| REVISIONS | | | | |
|---|---|---|---|---|
| ZONE | REV | DESCRIPTION | DATE | APPROVED |
| | | | | |
| | | | | |
| | | | | |

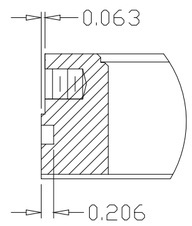


DETAIL A
SCALE - 3:1

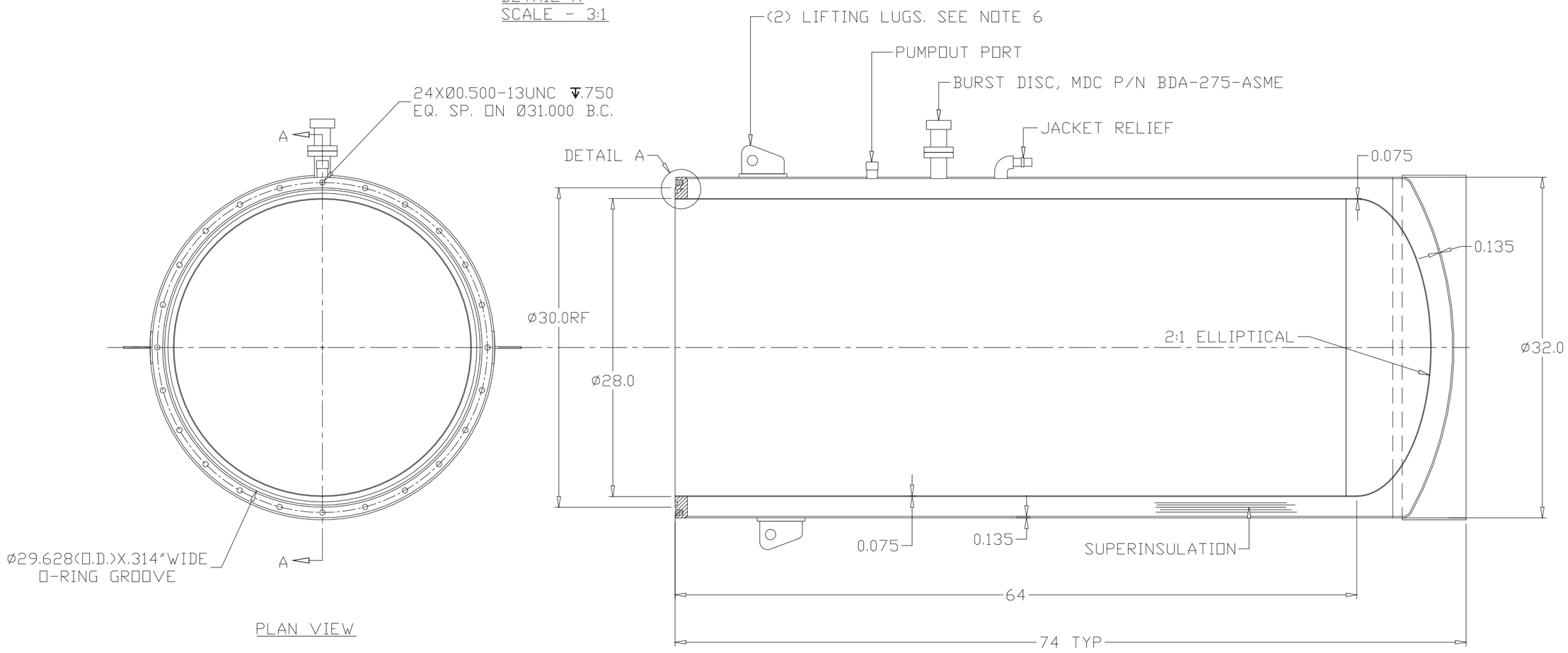


PLAN VIEW

A-A

NOTES:
1. DESIGN SPECIFICATION: ASME BPV CODE SEC VIII, DIV.1
2. DESIGN PRESSURE : 37 PSI
3. DESIGN TEMP. : -452°F TO 100°F
4. MAT'L : SA240 TYPE 304 S/S
5. LIQUID HELIUM SERVICE
6. FOR ILLUSTRATION PURPOSES ONLY. SEE PLAN VIEW FOR TRUE ORIENTATION.

THIS DRAWING CONTAINS PROPRIETARY INFORMATION WHICH MUST NOT BE DUPLICATED WITHOUT WRITTEN PERMISSION FROM CRYOFAB, INC.

STANDARD NOTES
UNLESS NOTED OTHERWISE
ALL DIMENSIONS ARE IN INCHES.
TOLERANCES ARE:
.X ± .030
.XX ± .010
.XXX ± .005
ANGLE± .5
BREAK ALL SHARP EDGES.

| | SIGNATURE | DATE |
|---|---|---|
| DRAWN | T.T. | 1/08/10 |
| CHECKED | | |
| APPROVED | | |

CRYOFAB
KENILWORTH, NJ 07033

CVSM-2864 MULTI-SHIELDED
MAGNET RESEARCH DEWAR

| SIZE | FSCM NO. | DWG NO. | REV |
|---|---|---|---|
| C | | | |
| SCALE 1:1 | | SHEET 1 OF 1 | |