Laser and Photocathode

Brian Sheehy LEReC review 8/13/2013

- Laser requirements
- Laser design approach
- Location and transport
- Photocathode

Laser Pulse Structure

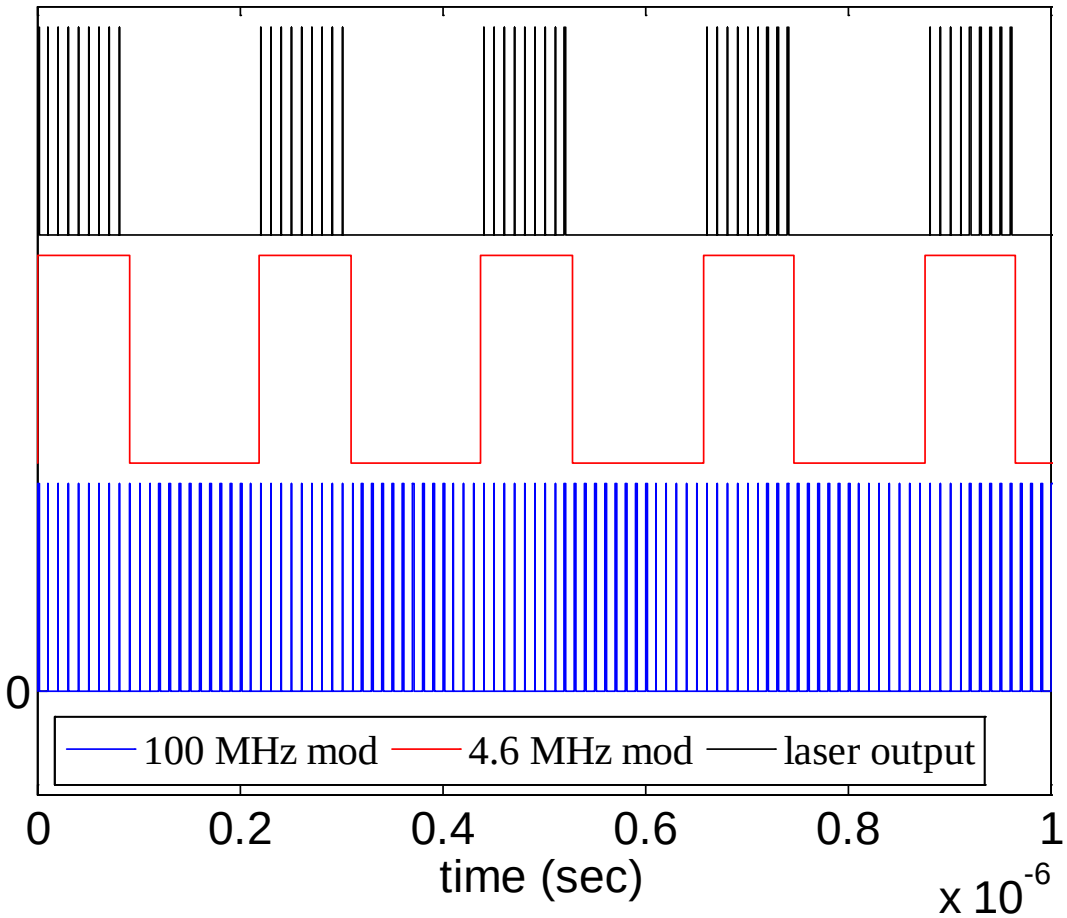

- Average macrobunch frequency is set at the 60th harmonic of the ring fundamental f_0
  - one macro gate per ion bunch
  - varies with ϒ: 4.55-4.67 MHz
  - 60-gate pattern phase-locked to f_0
- Microbunch frequency is *n*th harmonic of f_0 and equal to gun RF freq
  - *n* varies with ϒ: 1284 - 1319, for f_{rf} = 100 MHz ± 39 kHz
- this assures turn-by-turn stability
  - microbunch comb located differently in each bunch relative to bunch center, but does not shift turn-by-turn

- individual pulses are 750 psec FWHM, <150 psec rise and fall times
- for a QE of 5%, require E ~= 100 nJ on the cathode to produce 2 nC bunch charge
- 9 x 0.5 nC per macrobunch for γ = 4.1; 5 x 1.4 nC for γ = 10.7
  - average frequency 23 - 41 MHz, average power 1 – 1.5 W

Pulse structure parameters vs. beam energy parameter γ

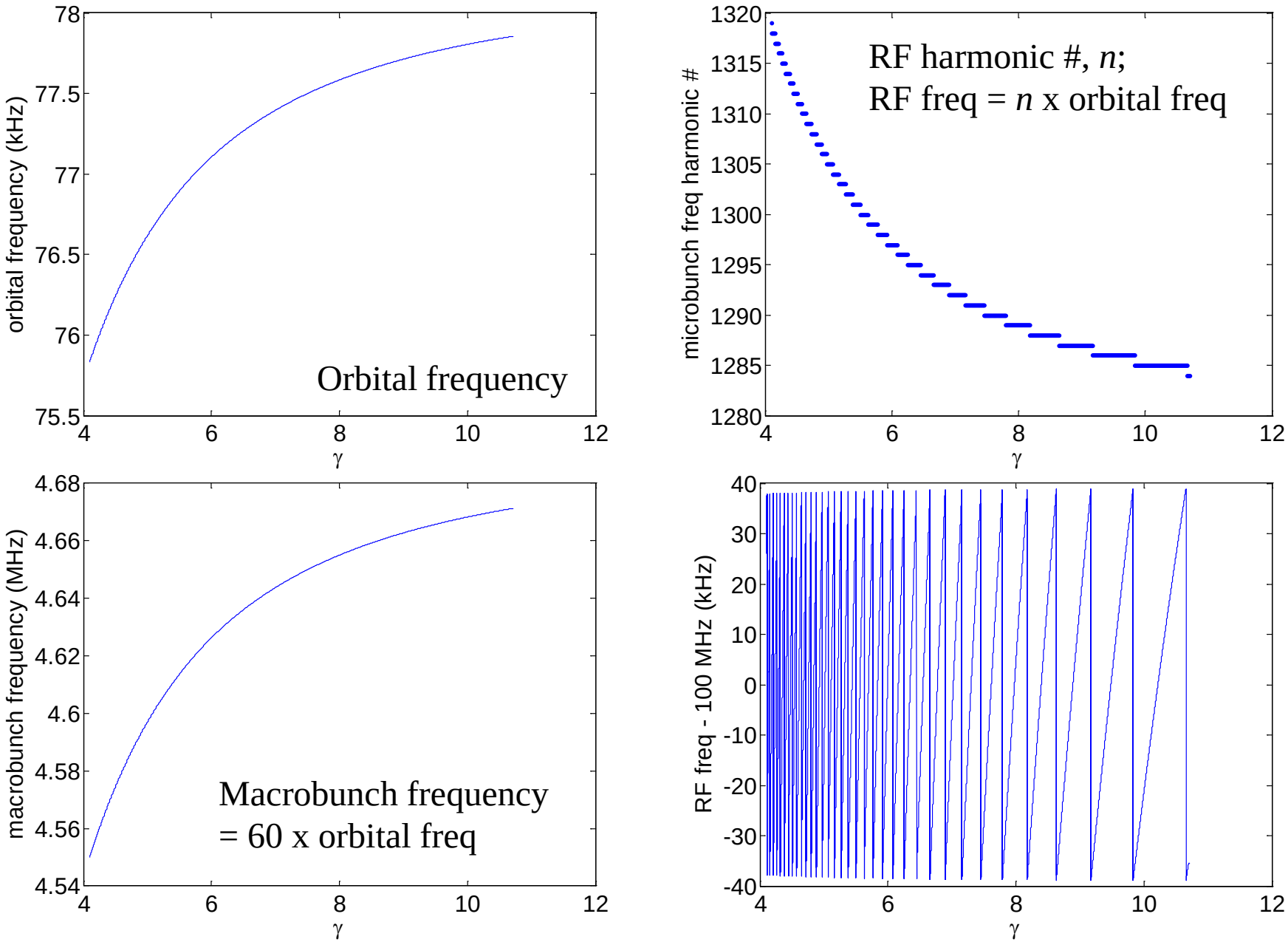

Laser Scheme

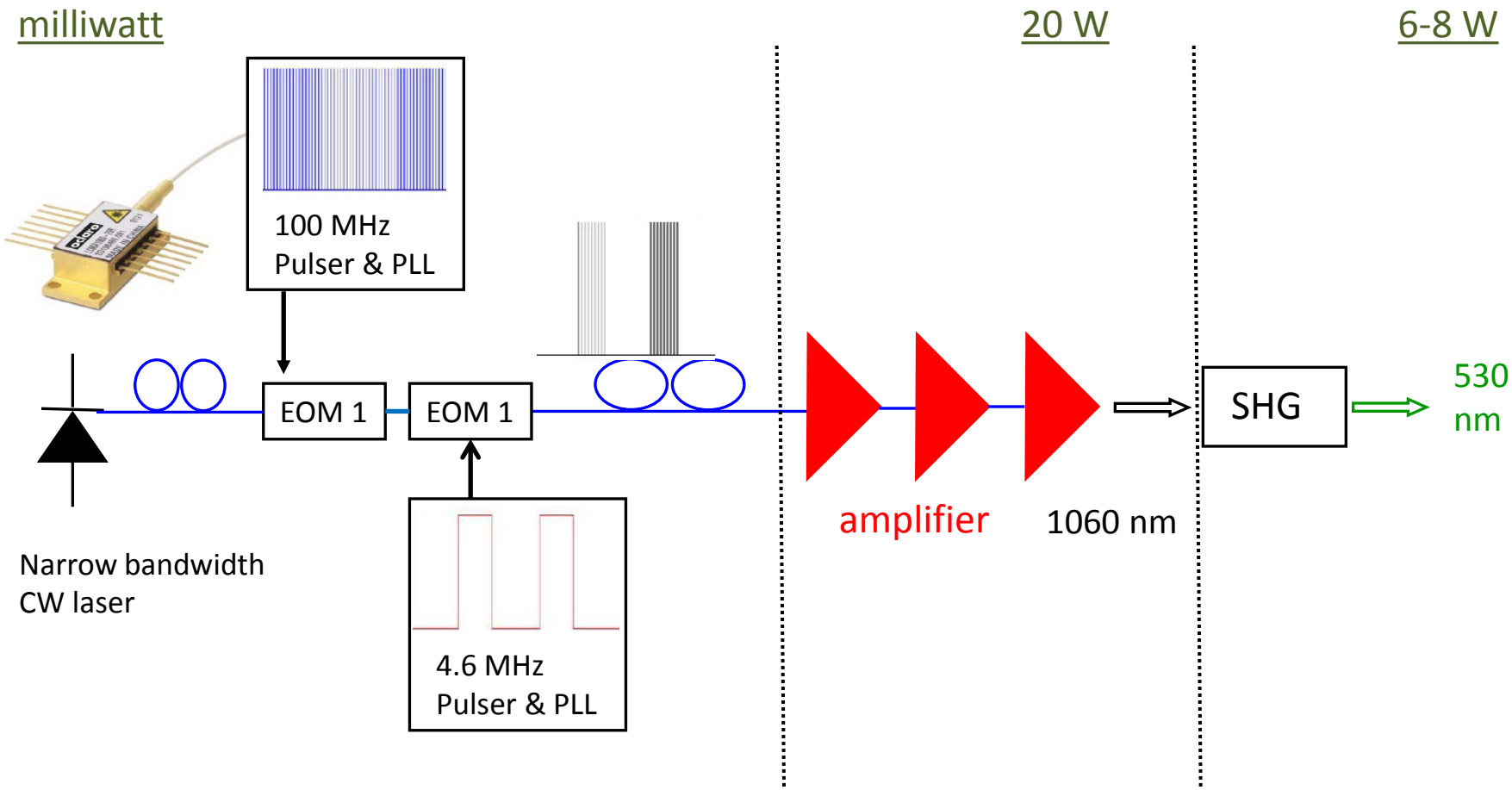

Optical Pulse Generator

Yb-doped Fiber Amplifier

Frequency Doubler (PPKTP or sPPLT)

EOM = Electro-optic modulator
PLL = phase-locked loop

Fiber coupling

Laser Scheme

- Front end is a narrowband CW laser, with 2-stage electro-optic modulation, at 2 harmonics of the ring frequency f_0, which depends on the beam energy.
  - ~ 4.6 MHz, or $60f_0$
  - ~100 MHz or nf_0, where n varies with beam energy over [1284, 1319]
    - constrained by SRF cavity tunability of ~ 100 kHz
  - 750 psec FWHM pulses <150 psec rise and fall times
- Multistage fiber amplifier to 20 W average power
  - peak power 1.2 kW
- Frequency double to 530 nm in PPKTP or MgO:sPPLT
- Fiber transport ~30 m from laser building to gun in ring enclosure
- Some open issues:
  - amplitude droop from head to tail of each macrobunch
    - Probably small, probably inconsequential for beam transport and cooling
    - need simulations
  - Need detailed designs of amplifier, doubler, and modulation drivers.

Transport

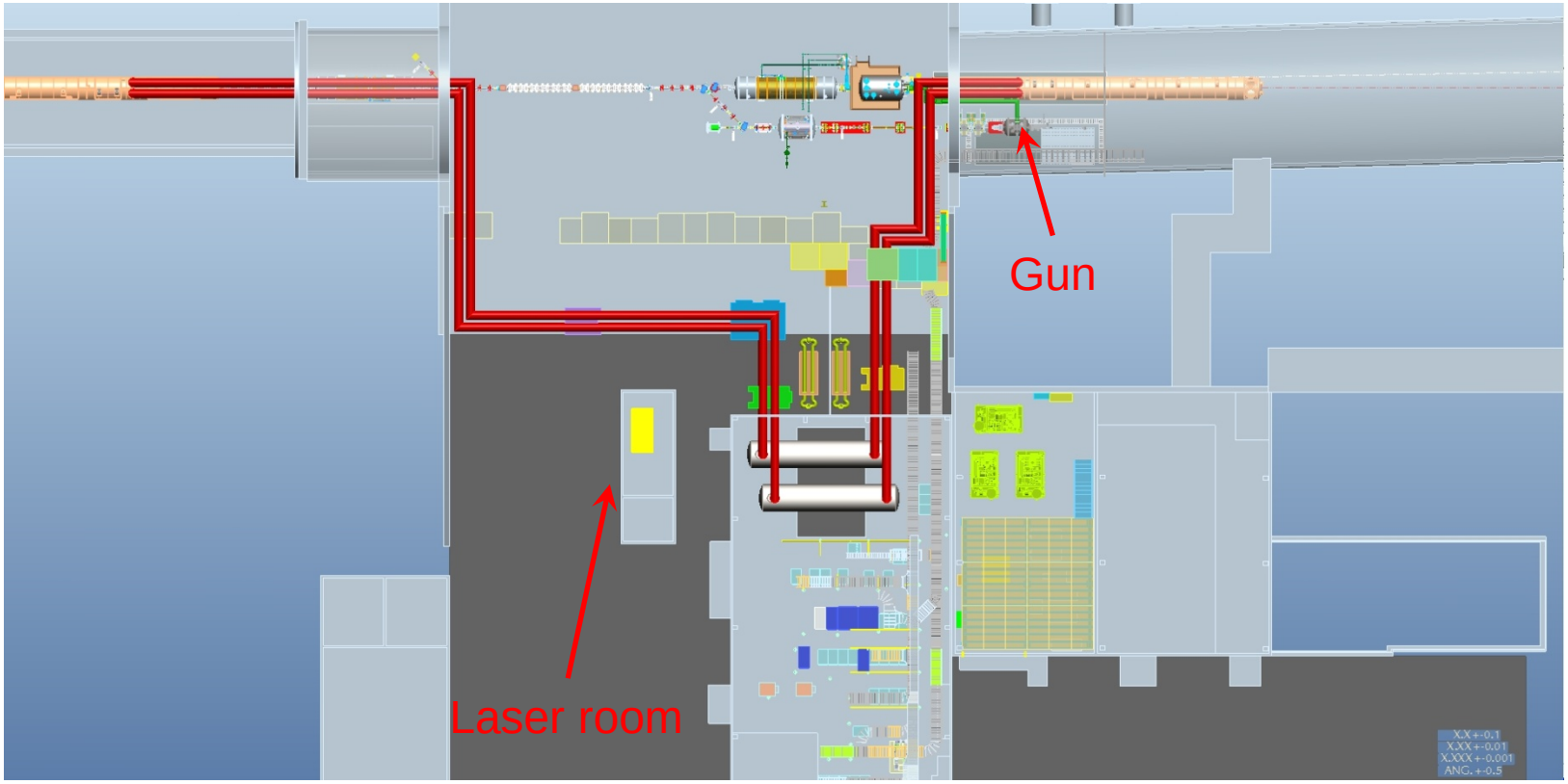

- Laser must be located outside of ring area
  - -will likely use the same modular building being used for Coherent electron cooling experiments
- ~ 30 meter path with multiple bends required. Fiber transport is best option

Transport

From Laser room

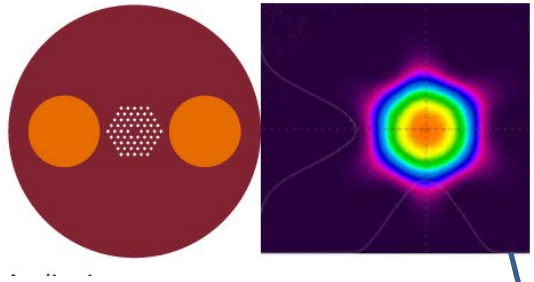

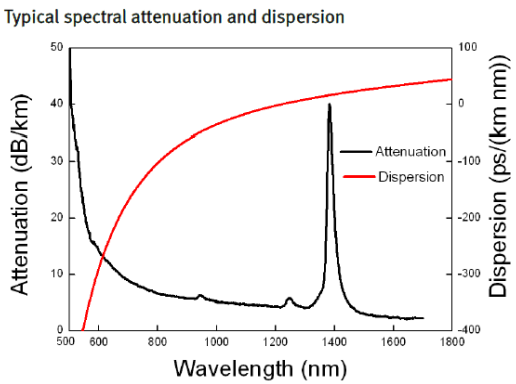

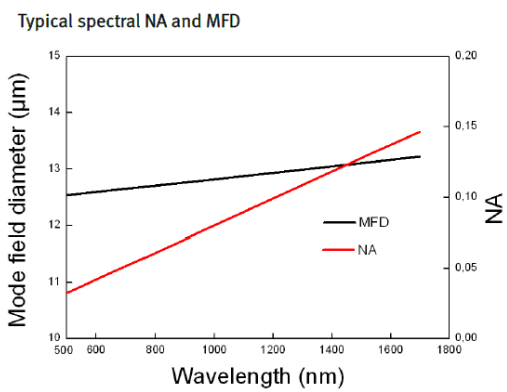

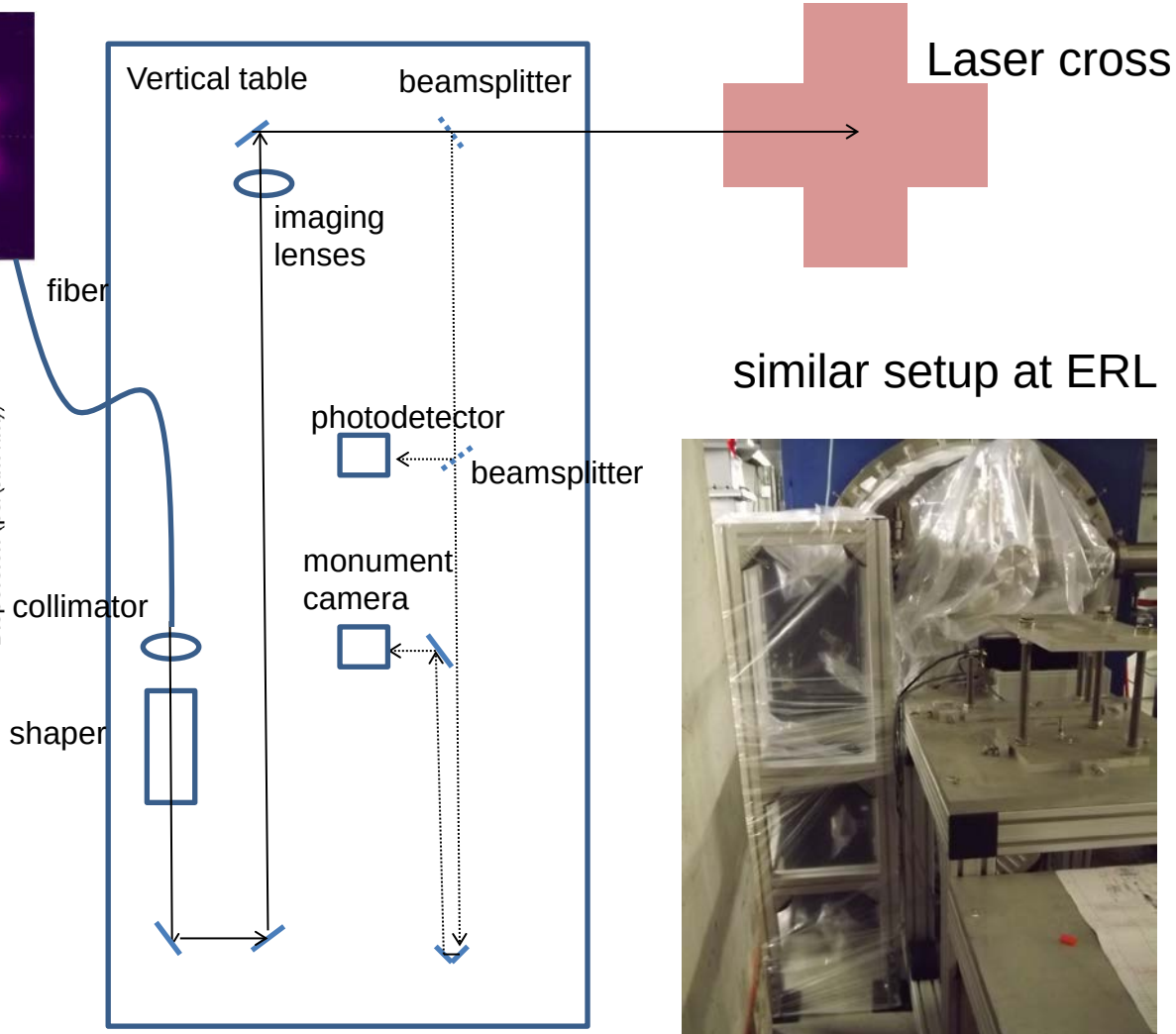

similar setup at ERL

- losses 25% over 30 m from laser room

Photocathode

- Cathode choice: multialkali
  - CsTe requires UV; Cs:GaAs too sensitive to vacuum
  - multialkali cathodes with QEs ~10% are becoming common
  - Some possibility of commercially available cathodes entering the field
- Fabricate and characterize high QE photocathodes in fabrication chamber
- Transfer cathodes via a load-lock under UHV conditions to gun chamber
- Store multiple cathodes locally and transfer to gun cavity as needed
  - Average current 20-30 mA
  - Compare 30 hour lifetime @ 60 mA measured at Cornell DC gun
  - Demonstrating cathode QE and lifetime in SRF gun part of CeC and ERL
- Reverse the process for cathode rejuvenation

Cathode loading system in CeC

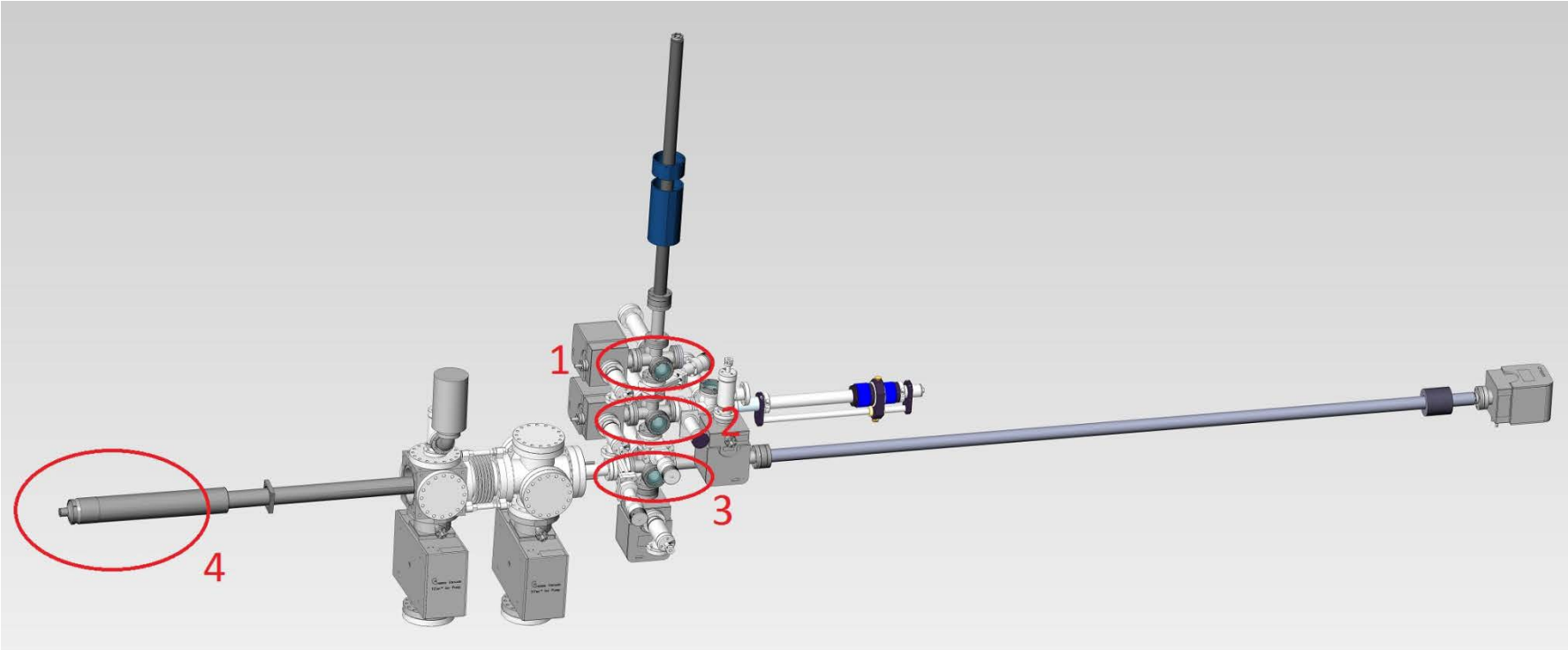

1. Instrumentation

2. Cathode load/unload/store

3. Attach puck to cathode stalk

4. Extend stalk to position cathode in gun

Instrumentation Cross (1)

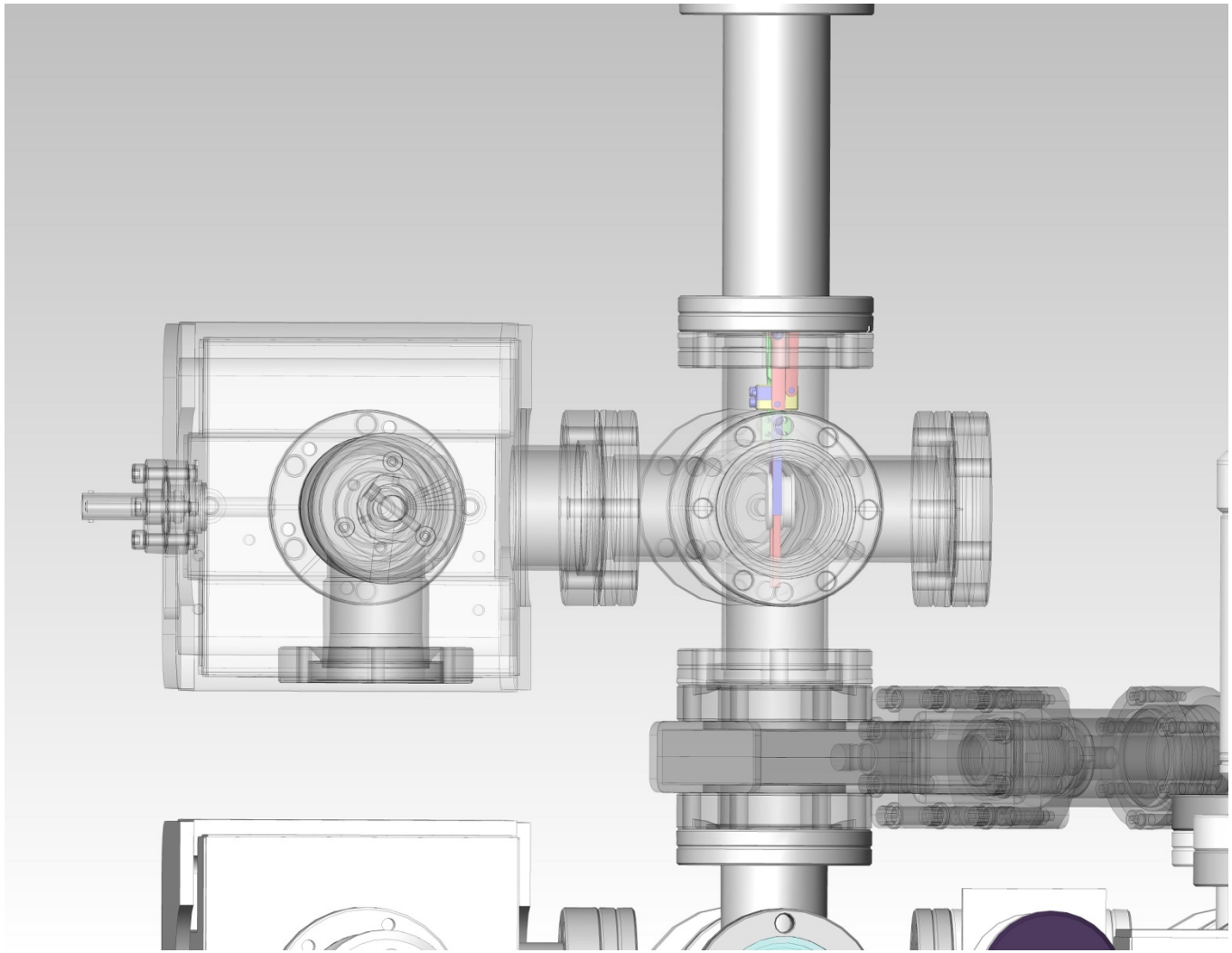

Load-Lock Transfer and Storage Cross (2)

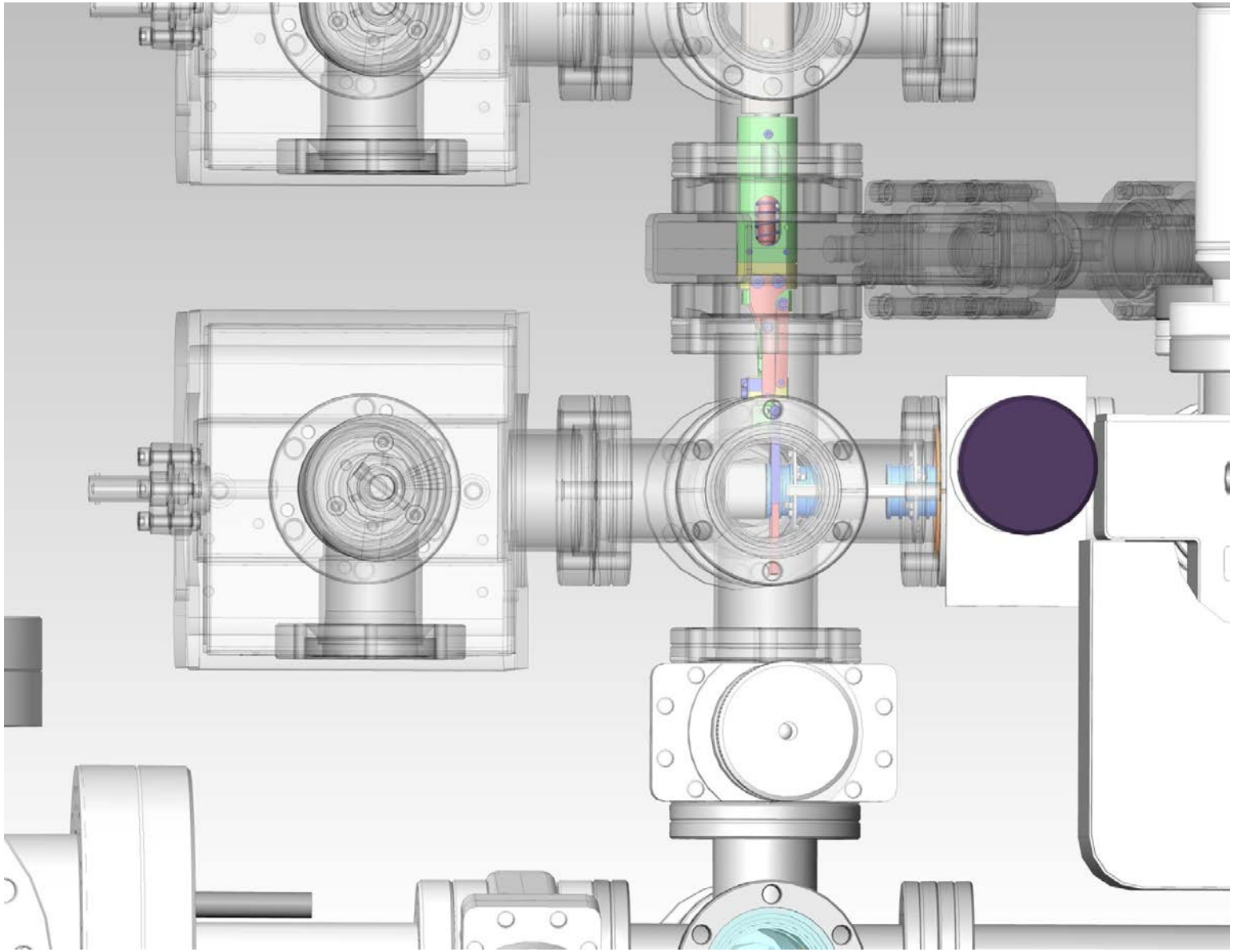

Mounting on Gun Stalk (cross 3)

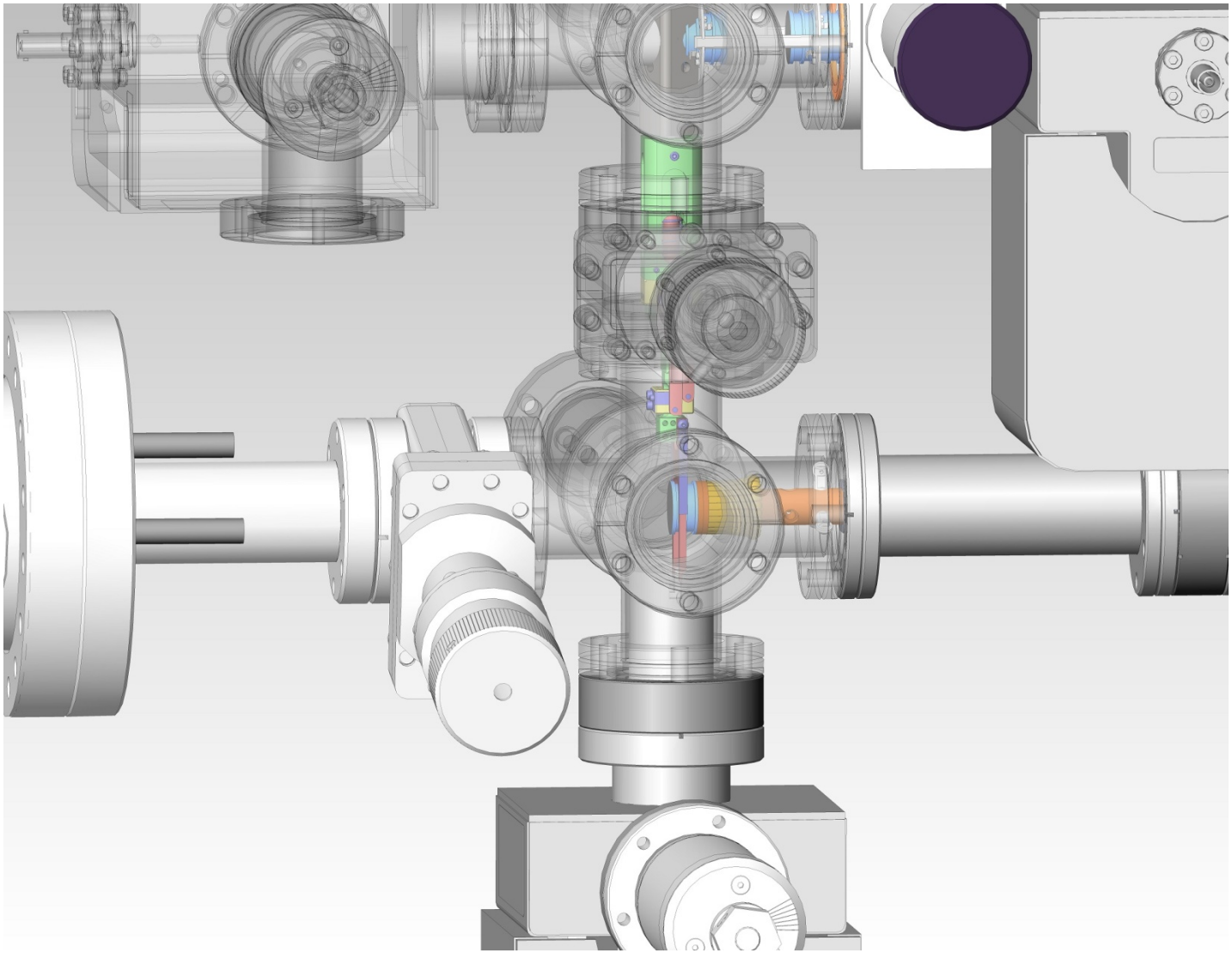

Cathode Puck

Front view

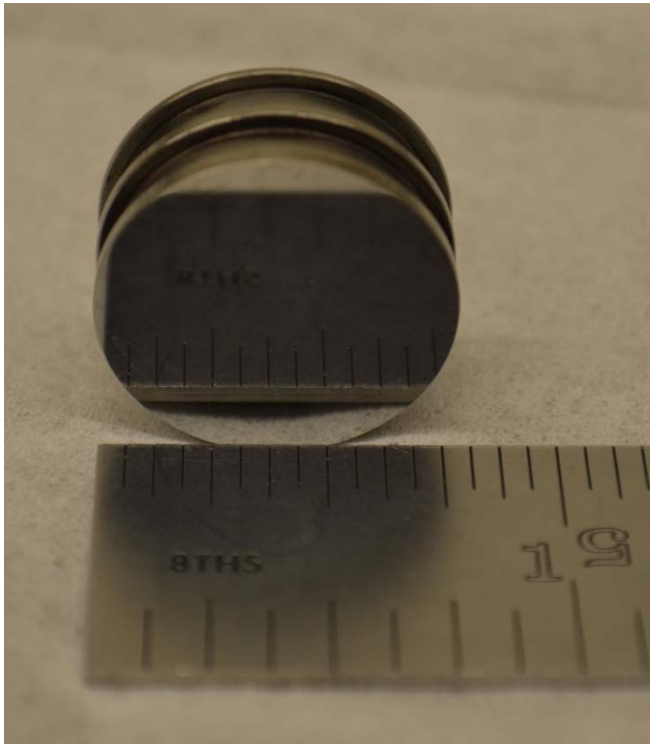

Back view

Side view

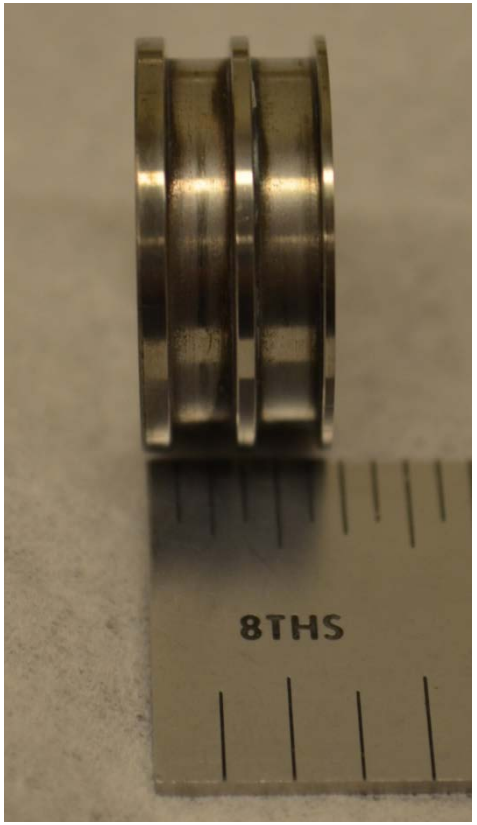

Cathode mounted on Stalk

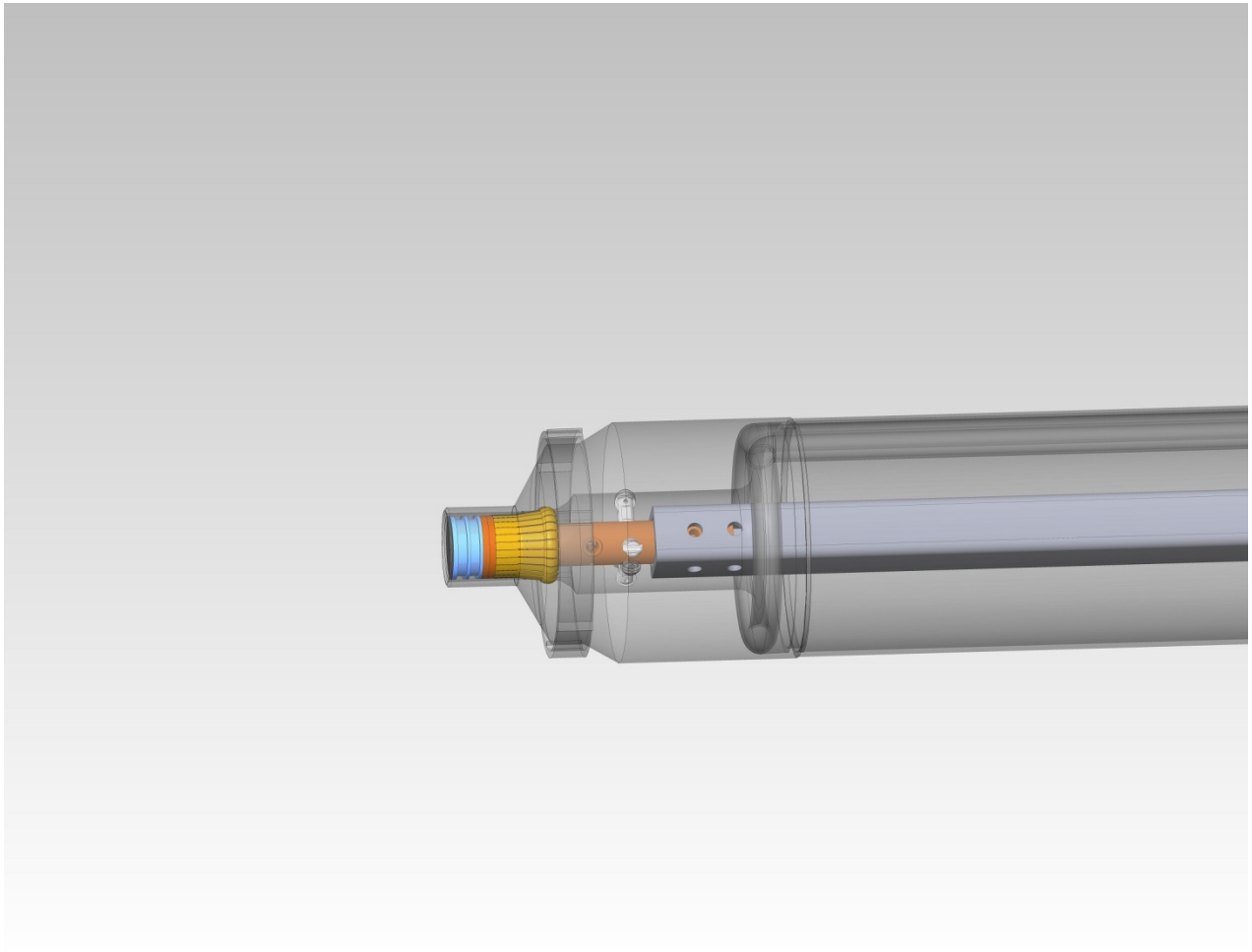

Fabrication and Transport System

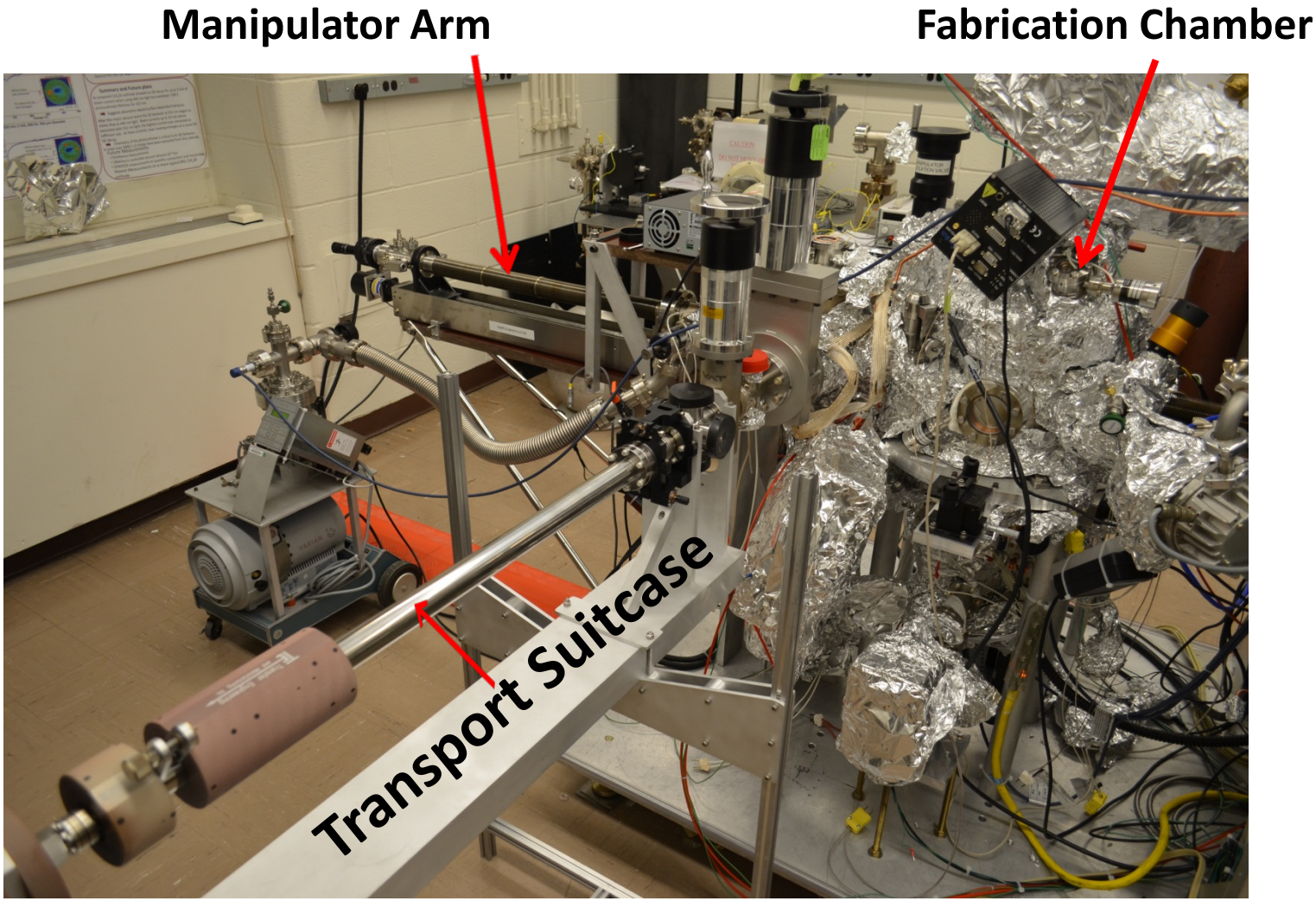

- Best QE produced to date in the green: 6%
- Development ongoing: system design, substrate, vacuum, homogeneity…

704MHz gun load lock system

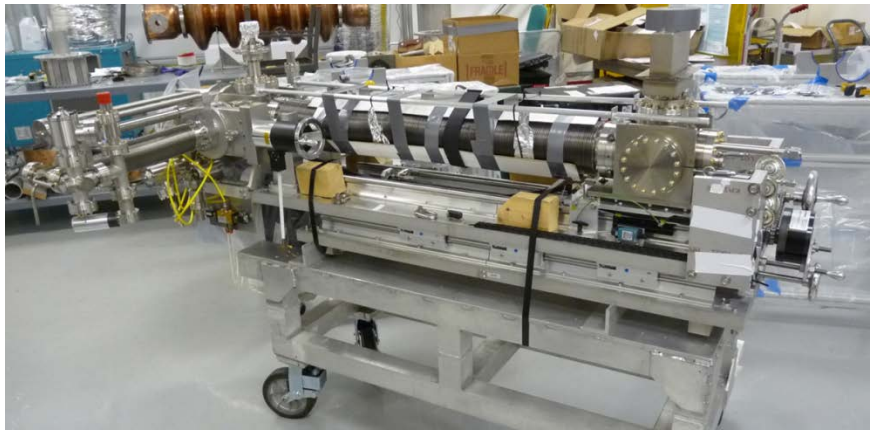

Load-lock transport cart was baked and ready get into the 704MHz gun.

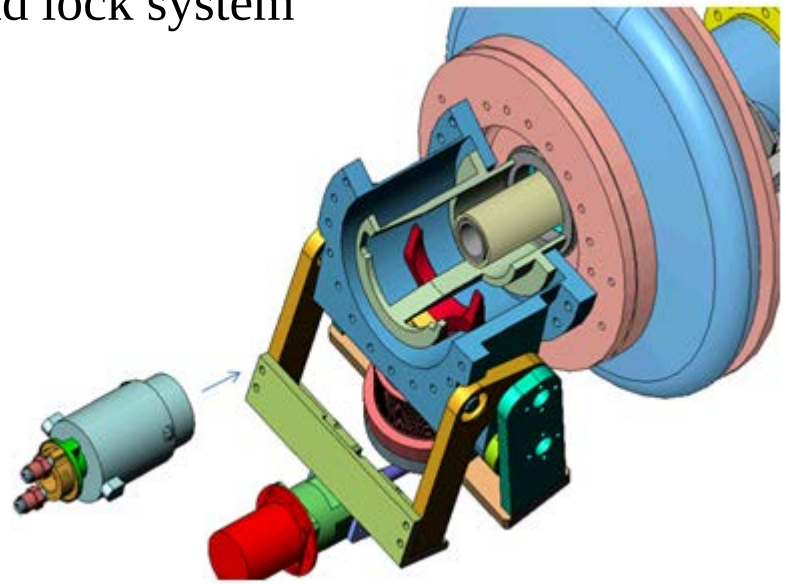

The scheme of the insertion of the stalk.

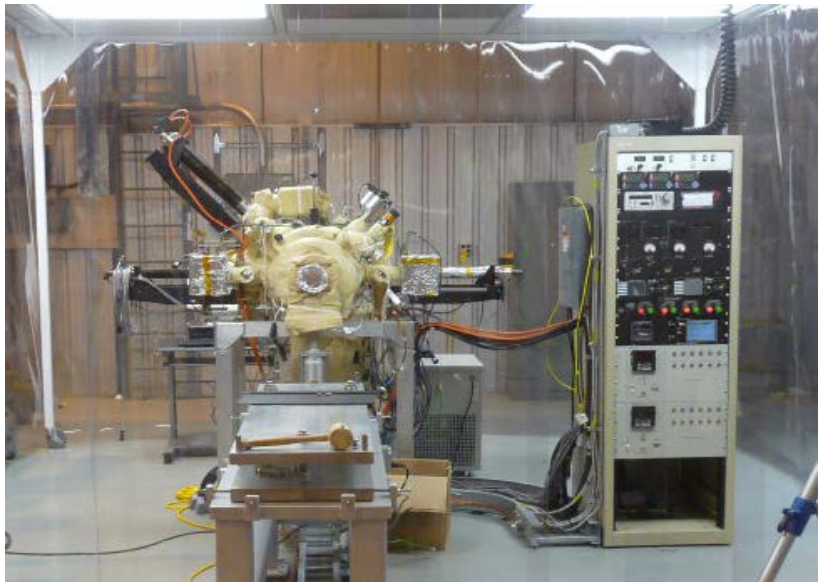

Deposition system in the clean room

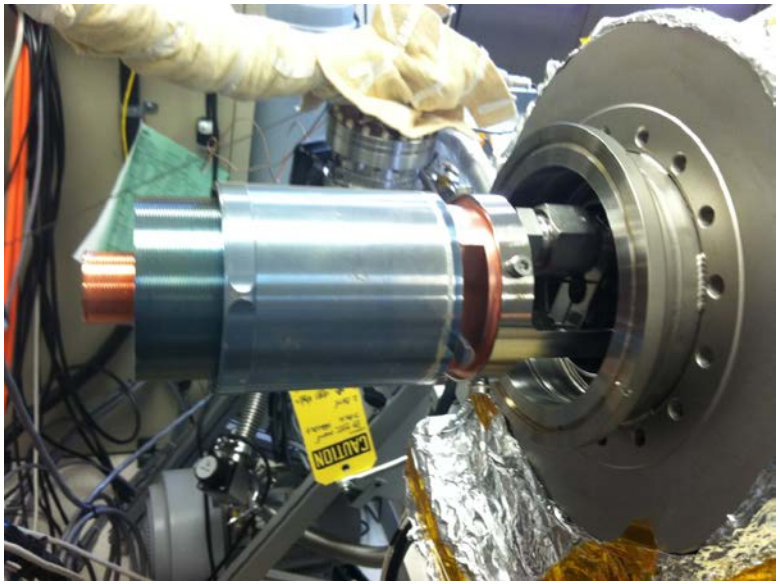

Cathode stalk mounted in the load-lock transport cart.

in-situ AFM on cathode growth at CFN

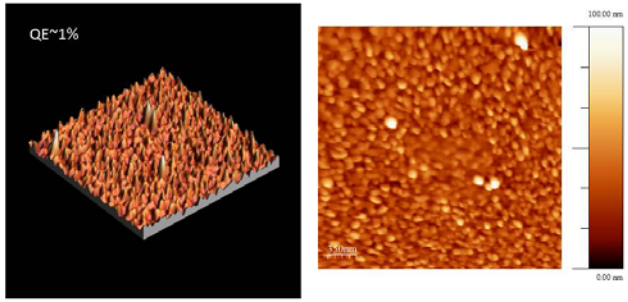

5 nm Antimony film evaporated at room temperature, Potassium and Cs added by monitoring QE

Should result in a 25 nm thick final film, but observed **11.5 nm** RMS roughness, with a 100 nm spatial period

This roughness may impact the emittance of the e beam

Comparison of Crystal structure and Final QE

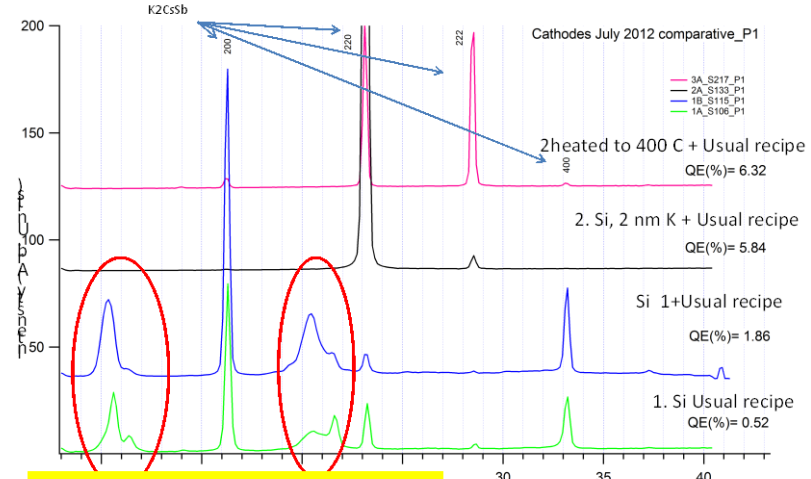

Crystal structure depends on growth process
High QE from cathodes predominantly K_2CsSb
Low QE cathodes have other components

K_2CsSb cathode fabrication recipe

Typical recipe:

- Molybdenum, Silicon or Stainless Steel Substrate
- Evaporate 200 Å layer of Sb with substrate 30-190 C
- Evaporate K at 140 C
- Evaporate Cs at 120-135 C, while monitoring QE at 532 nm
- Cathode QE at 532 nm is 6%, but falls to 4.5% during cool down
- Total time is ~1hr

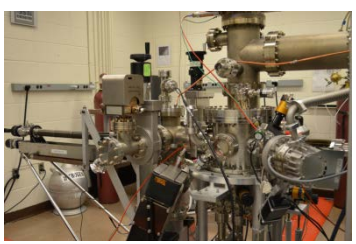

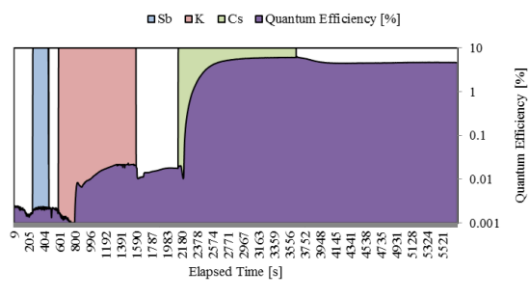

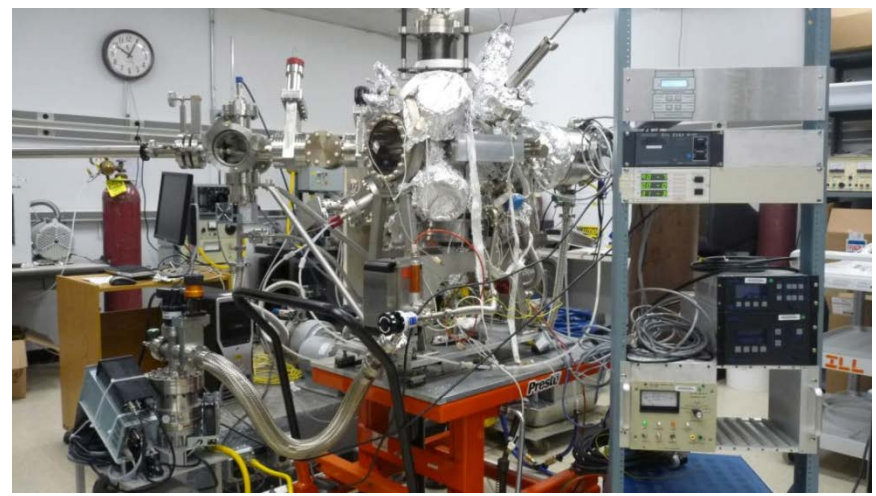

We have an extensive program with Instrumentation Division, using multiple deposition chambers, with synchrotron probes, electron microscopy, and AFM to study surface structure, composition and crystal structure as a function of cathode growth processes.

Summary

- Basic form of a feasible laser system for the project has been determined
  - Still need detailed designs for amplifier, frequency-doubler and RF modulation systems

- BNL's photocathode expertise continues to grow

- Experience with cathode transport in ERL and Coherent electron cooling experiments can be applied to LEReC.