| REVISIONS | | | | | | | |
|---|---|---|---|---|---|---|---|
| REV | ZONE | ECN NO. | DESCRIPTION | BY | DATE | CKR | APP |
| A | | | INITIAL RELEASE | CG | 12-29-99 | BA | WL |
| B | | MG1258 | REVISED PER ECO | CG | 3-5-00 | BA | WL |
| C | | MG1263 | REVISED PER ECO | CG | 6-19-00 | BA | WL |
| D | | MG1265 | REVISED PER ECO | CC | 11-5-00 | | |

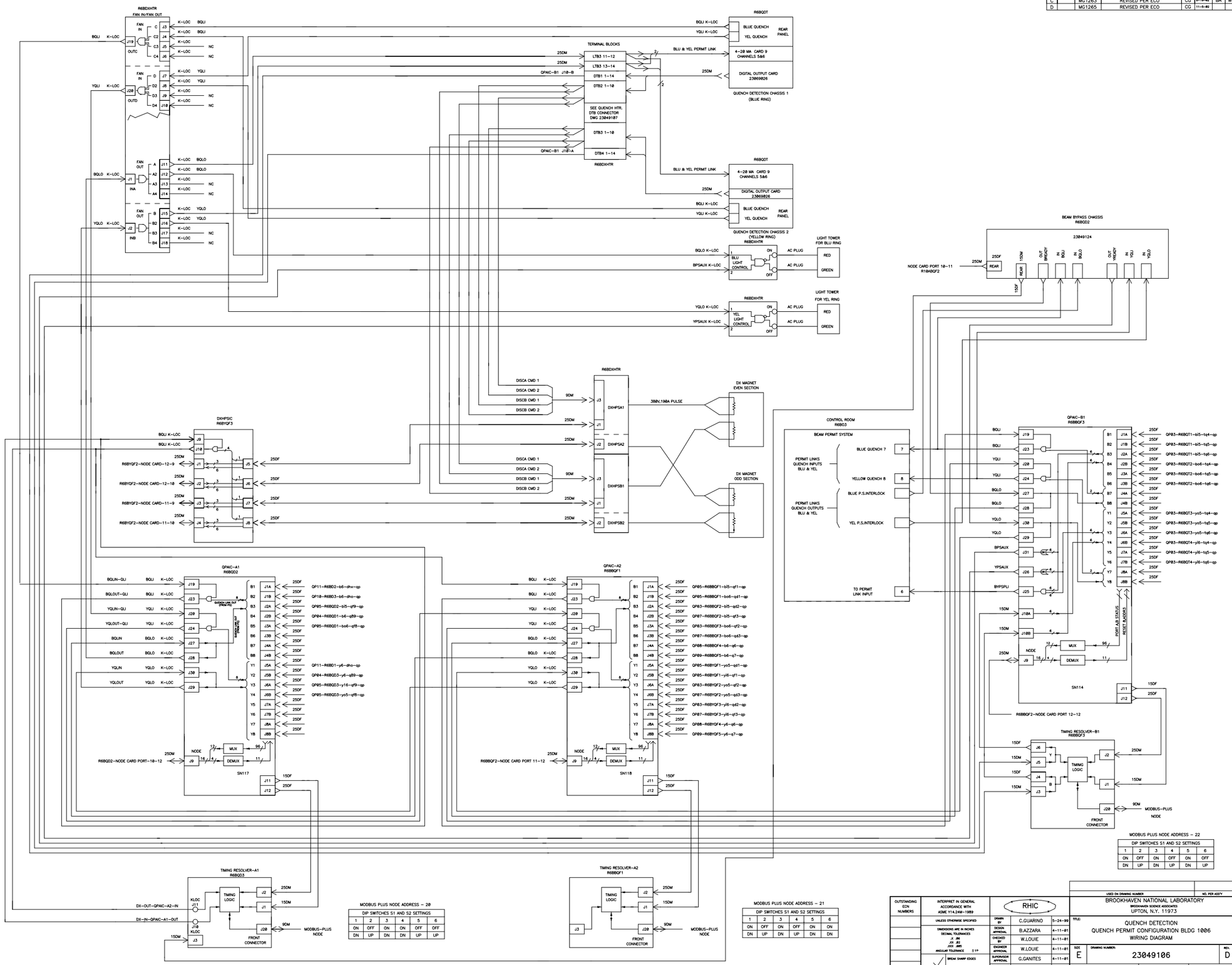


| OUTSTANDING ECN NUMBERS | INTERPRET IN GENERAL ACCORDANCE WITH ASME Y14.24M-1989 | RHIC | | |
|---|---|---|---|---|
| | UNLESS OTHERWISE SPECIFIED | DRAWN BY | C.GUARINO | 5-24-99 |
| | DIMENSIONS ARE IN INCHES DECIMAL TOLERANCES .X ±0 .XX ±.02 .XXX ±.005 | DESIGN APPROVAL | B.AZZARA | 4-11-01 |
| | ANGULAR TOLERANCE ±1° | CHECKED BY | W.LOUIE | 4-11-01 |
| | BREAK SHARP EDGES | ENGINEER APPROVAL | W.LOUIE | 4-11-01 |
| | FINISH MAT. MFR. | SUPERVISOR APPROVAL | G.GANITES | 4-11-01 |
| | | Q.A. APPROVAL | D.PASARELLA | 4-20-01 |

USED ON DRAWING NUMBER | NO. PER ASSY

BROOKHAVEN NATIONAL LABORATORY
BROOKHAVEN SCIENCE ASSOCIATES
UPTON, N.Y. 11973

TITLE: QUENCH DETECTION
QUENCH PERMIT CONFIGURATION BLDG 1006
WIRING DIAGRAM

SIZE: E | DRAWING NUMBER: 23049106 | REV: D
SCALE: NONE | WEIGHT: | SHEET 1 OF 1

DWG NO 23049106