REVISIONS							
REV	ZONE	ECN NO.	DESCRIPTION	BY	DATE	CKR	APP
A			INITIAL RELEASE	CG	12-20-99	BA	WL
B		MG1258	REVISED PER ECO	CG	3-2-02	BA	WL
C		MG1263	REVISED PER ECO	CG	5-30-02		

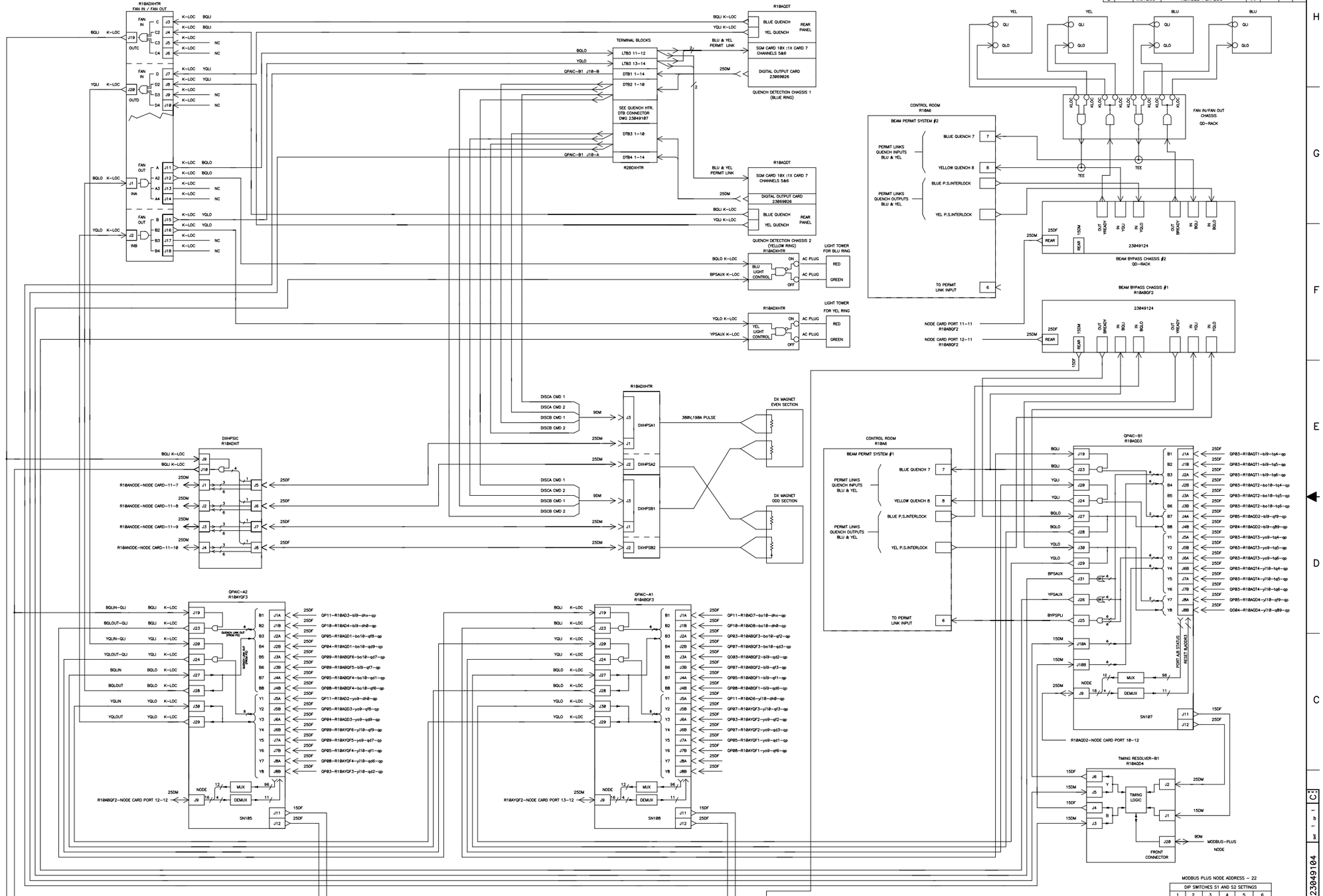

MODBUS PLUS NODE ADDRESS – 21

DIP SWITCHES S1 AND S2 SETTINGS					
1	2	3	4	5	6
ON	OFF	ON	OFF	ON	ON
ON	UP	ON	UP	ON	ON

MODBUS PLUS NODE ADDRESS – 20

DIP SWITCHES S1 AND S2 SETTINGS					
1	2	3	4	5	6
ON	OFF	ON	ON	OFF	OFF
ON	UP	ON	ON	UP	UP

MODBUS PLUS NODE ADDRESS – 22

DIP SWITCHES S1 AND S2 SETTINGS					
1	2	3	4	5	6
ON	OFF	ON	OFF	ON	OFF
ON	UP	ON	UP	ON	UP

OUTSTANDING ECN NUMBERS	INTERPRET IN GENERAL ACCORDANCE WITH ASME Y14.24M-1989	RHIC	DRAWN BY	C.GUARINO	5-20-99
	UNLESS OTHERWISE SPECIFIED		DESIGN APPROVAL	B.AZZARA	4-11-01
	DIMENSIONS ARE IN INCHES DECIMAL TOLERANCES .X ±.06 .XX ±.02 .XXX ±.005		CHECKED BY	W.LOUIE	4-11-01
	ANGULAR TOLERANCE ±1°		ENGINEER APPROVAL	W.LOUIE	4-11-01
	BREAK SHARP EDGES		SUPERVISOR APPROVAL	G.GANITES	4-20-01
	FINISH MAX. MIN.		S.A. APPROVAL	D.PASSARELLA	4-20-01

USED ON DRAWING NUMBER | NO. PER ASSY

BROOKHAVEN NATIONAL LABORATORY
BROOKHAVEN SCIENCE ASSOCIATES
UPTON, N.Y. 11973

TITLE: QUENCH DETECTION
QUENCH PERMIT CONFIGURATION BLDG 1010
WIRING DIAGRAM

SIZE: E | DRAWING NUMBER: 23049104 | REV. C

SCALE: NONE | WEIGHT: | SHEET 1 OF 1

DWG NO. 23049104 | SHEET 1 OF 1 | C-1