REVISIONS							
REV	ZONE	ECN NO.	DESCRIPTION	BY	DATE	CKR	APP
A			INITIAL RELEASE	CG	12-27-99	BA	WL
B		MG1258	REVISED PER ECO	CG	3-5-02	BA	WL
C		MG1263	REVISED PER ECO	CG	8-19-02		

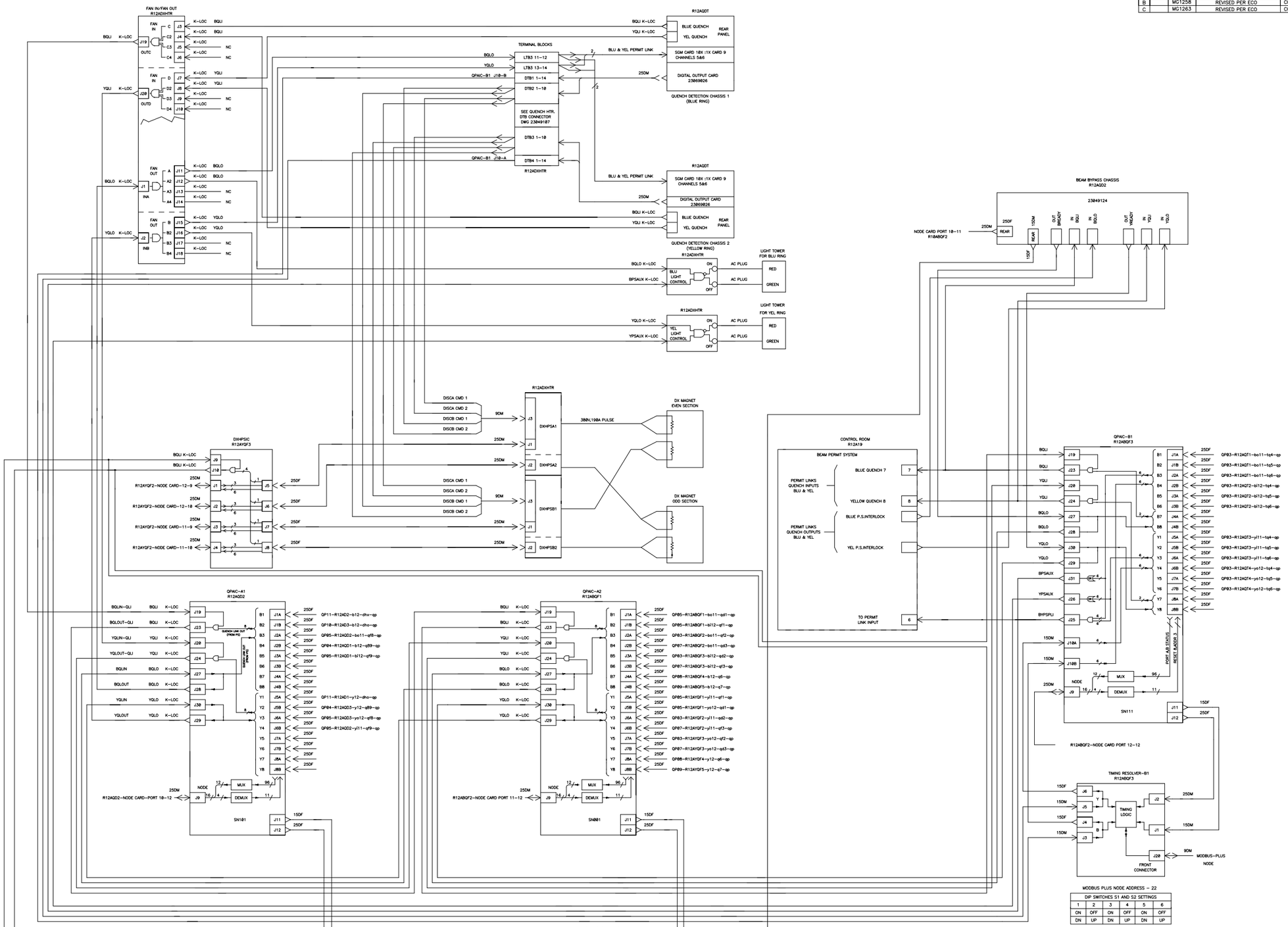

MODBUS PLUS NODE ADDRESS – 22

DIP SWITCHES S1 AND S2 SETTINGS					
1	2	3	4	5	6
ON	OFF	ON	OFF	ON	OFF
DN	UP	DN	UP	DN	UP

MODBUS PLUS NODE ADDRESS – 20

DIP SWITCHES S1 AND S2 SETTINGS					
1	2	3	4	5	6
ON	OFF	ON	ON	OFF	OFF
DN	UP	DN	DN	UP	UP

MODBUS PLUS NODE ADDRESS – 21

DIP SWITCHES S1 AND S2 SETTINGS					
1	2	3	4	5	6
ON	OFF	ON	OFF	ON	ON
DN	UP	DN	UP	DN	DN

OUTSTANDING ECN NUMBERS	INTERPRET IN GENERAL ACCORDANCE WITH ASME Y14.24M-1989	RHIC	DRAWN BY	C.GUARINO	4-30-99
	UNLESS OTHERWISE SPECIFIED		DESIGN APPROVAL	B.AZZARA	4-11-01
	DIMENSIONS ARE IN INCHES DECIMAL TOLERANCES .X ±.06 .XX ±.02 .XXX ±.005 ANGULAR TOLERANCE ±1°		CHECKED BY	W.LOUIE	4-11-01
			ENGINEER APPROVAL	W.LOUIE	4-11-01
	BREAK SHARP EDGES		SUPERVISOR APPROVAL	G.GANITES	4-11-01
	FINISH MAX. 125		Q.A. APPROVAL	D.PASARELLA	4-20-01

USED ON DRAWING NUMBER | NO. PER ASSY

BROOKHAVEN NATIONAL LABORATORY
BROOKHAVEN SCIENCE ASSOCIATES
UPTON, N.Y. 11973

TITLE: QUENCH DETECTION
QUENCH PERMIT CONFIGURATION BLDG 1012
WIRING DIAGRAM

SIZE: E | DRAWING NUMBER: 23049100 | REV. C

SCALE: NONE | WEIGHT: | SHEET 8F 1

DWG NO 23049100 | sht 1 of 1 | C