Superconducting Accelerator and Electron Cooling R&D

Ilan Ben-Zvi*, for the Superconducting Accelerator and Electron Cooling group,

Collider-Accelerator Department

Brookhaven National Laboratory

(*) Also Center for Accelerator Science and Education

Stony Brook University

SCA & EC Group activities

- Establishment of SRF infrastructure
- Polarized electron guns
  - SRF polarized electron gun
  - DC polarized electron gun
- eRHIC R&D: Energy Recovery Linac
  - Electron guns (including cavities, photocathodes, laser)
  - ERL accelerating cavities at 704 MHz (eRHIC, SPL, ESS)
  - The R&D ERL
- RHIC SRF cavities
  - 56 MHz store cavity
  - 28 MHz accelerating cavity
- Electron cooling
  - Low Energy RHIC electron cooling
  - Coherent electron cooling for RHIC and eRHIC

Facilities for the future of SRF@BNL: Niobium chemistry

- Cutting edge technology, large cavity capability

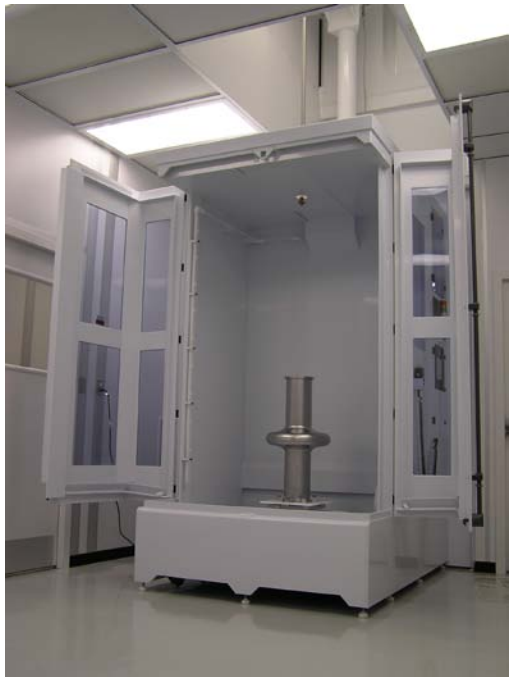

Facilities for the future of SRF@BNL: Clean room, furnace

Complements chemistry facility. Necessary for the assembly of particulate-free vacuum components and SRF cavities.

Facilities for the future of SRF@BNL: Vertical Test Facility

- Test facility to complement the chemistry facility

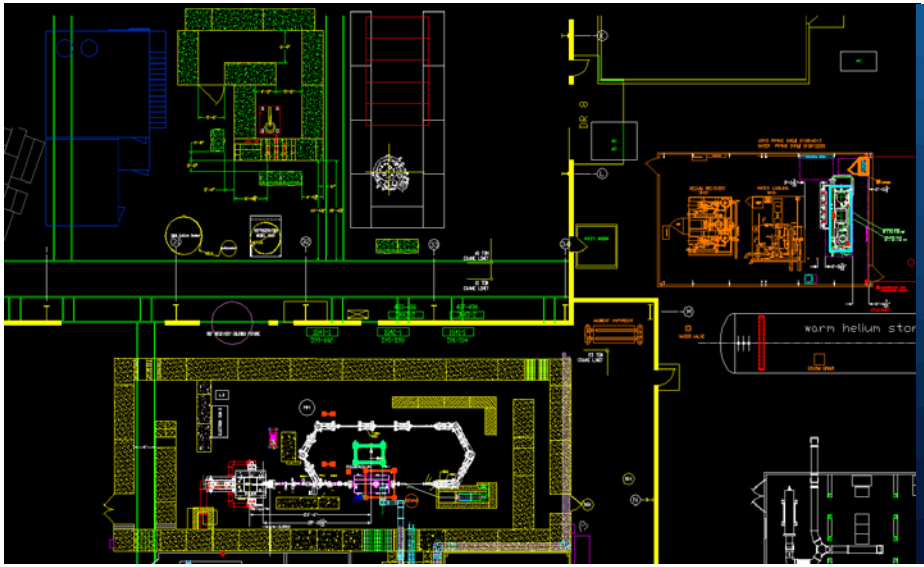

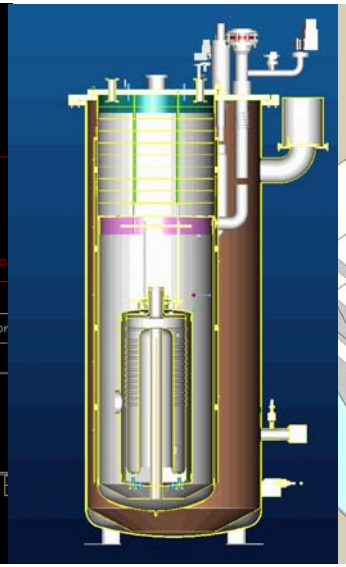

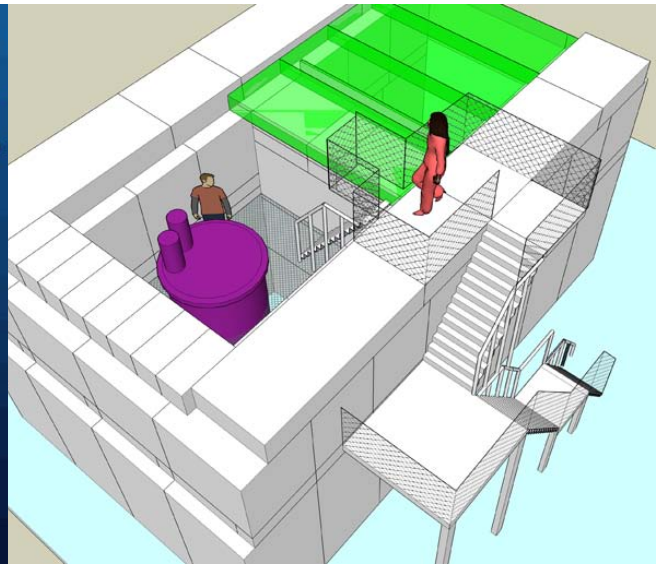

- Dewar 38” diameter 96” working depth RF systems from 56 – 1300 MHz
- LHe refrigerator with 360 W capacity, 1000 gallon storage Dewar
- Liquid ring pump for operation to 1.8K

SRF Polarized Electron Gun

- Challenge: Nobody ever got good lifetime for GaAs:Cs in an RF gun.
- Promise: Compact, cost effective polarized electron source.
- Subject of ongoing LDRD.

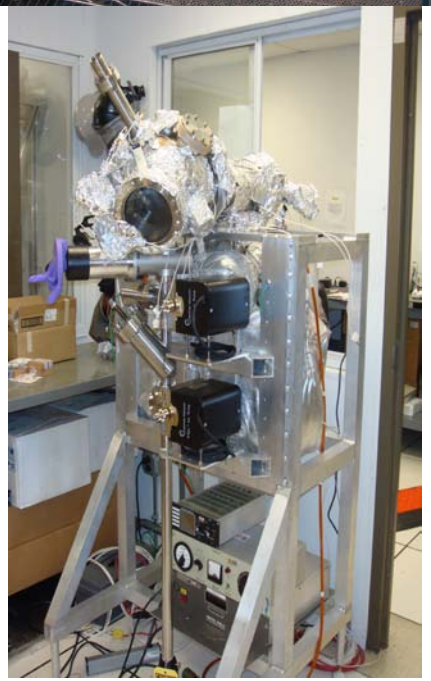

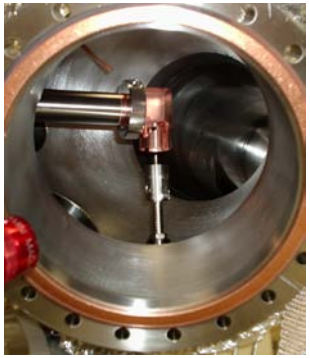

“Gatling Gun” MeRHIC Polarized Gun
(Idea - V. Litvinenko)

- A “safe” approach is to assume currently demonstrated performance (~2 MA) per cathode, and funnel beams from multiple cathodes.
- This is a subject of a LDRD proposal to the eRHIC Strategic Initiative.

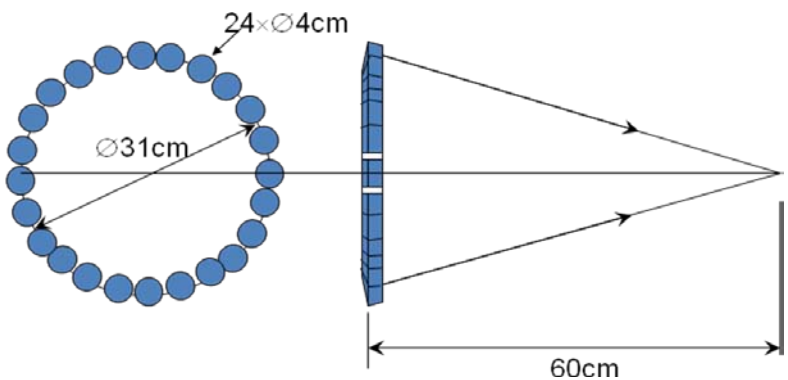

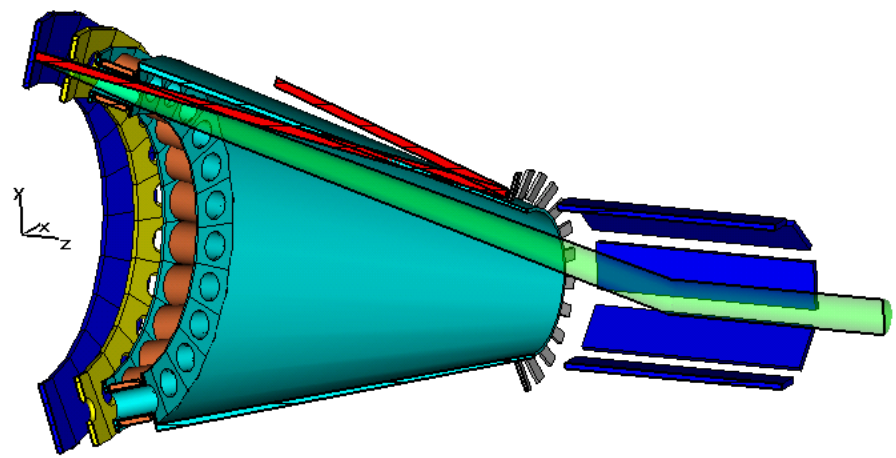

Multi-alkaline Photocathode Preparation

3rd Gen Deposition System

- 2 transporter carts delivered
- Base pressure 1×10^{-10} Torr
- System designed to eliminate cross contamination of sources
- Provides for quicker source exchange

Transporter cart

- 2 UHV systems with LN_2 cooling capability
- Baking to improve vacuum

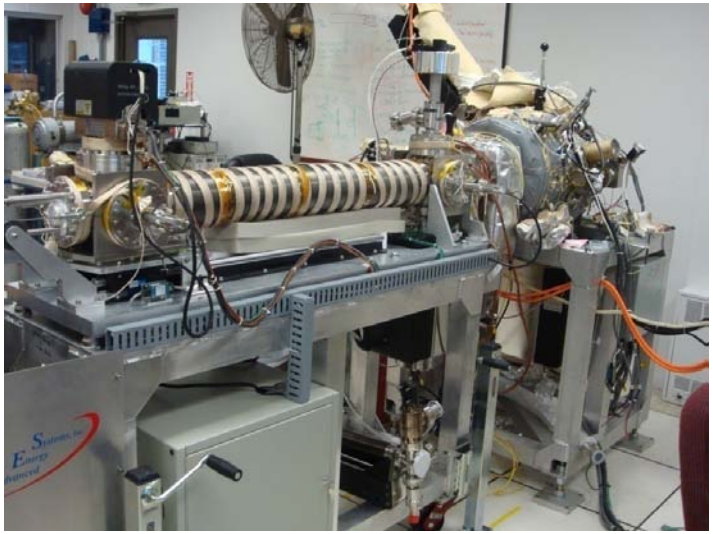

Diamond Amplified Photocathode

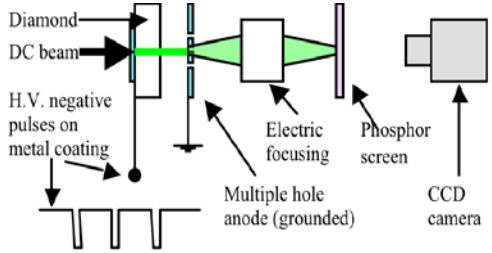

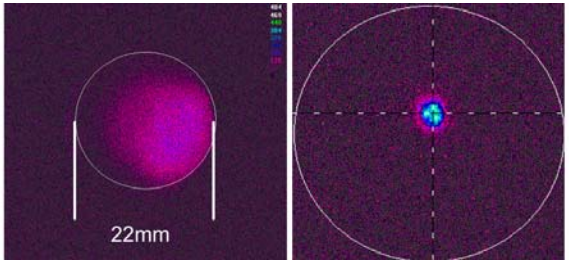

Unfocused Focused

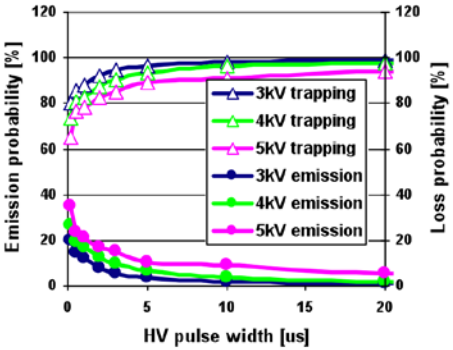

Emission

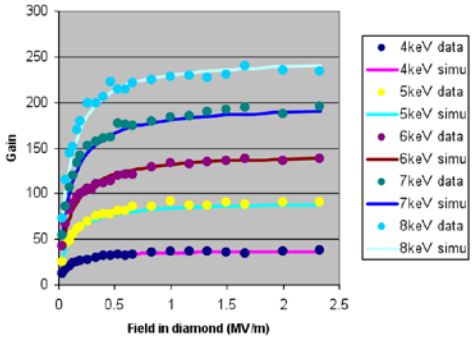

Transmission

- The Diamond Amplified Photocathode increases the effective quantum efficiency by orders of magnitude.
- Path to high-current photocathodes with low laser power
- Good thermal emittance
- Other applications

High-current SRF electron-gun

- ½ Cell SRF injector
  - Demountable cathode stalk
  - HTS Solenoid
- UHV load-lock cathode
- MW twin couplers

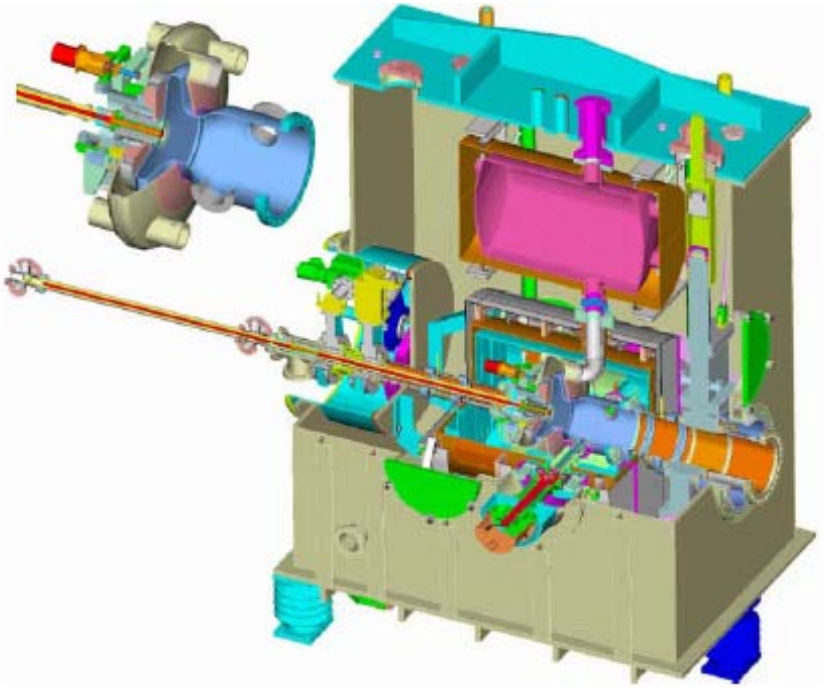

112 MHz SRF gun

- 112 MHz gun, motivated by a low-energy electron cooling option
- Funded by Phase II SBIR to Niowave, Inc.
- Approaching completion

Frequency (MHz)	112.5978
Vo (MeV, β =<0.98>)	2.7
Ecathode (MV/m)	19.67
Eo (MV/m)	28.28
Epeak (MV/m)	51.29
Bpeak (mT)	97.83
Bp/Ep (mT/(MV/m))	1.91
Pd (W)	16.55
Q	3.48E+09
G (Ohm)	38.25
R/Q (Ohm)	126.77
TTF	0.99

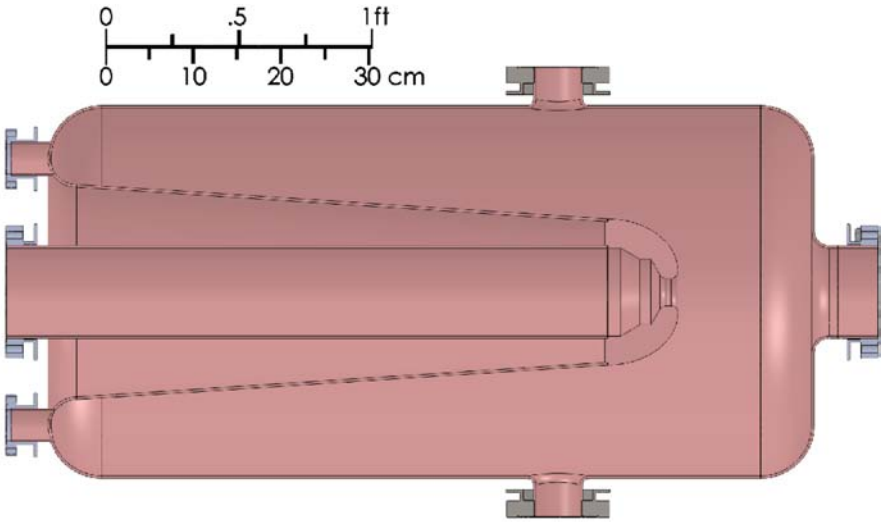

A Prototype eRHIC Cavity

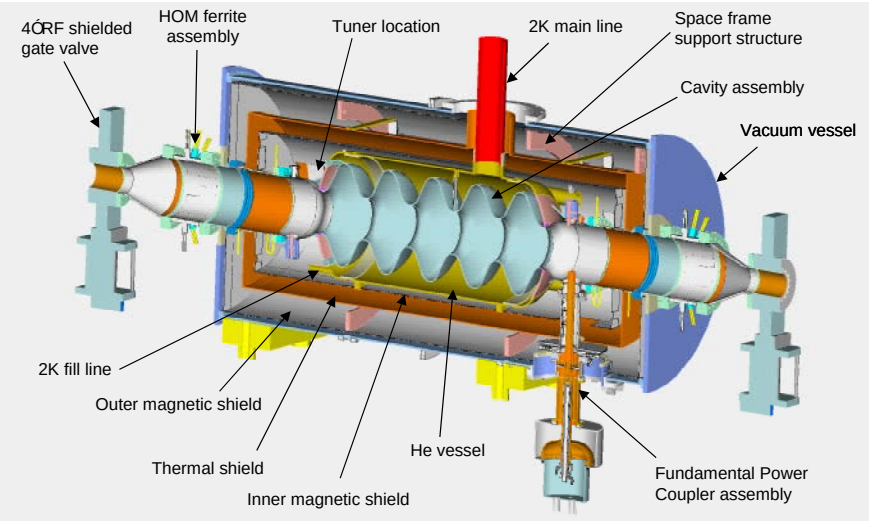

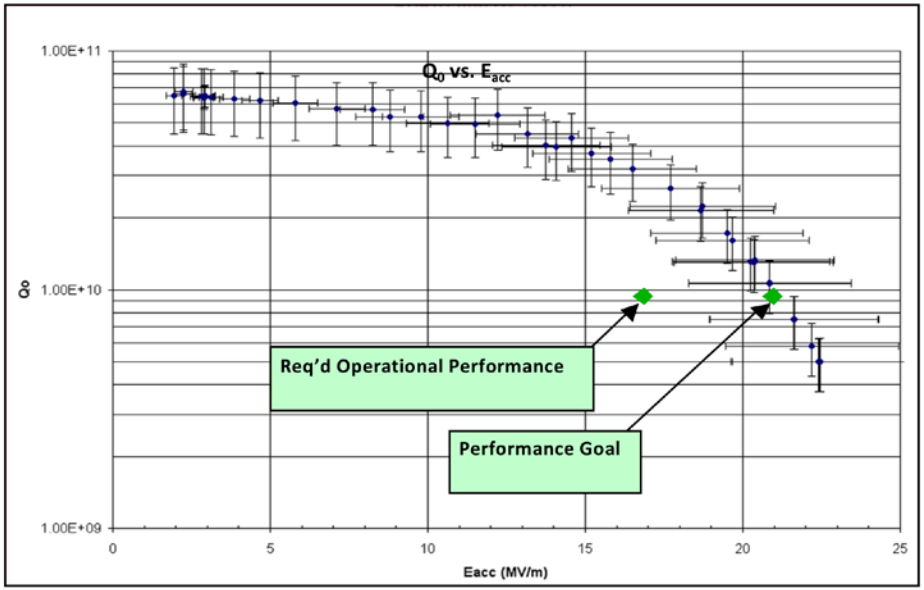

eRHIC New Cavity Design
(R. Calaga)

- Reduce peak surface magnetic field.
- Reduce stiffness.
- Apply new ideas in HOM damping.
- Reduce ration of evanescent fundamental to propagating HOM in beam tubes.
- Increase real-estate gradient

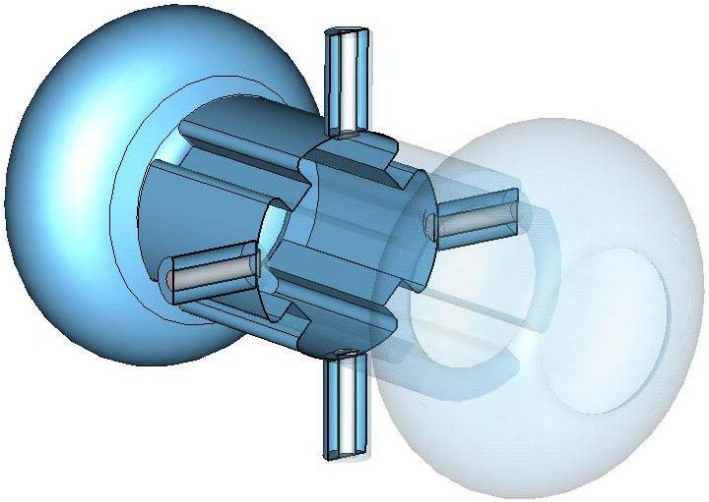

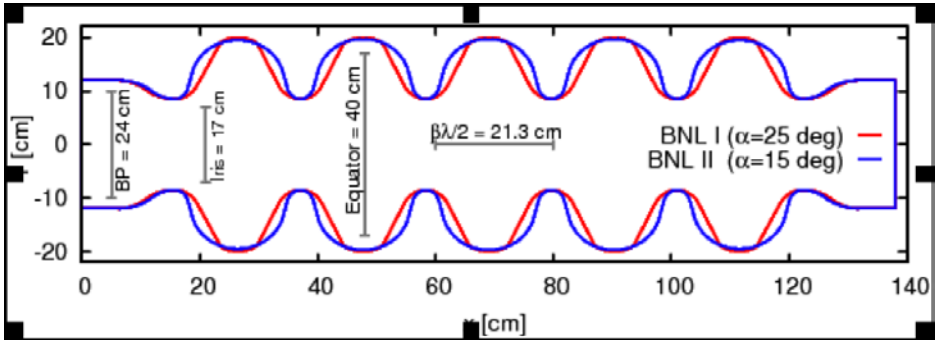

Also supported by a large DOE HEP grant through Stony Brook CASE

Measurements on copper models
(Harald Hahn, others)

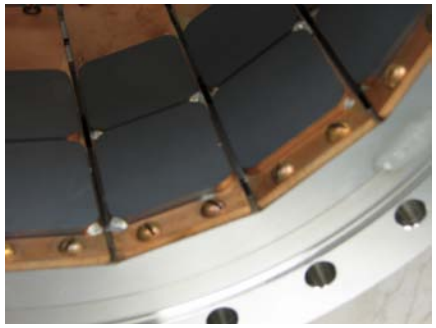

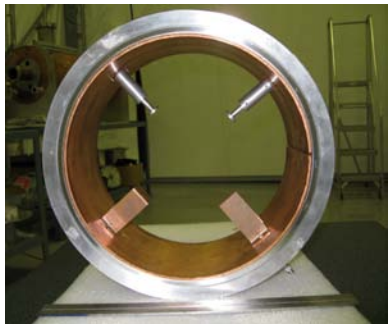

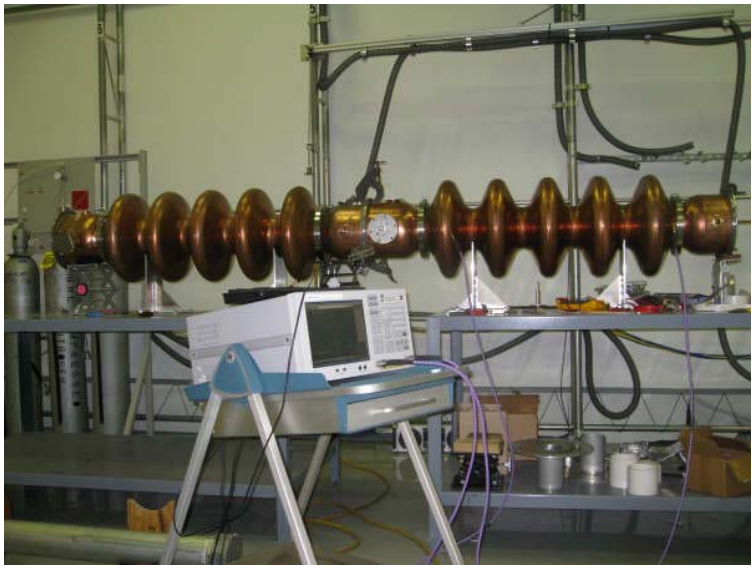

In the BNL 704 MHz design:
•HOMs couple to the beam tube.
•The fundamental is attenuated in the tube.
Result: Preferential HOMs damping.
In BNL I, damping is done with ferrites.
For BNL II, we are considering pick-up probes in the beam tube.
Expected result: Compact, simple HOM damping.

56 MHz cavity for RHIC

- AIP Project
  - Single cavity for both rings
  - Luminosity gain (also Low energy RHIC)
  - Adiabatic rebucketing
  - Reduction of vertex size
- Status:
  - Physics done
  - Cavity engineering done
  - Procurement to begin
  - Delays in coupler engineering

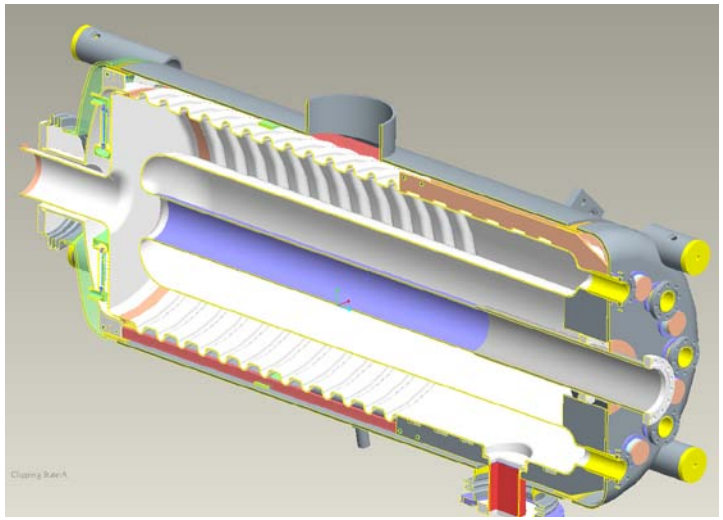

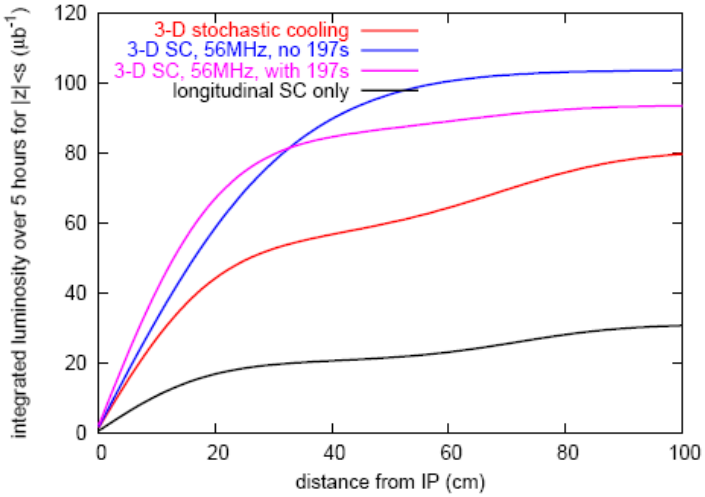

28 MHz accelerating cavity for RHIC

- Niowave, Inc. Phase I SBIR
- Motivation:
  - Higher voltage
  - Large voltage range
  - Reduce power dissipation

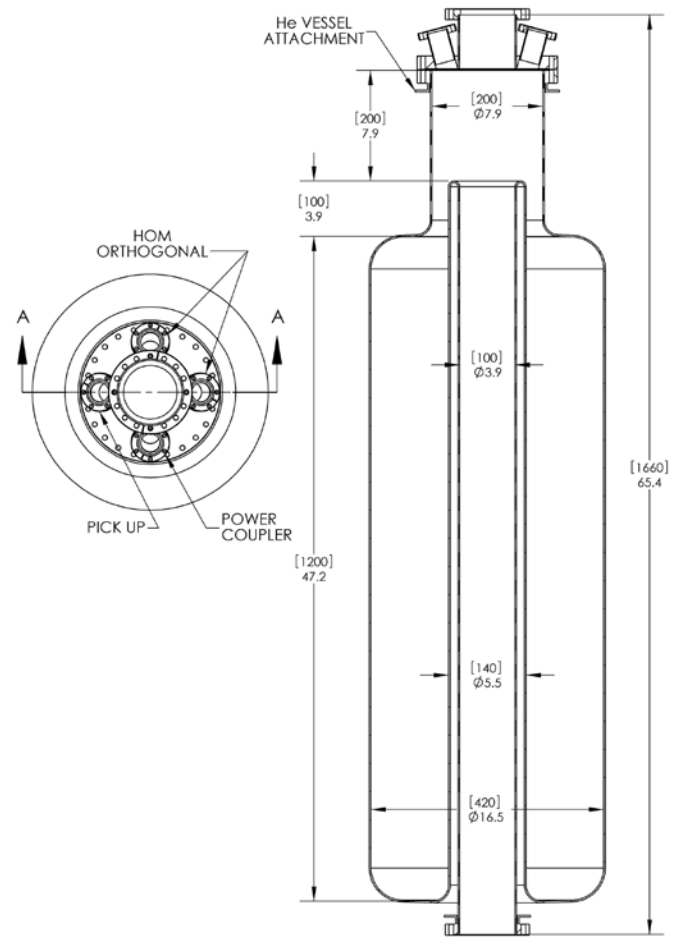

Frequency	28.1 MHz
Gap Voltage	600 kV
Operating gap voltage range (Minimum to Maximum)	TBD to 600 kV
R/Q	80 Ohms
Q	10^9
Epeak	<30 MV/m
Bpeak	<60 mT
Pcavity	5 W

Coherent Electron Cooling

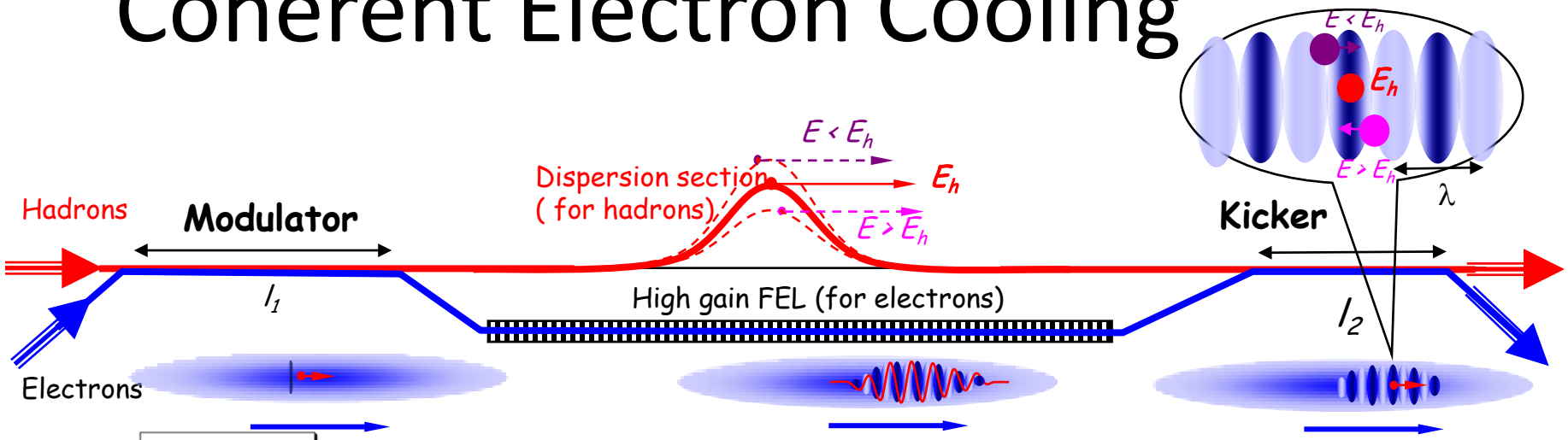

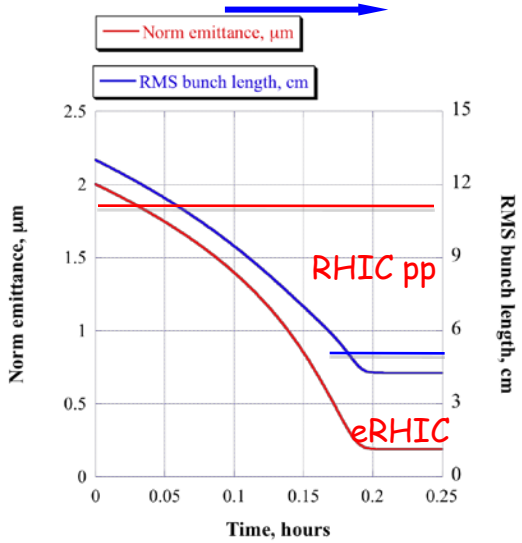

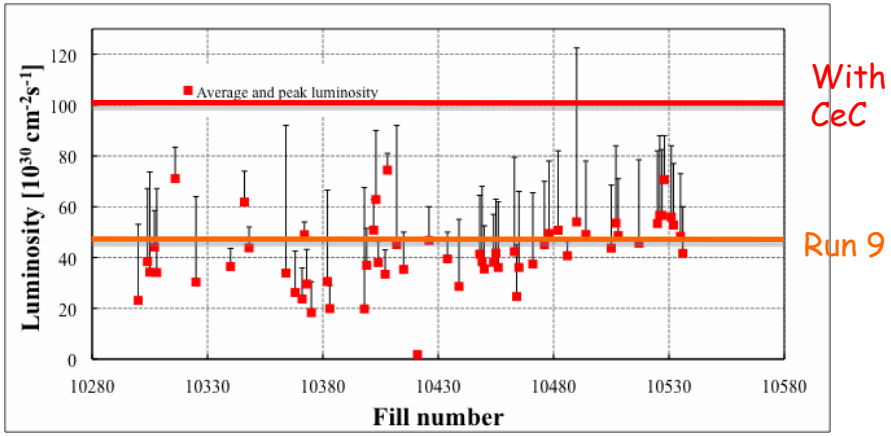

Luminosity gain for RHIC PP about a factor of 2

Details in V. Litvinenko presentation at C-AD seminar, 4 pm, Friday, July 31, 2009

ERL, Low Energy eCooling Described by Dmitry and Alexei in the following talks

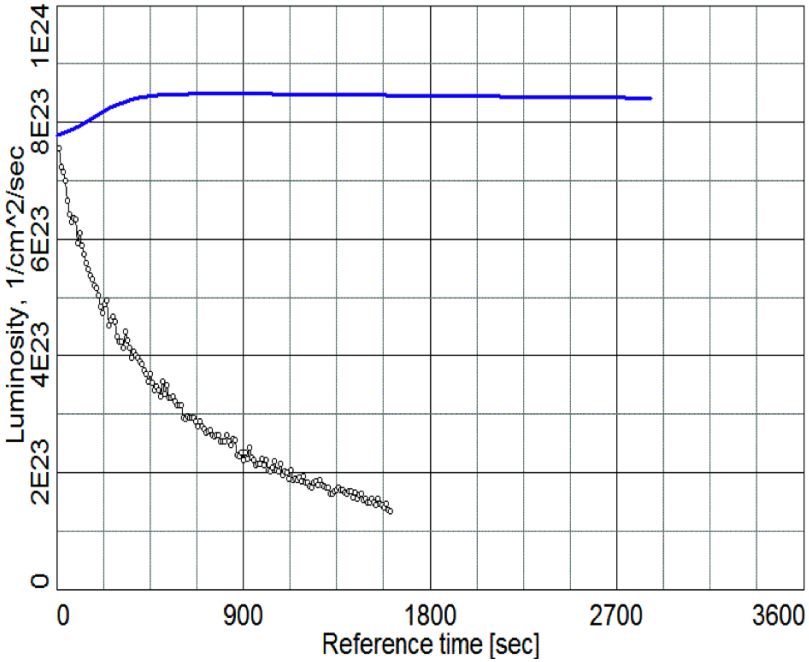
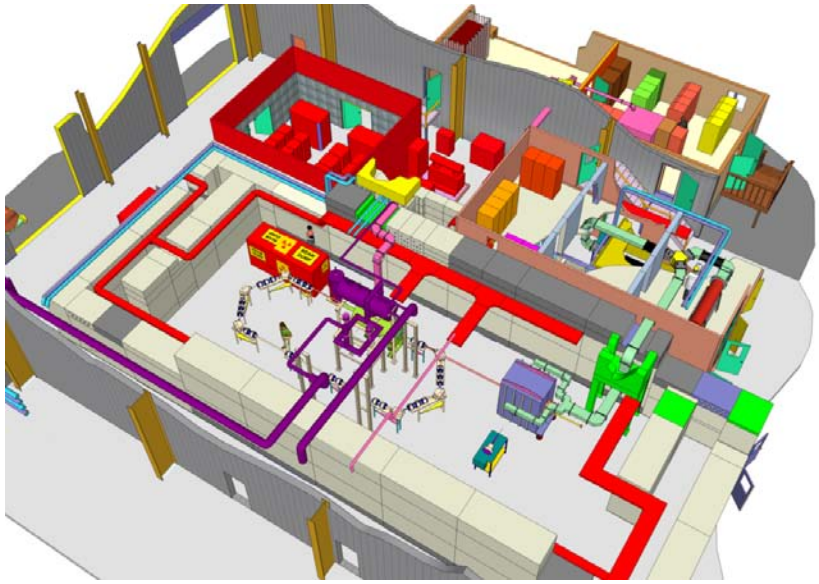
Simulation of luminosity with (blue line) and without (black dots) electron cooling at γ=2.7 (Fedotov)