RHIC Retreat Closeout: summary of "R&D, Projects, and Resources"

Friday, July 17th

AM	***R&D, Projects, and Resources***	
Organizers	**F. Pilat, M. Minty**	
Chair	**T. Roser**	
8:00	EBIS	D. Raparia
8:20	Stochastic Cooling Project	M. Blaskiewicz / M. Brennan
8:40	Electron Lens Project	W. Fischer
9:00	Low Energy Cooling	A. Fedotov
9:20	Superconducting RF program	I. Ben-Zvi
9:40	ERL Program	D. Kayran
10:00	MeRHIC, eRHIC	V. Ptitsyn

http://www.c-ad.bnl.gov/RHIC/retreat2009/

EBIS – ELECTRON BEAM ION SOURCE

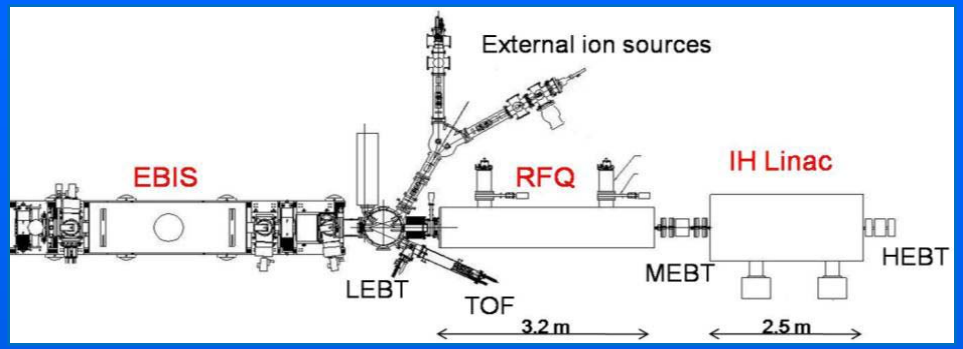

08/2009: commissioning start
12/2009: RFQ / linac installation complete
01/2010: beam commissioning
early 2010: tests with Booster injection
2011: possibly 200 GeV, U+U

D. Raparia

STOCHASTIC COOLING

2006: first test of longitudinal cooling
2007: longitudinal cooling operational
2009: first transverse system installed and tested

"signal suppression" demonstrated:

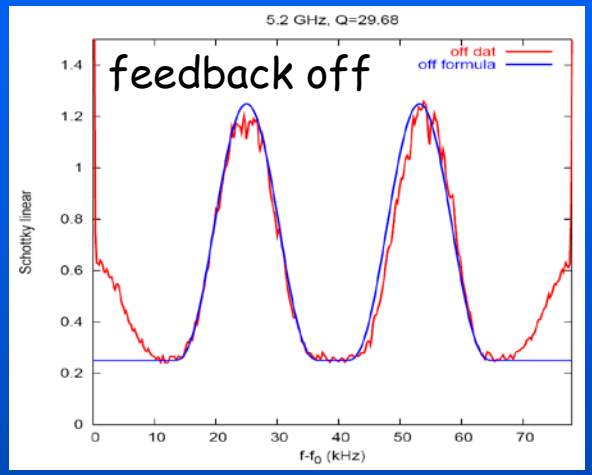

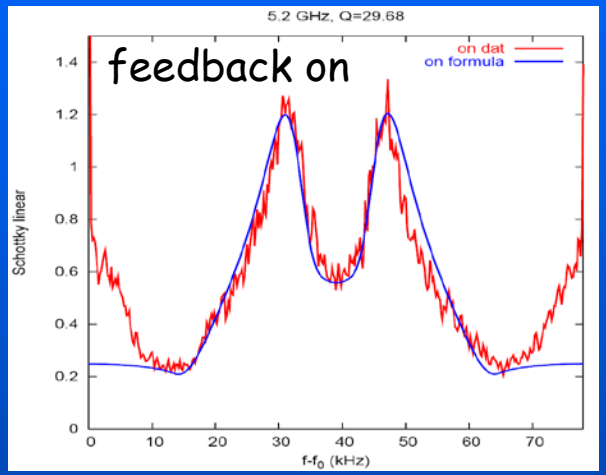

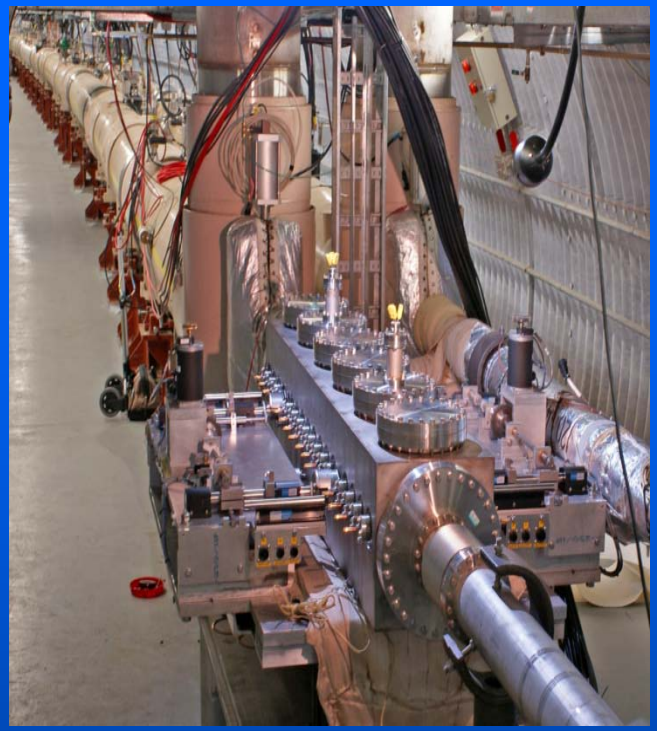

2010: first test of transverse cooling of ion beams
2012: 200 GeV, Au+Au, full stochastic cooling

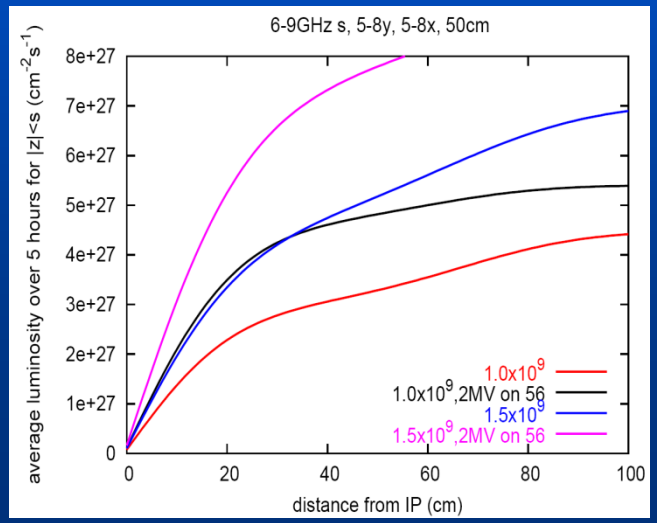

<u>RHIC luminosity upgrade</u> (for ions):

Au+Au, 200 GeV: 40×10^{26} $cm^{-2}s^{-1}$ (×4)

(with $\beta^* = 0.5$ m, 56 MHz rf cavity)

M. Blaskiewicz, J.M. Brennan

SUPERCONDUCTING ACCELERATOR R&D

SC RF infrastructure:

Niobium chemistry facility (at AES)

clean room facility (bldg 905)

vertical test facility (next to ERL facility)

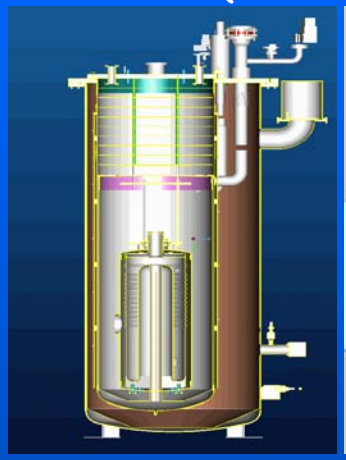

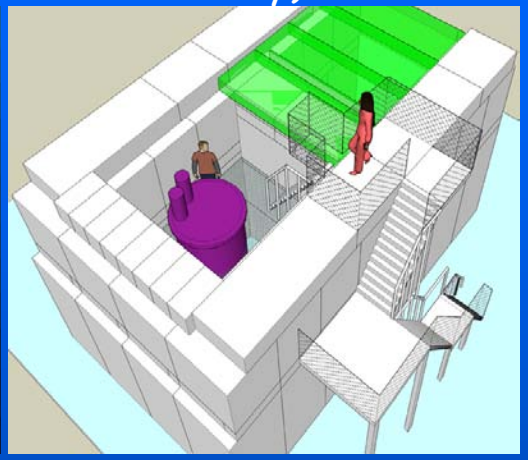

SC cavity development:

56 MHz cavity (2012)

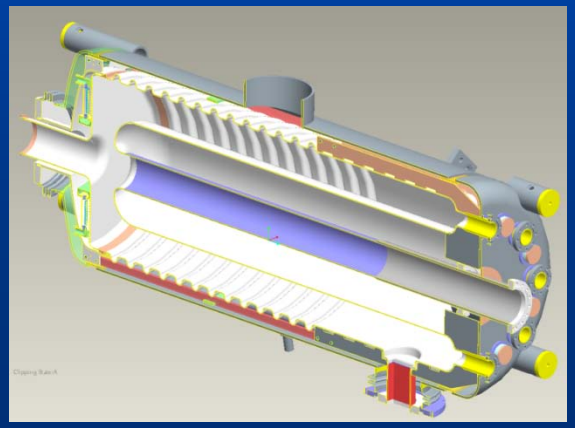

5-cell, 704 MHz cavity for ERL, MeRHIC, eRHIC

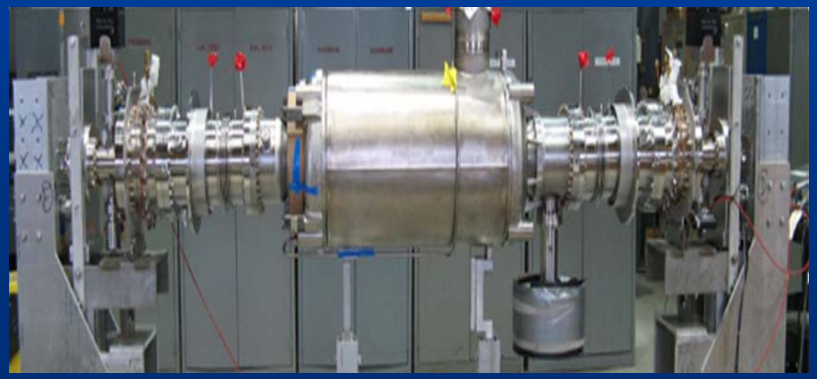

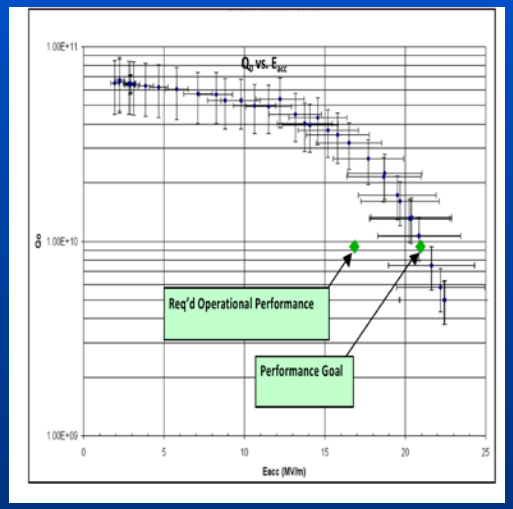

+ copper-model hom tests with 2 structures

I. Ben-Zvi

ELECTRON SOURCE R&D

electron guns:

superconducting RF polarized gun GaAs:CS, QE test

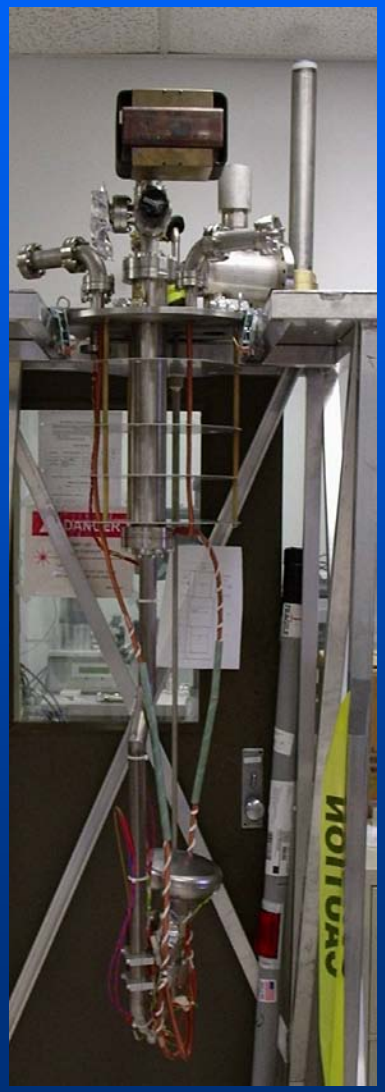

multi-cathode DC gun for MeRHIC

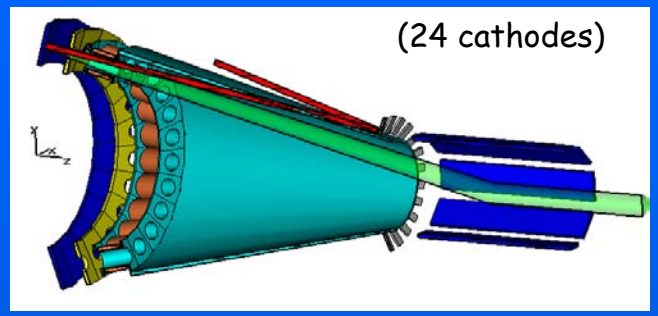

high-current SC RF gun for the ERL

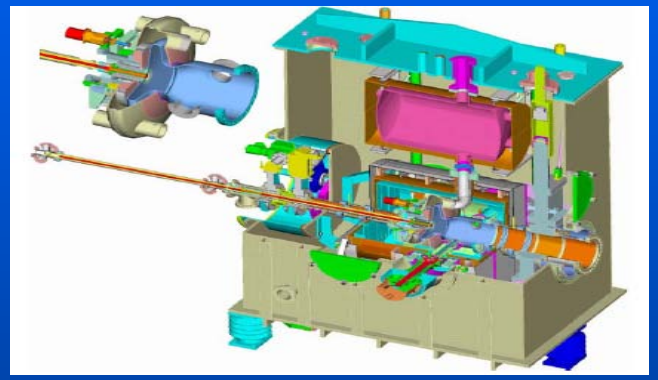

112 MHz superconducting rf gun for low-energy electron cooling option

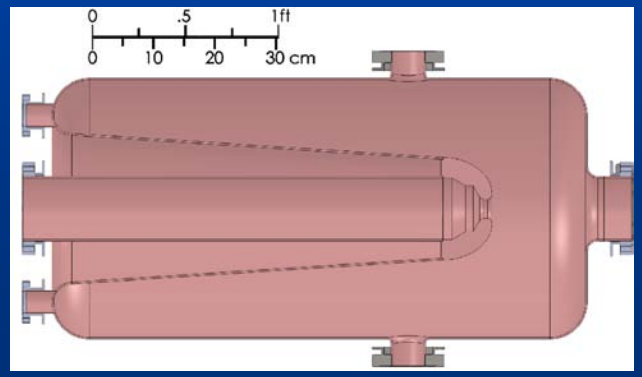

photocathodes:

multi-alkaline preparation (3rd generation deposition system for higher availability), ERL

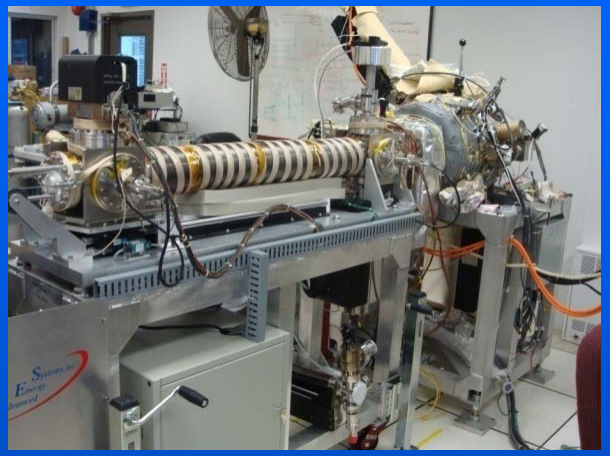

diamond amplified photocathode – orders of magnitude increase in effective quantum efficiency

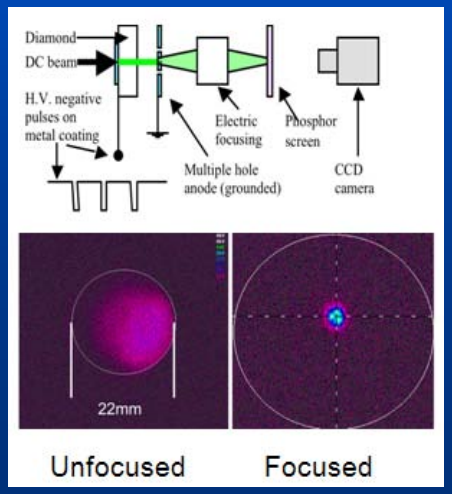

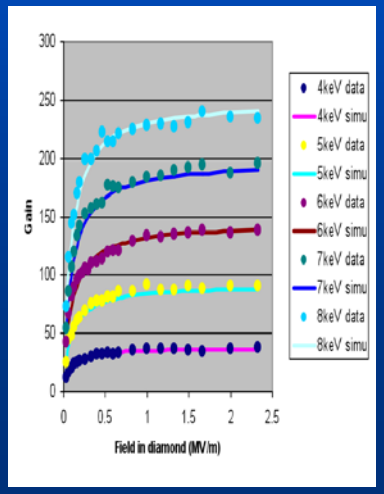

I. Ben-Zvi

ERL – ENERGY RECOVERY LINAC

test-bed for future RHIC projects; see parameter table for comparisons with requirements for

1) MeRHIC
2) eRHIC,
3) pre-cooling,
4) coherent electron cooling

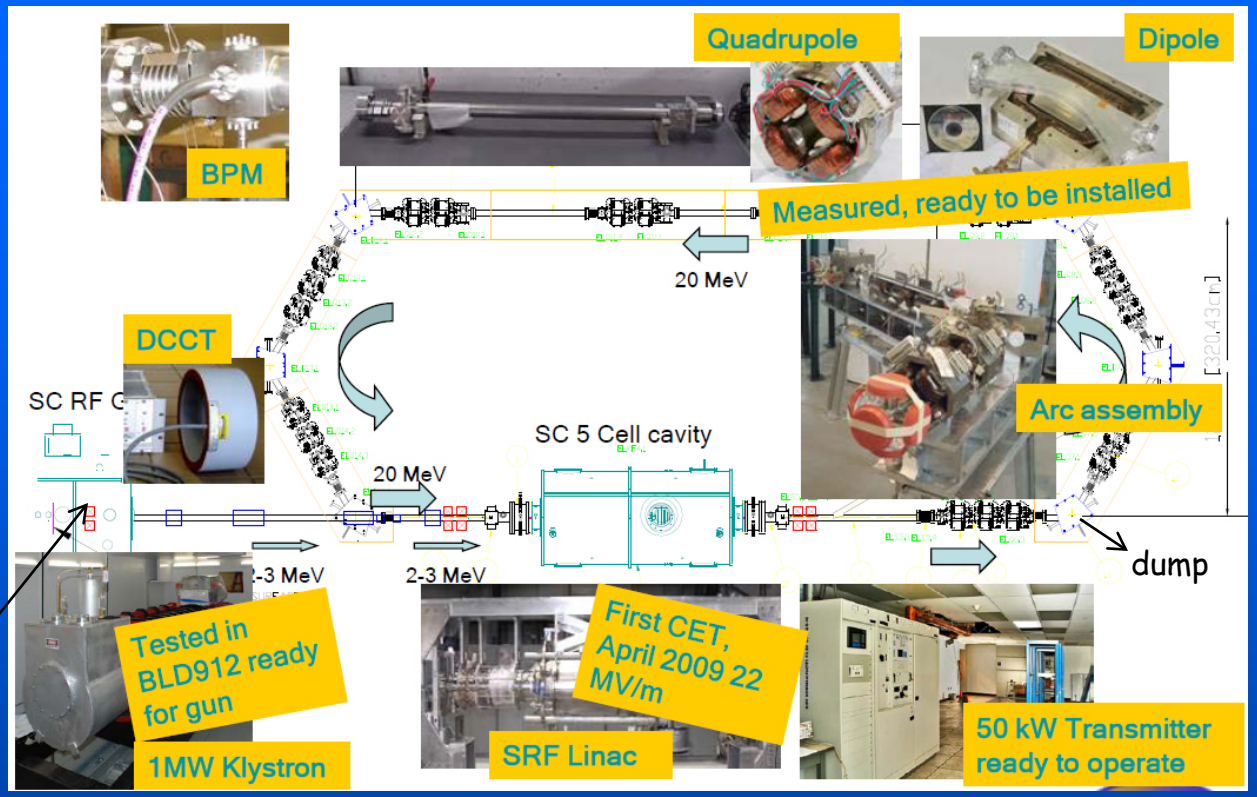

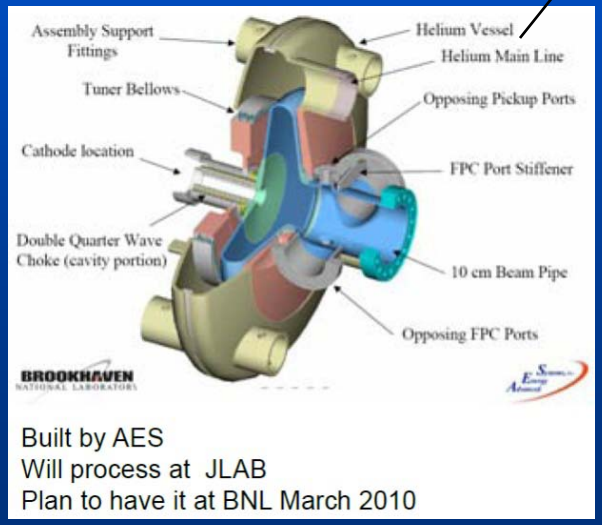

high temp SC RF gun

03/2009: first cooldown of 5-cell sc rf cavity, hom msrmts
04/2009: cold emission test of cavity, Q-measurements
05/2009: injector drive laser installed
03/2010: refrigeration system complete
10/2010: demonstration of beam from gun through 5-cell cavity to dump ("G5 test")
2010: ERL installation complete
2011: ERL commissioning
2013: possible test of coherent electron cooling (in RHIC)

D. Kayran

ELECTRON LENS

concept:
nonlinear beam-beam forces in head-on collisions (RHIC) between e- and p+ are compensated by electron space charge forces

beam-beam potential

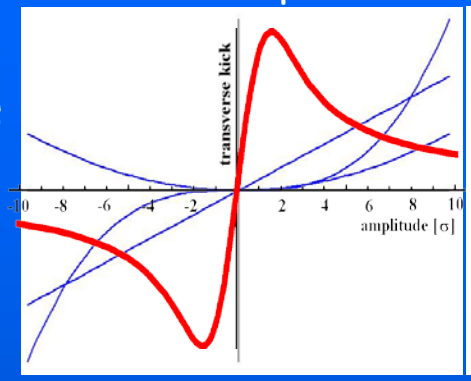

beam tune spread reduction

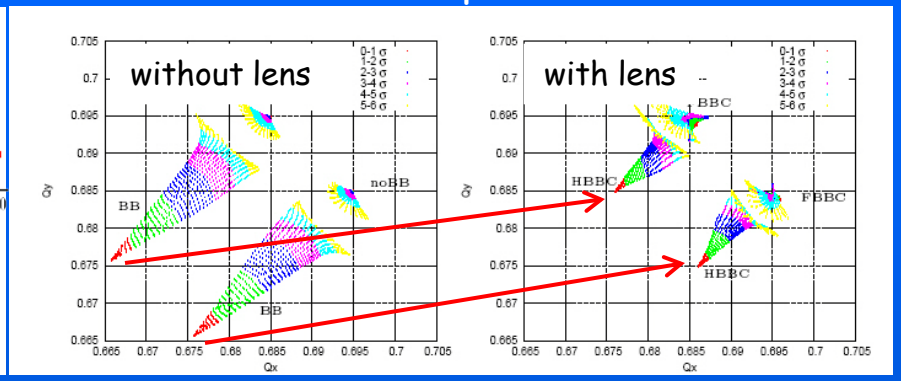

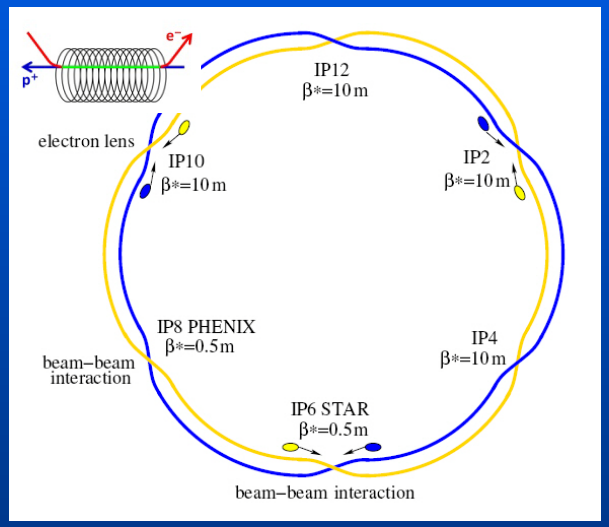

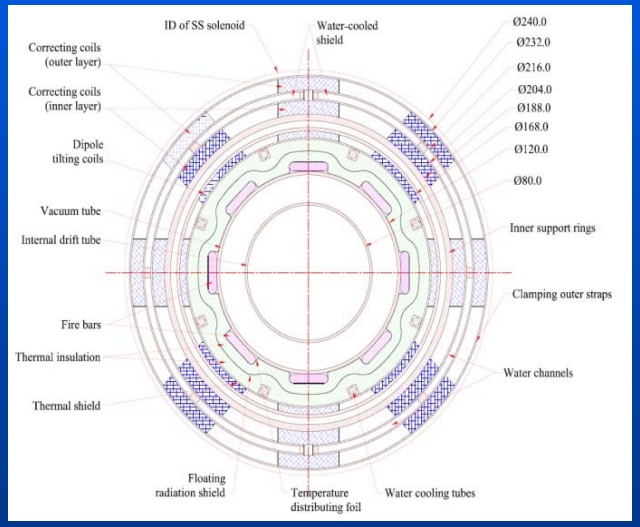

solenoid design considerations:
- 6 T, superconducting
- 2.5 m, ~50 micron uniformity (straightness)

challenges:
- relative e-p beam alignment
- (possible) nonlinearities between lens and IPs

expectation: ~ factor 2 increase in luminosity (including polarized source upgrade and modifications required for doubling beam intensities); factor 4, theoretically

2014: 200 GeV, p+p, first tests

W. Fischer

ELECTRON COOLING FOR LOW ENERGY RHIC OPERATION

concept: ions lose excess energy via Coulomb scattering with e- of equal velocity until thermal equilibrium is attained

expectation: 3-6 fold increase in integrated luminosity

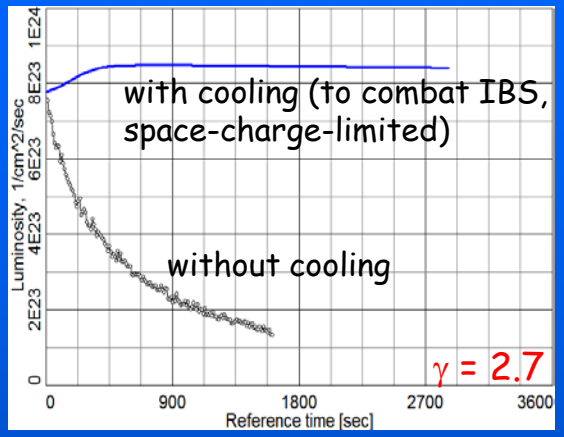

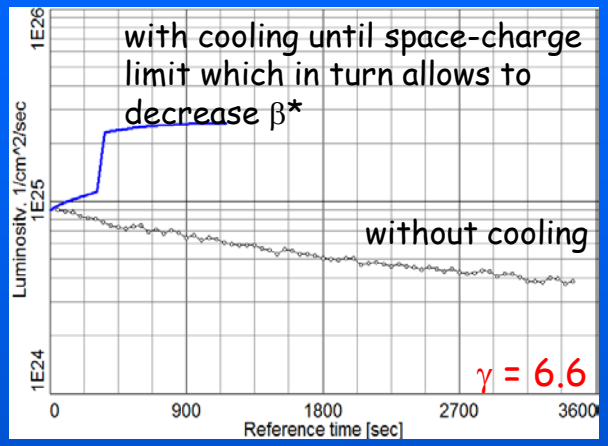

pelletron at FNAL

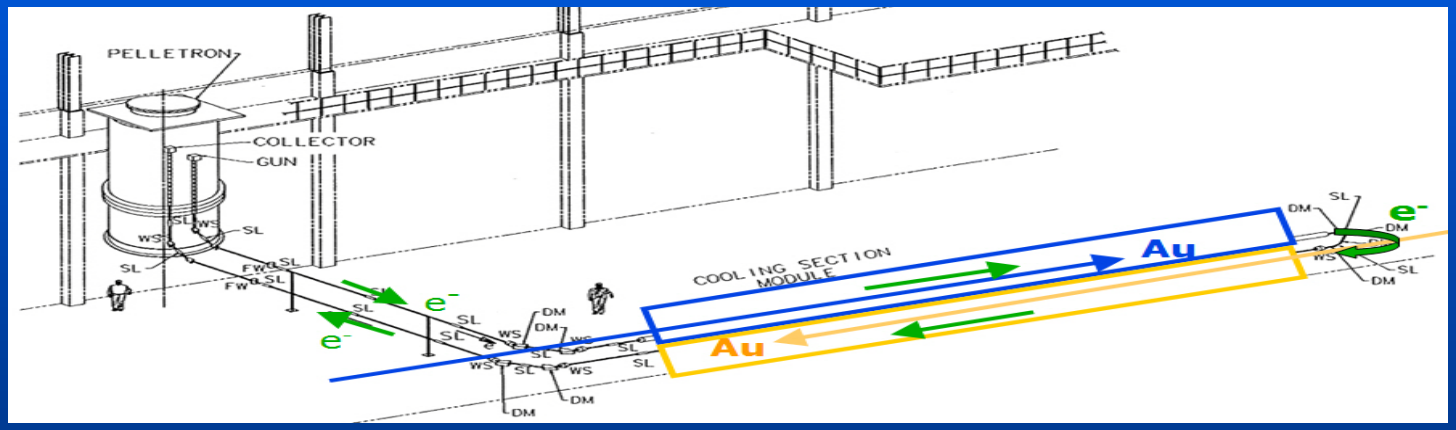

Possible schedule for "low energy electron cooling" in RHIC:

end of 2011	FNAL recycler-ring cooler available
2012:	transport and installation into RHIC
2012-2013:	commissioning
2014:	5-20 GeV/nucleon, Au+Au with electron cooling

A. Fedotov

MeRHIC and eRHIC

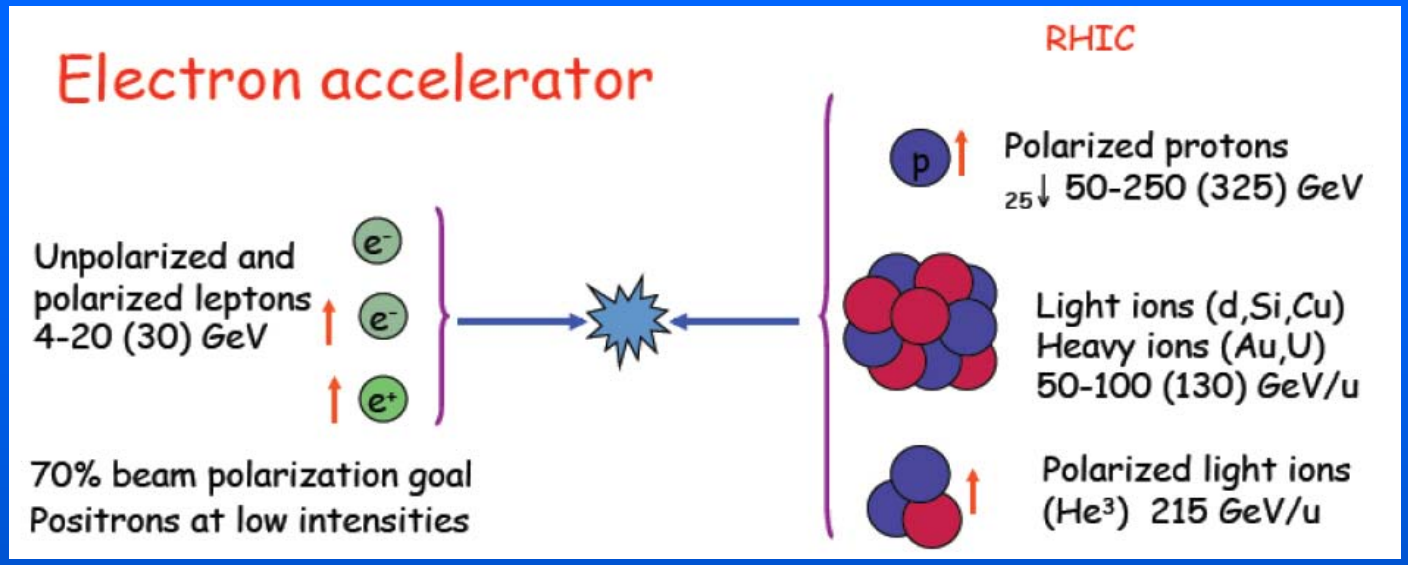

MeRHIC : Medium Energy Electron-Ion collider,accelerator and detector located in IP2 region

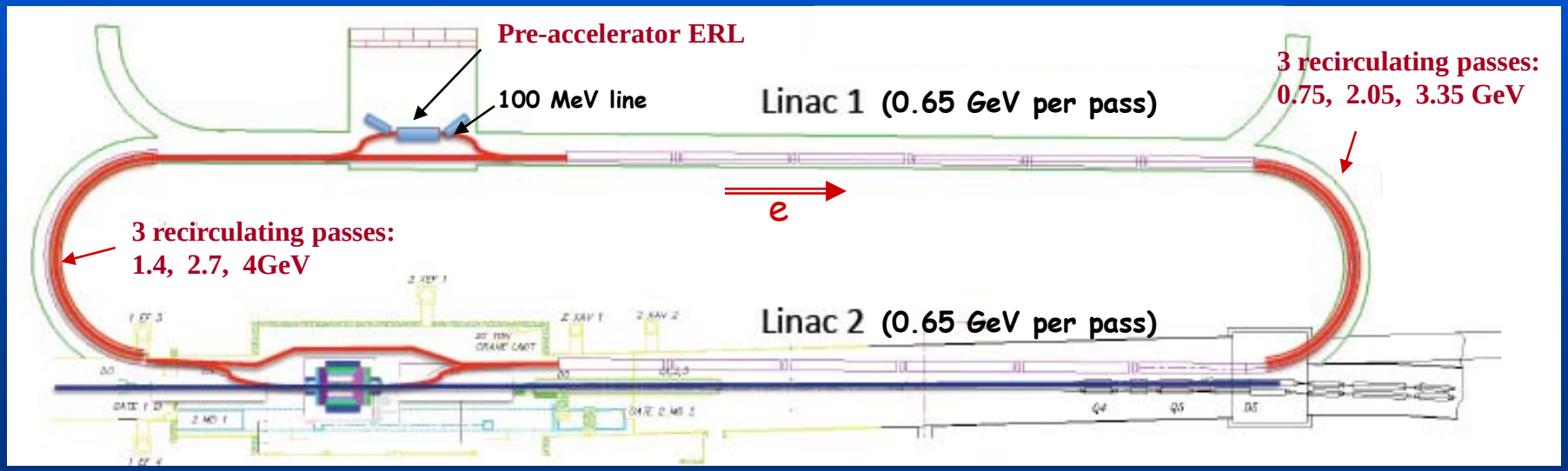

250 GeV p↑ × 4 GeV e↑

$L \sim 10^{32}\ cm^{-2}s^{-1}$

$L \sim 10^{33}\ cm^{-2}s^{-1}$ (with cooling)

V. Ptitsyn

eRHIC: two ERL-based design options

high luminosity polarized electron ion collider

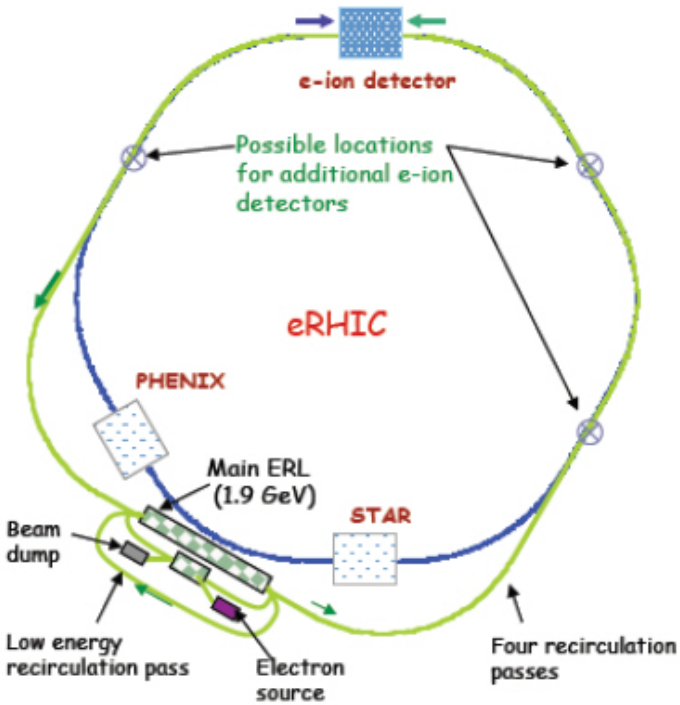

More appropriate for parallel operation with p-p experiments

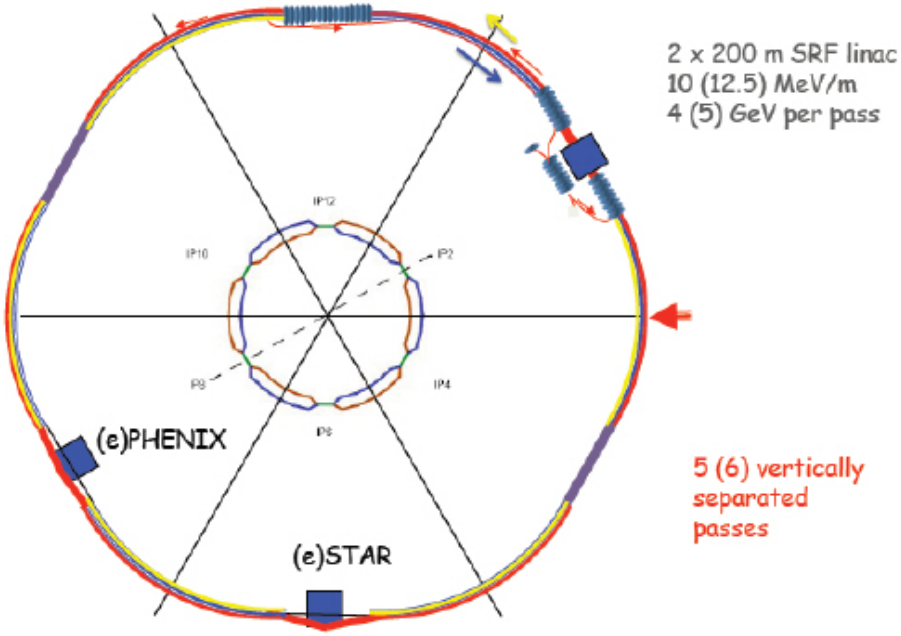

More appropriate for staging approach

250 (325) GeV p↑ × (10-20) GeV e↑, L ~ 3 × 10^{33} $cm^{-2}s^{-1}$
20 GeV e × 100 (120) GeV/n Au, full luminosity
30 GeV e × 100 (120) GeV/n Au, ~ 1/5 full luminosity

V. Ptitsyn

MeRHIC and eRHIC

R&D items and main challenges

- Electron beam R&D for ERL-based design:
  - High intensity polarized electron source
    - Development of large cathode guns with existing current densities ~ 50 mA/cm^2 with good cathode lifetime.
  - Energy recovery technology for high power beams
    - multicavity cryomodule development; high power beam ERL, BNL ERL test facility; loss protection; instabilities.
  - Development of compact recirculation loop magnets *(for eRHIC)*
    - Design, build and test a prototype of a small gap magnet and its vacuum chamber.
  - Beam-beam effects: e-beam disruption
- Main R&D items for ion beam:
  - Beam-beam effects: electron pinch effect; the kink instability …
  - Polarized 3He acceleration
  - 166 bunches *(for eRHIC)*
- General EIC R&D item:
  - Proof of principle of the coherent electron cooling

Future possible eRHIC upgrades:

250 (325) GeV p↑ × (10-20) GeV e↑, L ~ 10^{35} cm^{-2}s^{-1} with coherent e- cooling and smaller β*

800 GeV p↑ × 20 GeV e↑, L ~ 10^{34} cm^{-2}s^{-1}
30 GeV e × 300 (120) GeV/n Au, L ~ 10^{32} cm^{-2}s^{-1}
} with one new 800 GeV RHIC ring

V. Ptitsyn