VALVE LIST

ITEM	POSITION	TYPE	FAIL POSITION	DIMENSION	RANGE	Kv
CV1	in warm helium cool-down	electro-pneumatic	NC	DN10 l=75 mm	4-20 mA	2.8 =%
CV2	in reservoir helium	electro-pneumatic	NO	DN10 l=600 mm	4-20 mA	2.8 =%
CV3	in cold helium cool-down	electro-pneumatic	NC	DN10 l=600 mm	4-20 mA	2.8 =%
CV4	out reservoir helium	electro-pneumatic	NO	DN10 l=600 mm	4-20 mA	2.8 =%
CV5	FIC05 current leads A	electrical	NC			
CV6	FIC06 current leads B	electrical	NC			
CV8	thermosiphon	electro-pneumatic	NO	DN10 l=735 mm	4-20 mA	6 dig.
V4	quech	electro-pneumatic	NC	DN40 l=400 mm	24-0 Volt	45 dig.
SV5	safety	spring		DN50 / DN60		0.93
NRV9	warm helium check	spring				
V10	out coil helium	manual-pneumatic	NC	DN10		
MV1	inlet shield	manual		DN10 l=735 mm		2.8 =%
DV10	driver valve for V10	3 way manual				

BRONKHORST HI-TEC

CALIBRATION CERTIFICATE

We herewith certify that the instrument mentioned below has been calibrated in accordance with the stated values and conditions. The calibration standards used are traceable to national standards of the Dutch Weights & Measures (NMi).

Identifications

FIC 06
↳ Broken

	Calibrated Instrument	Calibration Standard
Type :	Flowmeter	Rotor meter
Serial number :	9722223A	80171
Model number :	F-103I-FD-55-V	FRM R-025-TD
Certificate no. :	BHTG07/132443	NMi/GS1S47spe

Conditions

	Customer		Calibration
Fluid :	He	Fluid :	AiR
Pressure :	1053 mbar (a)	Pressure :	0.0 bar (g)
Temperature :	10 °C	Temperature :	23.9 °C
Flow (*) :	8.25 m3n/h	Room temperature :	23.9 °C
Output range :	4 - 20 mA	Atm. pressure :	1015 hPa

Results

Nominal Flow Setting	Calibrated Output Signal	Customer Flow(*)		Deviation
0.0 %	4.032 mA	0.000	m3n/h	0.2 %FS
25.0 %	8.014 mA	1.994	m3n/h	0.9 %FS
50.0 %	11.990 mA	4.125	m3n/h	-0.1 %FS
75.0 %	15.992 mA	6.151	m3n/h	0.4 %FS
100.0 %	19.990 mA	8.291	m3n/h	-0.6 %FS

Notes

* Reference conditions of flow units: 0.0 °C, 1013.25 hPa (a).
* The conversion of calibration conditions to customer flow is done by using Bronkhorst HI-TEC FLUIDAT software.

Calibrator : H.H.H.

Date : 01-09-1997

Signed : .....

QC : .....

BRONKHORST HI-TEC

SENSORS FOR MASS FLOW AND PRESSURE

CALIBRATION CERTIFICATE

We herewith certify that the instrument mentioned below has been calibrated in accordance with the stated values and conditions. The calibration standards used are traceable to national standards of the Dutch Weights & Measures (NMi).

IDENTIFICATIONS

	CALIBRATED INSTRUMENT	CALIBRATION STANDARD
Type	Flowcontroller	Rotor meter
Serial number	952055 A	80232
Model number	F-113AI-FD	CS3R25
Certificate no.	CS3G07/008855	NMi/GS1S07spe

CONDITIONS

	CUSTOMER	CALIBRATION	
Fluid	He	AIR	
Pressure	150 mbar(g)	1 bar(g)	
Temperature	20 °C	23 °C	
Flow (*)	15 m3n/h	Room temperature	23 °C
Output range	4 - 20 mA	Atm. pressure	1013 hPa

RESULTS

NOMINAL FLOW SETTING	CALIBRATED OUTPUT SIGNAL	CUSTOMER FLOW (*)	DEVIATION
0.0 %	4.032 mA	0.000 m3n/h	0.2 %FS
25.0 %	8.000 mA	3.803 m3n/h	-0.4 %FS
50.0 %	11.998 mA	7.471 m3n/h	0.2 %FS
75.0 %	15.997 mA	11.14 m3n/h	0.7 %FS
100.0 %	20.005 mA	15.07 m3n/h	-0.5 %FS

MHD

NOTES

* The conversion of calibration conditions to customer flow is done by using Bronkhorst HI-TEC FLUIDAT software.
Reference conditions of flow units: 0.0 °C, 1013.25 hPa.

Calibrator : H.H.N. Date : 05-10-95

Signed : . . . . . QC : . . . . . .

BRONKHORST HIGH-TECH B.V.
Nijverheidsstraat 1a, 7261 AK Ruurlo, The Netherlands
Tel. 31-5735-2020 Fax. 31-5735-3297

Bank: ABN-AMRO, Vorden, no. 43.43.52.635
BTW no. NL801989978B01
Registered at the Chamber of Commerce at Zutphen no. 58979

ISO 9001

BRONKHORST HI-TEC

MHD

SENSORS FOR MASS FLOW AND PRESSURE

CALIBRATION CERTIFICATE

We herewith certify that the instrument mentioned below has been calibrated in accordance with the stated values and conditions. The calibration standards used are traceable to national standards of the Dutch Weights & Measures (NMi).

IDENTIFICATIONS

	CALIBRATED INSTRUMENT	CALIBRATION STANDARD
Type :	Flowcontroller	Rotor meter
Serial number :	952055 B	80232
Model number :	F-113AI-FD	CS3R25
Certificate no. :	CS3G07/008854	NMi/GS1S07spe

CONDITIONS

	CUSTOMER	CALIBRATION
Fluid :	He	AIR
Pressure :	150 mbar(g)	1 bar(g)
Temperature :	20 °C	23 °C
Flow (*) :	15 m3n/h	Room temperature : 23 °C
Output range :	4 - 20 mA	Atm. pressure : 1013 hPa

RESULTS

NOMINAL FLOW SETTING	CALIBRATED OUTPUT SIGNAL	CUSTOMER FLOW (*)	DEVIATION
0.0 %	4.032 mA	0.000 m3n/h	0.2 %FS
25.0 %	8.000 mA	3.803 m3n/h	-0.4 %FS
50.0 %	11.997 mA	7.479 m3n/h	0.1 %FS
75.0 %	15.990 mA	11.15 m3n/h	0.6 %FS
100.0 %	20.000 mA	15.06 m3n/h	-0.4 %FS

MHD

NOTES

* The conversion of calibration conditions to customer flow is done by using Bronkhorst HI-TEC FLUIDAT software.
Reference conditions of flow units: 0.0 °C, 1013.25 hPa.

Calibrator : H.H.H. Date : 05-10-95

Signed : ..... QC : .....

BRONKHORST HIGH-TECH B.V.
Nijverheidsstraat 1a, 7261 AK Ruurlo, The Netherlands
Bank: ABN-AMRO, Vorden, no. 43.43.52.535
BTW no. NL801989978B01
Registered at the Chamber of Commerce at Zutphen no. 58979

ISO 9001

INSTRUCTION MANUAL

H1-TECH
6981055

BENUTZER-HANDBUCH

MODE D'EMPLOI

MANUALE DI ISTRUZIONI

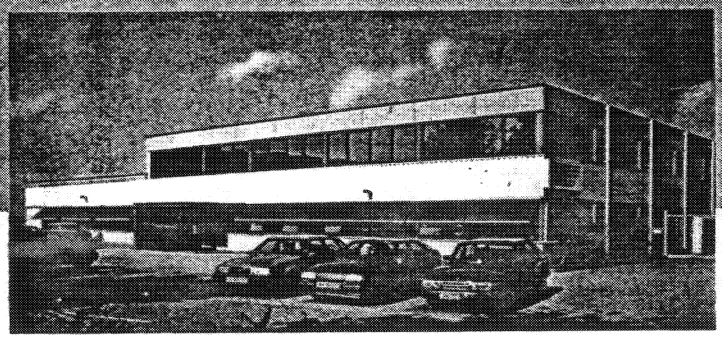

ANSALDO

ISO 9001

Accredited by the Dutch Council for Certification

BRONKHORST HI-TEC

31

Nijverheidsstraat 1a - 7261 AK Ruurlo The Netherlands
Telephone: (0573) 45 88 00 - Fax: (0573) 45 88 08

INSTRUCTION MANUAL

MASS FLOW METERS AND CONTROLLERS FOR GASES

INDUSTRIAL STYLE

Doc. no: 902.056 G
Date: 05 - 09 - 1996

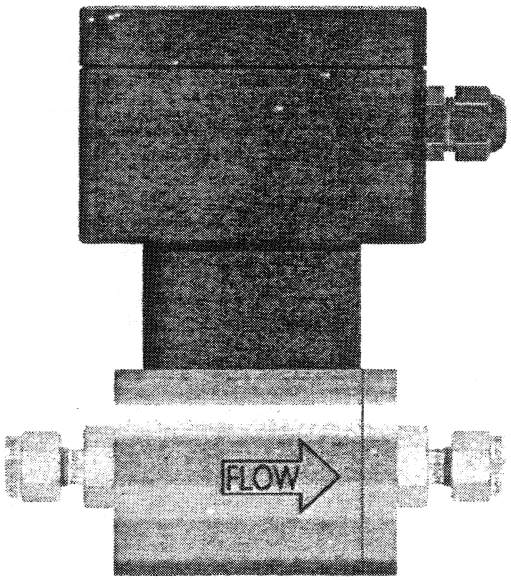

ATTENTION:
Before installing and operating the instrument it is recommended that this instruction be read. Not following the guidelines could result in personal injury and/or damage to the equipment.

The information in this manual has been reviewed and is believed to be entire reliable. No responsibility, however, is assumed for inaccuracies. The material in this manual is for information purposes only, and is subject to change without notice.

Bronkhorst HIGH-TECH B.V.
"June 1989"

Warranty

The products of Bronkhorst HIGH-TECH B.V. are warranted against defects in material and workmanship for a period of one year from the date of shipment provided they are used in accordance with the ordering specifications and not subjected to abuse or physical damage. Products that do not operate properly during this period may be repaired or replaced at no charge. Repairs are normally warranted for 90 days or the balance of the original warrant, whichever is longer.

The warranty includes all initial and latent defects, random failures, and undeterminable internal causes.

It excludes failures and damage caused by the customer, such as contamination, improper electrical hook-up, dropping etc.

Re-conditioning of products primarily returned for warranty service that is partly or wholly judged nonwarranty may be charged for.

Bronkhorst HIGH-TECH B.V. prepays outgoing freight charges when any party of the service is performed under warranty, unless otherwise agreed upon beforehand, however, if the product has been returned collect to Bronkhorst HIGH-TECH B.V., these costs are added to the repair invoice. Import and/or export charges, foreign shipping methods/carriers are paid for by the customer.

Short-Form Operation Instruction

- Before installing your Mass Flow Meter/Controller it is important to check:
  * flow rate
  * gas to be metered
  * up- and downstream pressures
  * output signal

- Watch the red-coloured label and make sure the testpressure is in agreement with normal safety factors for your application.

- Check if the piping system is clean. For absolute cleanliness always install filters to assure a clean, moisture- and oil-free gas stream.

- Install the Mass Flow Meter/Controller in the line and tighten the fittings according to the instructions of the supplier of the fittings

- Apply power to the instrument and allow for approx. 30 minutes to warm-up and stabilize. This may be done with or without gas flow.

- Your Mass Flow Meter/Controller is now ready for operation.

TABLE OF CONTENTS

1 Introduction

1.1 General description ..... page 7
1.2 Principle of operation ..... page 7
1.3 Sensor and laminar flow device ..... page 7
1.4 Control valve ..... page 8
1.5 Electronics ..... page 8
1.6 Gas conversion factors ..... page 9
1.7 Viscosity factor for D-instruments (large bore capillary) ..... page 10
1.8 Selection of model number for D-instruments (large bore capillary) ..... page 11
1.9 Pressure losses for D-instruments (large bore capillary) ..... page 11
1.10 Pressure drop for F-106A - F-106D, F-116A, F-116B, F-107A - F-107D and F-117A - F-117D ..... page 12

2 Installation

2.1 Receipt of equipment ..... page 13
2.2 Return shipment ..... page 13
2.3 Service ..... page 13
2.4 Mounting ..... page 13
2.5 In-line-filter ..... page 15
2.6 Gas connections ..... page 15
2.7 Piping ..... page 16
2.8 Electrical connections ..... page 16
2.9 Caution ..... page 16
2.10 Supply pressure ..... page 16
2.11 System purging ..... page 17
2.12 Seals ..... page 17
2.13 Equipment storage ..... page 17
2.14 Electromagnetic compatibility ..... page 17
2.14.1 Conditions for compliance with EMC requirements ..... page 17

3 Operation

3.1 General ..... page 19
3.2 Power and warm-up ..... page 19
3.3 Zeroing ..... page 19
3.4 Start-up ..... page 19
3.5 Operation conditions ..... page 19
3.6 Flow performance ..... page 20
3.6.1 Flow sensor ..... page 20
3.6.2 Flow controller ..... page 20

4 Maintenance

4.1 General ..... page 21
4.2 Flow sensor ..... page 21
4.3 Flow controller ..... page 21
4.4 Control valves ..... page 21
4.4.1 Control valves series F-001AC and F-002C ..... page 21
4.4.2 Pilot operated control valves series F-002AC/F-003AC and F-003BC ..... page 22
4.4.3 F-004BC ..... page 22
4.4.4 K_V-value calculation/selection series F-001AC/F-002C/F-002AC/F-003AC/F-003BC and F-004BC ..... page 22
4.4.5 Control valve series F-033C (vary-P valve) ..... page 22
4.4.6 Maximum allowable pressure drop series F-001AC and F-002C control valves ..... page 23

4.4.7 Maximum and minimum allowable pressure drop series F-002AC/F-003AC and F-003BC control valves ..... page 23
4.5 Calibration procedure ..... page 24
4.5.1 Procedure for Industrial style Sensor/Controller ..... page 24
4.6 P.C. board lay-out industrial style ..... page 24

5 Troubleshooting

5.1 General ..... page 25
5.2 Troubleshooting summary ..... page 25

Appendices

1 Gas conversion table and viscosity factor table
2 Dimensional drawings
3 Hook-up diagrams
4 Calibration certificate

1 INTRODUCTION

1.1 General description

The BRONKHORST HI-TEC series mass flow meter is an accurate device for measuring gas flows up to 400 bar, virtually independent of pressure and temperature changes.
This convenience of measuring mass flow is offered at a reasonable price. The system can be completed with a control valve and flexible readout to measure and control gas flows from 5 ml_n/min. up to 1000 m^3_n/h for the C-instruments, from 0 - 10 ml_n/min. up to 100 l_n/min. for the D-instruments.

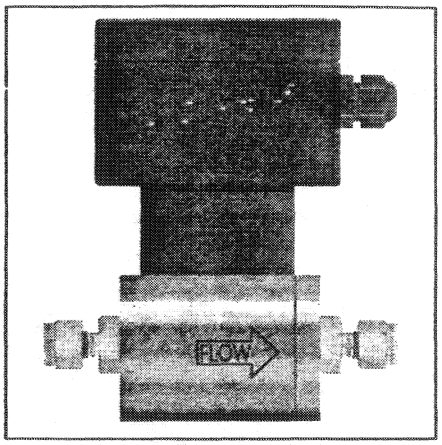

Model F-112AI MFM

1.2 Principle of operation

The BRONKHORST HI-TEC series flow sensor is operating on a principle of heat transfer by sensing the ΔT along a heated section of a capillary tube. Part of the total flow is forced through the capillary by means of a laminar flow device in the mainstream generating a Δp.
The design of the laminar flow device is such that flow conditions in both the capillary and laminar flow device are comparable, thereby resulting in proportional flow rates through the meter. The ΔT sensed by the upstream and downstream temperature sensors on the capillary depends on the amount of heat absorbed by the mass of the gas flow.
The heat transfer function between gas mass flow and temperature difference can be described by the equation:

$$\Delta T = K \cdot c_p \cdot \Phi_m$$

ΔT = temperature difference
c_p = specific heat
K = constant factor
Φ_m = mass flow

The temperature sensors are part of a bridge circuit and the unbalance is amplified to the right signal level e.g. 0 - 5 Vdc.

1.3 Sensor and laminar flow device

Depending on the application the BRONKHORST HI-TEC flow sensors have different removable capillaries:

1- Small bore (C-type)
2- Large bore (D-type)

Large bore flow sensors are preferably used for reactive gases and low pressure applications.

Small bore sensors have a pressure drop at atmospheric conditions of approximately 35 mbar and the large bore less than 0.5 mbar.

Small bore sensors have a laminar flow device consisting of a number of discs with precision etched flow channels. Each flow channel represents approx.10 ml_n/min airflow at 35 mbar.
Large bore sensors have a laminar flow device which forms together with the main channel an annular channel. The gap of this annular channel determines the flow capacity.

1.4 Control valve

A standard valve is a normally-closed solenoid valve. The plunger is lifted by the magnetic field of the coil. The orifice under the plunger is removable for optimizing the orifice diameter.
Also a normally opened solenoid valve is available.

**THE CONTROL VALVE IS NOT DESIGNED FOR POSITIVE SHUT-OFF.
IT IS RECOMMENDED TO INSTALL A SEPARATE SHUT-OFF VALVE IN THE LINE IF SO REQUIRED. ALSO PRESSURE SURGES, AS MAY OCCUR DURING SYSTEM PRESSURISATION MUST BE AVOIDED.**

For high flowrates a pilot operated valve is used. The pilot valve controls the pressure difference across a membrane, which lifts the main plunger.
Depending on the orifice diameter the pressure drop across the valve is limited.
For process conditions where up- and/or downstream pressure vary much, a special type of valve, VARY-P, has been designed. This valve consists of two valves; one for flow control and one for pressure compensation. E.g. for flowrates up to 10 l_n/min the upstream pressure may vary from 10-400 bar.

MODEL F-033C Vary-P valve

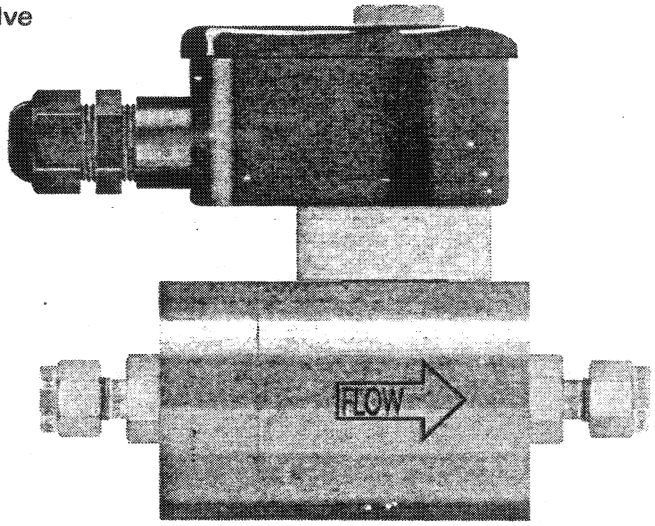

1.5 Electronics

The p.c.boards designed by BRONKHORST HIGH-TECH B.V. are mainly provided with surface mounted devices (SMD).

P.C. boards of the Industrial-style flow meters are provided with terminals for cable connections.

Industrial Flow meters/controllers need single supply 0 - 15 Vdc and on request max. 24 Vdc.
Each electronic p.c. board has one of the following output signals:

0-5 Vdc with 2 kΩ min load
0-10 Vdc with 2 kΩ min load
0-20 mA with 375 Ω max load (current sinking output)
4-20 mA with 375 Ω max load (current sinking output)
The appropriate signal is selected by means of a jumper setting.

1.6 Gas conversion factors

The general formula for determining the relationship between signal and mass flow reads:

$$V_{signal} = K \cdot c_p \cdot \Phi_m = K \cdot c_p \cdot \rho \cdot \Phi_v$$

in which:

V_{signal} = output signal
K = constant
ρ = density
c_p = specific heat
Φ_m = mass flow
Φ_v = volume flow

As soon as the c_p-value and density of the gas to be metered change, the signal must be corrected. The conversion factor C reads:

$$C = \frac{c_{p_1} \cdot \rho_1}{c_{p_2} \cdot \rho_2}$$

in which:

c_p = specific heat
ρ = density

(1) gas calibrated
(2) gas to be measured

Note:
The c_p-value used for the calculation of the conversion factor must be taken at a temperature 50°C. higher than the required temperature.
This factor is called c_p-cal (c_p-cal (T,p) = c_p (T50°C., p)).
The conversion factors for commonly used gases related to N_2 at normal conditions are stated in the Gas Conversion Table in Appendix 1.

Example:
Meter calibrated on N_2 (200 ml_n/min) .
Gasflow passing the meter is CO_2
Output signal reads 80.0%.

$$\text{Actual } CO_2\text{-flow} = 80.0 \cdot \frac{0.74}{1.000} = 59.2\%$$

$$\text{or } \frac{59.2}{100} \cdot 200 = 118.4 \text{ ml}_n\text{/min}$$

n means **normal conditons,**

at normal conditions volumes are converted to a temperature of 0°C and pressure of 1013,25 mbar. (760 Torr)

Note:
Best accuracy is always achieved by performing calibration under operating conditions. Should this not be possible or practical, then the use of a theoretical conversion factor is a welcome means to determine the flowrate of the instrument or the gas to be metered, however, it will introduce inaccuracies.

The approximate accuracy of the conversion factors listed is:

typical for conversion factors; > 1 **2% · factor**
< 1 **2% : factor**

However, as the accuracy of the factor also depends on the stability of viscosity, pressure and temperature, special attention should be taken for gases in the gas/liquid state where specific heat, density, and viscosity can vary tremendously. Apply to factory for more detailed information.

For gas mixtures a good approach is the following simplified equation:

$$\frac{1}{C_{mix}} = \frac{V_1}{C_1} + \frac{V_2}{C_2} + \ldots\ldots \frac{V_n}{C_n}$$

C_{mix} = Conversion factor for gasmixture
C_n = Conversion factor for gas n
V_n = Volumetric part of gas n in the mixture

Example: Gasmixture contains:

(1) 10% N_2	C1 = 1.00
(2) 30% Ar	C2 = 1.40
(3) 50% CH_4	C3 = 0.76
(4) 10% He	C4 = 1.41

$$\frac{1}{C_{mix}} = \frac{0.10}{1.00} + \frac{0.30}{1.40} + \frac{0.50}{0.76} + \frac{0.10}{1.41} = 1.043$$

Cmix = 0.959

When the original meter has been calibrated on 500 ml_n/min N_2, 100% means:

$$500 \cdot \frac{0.959}{1.00} = 480 \text{ ml}_n\text{/min mixture.}$$

When the original meter has been calibrated on 500 ml_n/min Argon, then 100% means:

$$500 \cdot \frac{0.959}{1.40} = 343 \text{ ml}_n\text{/min gas mixture}$$

1.7 Viscosity factor for D-instruments (large bore capillary)

Because of the low pressure drop across the laminar flow device flow disturbances can easy influence the accuracy and stability of the flow sensor. These flow disturbances are partly caused by pressure losses at in and outlet adaptors and the Reynolds number of the flow.
This results in the following selection table where the inner diameter of the connecting tubes and the adaptors limit the flow capacity of the flow meter.

Selection table

Model number	Max. flow l_n/min.	Tube size	Min. acceptable Inner diameter of tube mm	Standard adaptor bore (mm)
F-100D - F-200D	0.015	1/8"	0.3	2.3
F-101D - F-201D	1	1/8"	2.0	2.3
F-101D - F-201D	2	1/4" - 6 mm	2.8	4.8
F-101D - F-201D	5	1/4" - 6 mm	4.5	4.8
F-102D - F-202D	25	1/4" - 6 mm	4.6	4.8
F-102D - F-202D	30	1/2" - 12 mm	5.0	5.9
F-103D	50	1/2" - 12 mm	6.5	10.8
F-103D	100	1/2" - 12 mm	9.1	10.8
F-103D	100	3/4" - 20 mm	9.1	12.5

1.8 Selection of model number for D-instruments (large bore capillary)

Because all flow capacities are stated in air flow or Nitrogen. For other gases we have to select the air equivalent by use of
1. Conversion factor (see appendix 1)
2. Viscosity factor (see appendix 1)

Example 1:

Butane ; 1 l_n/min
Conversion factor = 0.25
Viscosity factor = 0.21
The air equivalent can be calculated with the

1. Conversion factor $\frac{1}{0.25} = 4.0\ l_n/min$

2. Viscosity factor $\frac{1}{0.21} = 4.76\ l_n/min$

We select F-101D/F-201D with 1/4" or 6 mm tube.

Example 2:

Chlorine ; 15 l_n/min
The calculated air equivalent flow is:

with conversion factor $\frac{15}{0.82} = 18.3\ l_n/min$

with viscosity factor $\frac{15}{0.45} = 33.3\ l_n/min$

Conversion factor determines F-102D, but viscosity factor F-103D with 1/2" or 12 mm tubing.
So select F-103D

1.9 Pressure losses for D-instruments (large bore capillary)

Pressure loss across a flow meter is caused by

1. Pressure loss across adaptors
2. Pressure loss across laminar flow device

The pressure loss across adaptor can be calculated by

$$\Delta p = 5 \cdot \frac{\Phi_{vn}^{\ 2}}{d^4} \cdot \frac{\rho_n}{P_2}$$

Δp	= pressure los	(mbar)
Φ_{vn}	= volume flow	(l_n/min)
ρ_n	= density	(kg/m$^3{}_n$)
P_2	= downstream pressure	(bara)
d	= innertube diameter	(mm)
	or inner adaptor diameter whichever is the smallest	

Example:

Φ_{vn} = 20 l_n/min air
d = 4.8 mm inner diameter 1/4" tube
ρ_n = 1.29 kg/m$^3{}_n$
P_2 = 1 bara

$$\Delta p = 5 \cdot \frac{20^2}{4.8^4} \cdot \frac{1.29}{1} = 4.9\ mbar$$

The pressure loss across laminar flow device is at max. flow for air 0.8 mbar at atmosferic conditions. For other gases use formula:

$$\Delta p_{act} = \frac{\mu_{act}}{\mu_{air}} \cdot \frac{0.8}{P_2}$$

(see appendix 1 for viscosities)

1.10 Pressure drop for F-106A - F-106D, F-116A, F-116B, F-107A - F-107D and F-117A - F-117D

This serie is equipped with a laminar flow element. The pressure drop for air is approx. 80 to 150 mbar at atmospheric pressure and temperature.

Note:
For the F-116A and F-116B the adaptors will raise the total pressure drop.
Consult factory for F-116 adaptor selection.

2 INSTALLATION

2.1 Receipt of equipment

Check the outside packing box for damage incurred during shipment. Should the packing box be damaged, then the local carrier must be notified at once regarding his liability, if so required. At the same time a report should be submitted to:

BRONKHORST HIGH-TECH B.V.
RUURLO HOLLAND

Remove the envelope containing the packing list; carefully remove the equipment from the packing box. Do not discard spare- or replacement parts with the packing material and inspect the contents for damaged or missing parts.

2.2 Return shipment

When returning material; always describe the problem and, if possible, the work to be done in a covering letter.

It is absolutely required to notify the factory if toxic or dangerous gases have been metered with the instrument!

This to enable the factory to take sufficient precautionary measures to safe-guard the staff in their repair department. Take proper care of packing; seal instrument in plastic etc.

Contaminated instruments must be dispatched with a completely filled in 'declaration on contamination form'.
Contaminated instruments without this declaration will not be accepted.

Note:
If the instruments have been used with toxic or dangerous gases the customer should pre-clean the instrument.

Important:
Clearly note, on the top of the package the custom clearance number of Bronkhorst HIGH-TECH B.V. namely:

NL 801989978B01

2.3 Service

If this equipment is not properly serviced, serious personal injury and/or damage to the equipment could be the result. It is therefore important that servicing is performed by trained and qualified service personnel.
BRONKHORST HIGH-TECH B.V. has a trained staff of servicemen available.

2.4 Mounting

The mounting position depends on the type of meter. The prefered position is horizontal and at high pressures all meters should be mounted in this position.
Avoid installation in close proximitry of mechanic vibration.
All D-type instruments should be mounted horizontally. Disturbances like bends, valves etc. will affect accuracy heavily, therefore follow the instructions in the table.

Handle the following rules:

Disturbance element	Free length "A"
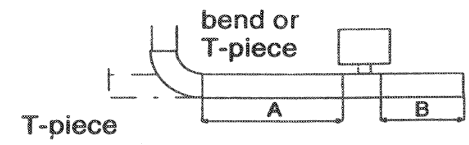	10D
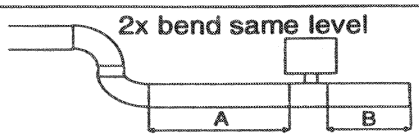	13D
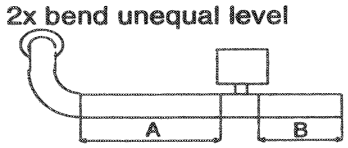	20D
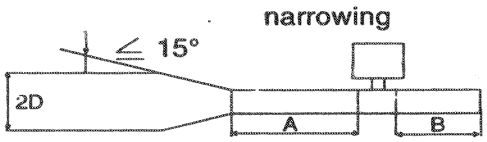	9D
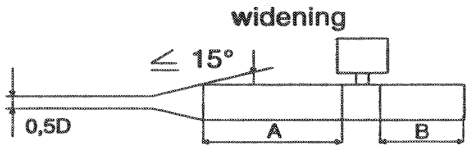	11D
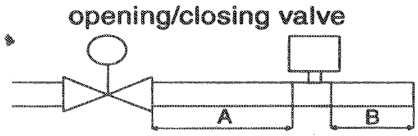	13D
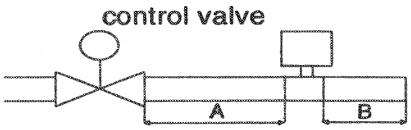	32D
B-side for all purposes, also for disturbance downstream the meter.	4D

D = pipe diameter

In general, flow straighteners have an suspicious influence on the free length of the meter.
A flow straightener can be imagined as a bundle of parallel tubes which is placed in the tube.

In general, these flow straighteners must be placed at least 6 to 8 D upstream of the meter.

In general, use a flow straightener in case of control valves and curves in unequal levels.

Next to these prescriptions for free length, the flow has to be steady, shock and pulsation free.
The flanges also must fit good to each other and there may not stick seals into the tube.

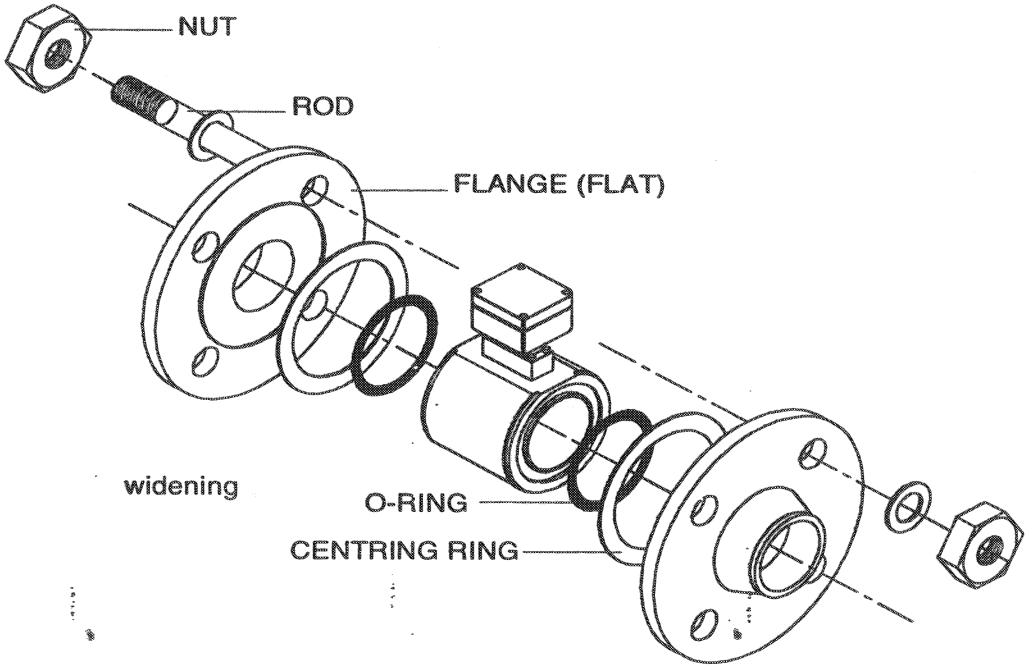

2.5 In-line filter

Although gases and piping should be absolutely free from dirt, oil, moisture and iron filings, it is recommended to install an in-line filter with filtersize less than 5 micron upstream of the flow meter, and if backflow can occur, a downstream filter is recommended too.

Note:
On the inlet of each low flow (C-type) meter/controller a screen is placed both to prevent foreign matter from entering the instrument and to maintain a good flow pattern. This screen **cannot** be seen as a filter element.
The high flow series F-106, F-116, F-107 and F-117 do not need this screen.

2.6 Gas connections

BRONKHORST HI-TEC series mass flow meters/controllers are standard equipped with compression fittings. For leak tight installation be sure that the tube is inserted to the shoulder in the fitting body and that no dirt or dust is present on tube, ferrules or fitting. Tighten the nut fingertight; while holding the fitting body with a backup wrench, tighten the nut 1¼ turn. Other types of fittings are available on request.

2.7 Piping

BE SURE THAT PIPING IS ABSOLUTELY CLEAN!
DO NOT install small diameter piping on high flowrates, because the inlet jetflow will affect the accuracy.
DO NOT mount abrupt angles direct on in- and outlet, especially not on high flowrate instruments. We recommend at least 10 pipe diameters distance between the angle and the instrument.
DO NOT mount pressure regulators direct on the inlet of flow meters/controllers, but allow some meters of piping. Special attention should be taken at high flowrates with flow controllers. An up- and downstream buffer is needed with a volume calculated according to the following formula:

$$V \geq \frac{0.15\, d^2}{\sqrt{\rho}}$$

in which:

V = volume in litres
d = orifice diameter in mm
ρ = density at normal conditions
$d = 7.6 \sqrt{K_v}$

Example:
Flow controller at 500 l_n/min Air and orifice diameter d = 4 mm, needs for stable control a buffer volume of:

$V \geq 0.15 \cdot 4^2 : \sqrt{1.29} = 2.1$ litres

Also the capacity of the pressure regulator should be at least 2 times the flow controller range, so in this case 2 · 500 = 1,000 l_n/min.

2.8 Electrical connections

BRONKHORST HIGH-TECH B.V. recommends to use standard cables, which have been tested together with the appropriate flow meter/controller. These cables have the right connector and if loose ends are used, these will be marked to prevent wrong connection.

2.9 Caution

Each flow meter/controller is pressure tested to at least 1.5 time the working pressure of the process conditions stipulated by the customer, with a minimum of 8 bar.
This tested pressure is stated on the flow meter/controller with a RED COLOURED sticker. Check test pressure before installing in the line.
If this sticker is **not** available or the test pressure is incorrect, the instrument should **not** be mounted in the process line and be returned to the factory.
Each instrument is helium leak tested to at least $2 \cdot 10^{-9}$ mbar l/s Helium.

2.10 Supply pressure

Do not apply pressure until electrical connections are made. When applying pressure to the system, take care to avoid pressure shocks in the system and increase pressure gradually, especially on high pressure units incorporating a membrane/piston operated control valve.

2.11 System purging

If explosive gases are going to be used, purge the process with inert dry gas like Nitrogen, Argon etc. for at least 30 minutes.
In systems with corrosive gases like silane, purging with an inert gas is absolutely necessary, because if the tubing has been exposed to air, introducing these gases will tend to clog up or corrode the system due to a chemical reaction with air or moist air.
Complete purging is also required to remove such gases from the system before exposing the system to air. It is prefered not to expose the system to air, when working with these corrosive gases.

2.12 Seals

BRONKHORST HI-TEC has gathered a material compatibility chart from a number of sources believed to be reliable.
However, it is a general guide only. Operating conditions may substantially change the accuracy of this guide. Therefore is no liability for damages accruing from the use of this guide.
The customers application demands its own specific design or test evaluation for optimum reliability.
So check if the seals like O-rings, plunger and packing gland of capillary are correct for your process.

2.13 Equipment storage

The equipment should be stored in its original packing in a cupboard warehouse or similar. Care should be taken not to subject the equipment to excessive temperatures or humidity.

2.14 Electromagnetic compatibility

2.14.1 Conditions for compliance with EMC requirements

All instruments described in this manual carry the CE-mark.
Therefore they have to comply with the EMC requirements as are valid for these kind of instruments.
However compliance with the EMC requirements is not possible without the use of proper cables and connector/gland assemblies.
For good results Bronkhorst HIGH-TECH B.V. can provide standard cables. Otherwise follow the guidelines as stated below.

1. Connector assembly

Fold the shield of the cable back over the cable (the shield must be around the cable).

Wind a copper tape around the shield.

Solder a black wire on the tape and connect to pin 9 of connector

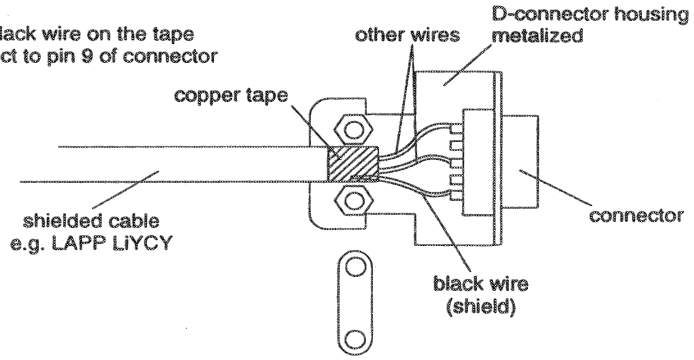

2. Cable gland assembly

Fold the shield of the cable back over the cable (shield must be around the cable).

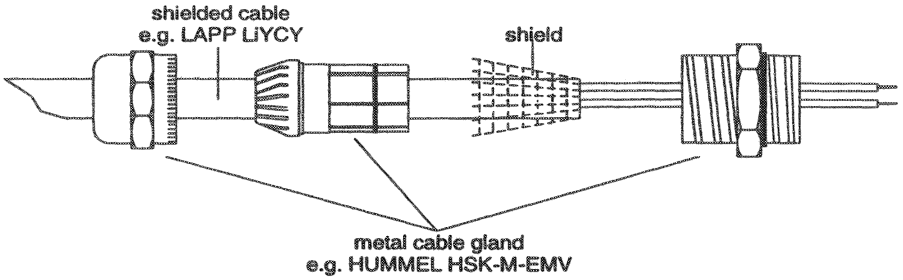

Mount the metal PG cable gland as shown in the drawing above.

3 OPERATION

3.1 General

The BRONKHORST HIGH-TECH B.V. Mass Flow Meters/Controllers are designed in such a way that they will meet user process requirements.

Basically Mass Flow Meters are powered with only + 15 Vdc (on request also each voltage between 15 Vdc and 24 Vdc) and have 3-wire shielded cable.
If Mass Flow Meters also have a controller circuitry they are powered with + 15 Vdc (or + 24 Vdc) and require a 6-wire shielded cable for common standard features.

3.2 Power and warm-up

Before switching on power check if you have connected all the pins according to the hook-up diagram which belongs to the flow meter/controller.
Check gas connections, and make sure there is no leakage and purge the system with proper gas. Turn on power and allow for at least 30 minutes to warm-up and stabilize. During warm-up period gas pressure may either be on or off.

3.3 Zeroing

After warm-up, with no gas flow, use the zero potentiometer, marked "L", to adjust the read out to read approx. 0.2%, if so required. For flow controllers setpoint should be zero.
The circuitry contains a threshold to prevent negative zerodrift. When adjustment is required, first make sure that there is a positive deviation and then slowly adjust the read out to read approx. 0.2%.

3.4 Start-up

Be sure your tubing is absolutely clean, free of dust, moisture etc., and your gas is cleaned by an adequate filter. Then turn on gas supply and set flow at approx. 10%.
Avoid pressure shocks, but bring the instrument gradually up to the level of operating conditions.

3.5 Operating conditions

Each flow meter/controller has been calibrated and adjusted for customer process conditions.
Controllers can't operate trouble free, if process conditions vary too much, because of the restriction of the orifice in the control valve.
Mass flow controllers are suitable for installation in vacuum systems to control against vacuum.
The performance may be affected by changing process conditions, e.g. the sensor should not be operated below 200 mbara, because physical gas properties such as heat capacity, viscosity etc. will rapidly change and so will the calibration curve.

For air, the error follows the expression:

$$\boxed{\text{error} = \frac{1.5 - (1.5 \cdot p)}{p} \ \%}$$

in which: p = pressure in bara

example: p = 0.2 bara

$$\text{error} = \frac{1.5 - (1.5 \cdot 0.2)}{0.2} = 6\ \%\ \text{of reading}$$

3.6 Flow performance

3.6.1 Flow sensor

The time constant of a flow sensor is defined as follows:
time constant = time for the flow signal to reach 63,2 % after a stepchange; five time constants give the 100% flow signal.

Each flow sensor has a time constant of approx. 5-8 seconds, which can be electronically sped up to approx. 1-3 seconds.

We recommend not to select the time constant too fast, because the flow signal then becomes very sensitive for flow changes, which gives a constantly varying flow signal.

3.6.2 Flow controller

The dynamic response characteristic of the controller is factory set. Standard settling time is defined as the time to reach the final setpoint within ± 2% from the initial setpoint.
The control mode is factory set in such a way that after a stepchange, there will hardly be no overshoot.

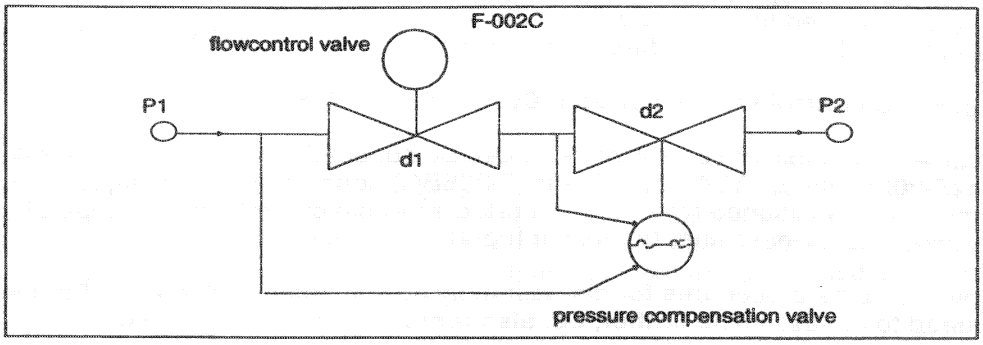

Principle of operation F-033C

4.4.6 Maximum allowable pressure drop series F-001AC and F-002C control valves

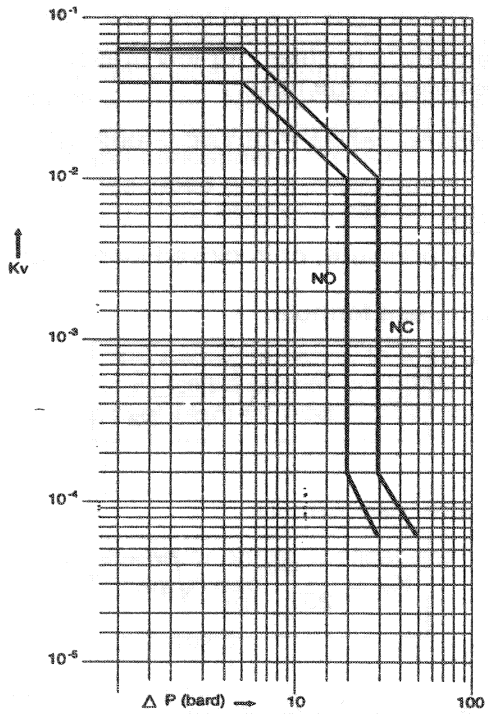

4.4.7 Maximum and minimum allowable pressure drop series F-002AC/F-003AC and F-003BC control valves

The maximum pressure drop is limited to 20 bard. If the upstream pressure is more than 20 bara for instance 40 bara, it is preferable to install a bypass valve. During start-up this valve should be opened to prevent too high a pressure drop.
The minimum pressure drop is limited by the internal spring at the membrane and the calculated K_v value.
For series F-002AC the $K_{v\ max.}$= 0.4 and the min. required pressure drop varies between 1.3 and 2 bard.
For series F-003AC the K_v max.= 1.5 and the min. required pressure drop varies between 1.6 and 2 bard.
For series F-003BC the K_v max. = 6.0 and the min. required pressure drop varies between 1.4 and 2.2 bard.

4.5 Calibration procedure

All flow meters are factory calibrated. This procedure is for reranging or recalibration only.

Calibration of the Flow Meter/Controller requires the use of a digital voltmeter and an accurate calibration device.

4.5.1 Procedure for Industrial style Sensor/Controller

a) apply power to the system and allow approx. 60 minutes for the instrument to warm up and stabilize
b) turn on gas supply and check system on operation
c) remove upper half of cover during adjustment
d) connect the DVM to the output signal
e) adjust potmeter 'L' till 0% flow reads 0.010 Vdc output, while disconnecting gas supply
f) adjust potmeter 'H' till 100% flow reads 5.000 Vdc output
g) adjust potmeter 'M' till 50% flow reads 2.500 Vdc output
h) repeat steps 'e thru g' till the deviation between the adjusted and desired values are smaller than 0.5% F.S.

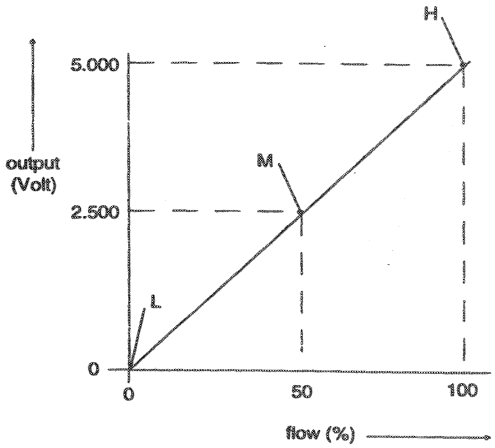

Note:
While repeating steps 'e thru g' mind that:
a) potmeters 'H' and 'M' can be adjusted without shifting of 'L'
b) adjusting potmeter 'L' automatically results in a corresponding shift in the positions of potmeters 'H' and 'M'
c) potmeter 'M' can be adjusted without shifting the positions of potmeters 'L' and 'H'.

4.6 P.C. board lay-out Industrial style

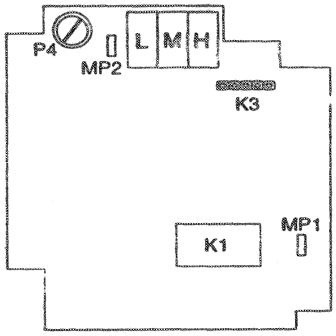

Sensor board

K1	:	System connection
K3	:	Capillary
MP1	:	0 Vdc/common
MP2	:	Output signal 0 - 5 V normal response
P4	:	Controls the output differentiating network. This determines the dynamic response of the instrument.

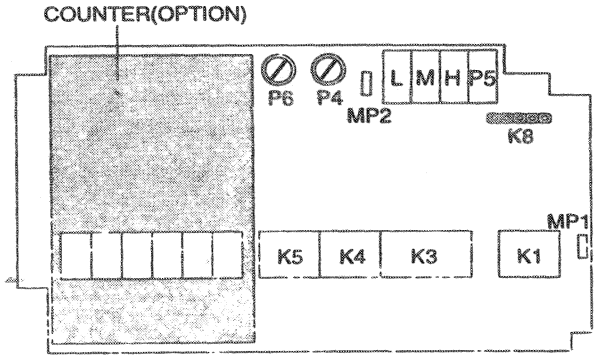

Controller board

K1, K3, K4, K5	:	System connection
K8	:	Capillary
MP1	:	0 Vdc/common
MP2	:	Output signal 0 - 5 V normal response
P4	:	Controls the output differentiating network. This determines the dynamic response of the instrument.
P6	:	Controls the D-action of the control circuit
P5	:	Adjustment Vref (setpoint 100%)

P4, P5 and P6 are factory adjusted.
Adjusting P5 will not change response.

5 TROUBLESHOOTING

5.1 General

For a correct analysis of the proper operation of a mass flow meter/controller it is recommended to remove the unit from the process line and to check it without applying gas supply pressure. In case the unit is dirty, this can be ascertained immediately by loosening the compression type couplings and, if applicable, the flange on the inlet side. Furthermore remove the top half of the cover and check if the jumpers are in the correct positions, and whether the miniature valve connector is fixed properly. Energizing or de-energizing of the instrument indicates whether there is an electronic failure. After that gas pressure is to be applied in order to check flow behaviour.
If there should be suspicion of leakage do not check for bubbles with a leak detection liquid (snoopy) under the cover as this may lead to a short-circuit in the sensor capillary assembly and p.c. board.

5.2 Troubleshooting summary

Symptom	Possible cause	Action
No output signal	No power supply	1a) check power supply
		1b) check cable connection
	Output stage blown-up due to long lasting shortage and/or high voltage peaks	1c) return to factory
	Supply pressure too high, or differential pressure across meter too high	1d) lower supply pressure
	Valve blocked/contaminated	1e) connect 0 ... 15Vdc to valve and slowly increase voltage while supply pressure is 'on'. The valve should open at 7V ± 3V; if not open, then clean inner parts and adjust valve (qualified personnel only)
	Screen in inlet fitting blocked	1f) clean screen with tri-chlorethylene or freon
	Sensor/capillary failure	1g) return to factory
Maximum output signal	Output stage blown-up	2a) return to factory
	Sensor/capillary failure	2b) return to factory
Output signal much lower than setpoint signal or desired flow	Screen blocked/contaminated	3a) clean screen
	LFD blocked/contaminated and/or liquid in meter	3b) remove LFD and clean; dry meter with air or N_2
	Valve blocked/contaminated	3c) clean valve
	Valve internals damaged (swollen seat in plunger)	3d) replace plunger assembly and adjust valve or return
	Incorrect type of gas is used and/or pressure/diff. pressure	3e) try instrument on conditions for which it was designed
Flow is gradually decreasing	Condensation, occurs with NH_3, hydro-carbons such as C_3H_8, C_4H_{10} etc.	4a) decrease supply pressure and/or heat gas to be metered
	Valve adjustment has changed	4b) see '1e'
Oscillation	Supply pressure/diff. pressure too high	5a) lower pressure
	Pipeline too short between pressure regulator and MFC	5b) increase length or diameter of piping upstream
	Pressure regulator is oscillating	5c) replace pressure regulator or try '5b'
	Valve sleeve or internals damaged	5d) replace damaged parts and adjust valve, see '1e' or return to factory
	Controller adjustment wrong	5e) adjust controller
Small flow at zero setpoint	Valve leaks due to damaged plunger or dirt in orifice	6a) clean orifice and/or, when replacing plunger assembly see '1e'
	Pressure too high or much too low	6b) apply correct pressure
High flow at zero setpoint	Damaged diaphragm (only applicable to valves with membrane)	7a) replace membrane seal

APPENDIX 1

GAS CONVERSION TABLE
AND
VISCOSITY FACTOR TABLE

GAS CONVERSION FACTOR

Nr.:	Name:	Symbol	Density ρ_n [g/l] 0°C, 1 atm.	Heat capacity* c_p-cal [cal/g.K] 20°C, 1atm.	Conversion factor 20°C, 1atm.
1	Acetylene (Ethyne)	C_2H_2	1.172	0.438	0.61
2	Air	Air	1.293	0.241	1.00
3	Allene (Propadiene)	C_3H_4	1.832	0.392	0.43
4	Ammonia	NH_3	0.7693	0.542	0.77
5	Argon	Ar	1.784	0.125	1.40
6	Arsine	AsH_3	3.524	0.133	0.66
7	Boron trichloride	BCl_3	5.227	0.136	0.44
8	Boron trifluoride	BF_3	3.044	0.188	0.54
9	Bromine pentafluoride	BrF_5	7.803	0.156	0.26
10	Butadiene (1,3-)	C_4H_6	2.504	0.405	0.31
11	Butane	C_4H_{10}	2.705	0.457	0.25
12	Butene (1-)	C_4H_8	2.581	0.415	0.29
13	Butene (2-) (Cis)	C_4H_8	2.503	0.387	0.32
14	Butene (2-) (Trans)	C_4H_8	2.503	0.421	0.30
15	Carbonylfluoride	COF_2	2.983	0.194	0.54
16	Carbonylsulfide	COS	2.724	0.175	0.65
17	Carbon dioxide	CO_2	1.977	0.213	0.74
18	Carbon disulfide	CS_2	3.397	0.152	0.60
19	Carbon monoxide	CO	1.25	0.249	1.00
20	Chlorine	Cl_2	3.218	0.118	0.82
21	Chlorine trifluoride	ClF_3	4.125	0.188	0.40
22	Cyanogen	C_2N_2	2.376	0.275	0.48
23	Cyanogen chloride	ClCN	2.743	0.185	0.61
24	Cyclopropane	C_3H_6	1.919	0.374	0.43
25	Deuterium	D_2	0.1798	1.73	1.00
26	Diborane	B_2H_6	1.248	0.577	0.43
27	Dibromo difluoromethane	Br_2CF_2	9.361	0.17	0.20
28	Dichlorosilane	SiH_2Cl_2	4.506	0.17	0.41
29	Dimethylamine	C_2H_6NH	2.011	0.417	0.37
30	Dimethylpropane (2,2-)	C_5H_{12}	3.219	0.462	0.21
31	Dimethylether	C_2H_6O	2.105	0.378	0.39
32	Disilane	Si_2H_6	2.857	0.352	0.31
33	Ethane	C_2H_6	1.355	0.468	0.49
34	Ethylene (Ethene)	C_2H_4	1.261	0.414	0.60
35	Ethylene oxide	C_2H_4O	1.965	0.303	0.52
36	Ethylacetylene (1-Butyne)	C_4H_6	2.413	0.401	0.32
37	Ethylchloride	C_2H_5	2.878	0.263	0.41
38	Fluorine	ClF_2	1.696	0.201	0.91
39	Freon-11	CCl_3F	6.129	0.145	0.35
40	Freon-113	$C_2Cl_3F_3$	8.36	0.174	0.21
41	Freon-1132A	$C_2H_2F_2$	2.887	0.244	0.44
42	Freon-114	$C_2Cl_2F_4$	7.626	0.177	0.23
43	Freon-115	C_2ClF_5	7.092	0.182	0.24
44	Freon-116	C_2F_6	6.251	0.2	0.25
45	Freon-12	CCl_2F_2	5.547	0.153	0.37
46	Freon-13	$CClF_3$	4.72	0.165	0.40
47	Freon-13B1	$CBrF_3$	6.768	0.12	0.38
48	Freon-14	CF_4	3.946	0.18	0.44
49	Freon-21	$CHCl_2F$	4.592	0.154	0.44
50	Freon-22	$CHClF_2$	3.936	0.168	0.47
51	Freon-23	CHF_3	3.156	0.191	0.52
52	Freon-C318	C_4F_8	9.372	0.222	0.15
53	Germane	GeH_4	3.45	0.16	0.56

* c_p-cal (T,p) = c_p (T + 50°C, p)

GAS CONVERSION FACTOR

Nr.:	Name:	Symbol	Density ρ_n [g/l] 0°C, 1 atm.	Heat capacity* c_p-cal [cal/g.K] 20°C, 1atm.	Conversion factor 20°C, 1atm.
54	Helium	He	0.1785	1.24	1.41
55	Helium (3-)	3He	0.1346	1.606	1.44
56	Hydrogen	H_2	0.08991	3.44	1.01
57	Hydrogen bromide	HBr	3.646	0.0869	0.98
58	Hydrogen chloride	HCl	1.639	0.192	0.99
59	Hydrogen cyanide	HCN	1.206	0.345	0.75
60	Hydrogen fluoride	HF	0.8926	0.362	0.96
61	Hydrogen iodide	HI	5.799	0.0553	0.97
62	Hydrogen selenide	H_2Se	3.663	0.109	0.78
63	Hydrogen sulfide	H_2S	1.536	0.246	0.82
64	Isobutane	C_4H_{10}	2.693	0.457	0.25
65	Isobutylene (Isobutene)	C_4H_8	2.60	0.429	0.28
66	Krypton	Kr	3.749	0.058	1.43
67	Methane	CH_4	0.7175	0.568	0.76
68	Methylacetylene	C_3H_4	1.83	0.399	0.43
69	Methylbromide	CH_3Br	4.35	0.118	0.61
70	Methylchloride	CH_3Cl	2.3	0.212	0.64
71	Methylfluoride	CH_3F	1.534	0.29	0.70
72	Methylmercaptan	CH_3SH	2.146	0.272	0.53
73	Molybdenum hexafluoride	MoF_6	9.366	0.156	0.21
74	Mono-ethylamine	$C_2H_5NH_2$	2.011	0.436	0.36
75	Monomethylamine	CH_3NH_2	1.419	0.424	0.52
76	Neon	Ne	0.9002	0.246	1.41
77	Nitric oxide	NO	1.34	0.239	0.97
78	Nitrogen	N_2	1.250	0.249	1.00
79	Nitrogen dioxide	NO_2	2.053	0.204	0.74
80	Nitrogen trifluoride	NF_3	3.182	0.194	0.50
81	Nitrosyl chloride	NOCl	2.984	0.17	0.61
82	Nitrous oxide	N_2O	1.978	0.221	0.71
83	Oxygen	O_2	1.429	0.222	0.98
84	Oxygen difluoride	OF_2	2.417	0.201	0.64
85	Ozone	O_3	2.154	0.207	0.70
86	Pentane	C_5H_{12}	3.219	0.455	0.21
87	Perchlorylfluoride	ClO_3F	4.653	0.165	0.41
88	Perfluoropropane	C_3F_8	8.662	0.22	0.16
89	Performa- ethylene	C_2F_4	4.523	0.206	0.33
90	Phosgene	$COCl_2$	4.413	0.149	0.47
91	Phosphine	PH_3	1.53	0.277	0.73
92	Phosphorous pentafluoride	PF_5	5.694	0.183	0.30
93	Propane	C_3H_8	2.012	0.456	0.34
94	Propylene (Propene)	C_3H_6	1.915	0.408	0.40
95	Silane	SiH_4	1.443	0.349	0.62
96	Silicon tetrafluoride	SiF_4	4.683	0.18	0.37
97	Sulfurylfluoride	SO_2F_2	4.631	0.175	0.38
98	Sulfur dioxide	SO_2	2.922	0.157	0.68
99	Sulfur hexafluoride	SF_6	6.626	0.175	0.27
100	Sulfur tetrafluoride	SF_4	4.821	0.18	0.34
101	Trichlorosilane	$SiHCl_3$	6.044	0.157	0.33
102	Trimethylamine	C_3H_9N	2.637	0.424	0.28
103	Tungsten hexafluoride	WF_6	13.29	0.092	0.25
104	Vinylbromide	C_2H_3Br	4.772	0.141	0.46
105	Vinylchloride	C_2H_3Cl	2.865	0.229	0.47
106	Vinylfluoride	C_2H_3F	2.08	0.305	0.49
107	Xenon	Xe	5.899	0.0382	1.38

* c_p-cal (T,p) = c_p (T - 50°C, p)

VISCOSITY FACTOR TABLE

Nr.:	Name:	Symbol	Density ρ_n [g/l] 0°C, 1 atm.	Viscosity factor 20°C, 1 atm.	Viscosity μ [10^{-6} Pa.s] 20°C, 1 atm.
1	Acetylene (Ethyne)	C_2H_2	1.172	0.61	9.93
2	Air	Air	1.293	1.00	18.1
3	Allene (Propadiene)	C_3H_4	1.832	0.36	8.28
4	Ammonia	NH_3	0.7693	0.86	10.3
5	Argon	Ar	1.784	1.08	22.6
6	Arsine	AsH_3	3.524	0.42	15.5
7	Boron trichloride	BCl_3	5.227	0.23	10.8
8	Boron trifluoride	BF_3	3.044	0.44	16.4
9	Bromine pentafluoride	BrF_5	7.803	0.20	18.1
10	Butadiene (1,3-)	C_4H_6	2.504	0.25	7.77
11	Butane	C_4H_{10}	2.705	0.21	7.32
12	Butene (1-)	C_4H_8	2.581	0.24	7.55
13	Butene (2-) (Cis)	C_4H_8	2.503	0.25	7.5
14	Butene (2-) (Trans)	C_4H_8	2.503	0.24	7.48
15	Carbonylfluoride	COF_2	2.983	0.46	17.3
16	Carbonylsulfide	COS	2.724	0.43	12.2
17	Carbon dioxide	CO_2	1.977	0.60	14.5
18	Carbon disulfide	CS_2	3.397	0.31	9.71
19	Carbon monoxide	CO	1.25	0.97	16.6
20	Chlorine	Cl_2	3.218	0.45	13.6
21	Chlorine trifluoride	ClF_3	4.125	0.29	13.7
22	Cyanogen	C_2N_2	2.376	0.35	9.58
23	Cyanogen chloride	ClCN	2.743	0.42	12.6
24	Cyclopropane	C_3H_6	1.919	0.36	8.6
25	Deuterium	D_2	0.1798	2.14	11.5
26	Diborane	B_2H_6	1.248	0.43	7.44
27	Dibromo difluoromethane	Br_2CF_2	9.361	0.13	12.9
28	Dichlorosilane	SiH_2Cl_2	4.506	0.31	16.3
29	Dimethylamine	C_2H_6NH	2.011	0.31	7.59
30	Dimethylpropane (2,2-)	C_5H_{12}	3.219	0.18	7.19
31	Dimethylether	C_2H_6O	2.105	0.33	8.62
32	Disilane	Si_2H_6	2.857	0.35	16
33	Ethane	C_2H_6	1.355	0.49	9.19
34	Ethylene (Ethene)	C_2H_4	1.261	0.58	10.1
35	Ethylene oxide	C_2H_4O	1.965	0.41	9.51
36	Ethylacetylene (1-Butyne)	C_4H_6	2.413	0.26	7.75
37	Ethylchloride	C_2H_5	2.878	0.29	9.04
38	Fluorine	ClF_2	1.696	0.96	23.8
39	Freon-11	CCl_3F	6.129	0.18	10.17
40	Freon-113	$C_2Cl_3F_3$	8.36	0.13	10.8
41	Freon-1132A	$C_2H_2F_2$	2.887	0.37	13.4
42	Freon-114	$C_2Cl_2F_4$	7.626	0.15	11.4
43	Freon-115	C_2ClF_5	7.092	0.17	12.9
44	Freon-116	C_2F_6	6.251	0.20	14.7
45	Freon-12	CCl_2F_2	5.547	0.22	12.4
46	Freon-13	$CClF_3$	4.72	0.28	14.7
47	Freon-13B1	$CBrF_3$	6.768	0.23	15.6
48	Freon-14	CF_4	3.946	0.37	18.1
49	Freon-21	$CHCl_2F$	4.592	0.25	11.2
50	Freon-22	$CHClF_2$	3.936	0.31	13
51	Freon-23	CHF_3	3.156	0.39	14.23
52	Freon-C318	C_4F_8	9.372	0.11	11.46
53	Germane	GeH_4	3.45	n.a.	n.a.

n.a. = not available

VISCOSITY FACTOR TABLE

Nr.:	Name:	Symbol	Density ρ_n [g/l] 0°C, 1 atm.	Viscosity factor 20°C, 1 atm.	Viscosity μ [10^{-6} Pa.s] 20°C, 1 atm.
54	Helium	He	0.1785	3.36	20
55	Helium (3-)	3He	0.1346	3.91	20
56	Hydrogen	H_2	0.08991	2.66	8.82
57	Hydrogen bromide	HBr	3.646	0.53	18.1
58	Hydrogen chloride	HCl	1.639	0.77	15.1
59	Hydrogen cyanide	HCN	1.206	0.53	7.21
60	Hydrogen fluoride	HF	0.8926	0.95	11.8
61	Hydrogen iodide	HI	5.799	0.40	17.7
62	Hydrogen selenide	H_2Se	3.663	0.45	16.1
63	Hydrogen sulfide	H_2S	1.536	0.64	11.7
64	Isobutane	C_4H_{10}		0.22	7.35
65	Isobutylene (Isobutene)	C_4H_8	2.693	0.23	7.58
66	Krypton	Kr		0.75	25.7
67	Methane	CH_4	2.60	0.91	11
68	Methylacetylene	C_3H_4		0.36	8.35
69	Methylbromide	CH_3Br	3.749	0.32	13.03
70	Methylchloride	CH_3Cl	0.7175	0.44	11.2
71	Methylfluoride	CH_3F		0.68	14.3
72	Methylmercaptan	CH_3SH	1.83	0.39	9.41
73	Molybdenum hexafluoride	MoF_6		n.a.	n.a.
74	Mono-ethylamine	$C_2H_5NH_2$	4.35	0.30	7.74
75	Monomethylamine	CH_3NH_2		0.44	7.82
76	Neon	Ne	2.3	1.86	31
77	Nitric oxide	NO		0.98	18.4
78	Nitrogen	N_2	1.534	1.00	17.5
79	Nitrogen dioxide	NO_2	2.146	0.55	13
80	Nitrogen trifluoride	NF_3	9.366	0.43	17
81	Nitrosyl chloride	NOCl	2.011	0.38	11.6
82	Nitrous oxide	N_2O	1.419	0.59	14.3
83	Oxygen	O_2	0.9002	1.00	20.2
84	Oxygen difluoride	OF_2		0.58	18.15
85	Ozone	O_3	1.34	0.56	14.7
86	Pentane	C_5H_{12}		0.18	7.06
87	Perchlorylfluoride	ClO_3F	1.250	0.29	14.89
88	Perfluoropropane	C_3F_8	2.053	0.13	13.16
89	Performa- ethylene	C_2F_4	3.182	0.26	14.05
90	Phosgene	$COCl_2$	2.984	0.27	11.2
91	Phosphine	PH_3	1.978	0.60	11.15
92	Phosphorous pentafluoride	PF_5	1.429	n.a.	n.a.
93	Propane	C_3H_8	2.417	0.31	8.08
94	Propylene (Propene)	C_3H_6	2.154	0.35	8.6
95	Silane	SiH_4	3.219	0.59	11.4
96	Silicon tetrafluoride	SiF_4	4.653	n.a.	n.a.
97	Sulfurylfluoride	SO_2F_2	8.662	n.a.	n.a.
98	Sulfur dioxide	SO_2	4.523	0.43	12.8
99	Sulfur hexafluoride	SF_6		0.20	15.5
100	Sulfur tetrafluoride	SF_4	4.413	n.a.	n.a.
101	Trichlorosilane	$SiHCl_3$		n.a.	n.a.
102	Trimethylamine	C_3H_9N	1.53	0.23	7.31
103	Tungsten hexafluoride	WF_6		0.14	17.54
104	Vinylbromide	C_2H_3Br	5.694	n.a.	n.a.
105	Vinylchloride	C_2H_3Cl	2.012	0.33	10.3
106	Vinylfluoride	C_2H_3F	1.915	0.43	11.4
107	Xenon	Xe	1.443	0.54	23.5
			4.683		

n.a. = not available

APPENDIX 2

DIMENSIONAL DRAWINGS

Note: dimensions subject to change without notice.

Valves

F-001AC/F-011AC Ind.
F-002AC/F-012AC Ind.
F-003AC/F-013AC Ind.
F-003BC/F-013BC Ind.
F-033C Ind.
F-004BC

Sensors

F-101I
F-102I
F-103I
F-112AI
F-113AI
F-122I/F-132I
F-123AI/F-133AI
F-106A/F-106B/F-106C/F-106D
F-116A
F-116B
F-107A/F-107B/F-107C/F-107D with DIN and ANSI Flanges
F-117A/F-117B/F-117C/F-117D

Controllers

F-206AC
F-206BC

Filters

M-410/M-411/M-422/M-423

Some possible combinations

F-112AI + F-001AC Ind.
F-112AI + F-002AC Ind.
F-132I + F-033C Ind.

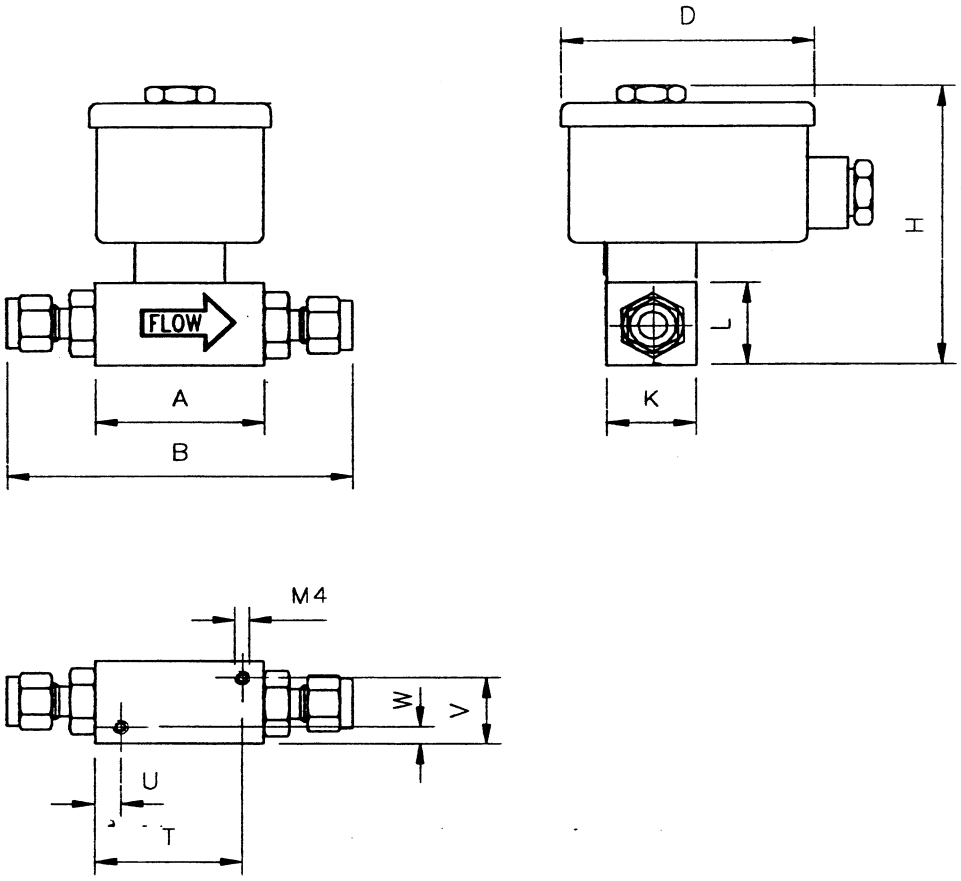

A	B	D	H	K	L	T	U	V	W
47	97	80	83	25	25	42	5	20	5

.216A

F-001AC/F-011AC Ind.

Recommended spare parts:

Valve assembly
Set of O-Rings
Fittings
Coil

Note: For spare parts always indicate serial number and model number of the instrument.

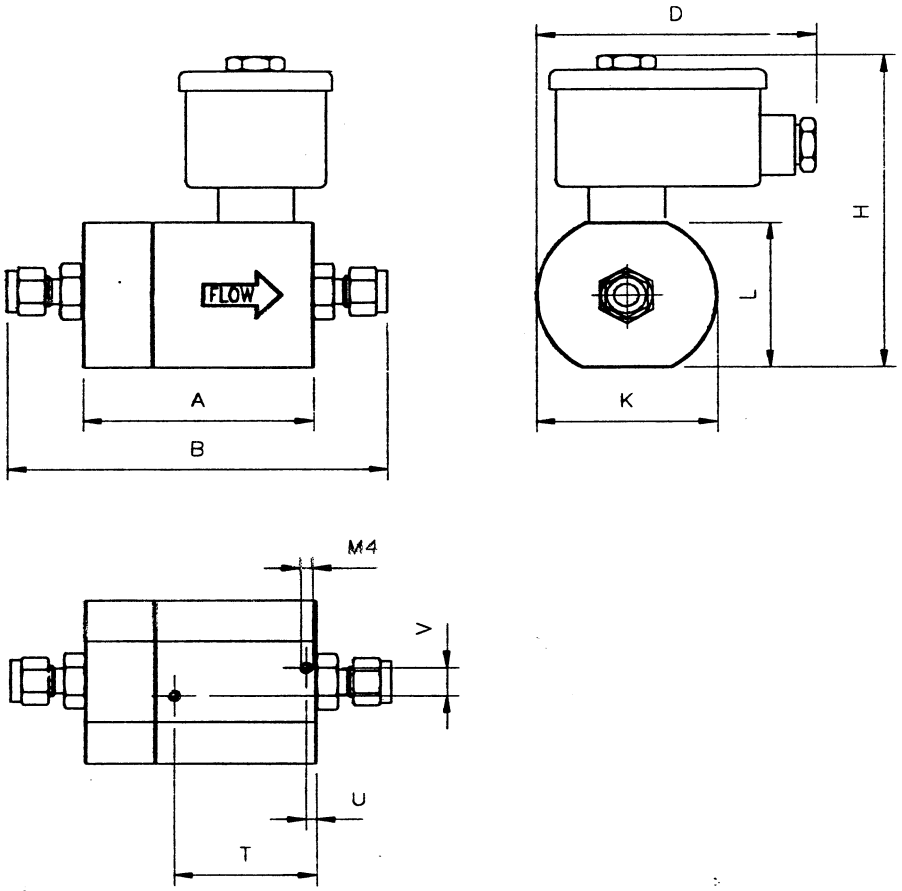

A	B	D	H	K	L	T	U	V
78	128	90	109	59	53	50	5	15

.206A

F-002AC/F-012AC Ind.

Recommended spare parts:

Pilot valve assembly
Membrane valve assembly
Pressure valve assembly
Set of O-Rings
Fittings
Coil

Note: For spare parts always indicate serial number and model number of the instrument.

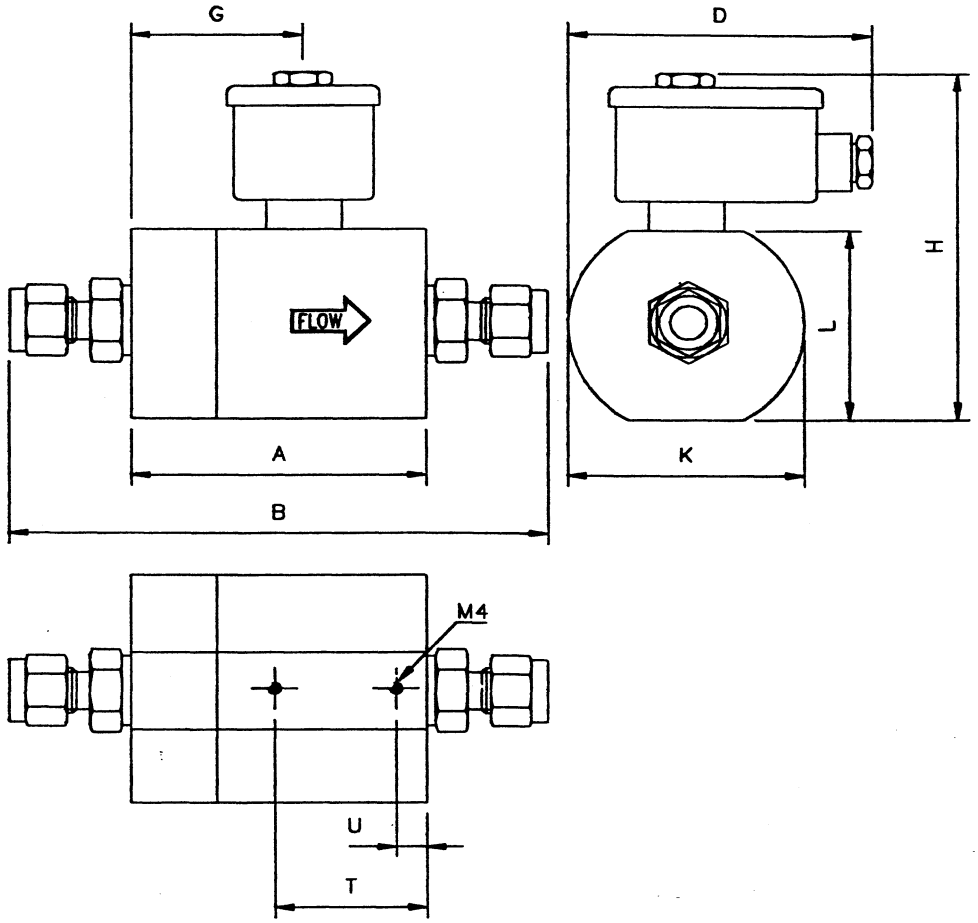

A	B	D	G	H	K	L	T	U
97	166	97	57	126	74	67	50	10

.252A

F-003AC/F-013AC Ind.

Recommended spare parts:

Pilot valve assembly
Pressure valve assembly
Set of O-Rings
Fittings
Coil

Note: For spare parts always indicate serial number and model number of the instrument.

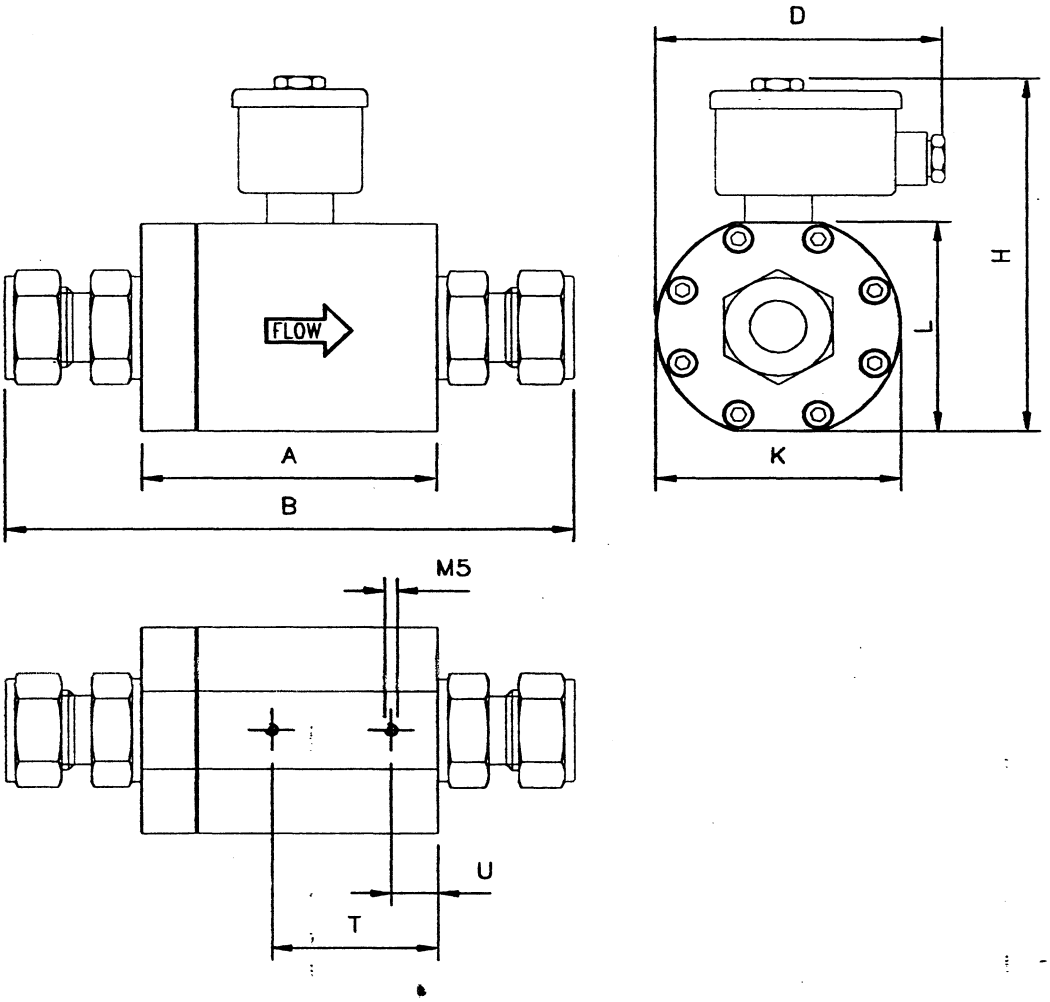

A	B	D	H	K	L	T	U
114	203	105	140	89	84	60	13

.236A

F-003BC/F-013BC Ind.

Recommended spare parts:

Pilot valve assembly
Pressure valve assembly
Set of O-Rings
Fittings
Coil

Note: For spare parts always indicate serial number and model number of the instrument.

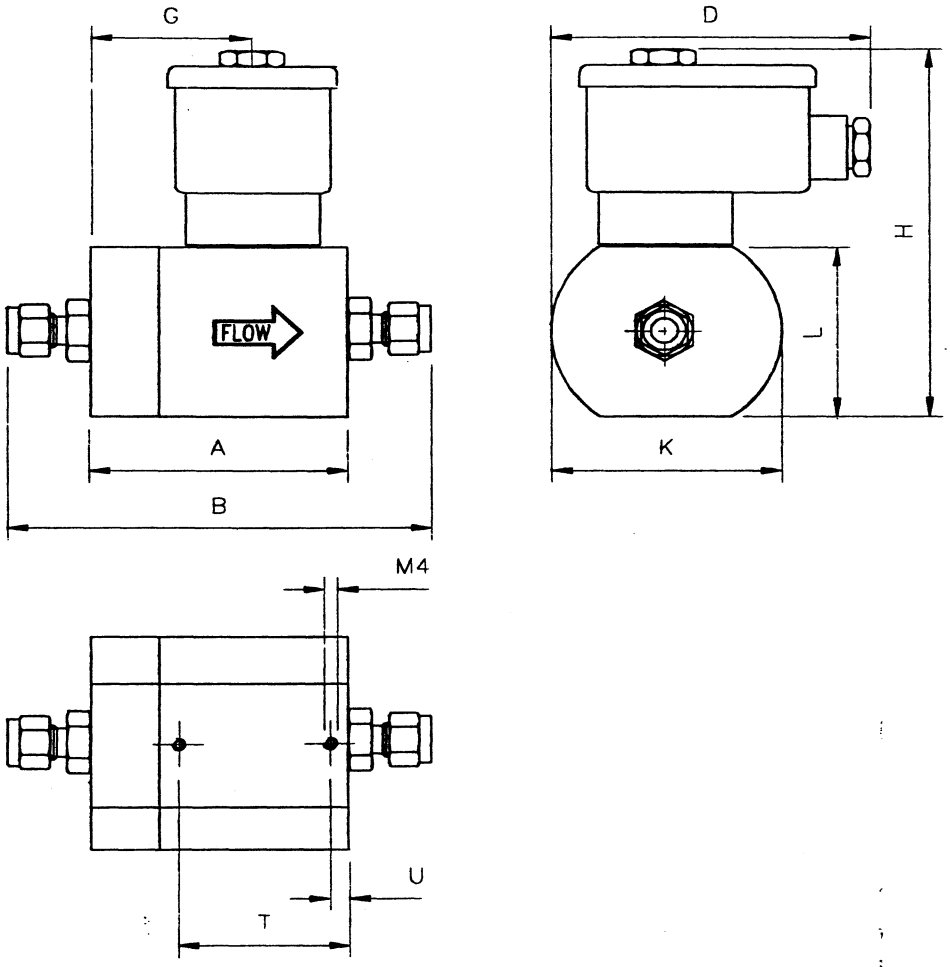

A	B	D	G	H	K	L	T	U
77	127	117	49	111	69	55	47	5

.110B

F-033C Ind.

Recommended spare parts:

Valve assembly
Pressure valve assembly
Set of O-Rings
Fittings
Coil

Note: For spare parts always indicate serial number and model number of the instrument.

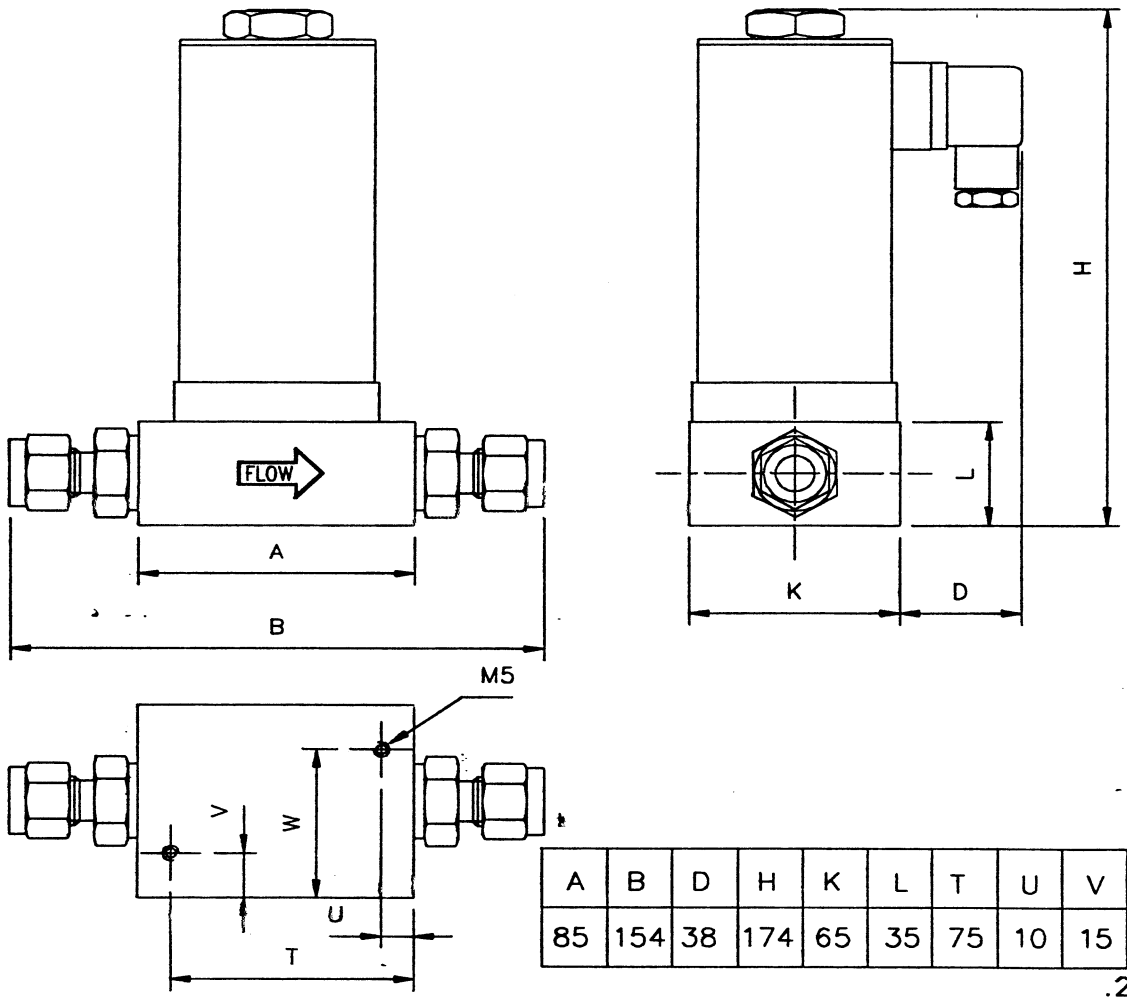

A	B	D	H	K	L	T	U	V	W
85	154	38	174	65	35	75	10	15	50

.286A

F-004BC

Recommended spare parts:

Fittings with O-Rings

Note: For spare parts always indicate serial number and model number of the instrument.

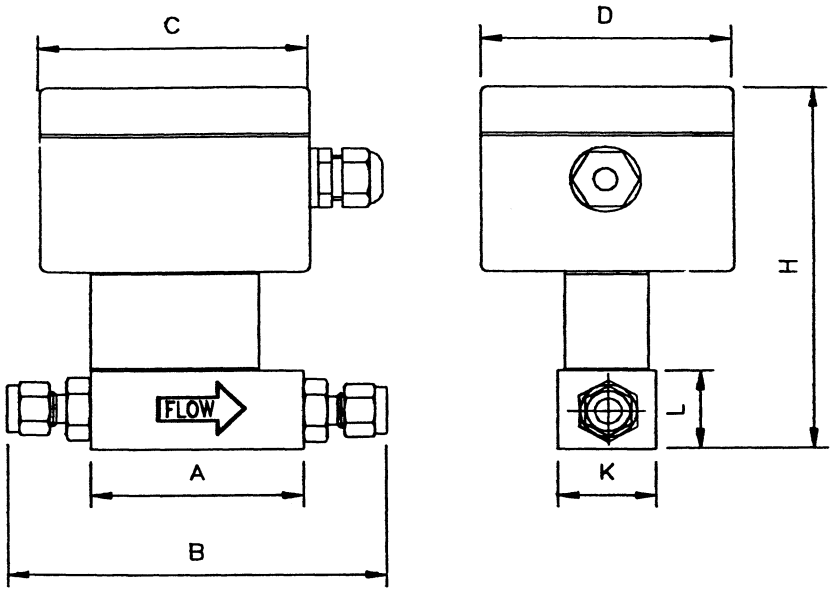

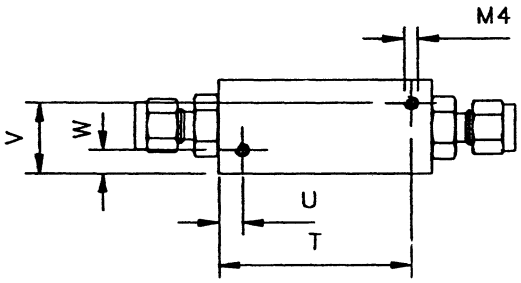

A	B	C	D	H	K	L	T	U	V	W
65	115	80	75	117	30	25	60	5	25	5

.114D

F-101I

Recommended spare parts:

P.C.board
Capillary assembly
Laminar flow element
Set of O-Rings
Fittings

Note: For spare parts always indicate serial number and model number of the instrument.

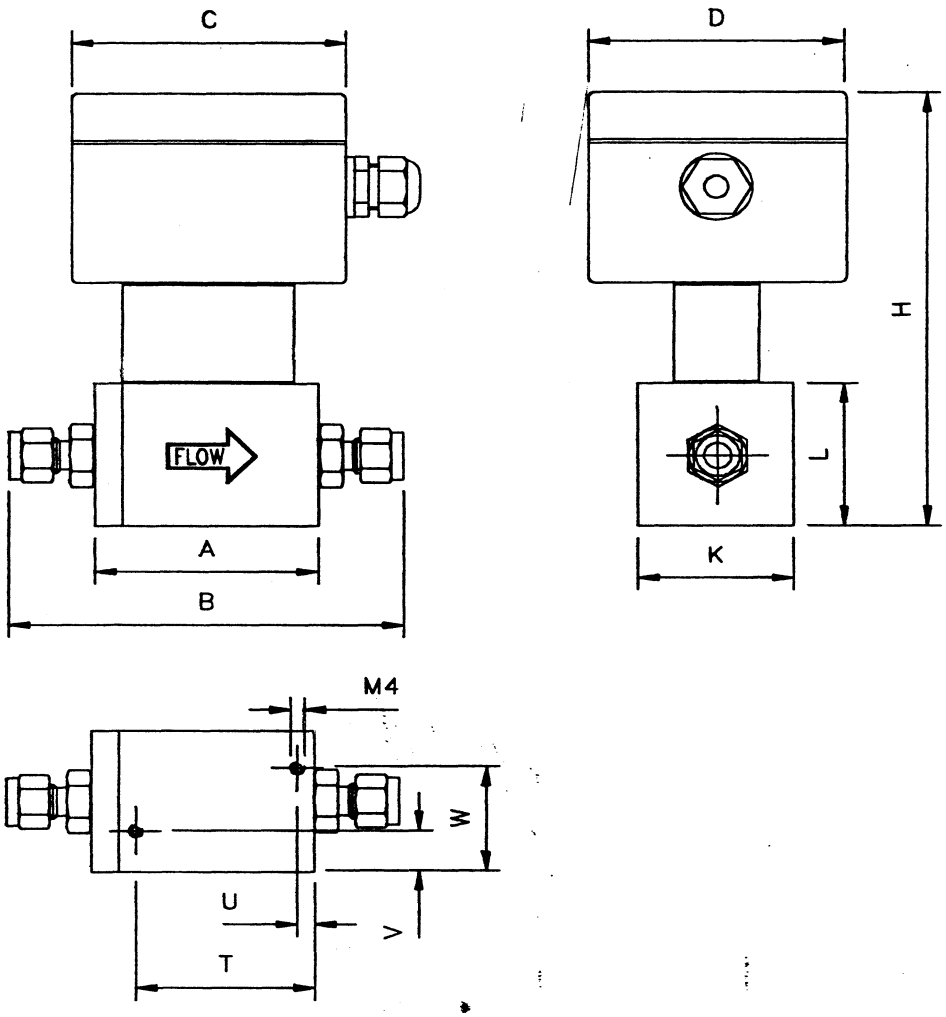

A	B	C	D	H	K	L	T	U	V	W
65	115	80	75	137	45	45	52	5	12	33

.079D

F-102I

Recommended spare parts:

P.C.board
Capillary assembly
Laminar flow element
Set of O-Rings
Fittings

Note: For spare parts always indicate serial number and model number of the instrument.

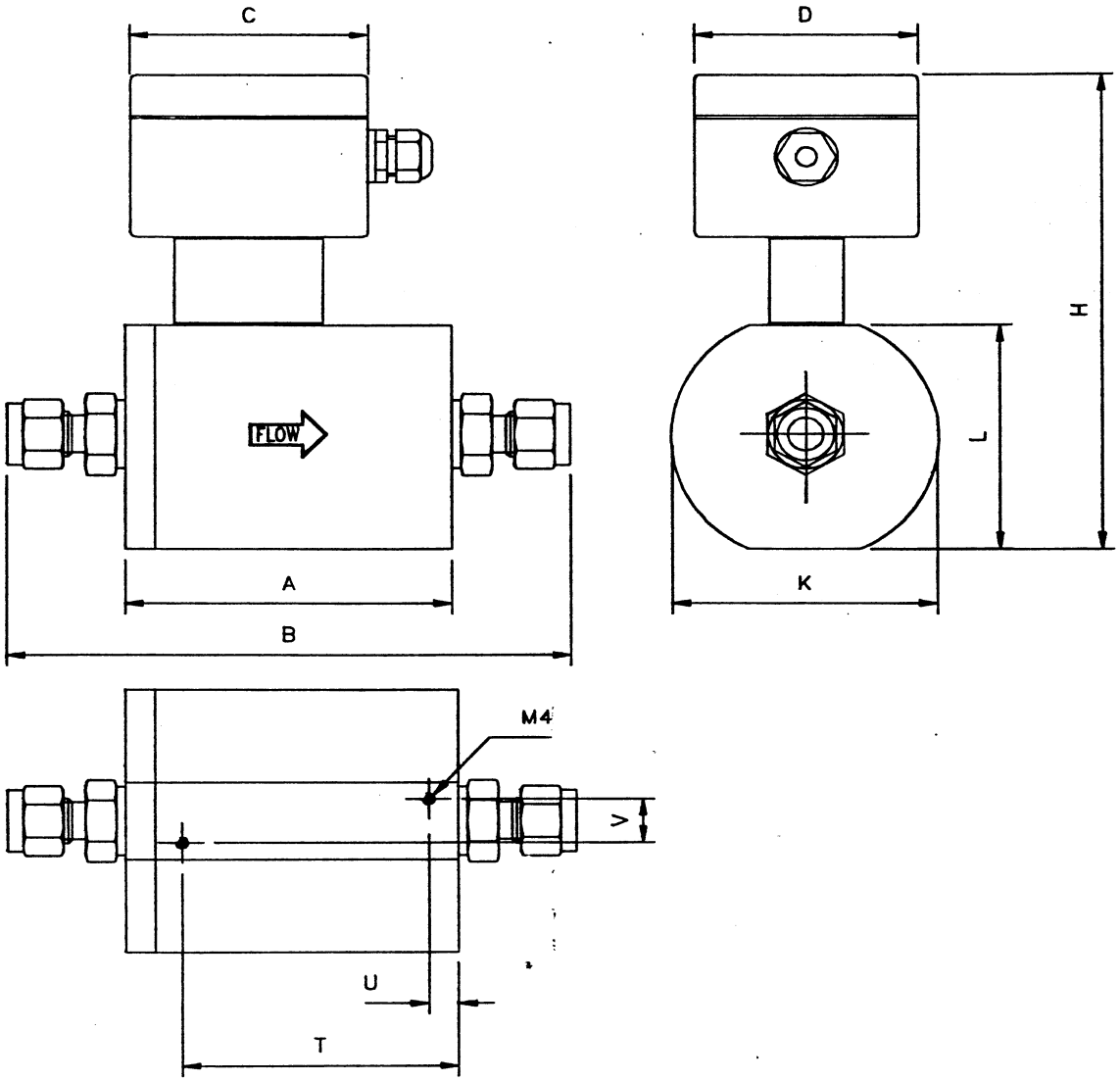

A	B	C	D	H	K	L	T	U	V
110	179	80	75	174	89	82	90	10	22

.116C

F-103I

Recommended spare parts:

P.C.board
Capillary assembly
Laminar flow element
Set of O-Rings
Fittings

Note: For spare parts always indicate serial number and model number of the instrument.

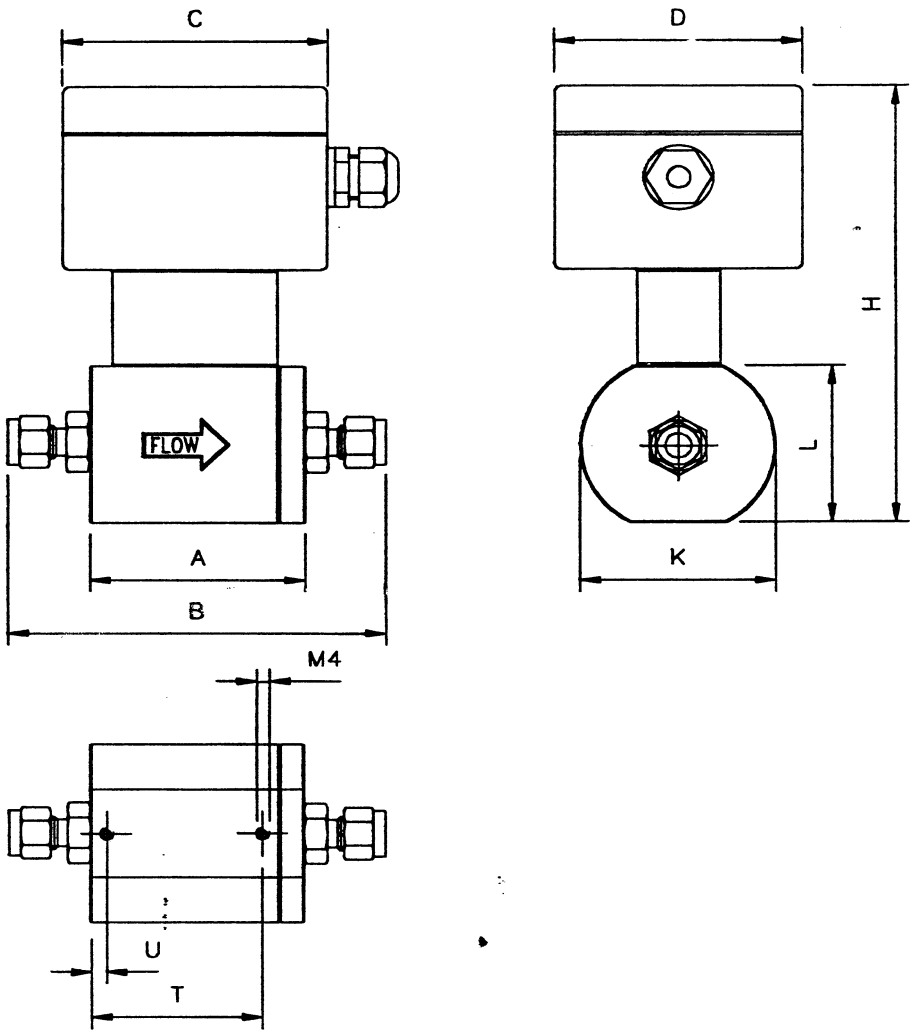

A	B	C	D	H	K	L	T	U
65	115	80	75	145	59	53	52	5

.202B

F-112AI

Recommended spare parts:

P.C.board
Capillary assembly
Laminar flow element
Set of O-Rings
Fittings

Note: For spare parts always indicate serial number and model number of the instrument.

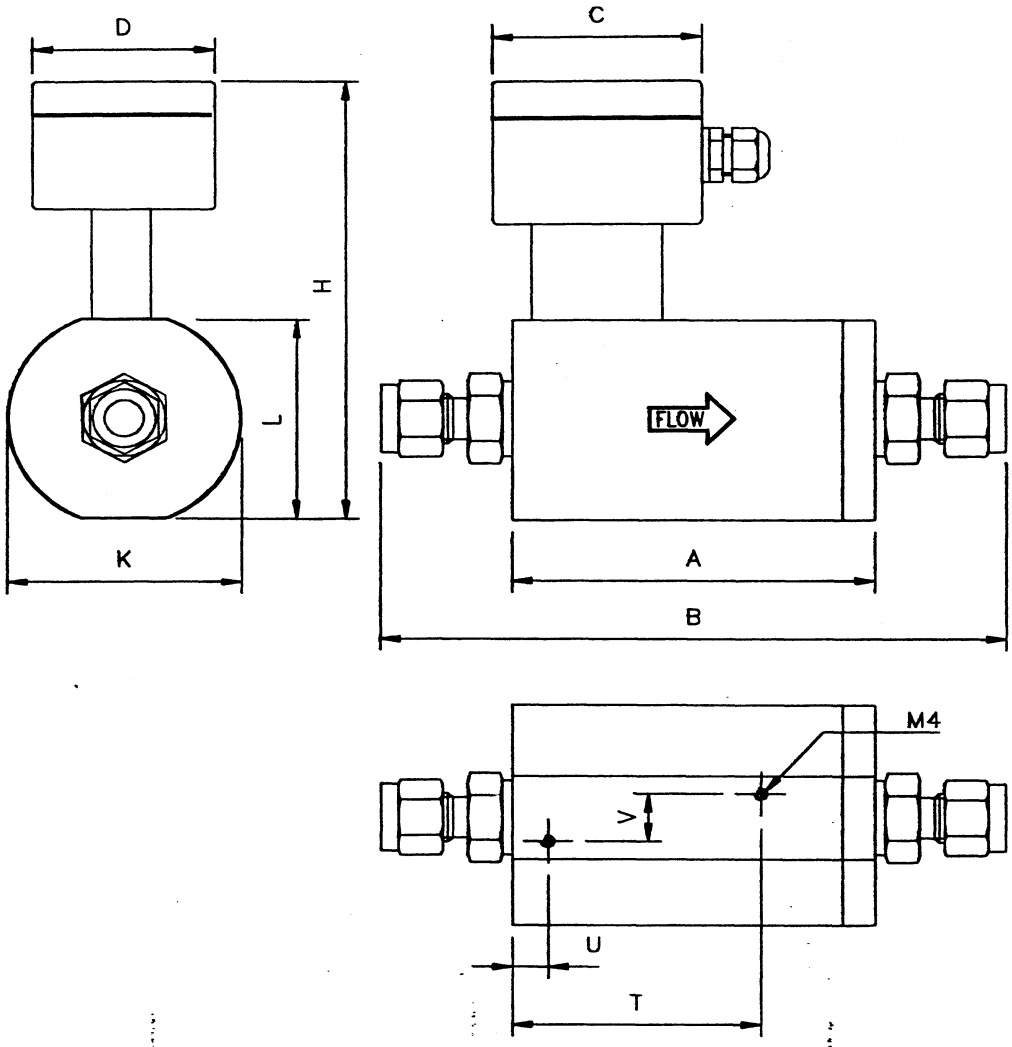

A	B	C	D	H	K	L	T	U	V
112	181	80	75	159	74	67	77	12	22

.249A

F-113AI

Recommended spare parts:

P.C.board
Capillary assembly
Laminar flow element
Set of O-Rings
Fittings

Note: For spare parts always indicate serial number and model number of the instrument.

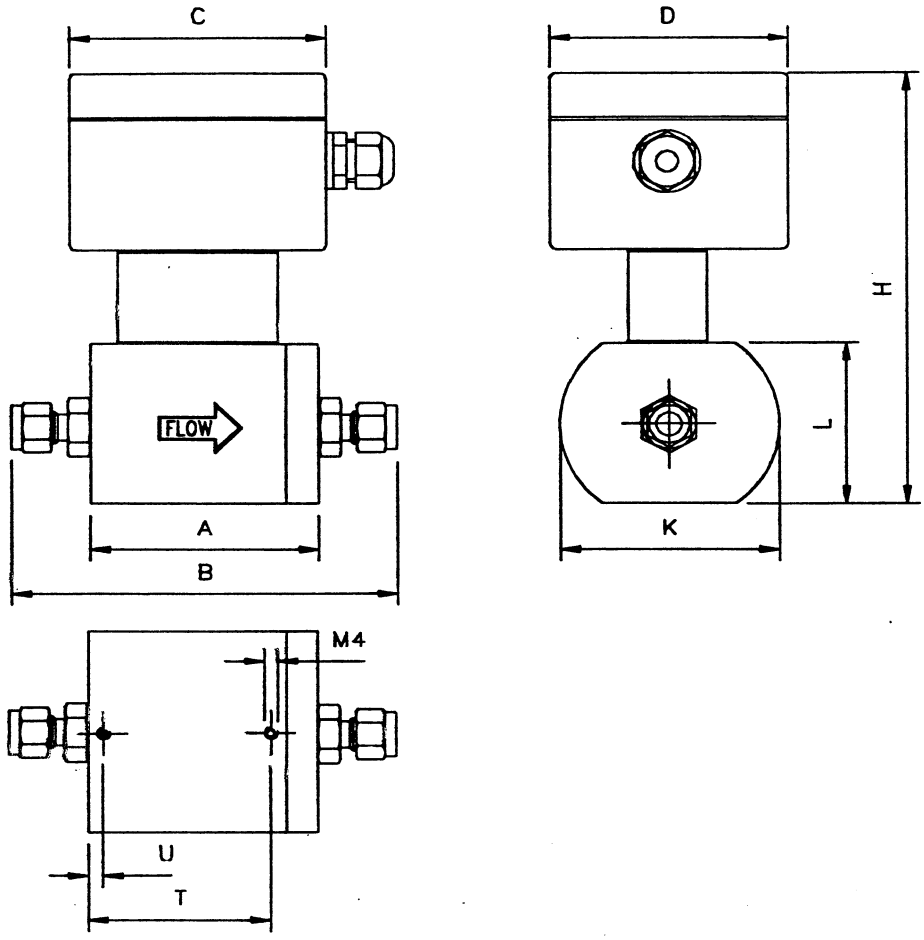

A	B	C	D	H	K	L	T	U
77	127	80	75	147	69	55	58	5

.080C

F-122I/F-132I

Recommended spare parts:

P.C.board
Capillary assembly
Laminar flow element
Set of O-Rings
Fittings

Note: For spare parts always indicate serial number and model number of the instrument.

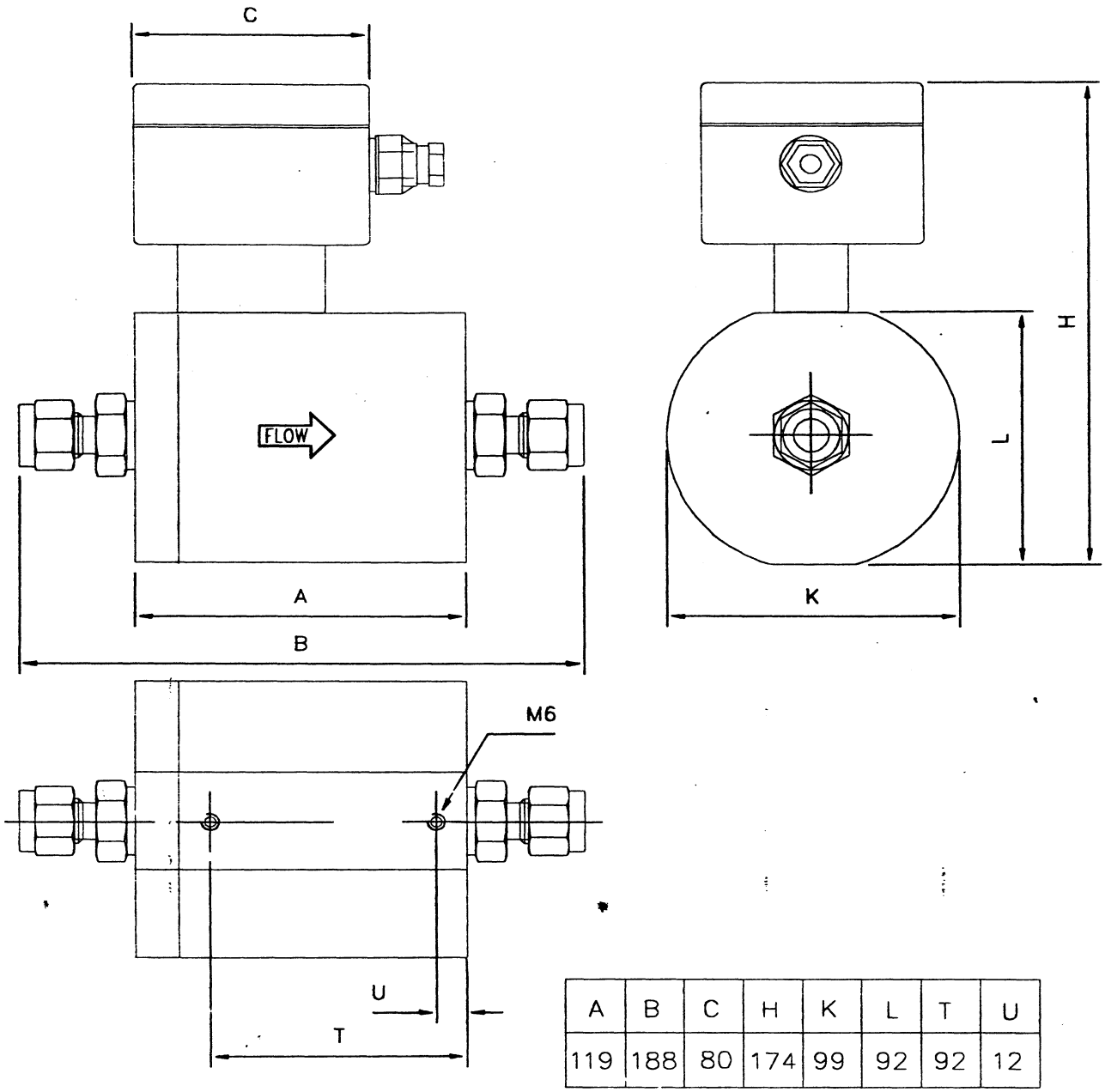

A	B	C	H	K	L	T	U
119	188	80	174	99	92	92	12

.081D

F-123AI/F-133AI

Recommended spare parts:

P.C.board
Capillary assembly
Laminar flow element
Set of O-Rings
Fittings

Note: For spare parts always indicate serial number and model number of the instrument.

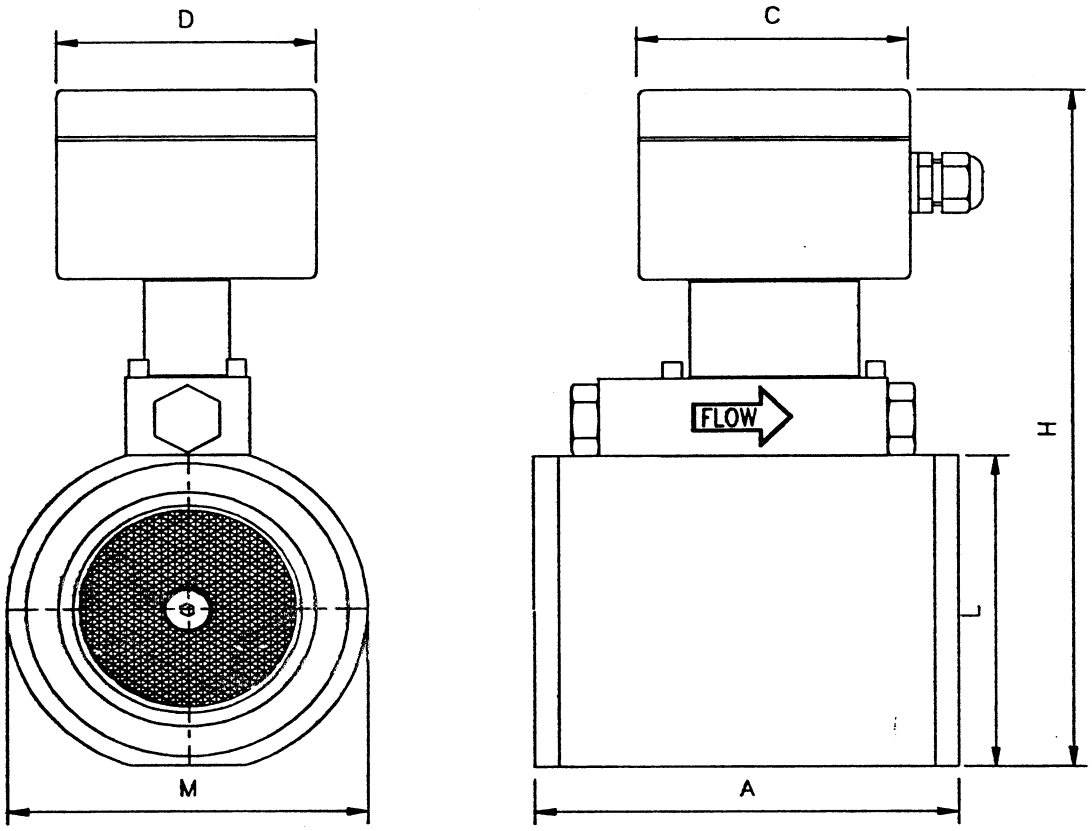

Model	A	C	D	H	L	M
F–106A	125	80	75	186	66	ø74
F–106B	125	80	75	198	78	ø84
F–106C	125	80	75	228	108	ø114
F–106D	125	80	75	258	138	ø144

.131D

F-106A/F-106B/F-106C/F-106D

Recommended spare parts:

P.C.board
Capillary assembly
Laminar flow element main channel
Laminar flow element bypass
Set of O-Rings

Note: For spare parts always indicate serial number and model number of the instrument.

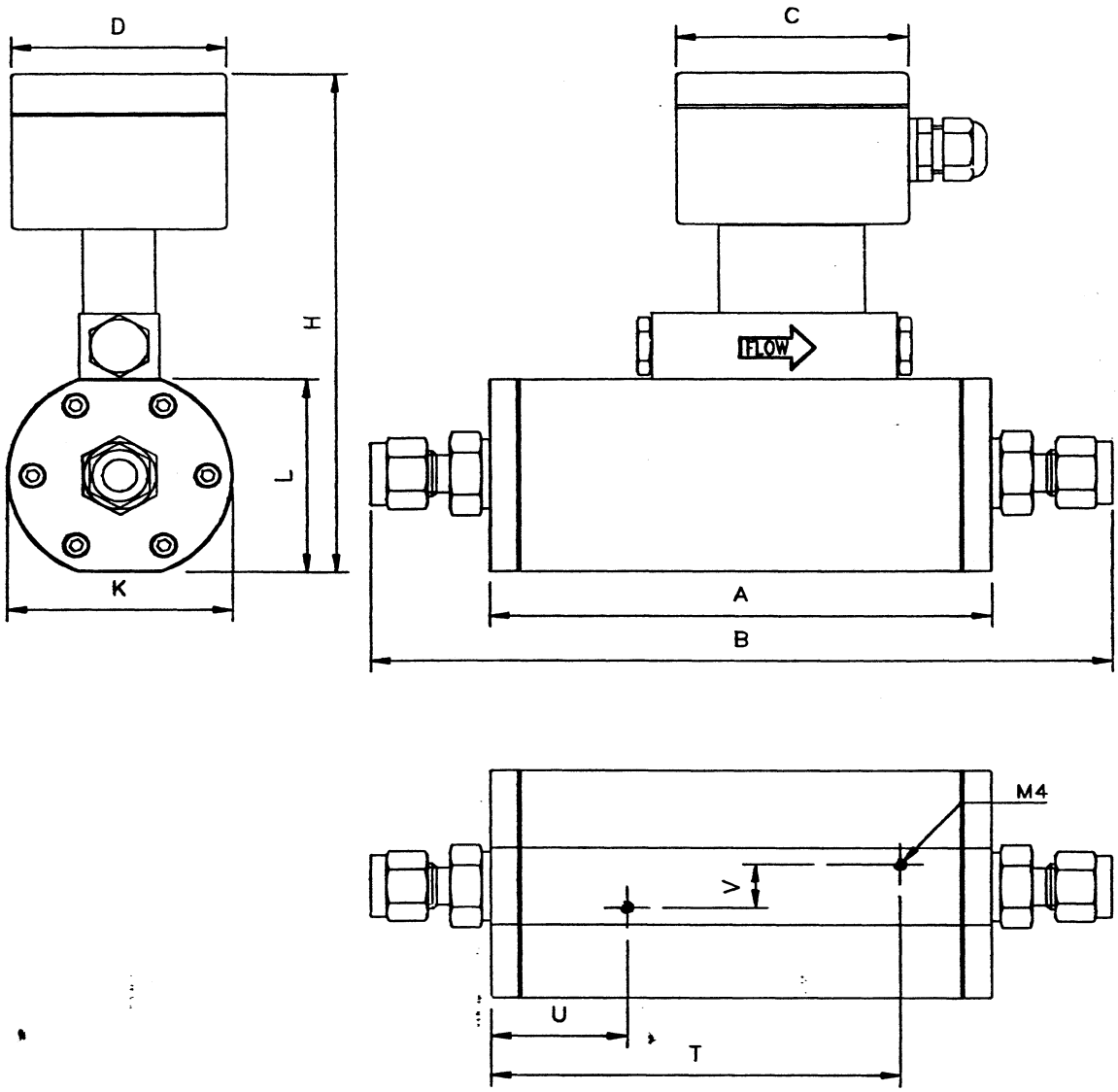

A	B	C	D	H	K	L	T	U	V
174	241	80	75	188	74	67	144	54	22

.248B

F-116A

Recommended spare parts:

P.C.board
Capillary assembly
Laminar flow element main channel
Laminar flow element bypass
Set of O-Rings
Fittings

Note: For spare parts always indicate serial number and model number of the instrument.

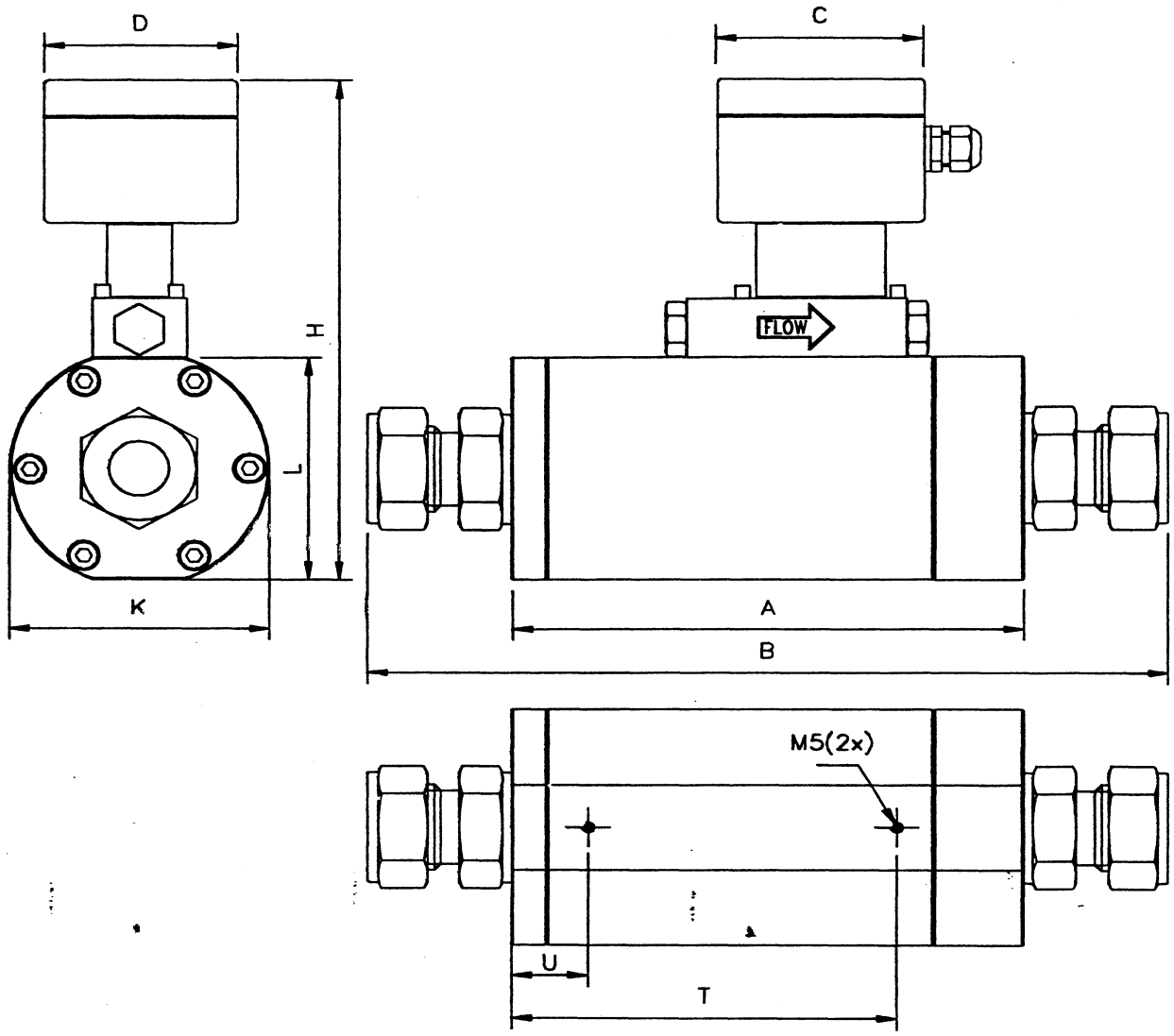

MODEL	A	B	C	D	H	K	L	T	U
F–116B	192	280	80	75	204	89	84	143	27

226B

F-116B

Recommended spare parts:

P.C.board
Capillary assembly
Laminar flow element main channel
Laminar flow element bypass
Set of O-Rings
Fittings

Note: For spare parts always indicate serial number and model number of the instrument.

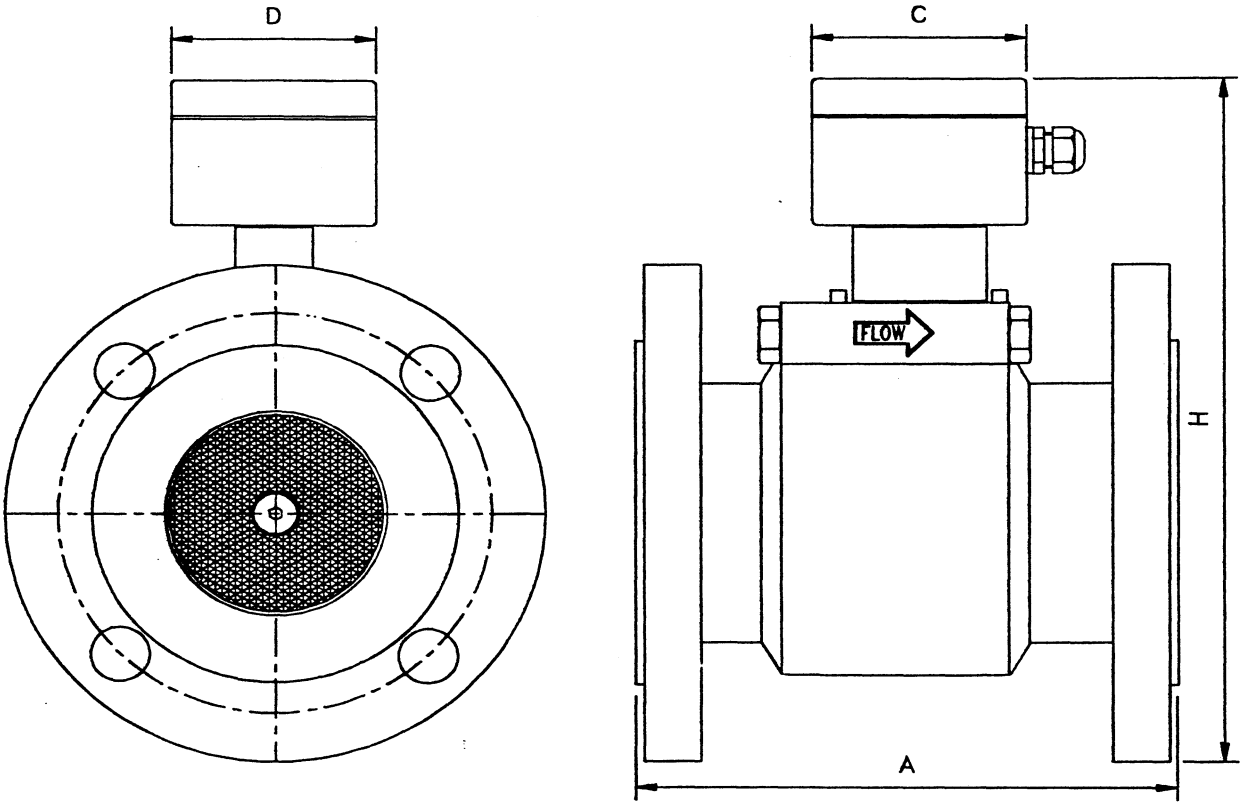

Model	A	C	D.	H Din	H Ansi	Flange Type	
F–107A	200	80	75	229	218	Din 2635 PN40/DN40	150 Lbs Ansi 1.5"
F–107B	200	80	75	243	237	Din 2635 PN40/DN50	150 Lbs Ansi 2"
F–107C	200	80	75	274	270	Din 2635 PN40/DN80	150 Lbs Ansi 3"
F–107D	200	80	75	305	302	Din 2635 PN40/DN100	150 Lbs Ansi 4"

.129D

F-107A/F-107B/F-107C/F-107D with DIN and ANSI flanges

Recommended spare parts:

P.C.board
Capillary assembly
Laminar flow element main channel
Laminar flow element bypass
Set of O-Rings

Note: For spare parts always indicate serial number and model number of the instrument.

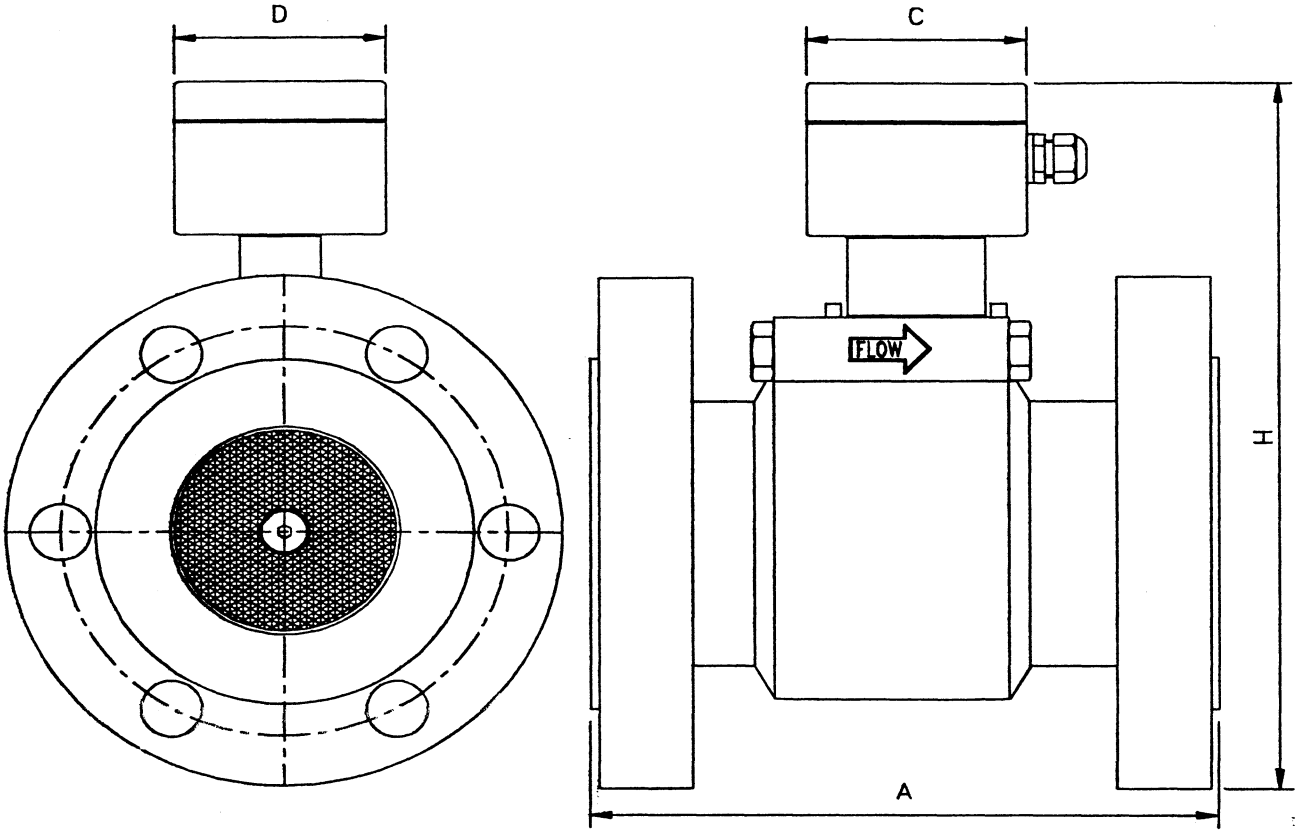

Model	A	C	D	H Din	Flange Type
F–117A	225	80	75	247	Din 2637 PN100/DN40
F–117B	225	80	75	271	Din 2637 PN100/DN50
F–117C	225	80	75	302	Din 2637 PN100/DN80
F–117D	225	80	75	333	Din 2637 PN100/DN100

.152B

F-117A/F-117B/F-117C/F-117D

Recommended spare parts:

P.C.board
Capillary assembly
Laminar flow element main channel
Laminar flow element bypass
Set of O-Rings

Note: For spare parts always indicate serial number and model number of the instrument.

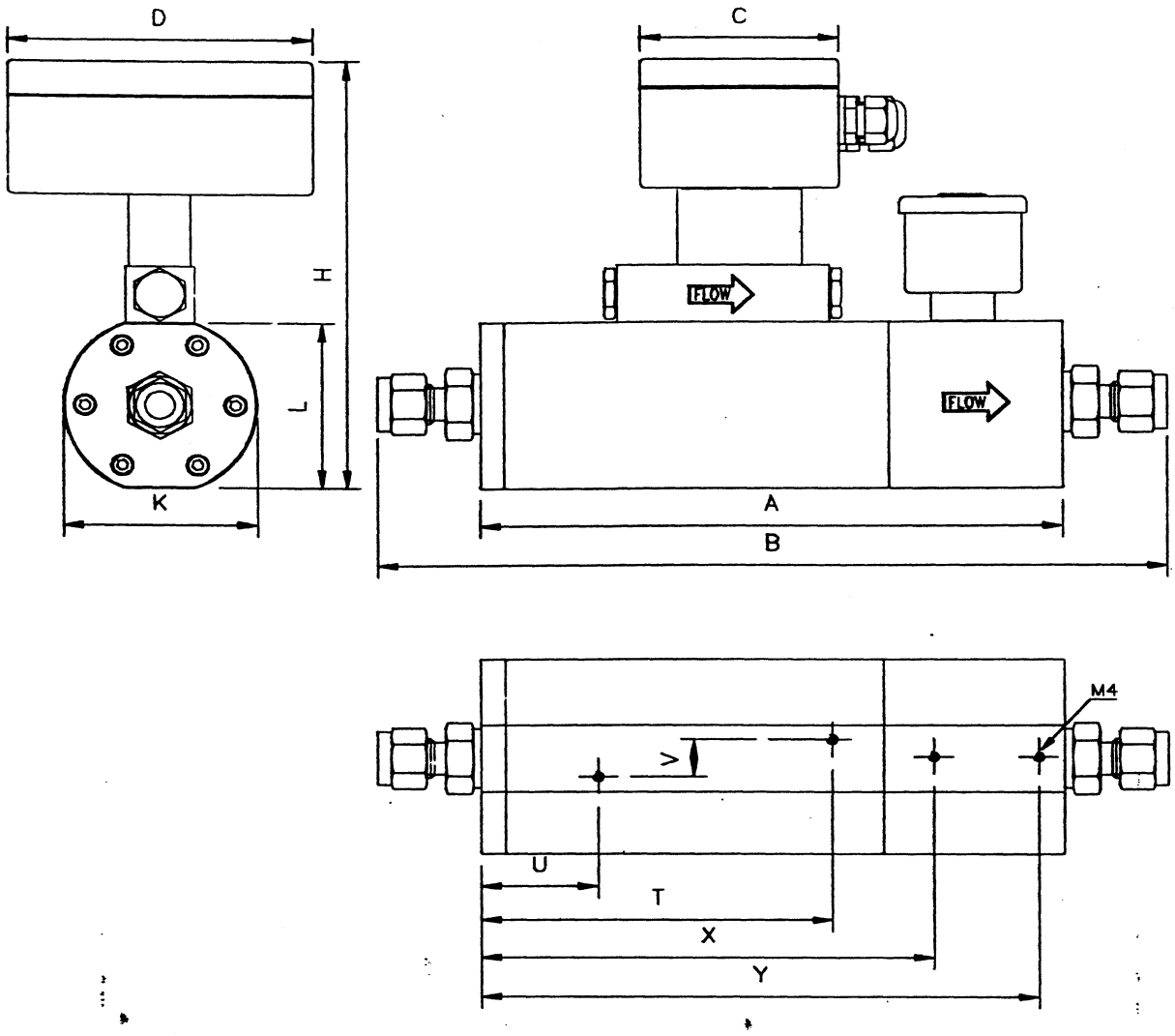

A	B	C	D	H	K	L	T	U	V	X	Y
233	300	80	125	188	74	67	144	54	22	183	223

.246B

F-206AC

Recommended spare parts:

P.C.board
Capillary assembly
Laminar flow element main channel
Laminar flow element bypass
Set of O-Rings
Pilot valve assembly
Pressure valve assembly
Set of O-rings
Fittings
Coil

Note: For spare parts always indicate serial number and model number of the instrument.

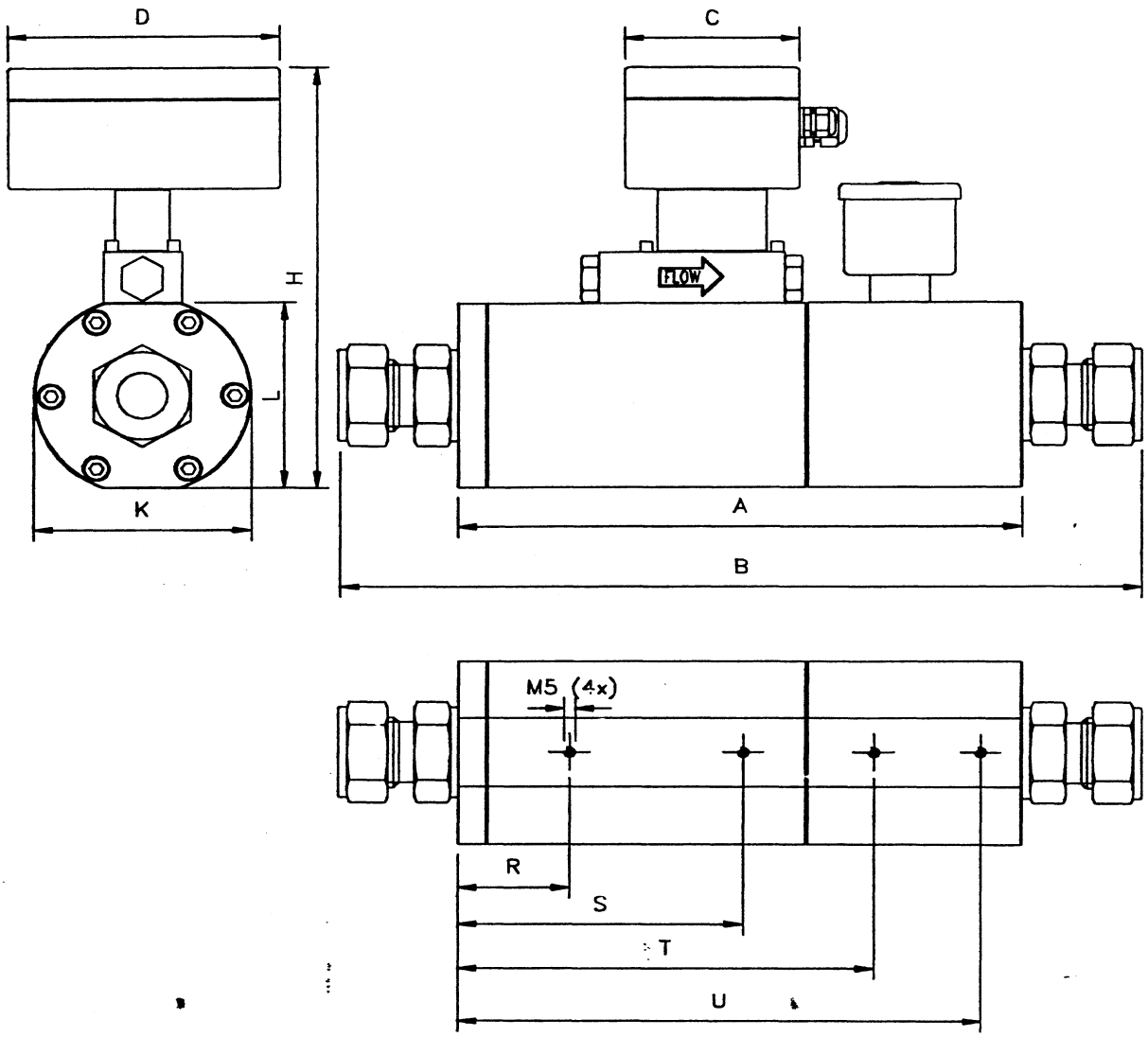

MODEL	A	B	C	D	H	K	L	R	S	T	U
F-206BC/F-216BC	251	340	80	125	204	89	84	27	143	191	238

.232B

F-206BC

Recommended spare parts:

P.C.board
Capillary assembly
Laminar flow element main channel
Laminar flow element bypass
Set of O-Rings

Pilot valve assembly
Pressure valve assembly
Set of O-rings
Fittings
Coil

Note: For spare parts always indicate serial number and model number of the instrument.

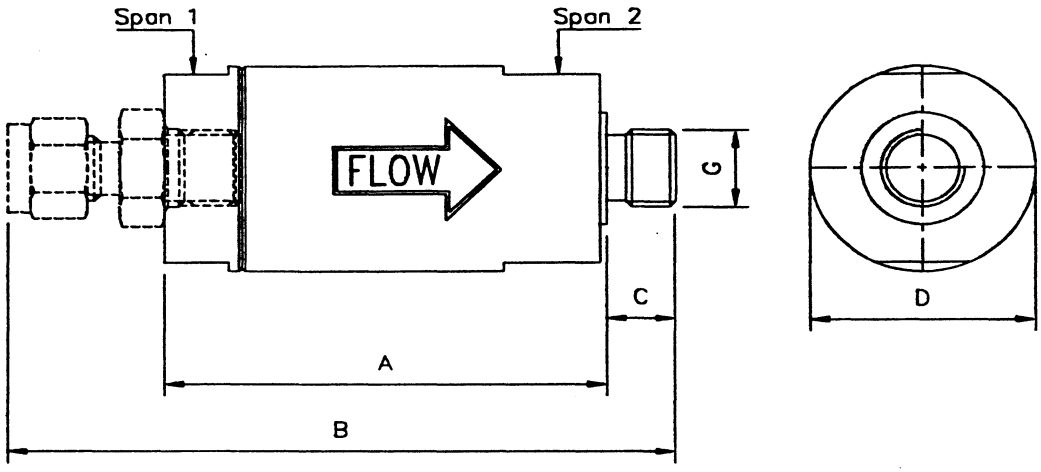

MODEL	A	B	C	D	G	Span 1	Span 2
M410	76	112	10	ø23	1/4"	20	20
M411	53	89	10	ø23	1/4"	20	20
M422	70	106	10	ø35	1/4"	30	32
M423	80	129	14	ø35	1/2"	30	32

.164C

M-410/M-411/M-422/F-423

Recommended spare parts:

Filter
Spring
Set of O-rings
Fittings

Note: For spare parts always indicate serial number and model number of the instrument.

F-112AI + F-001AI Ind.

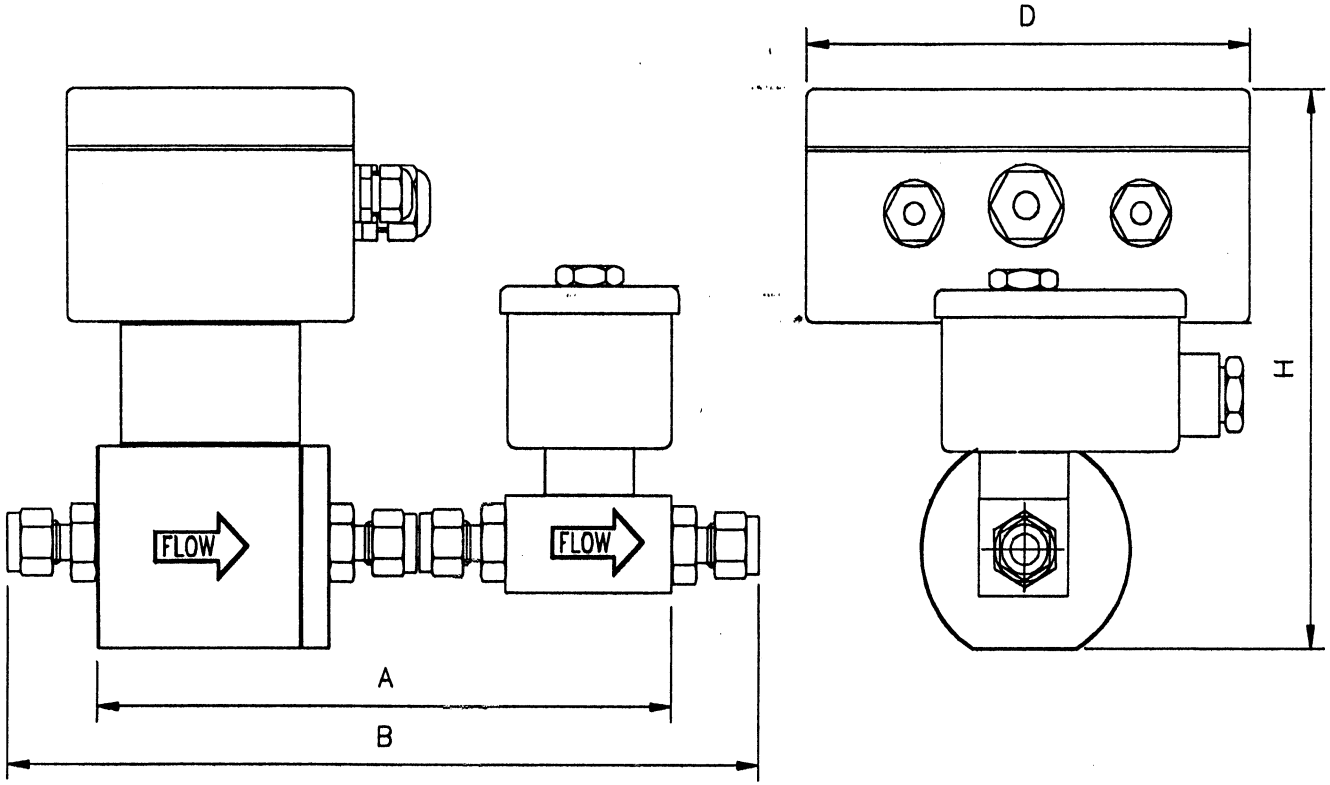

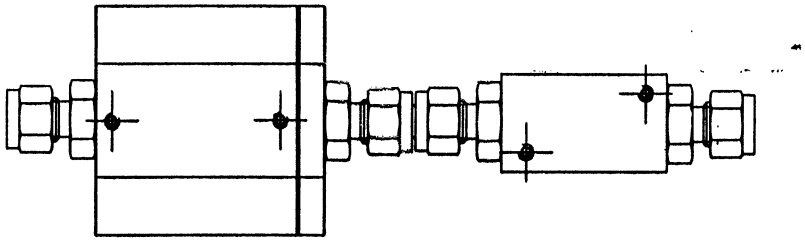

A	B	D	H
165	213	125	145

.292A

F-112AI + F-002AC Ind.

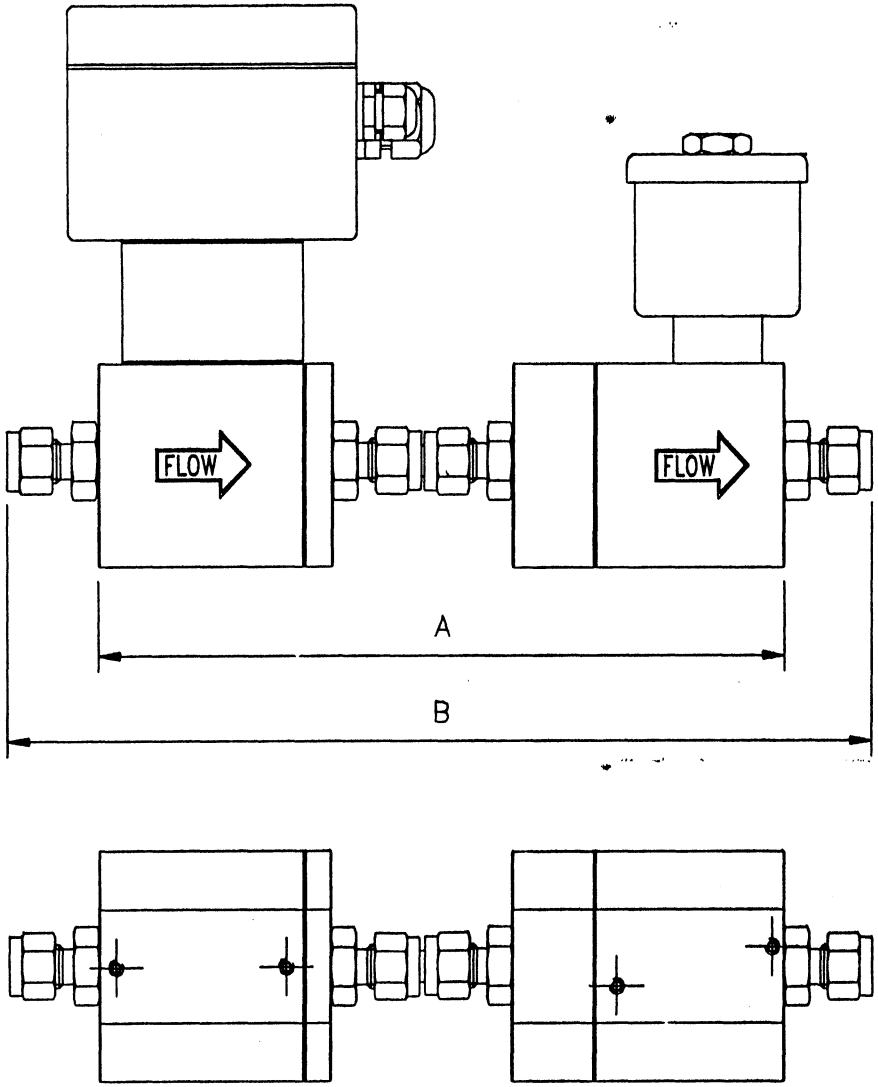

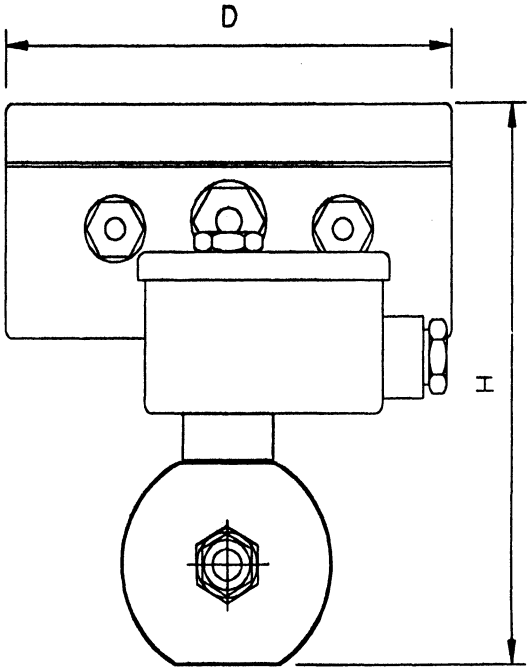

A	B	D	H
193	243	125	145

.293A

F-132I + F-033C Ind.

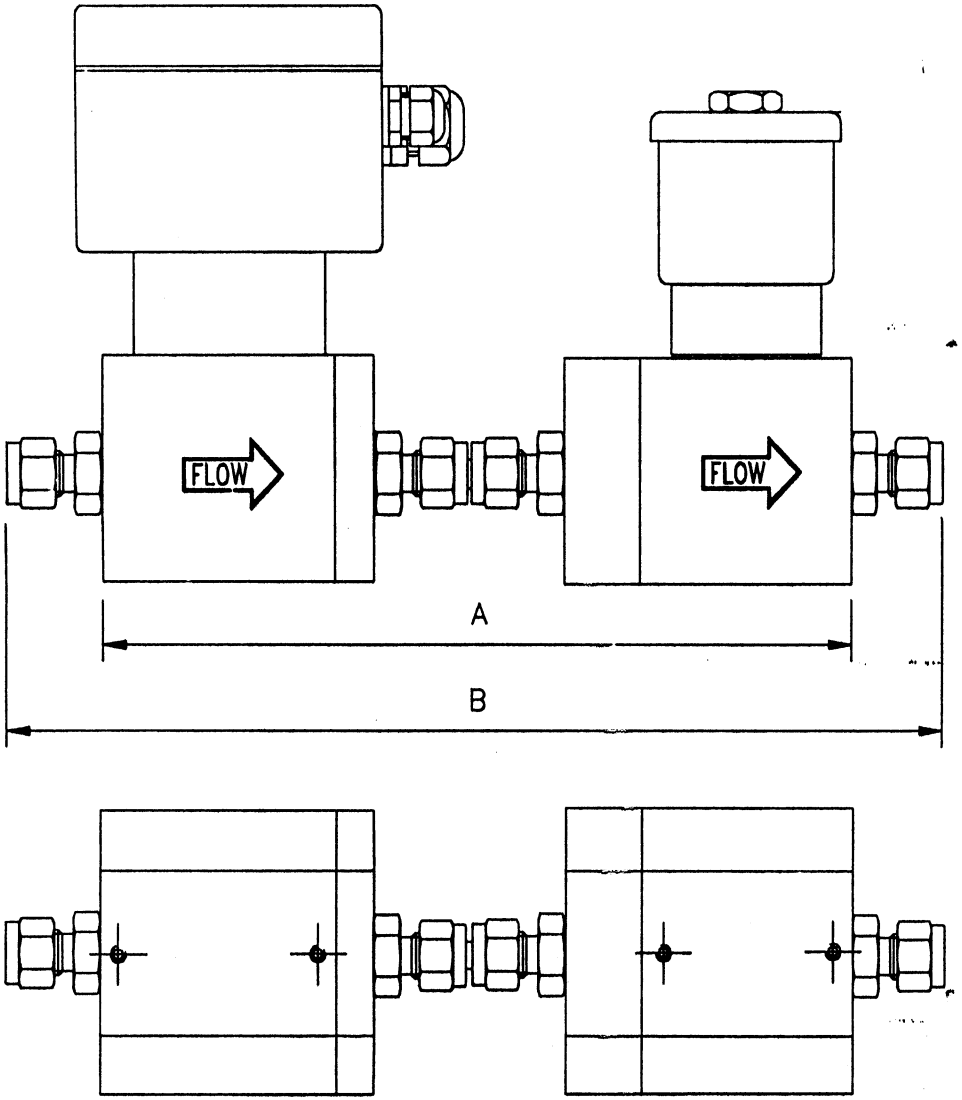

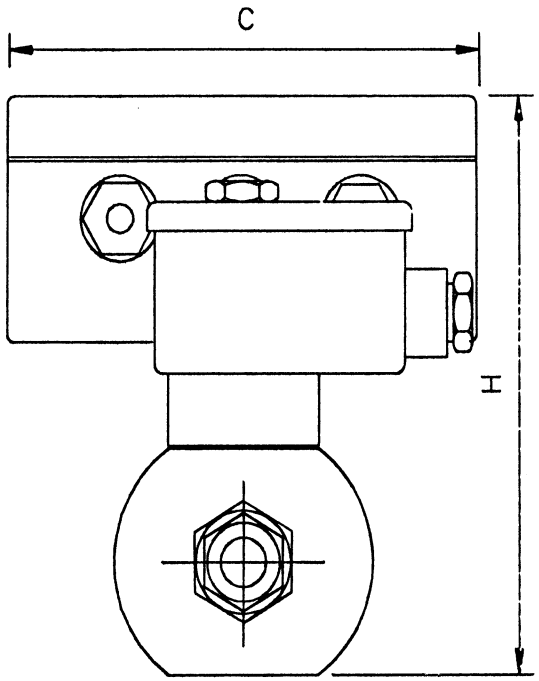

A	B	D	H
205	254	125	137

.124A

APPENDIX 3

HOOK-UP DIAGRAMS

APPENDIX 4

CALIBRATION CERTIFICATE

MFC Industrial with option frequency output

Output Signals: (available at screw terminal inside housing)

Pin 10: +15Vdc max. 10mA available

Pin 11: 0Vdc

Pin 12: Ground

Pin 13: Scaled frequency output at TTL level max. 1 TTL load. 20/80% Duty Cycle.
100% flowrate frequency output adjustable within four ranges:

* 0.1 to 1 Hz
* 1 to 10 Hz
* 10 to 100 Hz
* 1 to 10 kHz (duty cycle approx. between 20/80 and 80/20 /pin 14 not usable

Low frequency cut-off at approx. 2%.

Pin 14: Scaled open collector Frequency Output. Range 0.1 - 100Hz.
When using a resistor from 4k7 to +5Vdc certain maximum capacitive loads should not be exceeded (see graph).
Uce max. 24V. Ic max. 5mA.
Low frequency cut-off at approx. 2%.

External connections

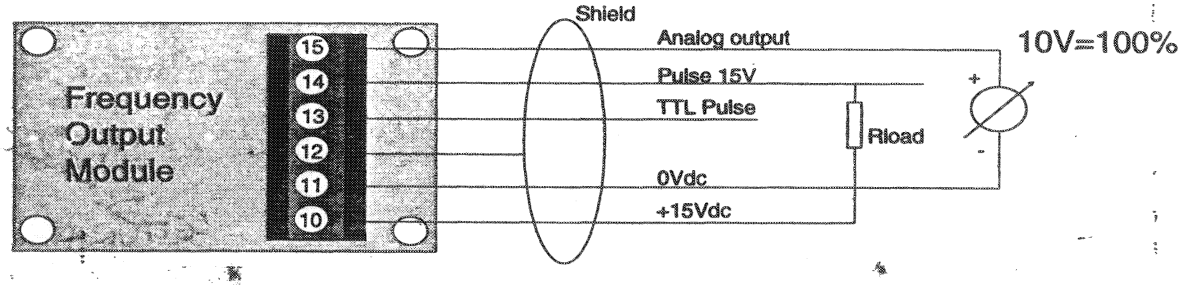

Maximum capacitive output load

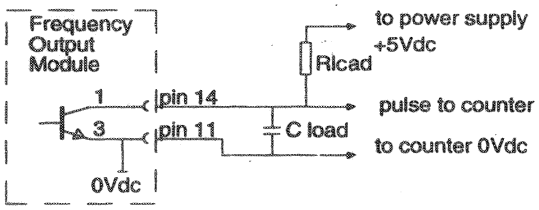

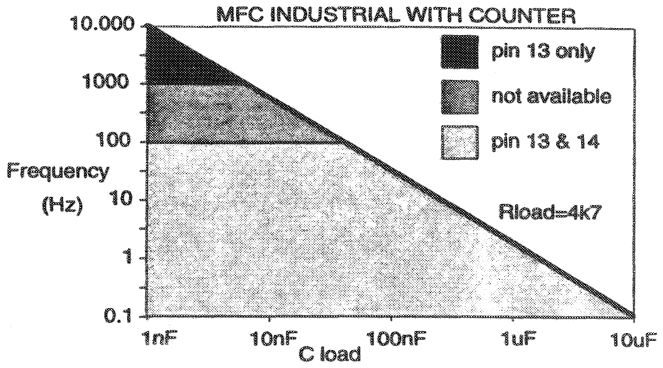

MFM/MFC INDUSTRIAL

External Connections

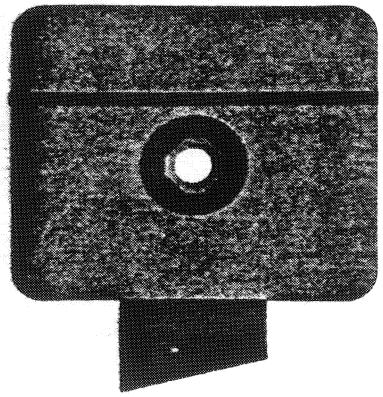

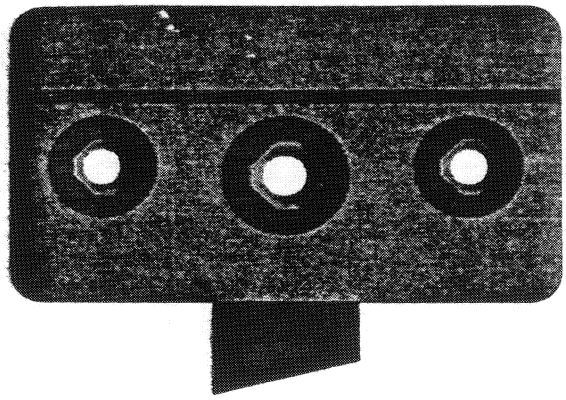

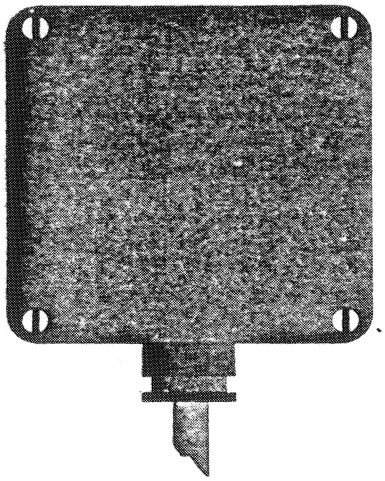

3-wire cable
with shield

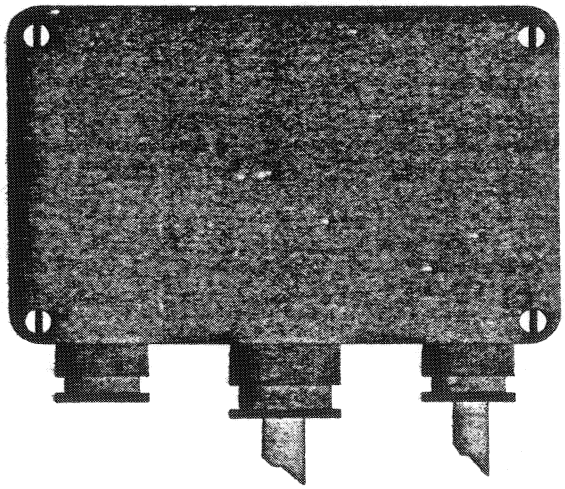

6-wire cable
with shield

2-wire cable
with shield

Optional Counter

System

Valve

DISTRIBUTORS		TELEPHONE	FAX
Australia	ANRI Instruments and Control PTY Ltd. Unit 29, 756-758 Burwood Hwy, Ferntree Gully, Victoria 3156	03-7523782	03-7523783
Austria	HL Mess- und Regeltechnik Halleiner Landestrasse 608, A 5411 Oberalm	06245-78555	06245-78556
Belgium	FLOWCOR van Cortbeemdelei 25, B-2100 Deurne	03-3260805	03-3260797
Denmark	Insatech Algade 133, 4760 Vordingborg	53772095	53777018
Finland	Kytölä Oy Teollisuusalue, 40950 Muurame	941-631499	941-631419
France	Instrutec S.A. 53, Rue Jacques Vernoil, 95370 Montigny Les Cormeilles	1-34508700	1-34508991
Germany (north)	Mättig Mess- und Regeltechnik Vertriebs-GmbH Holbeinstrasse 1a, 59423 Unna	02303-25057-0	02303-12644
Germany (south)	Dipl. Ing. Wagner Mess- und Regeltechnik GmbH Pirazzistr. 18, 63067 Offenbach	069-829776-0	069-829776-10
Italy	ASA S.p.A. Via T. Tasso 29, 20099 Sesto San Giovanni	02-26221432	02-2482558
Netherlands	Bronkhorst HI-TEC Nederland B.V. Kerkewijk 65, 3901 EC Veenendaal	0318-551280	0318-550226
Norway	Flow-Teknikk as Arbosgt. 1a, 0368 Oslo	22466011	22690144
Spain	IBERFLUID Instruments Cardenal Reig, 12, 08028 Barcelona	93-3333600	93-3340524
Sweden	S.E.G. Process AB Snörmakarvägen 29, S-161 47 Bromma	8-256065	8-255115
Switzerland	Vögtlin Instruments AG Langenhagstrasse 1, CH-4147 Aesch BL	061-7566300	061-7566301
United Kingdom/ Ireland	Krohne Measurement and Control Ltd. Rutherford Drive, Park Farm Industrial Estate Wellingborough, Northants, NN8 6AE	01933-408500	01933-408501
India	Eureka Industrial Equipment PVT. Ltd. 17-20/First Floor, Royal Chambers, Paul Road, Pune 411 038	212-341323	212-338282

The instruments described in this manual are also manufactured in

U.S.A.	Porter Instrument Co., Inc. 245 Township Line Road, Hatfield, PA 19440-0907	215-723-4000	215-723-2199
Japan	Oval Corporation 10-8, Kamiochiai 3-chome Sjinjuku-ku, Tokyo, 161	03-33605090	03-33658603

BRONKHORST HI-TEC

Nijverheidsstraat 1a - 7261 AK Ruurlo The Netherlands
Telephone: (0573) 45 88 00 - Fax: (0573) 45 88 08

March 1996

Doc. no.: 9.02.275 B
Date: 15 - 07 - 1993

Safety Information for the Return of Contaminated Instruments and Components.

General Information

The employer (user) bears the responsability for the health and safety of his employees. This stretches back to the people that come into touch with the instruments and components during repair and/or service of the instruments and components at the user's site or in the manufacturer's plant. The contamination of the instrument and components must be made known, and the declaration on contamination must be filled out.

Declaration on Contamination

The people that carry out the repair and/or service must be informed about the condition of the contaminated instruments and components before the work is started. The "Declaration on Contamination of Instruments and Components" serves that purpose.

This declaration must be sent direct to the supplier or a firm assigned by him. A second copy must be sent together with the forwarding documents of the consignment.

Despatch

When despatching contaminated instruments and components the instructions prior to shipment as given in the manual must be obeyed, such as:

- depressurize instrument,
- neutralize instrument by purging with gas and/or rinse with adequate solvent,
- remove filter cartridges from separate filters or integerated filters on inlet of instruments.
- seal all openings air tight,
- pack in suitable protective foil (sealed),
- transport in suitable transport containers.

Declaration on Contamination of Instruments and Components

When returning material, always describe the problem and if possible the work to be done, else a delay in repair will occur.
In case of contamination the material will only be accepted for repair if adequate cleaning has been carried out and this declaration has been filled out correctly and completely, and signed by authorized persons.

A. Type of instrument
- Model no./Article no.: .....
- Serial no.: .....
- Despatch date: .....

B. Reason of return:

.....

.....

C. The instrument was contaminated with .....
and was cleaned with .....

To safe-guard staff in the repair department take proper care of packing, if possible use the original packing box and seal the instrument adequately.

D. Is the contamination

- ❑ a. flammable
- ❑ b. toxic (toxic byproducts)
- ❑ c. poisonous
- ❑ d. corrosive
- ❑ e. inert
- ❑ f. irritant
- ❑ g. moisture sensitive
- ❑ h. oxidizer
- ❑ i. radioactive
- ❑ j. micro biological
- ❑ k. cancer suspect
- ❑ l. other, describe: .....

E. Legally valid declaration

Herewith we (I) assure, that the statements in this form are correct and complete. The despatch of the contaminated instruments and components will take place in accordance with sound and legal regulations.

Firm/Institute : .....
Street: ..... **Postal Code/Town:** .....
Telephone: .....
Fax: ..... **Telex:** .....

Name (in blockletters) .....
Position: .....

Date: ..... **Stamp office:** .....

Legally valid signature: .....

Weka AG
Schürlistrasse 8
CH-8344 Bäretswil, Switzerland
Telefon 01/939 29 59
Fax 01/939 29 63, Telex 875 744

ANSALDO ENERGIA S.P.A.
Mr. Valente
Via N. Lorenzi 8
I-16152 Genova

I/Zeichen
Your ref.

U/Zeichen
Our ref. Ki/BR

CH-8344 Bäretswil, 30.07.97

Dispatching Documents

Your order no(s) : BC 190548 UMA GMO 00/01
Our order no(s) : C-132 769 - 775

Dear Mr. Valente

Refering to the above mentioned order(s) enclosed you will find the following documents:

- ~~1 invoice no. 85136 (2-fold)~~
- 7 Certificates of used materials
- 7 Specific test reports 2.3 EN 10204
- 7 Pressure tests
- 7 Helium - tightness tests
- 5 Adjustment of control valve

With best regards
Weka AG

B. Reiniger

Encl.

WEKA AG, Schürlistr. 8, CH-8344 Bäretswil, Telefon 01/939 29 59, Fax 01/939 29 63

Protokoll / Record

BESCHEINIGUNG ÜBER VERWENDETE WERKSTOFFE
CERTIFICATE OF USED MATERIALS

Kunde / Customer	Ansaldo Energia s. p. a., I-16125 Genova	Auftrags-No. / Fabrication-No.	C-132769
Kundenbestell-Nr. / Customer's order No.	BC 190548	Unterauftrag-Nr. / Position-No.	001
		Schritt-Nr. / Seqence-No.	--
Bezeichnung / Object	P-WEV DN10/PN25 C-Po	Anzahl / Quantity	1
Zeichnungs-Nr. / Drawing-No.	970304		
Ventil-Nr. / Valve-No.	CV 1		

Teile mit Abnahmeprüfzegnis 3.1.B nach EN 10204
Parts With Inspection certificate 3.1.B nach EN 10204

Zeichn.-Nr. Drawing-No	Pos.	Benennung Part	Stk. Pc. Obj.	Werkstoff Material	Chargen-Nr. Heat-No.	Zeugnis-Nr. Cert.-No.	Typ Typ	Hersteller Manufactur
35169	1	Body ø 45 Gehäuse	1	304L	19065	656	3.1B	R. Müller AG
34599	2	Nozzle ø 17,2/14 Stutzen	1	1.4435	160847	3711	3.1B	AST
34600	3	Seat part ø 28 Sitzstutzen	1	1.4435	420038	3386	3.1B	Ugine-Savoie
81465	4	Bellows Balg	1	316L	233266	3667	3.1B	Senior

Alle übrigen Teile mit Werkszeugnis 2.2 nach EN 10204
All further parts with test report 2.2 to EN 10204

Werkszeugnis 2.2 nach EN 10204: Wir bestätigen, aufgrund der laufenden Betriebs-Aufzeichnungen dass sämtliche Teile aus den vorgeschriebenen Werkstoffen hergestell wurden.

Test report 2.2 to EN 10204: On the basis of continous fabrication records, we certify, that all parts have been manufactured in the prescribed materials.

Bemerkungen:
Remarks:

Datum / Date: 25.07.97/BR

Hersteller / Manufacturer

WEKA AG
Schürlistrasse 8
CH-8344 Bäretswil

WEKA AG, Schürlistr. 8, CH-8344 Bäretswil, Telefon 01/939 29 59, Fax 01/939 29 63

Protokoll / Record

BESCHEINIGUNG ÜBER VERWENDETE WERKSTOFFE
CERTIFICATE OF USED MATERIALS

Kunde / Customer	Ansaldo Energia s. p. a., I-16125 Genova	Auftrags-No. / Fabrication-No.	C-132770
Kundenbestell-Nr. / Customer's order No.	BC 190548	Unterauftrag-Nr. / Position-No.	001
		Schritt-Nr. / Seqence-No.	--
Bezeichnung / Object	P-TEV DN10/PN25 C-Ps	Anzahl / Quantity	1
Zeichnungs-Nr. / Drawing-No.	970314		
Ventil-Nr. / Valve-No.	CV 2		

Teile mit Abnahmeprüfzegnis 3.1.B nach EN 10204
Parts With Inspection certificate 3.1.B nach EN 10204

Zeichn.-Nr. Drawing-No	Pos.	Benennung Part	Stk. Pc. Obj.	Werkstoff Material	Chargen-Nr. Heat-No.	Zeugnis-Nr. Cert.-No.	Typ Typ	Hersteller Manufactur
34601	1	Body ø 32 Gehäuse	1	1.4435	515030	3587	3.1B	Ugine-Savoie
34599	2	Nozzle ø 17,2/14 Stutzen	1	1.4435	160847	3711	3.1B	AST
34600	3	Seat part ø 28 Sitzstutzen	1	1.4435	420038	3386	3.1B	Ugine-Savoie
35059	4	Threaded fitting ø 90 Gewindeteil	1	1.4435	651026	3887	3.1B	Ugine-Savoie
35060	5	Pipe ø 18/16 Pipe	1	316L	468582	3237	3.1B	Fine Tubes
81465	6	Bellows Balg	1	316L	233266	3667	3.1B	Senior

Alle übrigen Teile mit Werkszeugnis 2.2 nach EN 10204
All further parts with test report 2.2 to EN 10204

Werkszeugnis 2.2 nach EN 10204: Wir bestätigen, aufgrund der laufenden Betriebs-Aufzeichnungen dass sämtliche Teile aus den vorgeschriebenen Werkstoffen hergestell wurden.

Test report 2.2 to EN 10204: On the basis of continous fabrication records, we certify, that all parts have been manufactured in the prescribed materials.

Bemerkungen:
Remarks:

Datum / Date: 25.07.97/BR

Hersteller / Manufacturer

WEKA AG
Schürlistrasse 8
CH-8344 Bäretswil

WEKA AG, Schürlistr. 8, CH-8344 Bäretswil, Telefon 01/939 29 59, Fax 01/939 29 63

Protokoll / Record

BESCHEINIGUNG ÜBER VERWENDETE WEKSTOFFE
CERTIFICATE OF USED MATERIALS

Kunde / Customer	Ansaldo Energia s. p. a., I-16125 Genova	Auftrags-No. / Fabrication-No.	C-132771
Kundenbestell-Nr. / Customer's order No.	BC 190548	Unterauftrag-Nr. / Position-No.	001
		Schritt-Nr. / Seqence-No.	--
Bezeichnung / Object	P-TEV DN10/PN25 C-Po	Anzahl / Quantity	1
Zeichnungs-Nr. / Drawing-No.	970321		
Ventil-Nr. / Valve-No.	CV 3		

Teile mit Abnahmeprüfzegnis 3.1.B nach EN 10204
Parts With Inspection certificate 3.1.B nach EN 10204

Zeichn.-Nr. Drawing-No	Pos.	Benennung Part	Stk. Pc. Obj.	Werkstoff Material	Chargen-Nr. Heat-No.	Zeugnis-Nr. Cert.-No.	Typ Typ	Hersteller Manufactur
34601	1	Body ø 32 Gehäuse	1	1.4435	515030	3587	3.1B	Ugine-Savoie
34599	2	Nozzle ø 17,2/14 Stutzen	1	1.4435	160847	3711	3.1B	AST
34600	3	Seat part ø 28 Sitzstutzen	1	1.4435	420038	3386	3.1B	Ugine-Savoie
35059	4	Threaded fitting ø 90 Gewindeteil	1	1.4435	651026	3887	3.1B	Ugine-Savoie
35060	5	Pipe ø 18/16 Pipe	1	316L	468582	3237	3.1B	Fine Tubes
81465	6	Bellows Balg	1	316L	233266	3667	3.1B	Senior

Alle übrigen Teile mit Werkszeugnis 2.2 nach EN 10204
All further parts with test report 2.2 to EN 10204

Werkszeugnis 2.2 nach EN 10204: Wir bestätigen, aufgrund der laufenden Betriebs-Aufzeichnungen dass sämtliche Teile aus den vorgeschriebenen Werkstoffen hergestell wurden.

Test report 2.2 to EN 10204: On the basis of continous fabrication records, we certify, that all parts have been manufactured in the prescribed materials.

Bemerkungen:
Remarks:

Datum / Date: 25.07.97/BR

Hersteller / Manufacturer

WEKA AG
Schürlistrasse 8
CH-8344 Bäretswil

WEKA AG, Schürlistr. 8, CH-8344 Bäretswil, Telefon 01/939 29 59, Fax 01/939 29 63

Protokoll / Record

BESCHEINIGUNG ÜBER VERWENDETE WEKSTOFFE
CERTIFICATE OF USED MATERIALS

Kunde / Customer	Ansaldo Energia s. p. a., I-16125 Genova	Auftrags-No. / Fabrication-No.	C-132772
Kundenbestell-Nr. / Customer's order No.	BC 190548	Unterauftrag-Nr. / Position-No.	001
		Schritt-Nr. / Seqence-No.	--
Bezeichnung / Object	P-TEV DN10/PN25 C-Ps	Anzahl / Quantity	1
Zeichnungs-Nr. / Drawing-No.	970314		
Ventil-Nr. / Valve-No.	CV 4		

Teile mit Abnahmeprüfzegnis 3.1.B nach EN 10204
Parts With Inspection certificate 3.1.B nach EN 10204

Zeichn.-Nr. Drawing-No	Pos.	Benennung Part	Stk. Pc. Obj.	Werkstoff Material	Chargen-Nr. Heat-No.	Zeugnis-Nr. Cert.-No.	Typ Typ	Hersteller Manufactur
34601	1	Body ø 32 Gehäuse	1	1.4435	515030	3587	3.1B	Ugine-Savoie
34599	2	Nozzle ø 17,2/14 Stutzen	1	1.4435	160847	3711	3.1B	AST
34600	3	Seat part ø 28 Sitzstutzen	1	1.4435	420038	3386	3.1B	Ugine-Savoie
35059	4	Threaded fitting ø 90 Gewindeteil	1	1.4435	651026	3887	3.1B	Ugine-Savoie
35060	5	Pipe ø 18/16 Pipe	1	1.4435	468582	3237	3.1B	Fine Tubes
81465	6	Bellows Balg	1	316L	DK47	3813	3.1B	Senior

Alle übrigen Teile mit Werkszeugnis 2.2 nach EN 10204
All further parts with test report 2.2 to EN 10204

Werkszeugnis 2.2 nach EN 10204: Wir bestätigen, aufgrund der laufenden Betriebs-Aufzeichnungen dass sämtliche Teile aus den vorgeschriebenen Werkstoffen hergestell wurden.

Test report 2.2 to EN 10204: On the basis of continous fabrication records, we certify, that all parts have been manufactured in the prescribed materials.

Bemerkungen:
Remarks:

Datum / Date: 25.07.97/BR

Hersteller / Manufacturer

WEKA AG
Schürlistrasse 8
CH-8344 Bäretswil

WEKA AG, Schürlistr. 8, CH-8344 Bäretswil, Telefon 01/939 29 59, Fax 01/939 29 63

Protokoll / Record

BESCHEINIGUNG ÜBER VERWENDETE WEKSTOFFE
CERTIFICATE OF USED MATERIALS

Kunde / Customer	Ansaldo Energia s. p. a., I-16125 Genova	Auftrags-No. / Fabrication-No.	C-132773
Kundenbestell-Nr. / Customer's order No.	BC 190548	Unterauftrag-Nr. / Position-No.	001
		Schritt-Nr. / Seqence-No.	--
Bezeichnung / Object	P-TEV DN15/PN25 C-Ps	Anzahl / Quantity	1
Zeichnungs-Nr. / Drawing-No.	970441		
Ventil-Nr. / Valve-No.	CV 8		

Teile mit Abnahmeprüfzegnis 3.1.B nach EN 10204
Parts With Inspection certificate 3.1.B nach EN 10204

Zeichn.-Nr. Drawing-No	Pos.	Benennung Part	Stk. Pc. Obj.	Werkstoff Material	Chargen-Nr. Heat-No.	Zeugnis-Nr. Cert.-No.	Typ Typ	Hersteller Manufactur
32212	1	Body ø 38 Gehäuse	1	1.4435	108928	3454	3.1B	Krupp Hoesch
32213	2	Nozzle ø 21,3/17,3 Stutzen	1	1.4435	A792302	2046	3.1B	Sumitomo
34275	3	Seat part ø 30 Sitzstutzen	1	1.4435	515030	3587	3.1B	Ugine-Savoie
32452	4	Threaded fitting ø 90 Gewindeteil	1	1.4435	651026	3887	3.1B	Ugine-Savoie
	5	Pipe ø 24/22 Rohr	1	316L	825167	3794	3.1B	Precitube
81465	6	Bellows Balg	1	316L	DK47	3813	3.1B	Senior

Alle übrigen Teile mit Werkszeugnis 2.2 nach EN 10204
All further parts with test report 2.2 to EN 10204

Werkszeugnis 2.2 nach EN 10204: Wir bestätigen, aufgrund der laufenden Betriebs-Aufzeichnungen dass sämtliche Teile aus den vorgeschriebenen Werkstoffen hergestell wurden.

Test report 2.2 to EN 10204: On the basis of continous fabrication records, we certify, that all parts have been manufactured in the prescribed materials.

Bemerkungen:
Remarks:

Datum / Date: 25.07.97/BR

Hersteller / Manufacturer

WEKA AG
Schürlistrasse 8
CH-8344 Bäretswil

WEKA AG, Schürlistr. 8, CH-8344 Bäretswil, Telefon 01/939 29 59, Fax 01/939 29 63

Protokoll / Record

BESCHEINIGUNG ÜBER VERWENDETE WEKSTOFFE
CERTIFICATE OF USED MATERIALS

Kunde / Customer	Ansaldo Energia s. p. a., I-16125 Genova	Auftrags-No. / Fabrication-No.	C-132774
Kundenbestell-Nr. / Customer's order No.	BC 190548	Unterauftrag-Nr. / Position-No.	001
		Schritt-Nr. / Seqence-No.	--
Bezeichnung / Object	H-TEV DN10/PN25 D-man	Anzahl / Quantity	1
Zeichnungs-Nr. / Drawing-No.	970323		
Ventil-Nr. / Valve-No.	MV 1		

Teile mit Abnahmeprüfzegnis 3.1.B nach EN 10204
Parts With Inspection certificate 3.1.B nach EN 10204

Zeichn.-Nr. Drawing-No	Pos.	Benennung Part	Stk. Pc. Obj.	Werkstoff Material	Chargen-Nr. Heat-No.	Zeugnis-Nr. Cert.-No.	Typ Typ	Hersteller Manufactur
34601	1	Body ø 32 Gehäuse	1	1.4435	515030	3587	3.1B	Ugine-Savoie
34599	2	Nozzle ø 17,2/14 Stutzen	1	1.4435	160847	3711	3.1B	AST
34600	3	Seat part ø 28 Sitzstutzen	1	1.4435	420038	3386	3.1B	Ugine-Savoie
35059	4	Threaded fitting ø 90 Gewindeteil	1	1.4435	651026	3887	3.1B	Ugine-Savoie
35060	5	Pipe ø 18/16 Pipe	1	316L	468582	3237	3.1B	Fine Tubes
81465	6	Bellows Balg	1	316L	233266	3667	3.1B	Senior

Alle übrigen Teile mit Werkszeugnis 2.2 nach EN 10204
All further parts with test report 2.2 to EN 10204

Werkszeugnis 2.2 nach EN 10204: Wir bestätigen, aufgrund der laufenden Betriebs-Aufzeichnungen dass sämtliche Teile aus den vorgeschriebenen Werkstoffen hergestell wurden.

Test report 2.2 to EN 10204: On the basis of continous fabrication records, we certify, that all parts have been manufactured in the prescribed materials.

Bemerkungen:
Remarks:

Datum / Date: 25.07.97/BR

Hersteller / Manufacturer

WEKA AG
Schürlistrasse 8
CH-8344 Bäretswil

WEKA AG, Schürlistr. 8, CH-8344 Bäretswil, Telefon 01/939 29 59, Fax 01/939 29 63

Protokoll / Record

BESCHEINIGUNG ÜBER VERWENDETE WEKSTOFFE
CERTIFICATE OF USED MATERIALS

Kunde / Customer	Ansaldo Energia s. p. a., I-16125 Genova	Auftrags-No. / Fabrication-No.	C-132775
Kundenbestell-Nr. / Customer's order No.	BC 190548	Unterauftrag-Nr. / Position-No.	001
		Schritt-Nr. / Seqence-No.	--
Bezeichnung / Object	P-TEV DN40/PN25 D-Po	Anzahl / Quantity	1
Zeichnungs-Nr. / Drawing-No.	970322		
Ventil-Nr. / Valve-No.	V 4		

Teile mit Abnahmeprüfzegnis 3.1.B nach EN 10204
Parts With Inspection certificate 3.1.B nach EN 10204

Zeichn.-Nr. Drawing-No	Pos.	Benennung Part	Stk. Pc. Obj.	Werkstoff Material	Chargen-Nr. Heat-No.	Zeugnis-Nr. Cert.-No.	Typ Typ	Hersteller Manufactur
34427	1	Body ø 90 Gehäuse	1	1.4435	250815	3766	3.1B	Valbruna s.r.l.
34428	2	Nozzle ø 48,3/41,8 Stutzen	1	1.4435	433217	3476	3.1B	Sandvik
34426	3	Seat part ø 80 Sitzstutzen	1	1.4435	520035	3647	3.1B	Ugine-Savoie
34445	4	Threaded fitting ø 90 Gewindeteil	1	1.4435	651026	3887	3.1B	Ugine-Savoie
34422	5	Pipe ø 57/51,2 Rohr	1	1.4435	438959	3757	3.1B	Sandvik
82200	6	Bellows Balg	2	316L	467642	3143	3.1B	LNI

Alle übrigen Teile mit Werkszeugnis 2.2 nach EN 10204
All further parts with test report 2.2 to EN 10204

Werkszeugnis 2.2 nach EN 10204: Wir bestätigen, aufgrund der laufenden Betriebs-Aufzeichnungen dass sämtliche Teile aus den vorgeschriebenen Werkstoffen hergestell wurden.

Test report 2.2 to EN 10204: On the basis of continous fabrication records, we certify, that all parts have been manufactured in the prescribed materials.

Bemerkungen:
Remarks:

Datum / Date: 25.07.97/BR

Hersteller / Manufacturer

WEKA AG
Schürlistrasse 8
CH-8344 Bäretswil

WEKA AG, Schürlistr. 8, CH-8344 Bäretswil, Telefon 01/939 29 59, Fax 01/939 29 63

Protokoll / Record

WERKSPRÜFZEUGNIS 2.3 EN 10204
SPECIFIC TEST REPORT 2.3 EN 10204

Kunde / Customer	Ansaldo Energia s. p. a., I-16125 Genova	Auftrags-No. / Fabrication-No.	C-132769
Kundenbestell-Nr. / Customer's order No.	BC 190548	Unterauftrag-Nr. / Position-No.	001
		Schritt-Nr. / Seqence-No.	--
Bezeichnung / Object	P-WEV DN10/PN25 C-Po	Anzahl / Quantity	1
Zeichnungs-Nr. / Drawing-No.	970304		
Ventil-Nr. / Valve-No.	CV 1		
Prüfspezifikation / Testing specification	WEKA AG, CH-8344 Bäretswil	Rev. Nr. / No.	O

Massprüfung

Abmassprüfungen aller Anschlussmasse und Aussenmasse, Ventilbohrung und Hub wurde durchgeführt und entsprechen den Spezifikationen.

Dimensional Inspection

Dimensional Inspection of all connecting and outside dimensions, of valve bore and stroke was executed and was found in accordance with the specifications

Funktionsprüfung

Funktionsprüfung am montierten und eingestellten Ventil auf reibungsfreien Lauf und Kontrolle aller Steuerausrüstung wurde durchgeführt und entspricht den Spezifikationen.

Functional Inspection

Functional Inspection of the mounted and adjusted valve to verify frictionless moving and to check of all relevant control equipments was executed and was found in accordance with the specifications.

Wir bestätigen aufgrund der Ergebnisse der durchgeführten Prüfungen sowie aufgrund der laufenden Betriebsaufschreibungen, dass die Lieferung den Vereinbarungen bei der Bestellung entspricht.

On the basis of results of executed tests as well as on the basis of running fabrication records, we certify that the delivery is in accordance to the order specifications.

Bemerkungen:
Remarks:

Prüfstelle / Inspection / Examination	Hersteller / Manufacturer
Name: [illegible]	**WEKA AG** Schürlistrasse 8 CH-8344 Bäretswil
Datum / Date: 21.7.97	[signature]

WEKA AG, Schürlistr. 8, CH-8344 Bäretswil, Telefon 01/939 29 59, Fax 01/939 29 63

Protokoll / Record

WERKSPRÜFZEUGNIS 2.3 EN 10204
SPECIFIC TEST REPORT 2.3 EN 10204

Kunde / Customer	Ansaldo Energia s. p. a., I-16125 Genova	Auftrags-No. / Fabrication-No.	C-132770
Kundenbestell-Nr. / Customer's order No.	BC 190548	Unterauftrag-Nr. / Position-No.	001
		Schritt-Nr. / Seqence-No.	--
Bezeichnung / Object	P-TEV DN10/PN25 C-Ps	Anzahl / Quantity	1
Zeichnungs-Nr. / Drawing-No.	970314		
Ventil-Nr. / Valve-No.	CV 2		
Prüfspezifikation / Testing specification	WEKA AG, CH-8344 Bäretswil	Rev. Nr. / No.	O

Massprüfung

Abmassprüfungen aller Anschlussmasse und Aussenmasse, Ventilbohrung und Hub wurde durchgeführt und entsprechen den Spezifikationen.

Dimensional Inspection

Dimensional Inspection of all connecting and outside dimensions, of valve bore and stroke was executed and was found in accordance with the specifications

Funktionsprüfung

Funktionsprüfung am montierten und eingestellten Ventil auf reibungsfreien Lauf und Kontrolle aller Steuerausrüstung wurde durchgeführt und entspricht den Spezifikationen.

Functional Inspection

Functional Inspection of the mounted and adjusted valve to verify frictionless moving and to check of all relevant control equipments was executed and was found in accordance with the specifications.

Wir bestätigen aufgrund der Ergebnisse der durchgeführten Prüfungen sowie aufgrund der laufenden Betriebsaufschreibungen, dass die Lieferung den Vereinbarungen bei der Bestellung entspricht.

On the basis of results of executed tests as well as on the basis of running fabrication records, we certify that the delivery is in accordance to the order specifications.

Bemerkungen:
Remarks:

Prüfstelle / Inspection / Examination	Hersteller / Manufacturer
Name	**WEKA AG** Schürlistrasse 8 CH-8344 Bäretswil
Datum / Date	

WEKA AG, Schürlistr. 8, CH-8344 Bäretswil, Telefon 01/939 29 59, Fax 01/939 29 63

Protokoll / Record

WERKSPRÜFZEUGNIS 2.3 EN 10204
SPECIFIC TEST REPORT 2.3 EN 10204

Kunde / Customer	Ansaldo Energia s. p. a., I-16125 Genova	Auftrags-No. / Fabrication-No.	C-132771
Kundenbestell-Nr. / Customer's order No.	BC 190548	Unterauftrag-Nr. / Position-No.	001
		Schritt-Nr. / Seqence-No.	--
Bezeichnung / Object	P-TEV DN10/PN25 C-Po	Anzahl / Quantity	1
Zeichnungs-Nr. / Drawing-No.	970321		
Ventil-Nr. / Valve-No.	CV 3		
Prüfspezifikation / Testing specification	WEKA AG, CH-8344 Bäretswil	Rev. Nr. / No.	O

Massprüfung

Abmassprüfungen aller Anschlussmasse und Aussenmasse, Ventilbohrung und Hub wurde durchgeführt und entsprechen den Spezifikationen.

Dimensional Inspection

Dimensional Inspection of all connecting and outside dimensions, of valve bore and stroke was executed and was found in accordance with the specifications

Funktionsprüfung

Funktionsprüfung am montierten und eingestellten Ventil auf reibungsfreien Lauf und Kontrolle aller Steuerausrüstung wurde durchgeführt und entspricht den Spezifikationen.

Functional Inspection

Functional Inspection of the mounted and adjusted valve to verify frictionless moving and to check of all relevant control equipments was executed and was found in accordance with the specifications.

Wir bestätigen aufgrund der Ergebnisse der durchgeführten Prüfungen sowie aufgrund der laufenden Betriebsaufschreibungen, dass die Lieferung den Vereinbarungen bei der Bestellung entspricht.

On the basis of results of executed tests as well as on the basis of running fabrication records, we certify that the delivery is in accordance to the order specifications.

Bemerkungen:
Remarks:

Prüfstelle / Inspection / Examination	Hersteller / Manufacturer
Name: T. Klein Datum / Date: 22.7.97	**WEKA AG** Schürlistrasse 8 CH-8344 Bäretswil

WEKA AG, Schürlistr. 8, CH-8344 Bäretswil, Telefon 01/939 29 59, Fax 01/939 29 63

Protokoll / Record

WERKSPRÜFZEUGNIS 2.3 EN 10204
SPECIFIC TEST REPORT 2.3 EN 10204

Kunde / Customer	Ansaldo Energia s. p. a., I-16125 Genova	Auftrags-No. / Fabrication-No.	C-132772
Kundenbestell-Nr. / Customer's order No.	BC 190548	Unterauftrag-Nr. / Position-No.	001
		Schritt-Nr. / Seqence-No.	--
Bezeichnung / Object	P-TEV DN10/PN25 C-Ps	Anzahl / Quantity	1
Zeichnungs-Nr. / Drawing-No.	970314		
Ventil-Nr. / Valve-No.	CV 4		
Prüfspezifikation / Testing specification	WEKA AG, CH-8344 Bäretswil	Rev. Nr. / No.	O

Massprüfung

Abmassprüfungen aller Anschlussmasse und Aussenmasse, Ventilbohrung und Hub wurde durchgeführt und entsprechen den Spezifikationen.

Dimensional Inspection

Dimensional Inspection of all connecting and outside dimensions, of valve bore and stroke was executed and was found in accordance with the specifications

Funktionsprüfung

Funktionsprüfung am montierten und eingestellten Ventil auf reibungsfreien Lauf und Kontrolle aller Steuerausrüstung wurde durchgeführt und entspricht den Spezifikationen.

Functional Inspection

Functional Inspection of the mounted and adjusted valve to verify frictionless moving and to check of all relevant control equipments was executed and was found in accordance with the specifications.

Wir bestätigen aufgrund der Ergebnisse der durchgeführten Prüfungen sowie aufgrund der laufenden Betriebsaufschreibungen, dass die Lieferung den Vereinbarungen bei der Bestellung entspricht.

On the basis of results of executed tests as well as on the basis of running fabrication records, we certify that the delivery is in accordance to the order specifications.

Bemerkungen:
Remarks:

Prüfstelle / Inspection / Examination	Hersteller / Manufacturer
Name: N. Ahsi	**WEKA AG** Schürlistrasse 8 CH-8344 Bäretswil
Datum / Date: 23.7.97	

WEKA AG, Schürlistr. 8, CH-8344 Bäretswil, Telefon 01/939 29 59, Fax 01/939 29 63

Protokoll / Record

WERKSPRÜFZEUGNIS 2.3 EN 10204
SPECIFIC TEST REPORT 2.3 EN 10204

Kunde / Customer	Ansaldo Energia s. p. a., I-16125 Genova	Auftrags-No. / Fabrication-No.	C-132773
Kundenbestell-Nr. / Customer's order No.	BC 190548	Unterauftrag-Nr. / Position-No.	001
		Schritt-Nr. / Seqence-No.	--
Bezeichnung / Object	P-TEV DN15/PN25 C-Ps	Anzahl / Quantity	1
Zeichnungs-Nr. / Drawing-No.	970441		
Ventil-Nr. / Valve-No.	CV 8		
Prüfspezifikation / Testing specification	WEKA AG, CH-8344 Bäretswil	Rev. Nr. / No.	O

Massprüfung

Abmassprüfungen aller Anschlussmasse und Aussenmasse, Ventilbohrung und Hub wurde durchgeführt und entsprechen den Spezifikationen.

Dimensional Inspection

Dimensional Inspection of all connecting and outside dimensions, of valve bore and stroke was executed and was found in accordance with the specifications

Funktionsprüfung

Funktionsprüfung am montierten und eingestellten Ventil auf reibungsfreien Lauf und Kontrolle aller Steuerausrüstung wurde durchgeführt und entspricht den Spezifikationen.

Functional Inspection

Functional Inspection of the mounted and adjusted valve to verify frictionless moving and to check of all relevant control equipments was executed and was found in accordance with the specifications.

Wir bestätigen aufgrund der Ergebnisse der durchgeführten Prüfungen sowie aufgrund der laufenden Betriebsaufschreibungen, dass die Lieferung den Vereinbarungen bei der Bestellung entspricht.

On the basis of results of executed tests as well as on the basis of running fabrication records, we certify that the delivery is in accordance to the order specifications.

Bemerkungen:
Remarks:

Prüfstelle / Inspection / Examination	Hersteller / Manufacturer
Name: T. Ulmer Datum / Date: 29.7.97	**WEKA AG** Schürlistrasse 8 CH-8344 Bäretswil

WEKA AG, Schürlistr. 8, CH-8344 Bäretswil, Telefon 01/939 29 59, Fax 01/939 29 63

Protokoll / Record

WERKSPRÜFZEUGNIS 2.3 EN 10204
SPECIFIC TEST REPORT 2.3 EN 10204

Kunde / Customer	Ansaldo Energia s. p. a., I-16125 Genova	Auftrags-No. / Fabrication-No.	C-132774
Kundenbestell-Nr. / Customer's order No.	BC 190548	Unterauftrag-Nr. / Position-No.	001
		Schritt-Nr. / Seqence-No.	--
Bezeichnung / Object	H-TEV DN10/PN25 D-man	Anzahl / Quantity	1
Zeichnungs-Nr. / Drawing-No.	970323		
Ventil-Nr. / Valve-No.	MV 1		
Prüfspezifikation / Testing specification	WEKA AG, CH-8344 Bäretswil	Rev. Nr. / No.	O

Massprüfung

Abmassprüfungen aller Anschlussmasse und Aussenmasse, Ventilbohrung und Hub wurde durchgeführt und entsprechen den Spezifikationen.

Dimensional Inspection

Dimensional Inspection of all connecting and outside dimensions, of valve bore and stroke was executed and was found in accordance with the specifications

Funktionsprüfung

Funktionsprüfung am montierten und eingestellten Ventil auf reibungsfreien Lauf und Kontrolle aller Steuerausrüstung wurde durchgeführt und entspricht den Spezifikationen.

Functional Inspection

Functional Inspection of the mounted and adjusted valve to verify frictionless moving and to check of all relevant control equipments was executed and was found in accordance with the specifications.

Wir bestätigen aufgrund der Ergebnisse der durchgeführten Prüfungen sowie aufgrund der laufenden Betriebsaufschreibungen, dass die Lieferung den Vereinbarungen bei der Bestellung entspricht.

On the basis of results of executed tests as well as on the basis of running fabrication records, we certify that the delivery is in accordance to the order specifications.

Bemerkungen:
Remarks:

Prüfstelle / Inspection / Examination	Hersteller / Manufacturer
Name	**WEKA AG** Schürlistrasse 8 CH-8344 Bäretswil
Datum / Date 11.1.99	

WEKA AG, Schürlistr. 8, CH-8344 Bäretswil, Telefon 01/939 29 59, Fax 01/939 29 63

Protokoll / Record

WERKSPRÜFZEUGNIS 2.3 EN 10204
SPECIFIC TEST REPORT 2.3 EN 10204

Kunde / Customer	Ansaldo Energia s. p. a., I-16125 Genova	Auftrags-No. / Fabrication-No.	C-132775
Kundenbestell-Nr. / Customer's order No.	BC 190548	Unterauftrag-Nr. / Position-No.	001
		Schritt-Nr. / Seqence-No.	--
Bezeichnung / Object	P-TEV DN40/PN25 D-Po	Anzahl / Quantity	1
Zeichnungs-Nr. / Drawing-No.	970322		
Ventil-Nr. / Valve-No.	V 4		
Prüfspezifikation / Testing specification	WEKA AG, CH-8344 Bäretswil	Rev. Nr. / No.	O

Massprüfung

Abmassprüfungen aller Anschlussmasse und Aussenmasse, Ventilbohrung und Hub wurde durchgeführt und entsprechen den Spezifikationen.

Dimensional Inspection

Dimensional Inspection of all connecting and outside dimensions, of valve bore and stroke was executed and was found in accordance with the specifications

Funktionsprüfung

Funktionsprüfung am montierten und eingestellten Ventil auf reibungsfreien Lauf und Kontrolle aller Steuerausrüstung wurde durchgeführt und entspricht den Spezifikationen.

Functional Inspection

Functional Inspection of the mounted and adjusted valve to verify frictionless moving and to check of all relevant control equipments was executed and was found in accordance with the specifications.

Wir bestätigen aufgrund der Ergebnisse der durchgeführten Prüfungen sowie aufgrund der laufenden Betriebsaufschreibungen, dass die Lieferung den Vereinbarungen bei der Bestellung entspricht.

On the basis of results of executed tests as well as on the basis of running fabrication records, we certify that the delivery is in accordance to the order specifications.

Bemerkungen:
Remarks:

Prüfstelle
Inspection / Examination

Name: T. Steiner
Datum / Date: 21.7.97

Hersteller / Manufacturer

WEKA AG
Schürlistrasse 8
CH-8344 Bäretswil

WEKA AG, Schürlistr. 8, CH-8344 Bäretswil, Telefon 01/939 29 59, Fax 01/939 29 63

Protokoll / Record

DRUCKPRÜFUNG
PRESSURE TEST

Kunde / Customer	Ansaldo Energia s. p. a., I-16125 Genova	Auftrags-No. / Fabrication-No.	C-132769
Kundenbestell-Nr. / Customer's order No.	BC 190548	Unterauftrag-Nr. / Position-No.	001
		Schritt-Nr. / Seqence-No.	--
Bezeichnung / Object	WEV Gehäuse DN10/PN25 WEV body DN10/PN25	Anzahl / Quantity	1
Zeichnungs-Nr. / Drawing-No.	35164		
Ventil-Nr. / Valve-No.	CV 1		
Prüfspezifikation / Testing specification	WEKA AG, CH-8344 Bäretswil	Rev. Nr. / No.	O

Betriebsdruck Opreration pressure	----
Nenndruck Nominal pressure	PN25
Prüfdruck Test pressure	37,5 bar (g)
Prüfmedium Test liquid	He-Gas
Haltezeit Test duration	2 Min
Prüfort Test place	Werk / Factory: WEKA AG, CH-8344 Bäretswil
Prüfergebnis Test result	i.o. keine Leckage o.k. no leackage

Bemerkungen:
Remarks:

Prüfstelle / Inspection / Examination	Abnahme durch / Accepted by	Hersteller / Manufacturer
Name: [illegible] Datum / Date: 21.7.97	Name: ..... Datum / Date:	**WEKA AG** Schürlistrasse 8 CH-8344 Bäretswil

WEKA AG, Schürlistr. 8, CH-8344 Bäretswil, Telefon 01/939 29 59, Fax 01/939 29 63

Protokoll / Record

DRUCKPRÜFUNG
PRESSURE TEST

Kunde / Customer	Ansaldo Energia s. p. a., I-16125 Genova	Auftrags-No. / Fabrication-No.	C-132770
Kundenbestell-Nr. / Customer's order No.	BC 190548	Unterauftrag-Nr. / Position-No.	001
		Schritt-Nr. / Seqence-No.	--
Bezeichnung / Object	TEV Gehäuse DN10/PN25 TEV body DN10/PN25	Anzahl / Quantity	1
Zeichnungs-Nr. / Drawing-No.	35058/600		
Ventil-Nr. / Valve-No.	CV 2		
Prüfspezifikation / Testing specification	WEKA AG, CH-8344 Bäretswil	Rev. Nr. / No.	O

Betriebsdruck Opreration pressure	----
Nenndruck Nominal pressure	PN25
Prüfdruck Test pressure	37,5 bar (g)
Prüfmedium Test liquid	He
Haltezeit Test duration	2 Min
Prüfort Test place	Werk / Factory: WEKA AG, CH-8344 Bäretswil
Prüfergebnis Test result	i.o. keine Leckage o.k. no leackage

Bemerkungen:
Remarks:

Prüfstelle / Inspection / Examination	Abnahme durch / Accepted by	Hersteller / Manufacturer
Name: T. Steiner Datum / Date: 21.7.97	Name: ..... Datum / Date:	**WEKA AG** Schürlistrasse 8 CH-8344 Bäretswil

WEKA AG, Schürlistr. 8, CH-8344 Bäretswil, Telefon 01/939 29 59, Fax 01/939 29 63

Protokoll / Record

DRUCKPRÜFUNG
PRESSURE TEST

Kunde / Customer	Ansaldo Energia s. p. a., I-16125 Genova	Auftrags-No. / Fabrication-No.	C-132771
Kundenbestell-Nr. / Customer's order No.	BC 190548	Unterauftrag-Nr. / Position-No.	001
		Schritt-Nr. / Seqence-No.	--
Bezeichnung / Object	TEV Gehäuse DN10/PN25 TEV body DN10/PN25	Anzahl / Quantity	1
Zeichnungs-Nr. / Drawing-No.	35058/600		
Ventil-Nr. / Valve-No.	CV 3		
Prüfspezifikation / Testing specification	WEKA AG, CH-8344 Bäretswil	Rev. Nr. / No.	O

Betriebsdruck Opreration pressure	----
Nenndruck Nominal pressure	PN25
Prüfdruck Test pressure	37,5 bar (g)
Prüfmedium Test liquid	He
Haltezeit Test duration	2 Min
Prüfort Test place	Werk / Factory: WEKA AG, CH-8344 Bäretswil
Prüfergebnis Test result	i.o. keine Leckage o.k. no leackage

Bemerkungen:
Remarks:

Prüfstelle / Inspection / Examination	Abnahme durch / Accepted by	Hersteller / Manufacturer
Name: T. Bleuer Datum / Date: 22.7.92	Name: Datum / Date:	**WEKA AG** Schürlistrasse 8 CH-8344 Bäretswil

WEKA AG, Schürlistr. 8, CH-8344 Bäretswil, Telefon 01/939 29 59, Fax 01/939 29 63

Protokoll / Record

DRUCKPRÜFUNG
PRESSURE TEST

Kunde / Customer	Ansaldo Energia s. p. a., I-16125 Genova	Auftrags-No. / Fabrication-No.	C-132772
Kundenbestell-Nr. / Customer's order No.	BC 190548	Unterauftrag-Nr. / Position-No.	001
		Schritt-Nr. / Seqence-No.	--
Bezeichnung / Object	TEV Gehäuse DN10/PN25 TEV body DN10/PN25	Anzahl / Quantity	1
Zeichnungs-Nr. / Drawing-No.	35058/600		
Ventil-Nr. / Valve-No.	CV 4		
Prüfspezifikation / Testing specification	WEKA AG, CH-8344 Bäretswil	Rev. Nr. / No.	O

Betriebsdruck Opreration pressure	----
Nenndruck Nominal pressure	PN25
Prüfdruck Test pressure	37,5 bar (g)
Prüfmedium Test liquid	He-Gas
Haltezeit Test duration	2 Min
Prüfort Test place	Werk / Factory: WEKA AG, CH-8344 Bäretswil
Prüfergebnis Test result	i.o. keine Leckage o.k. no leackage

Bemerkungen:
Remarks:

Prüfstelle / Inspection / Examination	Abnahme durch / Accepted by	Hersteller / Manufacturer
Name: Abei N.	Name:	**WEKA AG** Schürlistrasse 8 CH-8344 Bäretswil
Datum / Date: 23.7.97	Datum / Date:	

WEKA AG, Schürlistr. 8, CH-8344 Bäretswil, Telefon 01/939 29 59, Fax 01/939 29 63

Protokoll / Record

DRUCKPRÜFUNG
PRESSURE TEST

Kunde / Customer	Ansaldo Energia s. p. a., I-16125 Genova	Auftrags-No. / Fabrication-No.	C-132773
Kundenbestell-Nr. / Customer's order No.	BC 190548	Unterauftrag-Nr. / Position-No.	001
		Schritt-Nr. / Seqence-No.	--
Bezeichnung / Object	TEV Gehäuse DN15/PN25 TEV body DN15/PN25	Anzahl / Quantity	1
Zeichnungs-Nr. / Drawing-No.	30585/735		
Ventil-Nr. / Valve-No.	CV 8		
Prüfspezifikation / Testing specification	WEKA AG, CH-8344 Bäretswil	Rev. Nr. / No.	O

Betriebsdruck Opreration pressure	----
Nenndruck Nominal pressure	PN25
Prüfdruck Test pressure	37,5 bar (g)
Prüfmedium Test liquid	He
Haltezeit Test duration	2 Min
Prüfort Test place	Werk / Factory: WEKA AG, CH-8344 Bäretswil
Prüfergebnis Test result	i.o. keine Leckage o.k. no leackage

Bemerkungen:
Remarks:

Prüfstelle / Inspection / Examination	Abnahme durch / Accepted by	Hersteller / Manufacturer
Name: T. Steiner Datum / Date: 21.7.97	Name: Datum / Date:	**WEKA AG** Schürlistrasse 8 CH-8344 Bäretswil

WEKA AG, Schürlistr. 8, CH-8344 Bäretswil, Telefon 01/939 29 59, Fax 01/939 29 63

Protokoll / Record

DRUCKPRÜFUNG
PRESSURE TEST

Kunde / Customer	Ansaldo Energia s. p. a., I-16125 Genova	Auftrags-No. / Fabrication-No.	C-132774
Kundenbestell-Nr. / Customer's order No.	BC 190548	Unterauftrag-Nr. / Position-No.	001
		Schritt-Nr. / Seqence-No.	--
Bezeichnung / Object	TEV Gehäuse DN10/PN25 TEV body DN10/PN25	Anzahl / Quantity	1
Zeichnungs-Nr. / Drawing-No.	35058/600		
Ventil-Nr. / Valve-No.	MV 1		
Prüfspezifikation / Testing specification	WEKA AG, CH-8344 Bäretswil	Rev. Nr. / No.	O

Betriebsdruck Opreration pressure	----
Nenndruck Nominal pressure	PN25
Prüfdruck Test pressure	37,5 bar (g)
Prüfmedium Test liquid	He
Haltezeit Test duration	2 Min
Prüfort Test place	Werk / Factory: WEKA AG, CH-8344 Bäretswil
Prüfergebnis Test result	i.o. keine Leckage o.k. no leackage

Bemerkungen:
Remarks:

Prüfstelle / Inspection / Examination	Abnahme durch / Accepted by	Hersteller / Manufacturer
Name	Name	**WEKA AG** Schürlistrasse 8 CH-8344 Bäretswil
Datum / Date 21.7.99	Datum / Date	

WEKA AG, Schürlistr. 8, CH-8344 Bäretswil, Telefon 01/939 29 59, Fax 01/939 29 63

Protokoll / Record

DRUCKPRÜFUNG
PRESSURE TEST

Kunde / Customer	Ansaldo Energia s. p. a., I-16125 Genova	Auftrags-No. / Fabrication-No.	C-132775
Kundenbestell-Nr. / Customer's order No.	BC 190548	Unterauftrag-Nr. / Position-No.	001
		Schritt-Nr. / Seqence-No.	--
Bezeichnung / Object	TEV Gehäuse DN40/PN25 TEV body DN40/PN25	Anzahl / Quantity	1
Zeichnungs-Nr. / Drawing-No.	34542/400		
Ventil-Nr. / Valve-No.	V 4		
Prüfspezifikation / Testing specification	WEKA AG, CH-8344 Bäretswil	Rev. Nr. / No.	O

Betriebsdruck Opreration pressure	----
Nenndruck Nominal pressure	PN25
Prüfdruck Test pressure	37,5 bar (g)
Prüfmedium Test liquid	He
Haltezeit Test duration	2 Min
Prüfort Test place	Werk / Factory: WEKA AG, CH-8344 Bäretswil
Prüfergebnis Test result	i.o. keine Leckage o.k. no leackage

Bemerkungen:
Remarks:

Prüfstelle / Inspection / Examination	Abnahme durch / Accepted by	Hersteller / Manufacturer
Name: T. Heiner	Name:	WEKA AG Schürlistrasse 8 CH-8344 Bäretswil
Datum / Date: 21.7.97	Datum / Date:	

WEKA AG, Schürlistr. 8, CH-8344 Bäretswil, Telefon 01/939 29 59, Fax 01/939 29 63

Protokoll / Record

HELIUM - DICHTHEITSPRÜFUNG
HELIUM - TIGHTNESS TEST

Seite / Page 1 von / of 1 Seiten / Pages

Kunde / Customer	Ansaldo Energia s. p. a., I-16125 Genova	Auftrags-No. / Fabrication-No.	C-132769
Kundenbestell-Nr. / Customer's order No.	BC 190548	Unterauftrag-Nr. / Position-No.	001
Schritt-Nr. / Seqence-No.	--		
Bezeichnung / Object	P-WEV DN10/PN25 C-Po	Anzahl / Quantity	1
Zeichnungs-Nr. / Drawing-No.	970304		
Ventil-Nr. / Valve-No.	CV 1		
Prüfspezifikation / Testing specification	WEKA AG, CH-8344 Bäretswil	Rev. Nr. / No.	O

Prüfung / Testing

[X] Schweissnaht Nr. / Weld No. Alle / All Verfahren 1a, 2c	[X] O-Ring / O-ring Alle / All Verfahren 1a, 2c	[X] Ventil Sitz / Valve seat Δp = 20bar Verfahren 2d
[X] Sicherheitsabdichtung / Security seal Δp = 3bar Verfahren 2a	[ ] Stopfbüchse / packing	[ ]

Fehlerkriterien / Acceptance Standard

Schweissnähte, Sicherheitsabdichtung / Welding-Seams, Security seal	$Q \leq 1 \cdot 10^{-7}$ mbar l/sec
O-Ringe / O-Rings	$Q \leq 1 \cdot 10^{-6}$ mbar l/sec
Sitz / Seat	$Q \leq 1 \cdot 10^{-4}$ mbar l/sec

Prüfverfahren / Testing Procedure

1 Vakuum Methode (innen / aussen 0:1) vacuum method (inlet / outlet 0:1)	2 Ueberdruck Methode (innen / aussen >1:≤1) pressurized method (inlet / outlet >1:≤1)
[X] 1a Leck suchen (He sprühen) / leak search (He spray) Schweissnähte / Welding-Seams O-Ringe / O-Rings	[X] 2a Leck suchen (He schnüffeln) / leak search (He snifting) Sicherheitsabdichtung / Security seal
[ ] 1b integral Methode (örtlich mit Plastikhülle) integral method (local with plasticenvelope)	[ ] 2b integral Methode (örtlich mit Plastikhülle) integral method (local with plasticenvelope)
[ ] 1c integral Methode (mit Plastikhülle) integral method (with plasticenvelope)	[X] 2c integral Methode (mit Plastikhülle) integral method (with plasticenvelope) Schweissnähte / Welding-Seams Δp = 20bar O-Ringe / O-Rings Δp = 20bar
[ ]	[X] 2d integral Methode (Vacuum Kammer) integral method (vacuum chamber) Sitz / Seat

Befund / Assessment

Fehlerkriterien / Acceptance standard: [X] erfüllt / acceptable [ ] nicht erfüllt / unacceptable

Prüfgerät / Testing apparatus Alcatel - ASM 180t	Kalibrierung / Calibration Test Leck / Test Leakage 1,4 · 10^{-7} mbar l/sec	Datum: / Date: 21.7.97

Bemerkungen:
Remarks:

Prüfstelle / Inspection / Examination	Abnahme durch / Accepted by	Hersteller / Manufacturer
Name: N. Ath. Datum / Date: 21.7.97	Name: ..... Datum / Date:	**WEKA AG** Schürlistrasse 8 CH-8344 Bäretswil

WEKA®

WEKA AG, Schürlistr. 8, CH-8344 Bäretswil, Telefon 01/939 29 59, Fax 01/939 29 63

Protokoll / Record

HELIUM - DICHTHEITSPRÜFUNG
HELIUM - TIGHTNESS TEST

Seite / Page 1 von / of 1 Seiten / Pages

Kunde / Customer	Ansaldo Energia s. p. a., I-16125 Genova	Auftrags-No. / Fabrication-No.	C-132770
Kundenbestell-Nr. / Customer's order No.	BC 190548	Unterauftrag-Nr. / Position-No.	001
		Schritt-Nr. / Seqence-No.	--
Bezeichnung / Object	P-TEV DN10/PN25 C-Ps	Anzahl / Quantity	1
Zeichnungs-Nr. / Drawing-No.	970314		
Ventil-Nr. / Valve-No.	CV 2		
Prüfspezifikation / Testing specification	WEKA AG, CH-8344 Bäretswil	Rev. Nr. / No.	O

Prüfung / Testing

[X] Schweissnaht Nr. / Weld No. Alle / All Verfahren 1a, 2c	[X] O-Ring / O-ring Alle / All Verfahren 1a, 2c	[X] Ventil Sitz / Valve seat $\Delta p = 20$bar Verfahren 2d
[X] Sicherheitsabdichtung / Security seal $\Delta p = 3$bar Verfahren 2a	[ ] Stopfbüchse / packing	[ ]

Fehlerkriterien / Acceptance Standard

Schweissnähte, Sicherheitsabdichtung / Welding-Seams, Security seal	$Q \leq 1 \cdot 10^{-7}$ mbar l/sec
O-Ringe / O-Rings	$Q \leq 1 \cdot 10^{-6}$ mbar l/sec
Sitz / Seat	$Q \leq 1 \cdot 10^{-4}$ mbar l/sec

Prüfverfahren / Testing Procedure

1 Vakuum Methode (innen / aussen 0:1) vacuum method (inlet / outlet 0:1)	2 Ueberdruck Methode (innen / aussen >1:≤1) pressurized method (inlet / outlet >1:≤1)
[X] 1a Leck suchen (He sprühen) / leak search (He spray) Schweissnähte / Welding-Seams O-Ringe / O-Rings	[X] 2a Leck suchen (He schnüffeln) / leak search (He snifting) Sicherheitsabdichtung / Security seal
[ ] 1b integral Methode (örtlich mit Plastikhülle) integral method (local with plasticenvelope)	[ ] 2b integral Methode (örtlich mit Plastikhülle) integral method (local with plasticenvelope)
[ ] 1c integral Methode (mit Plastikhülle) integral method (with plasticenvelope)	[X] 2c integral Methode (mit Plastikhülle) integral method (with plasticenvelope) Schweissnähte / Welding-Seams $\Delta p = 20$bar O-Ringe / O-Rings $\Delta p = 20$bar
[ ]	[X] 2d integral Methode (Vacuum Kammer) integral method (vacuum chamber) Sitz / Seat

Befund / Assessment

Fehlerkriterien / Acceptance standard: [X] erfüllt / acceptable [ ] nicht erfüllt / unacceptable

Prüfgerät / Testing apparatus Alcatel - ASM 180t	Kalibrierung / Calibration Test Leck / Test Leakage $1{,}4 \cdot 10^{-7}$ mbar l/sec	Datum: / Date: 21.7.97

Bemerkungen:
Remarks:

Prüfstelle / Inspection / Examination	Abnahme durch / Accepted by	Hersteller / Manufacturer
Name: T. Ekner Datum / Date: 21.7.97	Name: ..... Datum / Date:	**WEKA AG** Schürlistrasse 8 CH-8344 Bäretswil

WEKA AG, Schürlistr. 8, CH-8344 Bäretswil, Telefon 01/939 29 59, Fax 01/939 29 63

Protokoll / Record

HELIUM - DICHTHEITSPRÜFUNG
HELIUM - TIGHTNESS TEST

Seite / Page 1 von / of 1 Seiten / Pages

Kunde / Customer	Ansaldo Energia s. p. a., I-16125 Genova	Auftrags-No. / Fabrication-No.	C-132771
Kundenbestell-Nr. / Customer's order No.	BC 190548	Unterauftrag-Nr. / Position-No.	001
		Schritt-Nr. / Seqence-No.	--
Bezeichnung / Object	P-TEV DN10/PN25 C-Po	Anzahl / Quantity	1
Zeichnungs-Nr. / Drawing-No.	970321		
Ventil-Nr. / Valve-No.	CV 3		

Prüfspezifikation / Testing specification: WEKA AG, CH-8344 Bäretswil

Rev. Nr. / No.: O

Prüfung / Testing

[X] Schweissnaht Nr. / Weld No. Alle / All Verfahren 1a, 2c	[X] O-Ring / O-ring Alle / All Verfahren 1a, 2c	[X] Ventil Sitz / Valve seat Δp = 20bar Verfahren 2d
[X] Sicherheitsabdichtung / Security seal Δp = 3bar Verfahren 2a	[ ] Stopfbüchse / packing	[ ]

Fehlerkriterien / Acceptance Standard

Schweissnähte, Sicherheitsabdichtung / Welding-Seams, Security seal	$Q \leq 1 \cdot 10^{-7}$ mbar l/sec
O-Ringe / O-Rings	$Q \leq 1 \cdot 10^{-6}$ mbar l/sec
Sitz / Seat	$Q \leq 1 \cdot 10^{-4}$ mbar l/sec

Prüfverfahren / Testing Procedure

1 Vakuum Methode (innen / aussen 0:1) vacuum method (inlet / outlet 0:1)	2 Ueberdruck Methode (innen / aussen >1:≤1) pressurized method (inlet / outlet >1:≤1)
[X] 1a Leck suchen (He sprühen) / leak search (He spray) Schweissnähte / Welding-Seams O-Ringe / O-Rings	[X] 2a Leck suchen (He schnüffeln) / leak search (He snifting) Sicherheitsabdichtung / Security seal
[ ] 1b integral Methode (örtlich mit Plastikhülle) integral method (local with plasticenvelope)	[ ] 2b integral Methode (örtlich mit Plastikhülle) integral method (local with plasticenvelope)
[ ] 1c integral Methode (mit Plastikhülle) integral method (with plasticenvelope)	[X] 2c integral Methode (mit Plastikhülle) integral method (with plasticenvelope) Schweissnähte / Welding-Seams Δp = 20bar O-Ringe / O-Rings Δp = 20bar
[ ]	[X] 2d integral Methode (Vacuum Kammer) integral method (vacuum chamber) Sitz / Seat

Befund / Assessment

Fehlerkriterien / Acceptance standard: [X] erfüllt / acceptable [ ] nicht erfüllt / unacceptable

Prüfgerät / Testing apparatus Alcatel - ASM 180t	Kalibrierung / Calibration Test Leck / Test Leakage $1{,}4 \cdot 10^{-7}$ mbar l/sec	Datum: / Date: 22.7.97

Bemerkungen:
Remarks:

Prüfstelle / Inspection / Examination	Abnahme durch / Accepted by	Hersteller / Manufacturer
Name: T. Steiner Datum / Date: 22.7.97	Name: Datum / Date:	WEKA AG Schürlistrasse 8 CH-8344 Bäretswil

WEKA®

WEKA AG, Schürlistr. 8, CH-8344 Bäretswil, Telefon 01/939 29 59, Fax 01/939 29 63

Protokoll / Record

HELIUM - DICHTHEITSPRÜFUNG
HELIUM - TIGHTNESS TEST

Kunde / Customer	Ansaldo Energia s. p. a., I-16125 Genova	Auftrags-No. / Fabrication-No.	C-132772
Kundenbestell-Nr. / Customer's order No.	BC 190548	Unterauftrag-Nr. / Position-No.	001
		Schritt-Nr. / Seqence-No.	--
Bezeichnung / Object	P-TEV DN10/PN25 C-Ps	Anzahl / Quantity	1
Zeichnungs-Nr. / Drawing-No.	970314		
Ventil-Nr. / Valve-No.	CV 4		
Prüfspezifikation / Testing specification	WEKA AG, CH-8344 Bäretswil	Rev. Nr. / No.	O

Prüfung / Testing

[X] Schweissnaht Nr. / Weld No. Alle / All Verfahren 1a, 2c	[X] O-Ring / O-ring Alle / All Verfahren 1a, 2c	[X] Ventil Sitz / Valve seat Δp = 20bar Verfahren 2d
[X] Sicherheitsabdichtung / Security seal Δp = 3bar Verfahren 2a	[ ] Stopfbüchse / packing	[ ]

Fehlerkriterien / Acceptance Standard

Schweissnähte, Sicherheitsabdichtung / Welding-Seams, Security seal	$Q \leq 1 \cdot 10^{-7}$ mbar l/sec
O-Ringe / O-Rings	$Q \leq 1 \cdot 10^{-6}$ mbar l/sec
Sitz / Seat	$Q \leq 1 \cdot 10^{-4}$ mbar l/sec

Prüfverfahren / Testing Procedure

1 Vakuum Methode (innen / aussen 0:1) vacuum method (inlet / outlet 0:1)	2 Ueberdruck Methode (innen / aussen >1:≤1) pressurized method (inlet / outlet >1:≤1)
[X] 1a Leck suchen (He sprühen) / leak search (He spray) Schweissnähte / Welding-Seams O-Ringe / O-Rings	[X] 2a Leck suchen (He schnüffeln) / leak search (He snifting) Sicherheitsabdichtung / Security seal
[ ] 1b integral Methode (örtlich mit Plastikhülle) integral method (local with plasticenvelope)	[ ] 2b integral Methode (örtlich mit Plastikhülle) integral method (local with plasticenvelope)
[ ] 1c integral Methode (mit Plastikhülle) integral method (with plasticenvelope)	[X] 2c integral Methode (mit Plastikhülle) integral method (with plasticenvelope) Schweissnähte / Welding-Seams Δp = 20bar O-Ringe / O-Rings Δp = 20bar
[ ]	[X] 2d integral Methode (Vacuum Kammer) integral method (vacuum chamber) Sitz / Seat

Befund / Assessment

Fehlerkriterien / Acceptance standard	[X] erfüllt / acceptable	[ ] nicht erfüllt / unacceptable
Prüfgerät / Testing apparatus Alcatel - ASM 180t	Kalibrierung / Calibration Test Leck / Test Leakage $1{,}4 \cdot 10^{-7}$ mbar l/sec	Datum: / Date: 23.7.97

Bemerkungen:
Remarks:

Prüfstelle / Inspection / Examination	Abnahme durch / Accepted by	Hersteller / Manufacturer
Name: N. Ather Datum / Date: 23.7.97	Name: ..... Datum / Date:	**WEKA AG** Schürlistrasse 8 CH-8344 Bäretswil

WEKA AG, Schürlistr. 8, CH-8344 Bäretswil, Telefon 01/939 29 59, Fax 01/939 29 63

Protokoll / Record

HELIUM - DICHTHEITSPRÜFUNG
HELIUM - TIGHTNESS TEST

Seite / Page 1 von / of 1 Seiten / Pages

Kunde / Customer	Ansaldo Energia s. p. a., I-16125 Genova	Auftrags-No. / Fabrication-No.	C-132773
Kundenbestell-Nr. / Customer's order No.	BC 190548	Unterauftrag-Nr. / Position-No.	001
Schritt-Nr. / Seqence-No.	--		
Bezeichnung / Object	P-TEV DN15/PN25 C-Ps	Anzahl / Quantity	1
Zeichnungs-Nr. / Drawing-No.	970441		
Ventil-Nr. / Valve-No.	CV 8		
Prüfspezifikation / Testing specification	WEKA AG, CH-8344 Bäretswil	Rev. Nr. / No.	O

Prüfung / Testing

[X] Schweissnaht Nr. / Weld No. Alle / All Verfahren 1a, 2c	[X] O-Ring / O-ring Alle / All Verfahren 1a, 2c	[X] Ventil Sitz / Valve seat Δp = 20bar Verfahren 2d
[X] Sicherheitsabdichtung / Security seal Δp = 3bar Verfahren 2a	[ ] Stopfbüchse / packing	[ ]

Fehlerkriterien / Acceptance Standard

Schweissnähte, Sicherheitsabdichtung / Welding-Seams, Security seal	$Q \leq 1 \cdot 10^{-7}$ mbar l/sec
O-Ringe / O-Rings	$Q \leq 1 \cdot 10^{-6}$ mbar l/sec
Sitz / Seat	$Q \leq 1 \cdot 10^{-4}$ mbar l/sec

Prüfverfahren / Testing Procedure

1 Vakuum Methode (innen / aussen 0:1) vacuum method (inlet / outlet 0:1)	2 Ueberdruck Methode (innen / aussen >1:≤1) pressurized method (inlet / outlet >1:≤1)
[X] 1a Leck suchen (He sprühen) / leak search (He spray) Schweissnähte / Welding-Seams O-Ringe / O-Rings	[X] 2a Leck suchen (He schnüffeln) / leak search (He snifting) Sicherheitsabdichtung / Security seal
[ ] 1b integral Methode (örtlich mit Plastikhülle) integral method (local with plasticenvelope)	[ ] 2b integral Methode (örtlich mit Plastikhülle) integral method (local with plasticenvelope)
[ ] 1c integral Methode (mit Plastikhülle) integral method (with plasticenvelope)	[X] 2c integral Methode (mit Plastikhülle) integral method (with plasticenvelope) Schweissnähte / Welding-Seams Δp = 20bar O-Ringe / O-Rings Δp = 20bar
[ ]	[X] 2d integral Methode (Vacuum Kammer) integral method (vacuum chamber) Sitz / Seat

Befund / Assessment

Fehlerkriterien / Acceptance standard	[X] erfüllt / acceptable	[ ] nicht erfüllt / unacceptable
Prüfgerät / Testing apparatus Alcatel - ASM 180t	Kalibrierung / Calibration Test Leck / Test Leakage $1{,}4 \cdot 10^{-7}$ mbar l/sec	Datum: / Date: 21.7.97

Bemerkungen:
Remarks:

Prüfstelle / Inspection / Examination	Abnahme durch / Accepted by	Hersteller / Manufacturer
Name: T. Bärner Datum / Date: 21.7.97	Name: ..... Datum / Date:	**WEKA AG** Schürlistrasse 8 CH-8344 Bäretswil

WEKA AG, Schürlistr. 8, CH-8344 Bäretswil, Telefon 01/939 29 59, Fax 01/939 29 63

Protokoll / Record

HELIUM - DICHTHEITSPRÜFUNG
HELIUM - TIGHTNESS TEST

Seite / Page 1 von / of 1 Seiten / Pages

Kunde / Customer	Ansaldo Energia s. p. a., I-16125 Genova	Auftrags-No. / Fabrication-No.	C-132774
Kundenbestell-Nr. / Customer's order No.	BC 190548	Unterauftrag-Nr. / Position-No.	001
		Schritt-Nr. / Seqence-No.	--
Bezeichnung / Object	H-TEV DN10/PN25 D-man	Anzahl / Quantity	1
Zeichnungs-Nr. / Drawing-No.	970323		
Ventil-Nr. / Valve-No.	MV 1		
Prüfspezifikation / Testing specification	WEKA AG, CH-8344 Bäretswil	Rev. Nr. / No.	O

Prüfung / Testing

[X] Schweissnaht Nr. / Weld No. Alle / All Verfahren 1a, 2c	[X] O-Ring / O-ring Alle / All Verfahren 1a, 2c	[X] Ventil Sitz / Valve seat Δp = 20bar Verfahren 2d
[X] Sicherheitsabdichtung / Security seal Δp = 3bar Verfahren 2a	[ ] Stopfbüchse / packing	[ ]

Fehlerkriterien / Acceptance Standard

Schweissnähte, Sicherheitsabdichtung / Welding-Seams, Security seal	$Q \leq 1 \cdot 10^{-7}$ mbar l/sec
O-Ringe / O-Rings	$Q \leq 1 \cdot 10^{-6}$ mbar l/sec
Sitz / Seat	$Q \leq 1 \cdot 10^{-4}$ mbar l/sec

Prüfverfahren / Testing Procedure

1 Vakuum Methode (innen / aussen 0:1) vacuum method (inlet / outlet 0:1)	2 Ueberdruck Methode (innen / aussen >1:≤1) pressurized method (inlet / outlet >1:≤1)
[X] 1a Leck suchen (He sprühen) / leak search (He spray) Schweissnähte / Welding-Seams O-Ringe / O-Rings	[X] 2a Leck suchen (He schnüffeln) / leak search (He snifting) Sicherheitsabdichtung / Security seal
[ ] 1b integral Methode (örtlich mit Plastikhülle) integral method (local with plasticenvelope)	[ ] 2b integral Methode (örtlich mit Plastikhülle) integral method (local with plasticenvelope)
[ ] 1c integral Methode (mit Plastikhülle) integral method (with plasticenvelope)	[X] 2c integral Methode (mit Plastikhülle) integral method (with plasticenvelope) Schweissnähte / Welding-Seams Δp = 20bar O-Ringe / O-Rings Δp = 20bar
[ ]	[X] 2d integral Methode (Vacuum Kammer) integral method (vacuum chamber) Sitz / Seat

Befund / Assessment

Fehlerkriterien / Acceptance standard	[X] erfüllt / acceptable	[ ] nicht erfüllt / unacceptable
Prüfgerät / Testing apparatus Alcatel - ASM 180t	Kalibrierung / Calibration Test Leck / Test Leakage $1{,}4 \cdot 10^{-7}$ mbar l/sec	Datum: / Date: 21.7.97

Bemerkungen:
Remarks:

Prüfstelle / Inspection / Examination	Abnahme durch / Accepted by	Hersteller / Manufacturer
Name: G. Ke Datum / Date: 21.7.97	Name: ..... Datum / Date:	**WEKA AG** Schürlistrasse 8 CH-8344 Bäretswil

WEKA AG, Schürlistr. 8, CH-8344 Bäretswil, Telefon 01/939 29 59, Fax 01/939 29 63

Protokoll / Record

HELIUM - DICHTHEITSPRÜFUNG
HELIUM - TIGHTNESS TEST

Seite / Page 1 von / of 1 Seiten / Pages

Kunde / Customer	Ansaldo Energia s. p. a., I-16125 Genova	Auftrags-No. / Fabrication-No.	C-132775
Kundenbestell-Nr. / Customer's order No.	BC 190548	Unterauftrag-Nr. / Position-No.	001
		Schritt-Nr. / Seqence-No.	--
Bezeichnung / Object	P-TEV DN40/PN25 D-Po	Anzahl / Quantity	1
Zeichnungs-Nr. / Drawing-No.	970322		
Ventil-Nr. / Valve-No.	V 4		
Prüfspezifikation / Testing specification	WEKA AG, CH-8344 Bäretswil	Rev. Nr. / No.	O

Prüfung / Testing

[X] Schweissnaht Nr. / Weld No. Alle / All Verfahren 1a, 2c	[X] O-Ring / O-ring Alle / All Verfahren 1a, 2c	[X] Ventil Sitz / Valve seat Δp = 20bar Verfahren 2d
[X] Sicherheitsabdichtung / Security seal Δp = 3bar Verfahren 2a	[ ] Stopfbüchse / packing	[ ]

Fehlerkriterien / Acceptance Standard

Schweissnähte, Sicherheitsabdichtung / Welding-Seams, Security seal	$Q \leq 1 \cdot 10^{-7}$ mbar l/sec
O-Ringe / O-Rings	$Q \leq 1 \cdot 10^{-6}$ mbar l/sec
Sitz / Seat	$Q \leq 1 \cdot 10^{-4}$ mbar l/sec

Prüfverfahren / Testing Procedure

1 Vakuum Methode (innen / aussen 0:1) vacuum method (inlet / outlet 0:1)	2 Ueberdruck Methode (innen / aussen >1:≤1) pressurized method (inlet / outlet >1:≤1)
[X] 1a Leck suchen (He sprühen) / leak search (He spray) Schweissnähte / Welding-Seams O-Ringe / O-Rings	[X] 2a Leck suchen (He schnüffeln) / leak search (He snifting) Sicherheitsabdichtung / Security seal
[ ] 1b integral Methode (örtlich mit Plastikhülle) integral method (local with plasticenvelope)	[ ] 2b integral Methode (örtlich mit Plastikhülle) integral method (local with plasticenvelope)
[ ] 1c integral Methode (mit Plastikhülle) integral method (with plasticenvelope)	[X] 2c integral Methode (mit Plastikhülle) integral method (with plasticenvelope) Schweissnähte / Welding-Seams Δp = 20bar O-Ringe / O-Rings Δp = 20bar
[ ]	[X] 2d integral Methode (Vacuum Kammer) integral method (vacuum chamber) Sitz / Seat

Befund / Assessment

Fehlerkriterien / Acceptance standard: [X] erfüllt / acceptable [ ] nicht erfüllt / unacceptable

Prüfgerät / Testing apparatus Alcatel - ASM 180t	Kalibrierung / Calibration Test Leck / Test Leakage $1{,}4 \cdot 10^{-7}$ mbar l/sec	Datum: / Date: 2.7.97

Bemerkungen:
Remarks:

Prüfstelle / Inspection / Examination	Abnahme durch / Accepted by	Hersteller / Manufacturer
Name: T. Steiner Datum / Date: 2.7.97	Name: ..... Datum / Date:	**WEKA AG** Schürlistrasse 8 CH-8344 Bäretswil

WEKA ®
WEKA AG, Schürlistr. 8, CH-8344 Bäretswil, Telefon 01/939 29 59, Fax 01/939 29 63

Protokoll / Record

EINSTELLUNG FÜR REGELVENTIL
ADJUSTMENT OF CONTROL VALVE

Seite / Page 1 von / of 1 Seiten / Pages

Kunde / Customer	Ansaldo Energia s. p. a., I-16125 Genova	Auftrags-No. / Fabrication-No.	C-132769
Kundenbestell-Nr. / Customer's order No.	BC 190548	Unterauftrag-Nr. / Position-No.	001
Schritt-Nr. / Seqence-No.	--		
Bezeichnung / Object	P-WEV DN10/PN25 C-Po	Anzahl / Quantity	1
Zeichnungs-Nr. / Drawing-No.	970304		
Ventil-Nr. / Valve-No.	CV 1		

Ventileinstellung bei Ablieferung
Valve adjustment at delivery

		min	min Hub Stroke + 0.5	Zwischenwerte Intermediate values			max Hub Stroke - 0.5	max (+ 1 mm)	max Hub Stroke - 0.5	Zwischenwerte Intermediate values			min Hub Stroke + 0.5	min
W(mA)		4	4,4	8	12	16	19,1	20	19,1	16	12	8	4,5	4
Hub mm	SOLL	0	0.5	(2.5)	(5.0)	(7.5)	(9.5)	10	(9.5)	(7.5)	(5.0)	(2.5)	0.5	0
	IST	0	0,5	2,5	5	7,8	9,9	10,4	9,9	7,8	5,1	2,7	0,5	0
Feedback (mA)		4	4,4	7,9	11,9	16	19,1	20	19,1	16	11,9	7,9	4,7	4

Bemerkungen / Remarks

Stelldruck / Supply pressure: ....3..... bar (g)

Datum: 21.7.97

Sign.: N. Atti

Ventilnacheinstellung
Valve readjustment

		min	min Hub Stroke + 0.5	Zwischenwerte Intermediate values			max Hub Stroke - 0.5	max (+ 1 mm)	max Hub Stroke - 0.5	Zwischenwerte Intermediate values			min Hub Stroke + 0.5	min
W(mA)		4		8	12	16		20		16	12	8		4
Hub mm	SOLL	0	0.5	(2.5)	(5.0)	(7.5)	(9.5)	10	(9.5)	(7.5)	(5.0)	(2.5)	0.5	0
	IST													
Feedback (mA)														

Bemerkungen / Remarks

Stelldruck / Supply pressure: ..... bar (g)

Datum: .....

Sign.: .....

Ventilnacheinstellung
Valve readjustment

		min	min Hub Stroke + 0.5	Zwischenwerte Intermediate values			max Hub Stroke - 0.5	max (+ 1 mm)	max Hub Stroke - 0.5	Zwischenwerte Intermediate values			min Hub Stroke + 0.5	min
W(mA)		4		8	12	16		20		16	12	8		4
Hub mm	SOLL	0	0.5	(2.5)	(5.0)	(7.5)	(9.5)	10	(9.5)	(7.5)	(5.0)	(2.5)	0.5	0
	IST													
Feedback (mA)														

Bemerkungen / Remarks

Stelldruck / Supply pressure: ..... bar (g)

Datum: .....

Sign.: .....

WEKA ®
WEKA AG, Schürlistr. 8, CH-8344 Bäretswil, Telefon 01/939 29 59, Fax 01/939 29 63

Protokoll / Record

EINSTELLUNG FÜR REGELVENTIL
ADJUSTMENT OF CONTROL VALVE

Kunde / Customer	Ansaldo Energia s. p. a., I-16125 Genova	Auftrags-No. / Fabrication-No.	C-132770
Kundenbestell-Nr. / Customer's order No.	BC 190548	Unterauftrag-Nr. / Position-No.	001
Schritt-Nr. / Seqence-No.	--		
Bezeichnung / Object	P-TEV DN10/PN25 C-Ps	Anzahl / Quantity	1
Zeichnungs-Nr. / Drawing-No.	970314		
Ventil-Nr. / Valve-No.	CV 2		

Ventileinstellung bei Ablieferung
Valve adjustment at delivery

		min	min Hub Stroke + 0.5	Zwischenwerte Intermediate values			max Hub Stroke - 0.5	max (+ 1 mm)	max Hub Stroke - 0.5	Zwischenwerte Intermediate values			min Hub Stroke + 0.5	min
W(mA)		20	19,8	16	12	8	4,9	4	4,9	8	12	16	19,4	20
Hub mm	SOLL	0	0.5	(2.5)	(5.0)	(7.5)	(9.5)	10	(9.5)	(7.5)	(5.0)	(2.5)	0.5	0
	IST	0	0,5	2,65	5,4	8	10,2	10,7	10,2	8,3	5,4	2,7	0,5	0
Feedback (mA)		20	19,5	15,9	12	7,9	4,4	4,1	4,4	7,8	12	15,9	19,4	20

Bemerkungen / Remarks

Stelldruck / Supply pressure: 2,5 bar (g)

Datum: 18.7.97

Sign.: N. [illegible]

Ventilnacheinstellung
Valve readjustment

		min	min Hub Stroke + 0.5	Zwischenwerte Intermediate values			max Hub Stroke - 0.5	max (+ 1 mm)	max Hub Stroke - 0.5	Zwischenwerte Intermediate values			min Hub Stroke + 0.5	min
W(mA)		20		16	12	8		4		8	12	16		20
Hub mm	SOLL	0	0.5	(2.5)	(5.0)	(7.5)	(9.5)	10	(9.5)	(7.5)	(5.0)	(2.5)	0.5	0
	IST													
Feedback (mA)														

Bemerkungen / Remarks

Stelldruck / Supply pressure: ..... bar (g)

Datum: .....

Sign.: .....

Ventilnacheinstellung
Valve readjustment

		min	min Hub Stroke + 0.5	Zwischenwerte Intermediate values			max Hub Stroke - 0.5	max (+ 1 mm)	max Hub Stroke - 0.5	Zwischenwerte Intermediate values			min Hub Stroke + 0.5	min
W(mA)		20		16	12	8		4		8	12	16		20
Hub mm	SOLL	0	0.5	(2.5)	(5.0)	(7.5)	(9.5)	10	(9.5)	(7.5)	(5.0)	(2.5)	0.5	0
	IST													
Feedback (mA)														

Bemerkungen / Remarks

Stelldruck / Supply pressure: ..... bar (g)

Datum: .....

Sign.: .....

WEKA AG, Schürlistr. 8, CH-8344 Bäretswil, Telefon 01/939 29 59, Fax 01/939 29 63

Protokoll / Record

EINSTELLUNG FÜR REGELVENTIL
ADJUSTMENT OF CONTROL VALVE

Kunde / Customer	Ansaldo Energia s. p. a., I-16125 Genova	Auftrags-No. / Fabrication-No.	C-132771
Kundenbestell-Nr. / Customer's order No.	BC 190548	Unterauftrag-Nr. / Position-No.	001
Schritt-Nr. / Seqence-No.	--		
Bezeichnung / Object	P-TEV DN10/PN25 C-Po	Anzahl / Quantity	1
Zeichnungs-Nr. / Drawing-No.	970321		
Ventil-Nr. / Valve-No.	CV 3		

Ventileinstellung bei Ablieferung
Valve adjustment at delivery

		min	min Hub Stroke + 0.5	Zwischenwerte Intermediate values			max Hub Stroke - 0.5	max (+ 1 mm)	max Hub Stroke - 0.5	Zwischenwerte Intermediate values			min Hub Stroke + 0.5	min
W(mA)		4	4,5	8	12	16	19,1	20	19,1	16	12	8	4,5	4
Hub mm	SOLL	0	0.5	(2.5)	(5.0)	(7.5)	(9.5)	10	(9.5)	(7.5)	(5.0)	(2.5)	0.5	0
	IST	0	0,5	2,5	4,9	7,5	9,5	10	9,5	7,5	5,0	2,5	0,5	0
Feedback (mA)		4	4,4	8	11,8	16	19,2	19,9	19,2	16	12	7,8	4,4	4

Bemerkungen / Remarks

Stelldruck / Supply pressure: ....3..... bar (g)

Datum: 21.7.97

Sign.: T. [signature]

Ventilnacheinstellung
Valve readjustment

		min	min Hub Stroke + 0.5	Zwischenwerte Intermediate values			max Hub Stroke - 0.5	max (+ 1 mm)	max Hub Stroke - 0.5	Zwischenwerte Intermediate values			min Hub Stroke + 0.5	min
W(mA)		4		8	12	16		20		16	12	8		4
Hub mm	SOLL	0	0.5	(2.5)	(5.0)	(7.5)	(9.5)	10	(9.5)	(7.5)	(5.0)	(2.5)	0.5	0
	IST													
Feedback (mA)														

Bemerkungen / Remarks

Stelldruck / Supply pressure: ..... bar (g)

Datum: .....

Sign.: .....

Ventilnacheinstellung
Valve readjustment

		min	min Hub Stroke + 0.5	Zwischenwerte Intermediate values			max Hub Stroke - 0.5	max (+ 1 mm)	max Hub Stroke - 0.5	Zwischenwerte Intermediate values			min Hub Stroke + 0.5	min
W(mA)		4		8	12	16		20		16	12	8		4
Hub mm	SOLL	0	0.5	(2.5)	(5.0)	(7.5)	(9.5)	10	(9.5)	(7.5)	(5.0)	(2.5)	0.5	0
	IST													
Feedback (mA)														

Bemerkungen / Remarks

Stelldruck / Supply pressure: ..... bar (g)

Datum: .....

Sign.: .....

WEKA AG, Schürlistr. 8, CH-8344 Bäretswil, Telefon 01/939 29 59, Fax 01/939 29 63

Protokoll / Record

EINSTELLUNG FÜR REGELVENTIL
ADJUSTMENT OF CONTROL VALVE

Kunde / Customer	Ansaldo Energia s. p. a., I-16125 Genova	Auftrags-No. / Fabrication-No.	C-132772
Kundenbestell-Nr. / Customer's order No.	BC 190548	Unterauftrag-Nr. / Position-No.	001
		Schritt-Nr. / Seqence-No.	--
Bezeichnung / Object	P-TEV DN10/PN25 C-Ps	Anzahl / Quantity	1
Zeichnungs-Nr. / Drawing-No.	970314		
Ventil-Nr. / Valve-No.	CV 4		

Ventileinstellung bei Ablieferung
Valve adjustment at delivery

		min	min Hub Stroke + 0.5	Zwischenwerte Intermediate values			max Hub Stroke - 0.5	max (+ 1 mm)	max Hub Stroke - 0.5	Zwischenwerte Intermediate values			min Hub Stroke + 0.5	min
W(mA)		20	19,5	16	12	8	4,5	4	4,5	8	12	16	19,2	20
Hub	SOLL	0	0.5	(2.5)	(5.0)	(7.5)	(9.5)	10	(9.5)	(7.5)	(5.0)	(2.5)	0.5	0
mm	IST	0	0,5	2,7	5,2	7,7	9,9	10,4	9,9	7,7	5	2,7	0,5	0
Feedback (mA)		4	19,5	16	12	8	4,5	4	4,5	8	12,1	16	19,2	20

Bemerkungen / Remarks

Stelldruck / Supply pressure: 2,5 bar (g)

Datum: 23.7.97

Sign.: N. H.

Ventilnacheinstellung
Valve readjustment

		min	min Hub Stroke + 0.5	Zwischenwerte Intermediate values			max Hub Stroke - 0.5	max (+ 1 mm)	max Hub Stroke - 0.5	Zwischenwerte Intermediate values			min Hub Stroke + 0.5	min
W(mA)		20		16	12	8		4		8	12	16		20
Hub	SOLL	0	0.5	(2.5)	(5.0)	(7.5)	(9.5)	10	(9.5)	(7.5)	(5.0)	(2.5)	0.5	0
mm	IST													
Feedback (mA)														

Bemerkungen / Remarks

Stelldruck / Supply pressure: ..... bar (g)

Datum: .....

Sign.: .....

Ventilnacheinstellung
Valve readjustment

		min	min Hub Stroke + 0.5	Zwischenwerte Intermediate values			max Hub Stroke - 0.5	max (+ 1 mm)	max Hub Stroke - 0.5	Zwischenwerte Intermediate values			min Hub Stroke + 0.5	min
W(mA)		20		16	12	8		4		8	12	16		20
Hub	SOLL	0	0.5	(2.5)	(5.0)	(7.5)	(9.5)	10	(9.5)	(7.5)	(5.0)	(2.5)	0.5	0
mm	IST													
Feedback (mA)														

Bemerkungen / Remarks

Stelldruck / Supply pressure: ..... bar (g)

Datum: .....

Sign.: .....

WEKA AG, Schürlistr. 8, CH-8344 Bäretswil, Telefon 01/939 29 59, Fax 01/939 29 63

Protokoll / Record

EINSTELLUNG FÜR REGELVENTIL
ADJUSTMENT OF CONTROL VALVE

Kunde / Customer	Ansaldo Energia s. p. a., I-16125 Genova	Auftrags-No. / Fabrication-No.	C-132773
Kundenbestell-Nr. / Customer's order No.	BC 190548	Unterauftrag-Nr. / Position-No.	001
		Schritt-Nr. / Seqence-No.	--
Bezeichnung / Object	P-TEV DN15/PN25 C-Ps	Anzahl / Quantity	1
Zeichnungs-Nr. / Drawing-No.	970441		
Ventil-Nr. / Valve-No.	CV 8		

Ventileinstellung bei Ablieferung
Valve adjustment at delivery

		min	min Hub Stroke + 0.5	Zwischenwerte Intermediate values			max Hub Stroke - 0.5	max (+ 1 mm)	max Hub Stroke - 0.5	Zwischenwerte Intermediate values			min Hub Stroke + 0.5	min
W(mA)		20	19,5	16	12	8	4,6	4	4,6	8	12	16	19,5	20
Hub mm	SOLL	0	0.5	(2.5)	(5.0)	(7.5)	(9.5)	10	(9.5)	(7.5)	(5.0)	(2.5)	0.5	0
	IST	0	0,5	2,6	5,1	7,6	9,7	10,2	9,7	7,8	5,2	2,7	0,5	0
Feedback (mA)		20	19,5	15,9	11,9	8	4,6	4	4,6	8	11,9	15,8	19,5	20

Bemerkungen / Remarks

Stelldruck / Supply pressure: 3 bar (g)

Datum: 18.7.97

Sign.: T. Steiner

Ventilnacheinstellung
Valve readjustment

		min	min Hub Stroke + 0.5	Zwischenwerte Intermediate values			max Hub Stroke - 0.5	max (+ 1 mm)	max Hub Stroke - 0.5	Zwischenwerte Intermediate values			min Hub Stroke + 0.5	min
W(mA)		20		16	12	8		4		8	12	16		20
Hub mm	SOLL	0	0.5	(2.5)	(5.0)	(7.5)	(9.5)	10	(9.5)	(7.5)	(5.0)	(2.5)	0.5	0
	IST													
Feedback (mA)														

Bemerkungen / Remarks

Stelldruck / Supply pressure: ..... bar (g)

Datum: .....

Sign.: .....

Ventilnacheinstellung
Valve readjustment

		min	min Hub Stroke + 0.5	Zwischenwerte Intermediate values			max Hub Stroke - 0.5	max (+ 1 mm)	max Hub Stroke - 0.5	Zwischenwerte Intermediate values			min Hub Stroke + 0.5	min
W(mA)		20		16	12	8		4		8	12	16		20
Hub mm	SOLL	0	0.5	(2.5)	(5.0)	(7.5)	(9.5)	10	(9.5)	(7.5)	(5.0)	(2.5)	0.5	0
	IST													
Feedback (mA)														

Bemerkungen / Remarks

Stelldruck / Supply pressure: ..... bar (g)

Datum: .....

Sign.: .....

R. MULLER AG — HAMMERWERKE — CH-3048 WORBLAUFEN

Schmiede- und Gesenkschmiedestücke — Press- und Stanzarbeiten — Mech. Werkstätten
Telefon 031 58 04 57, Telegramm-Adresse: Hammerwerke Worblaufen

000656

WEKA AG.
Industrie-Armaturen
Hofstrasse 8

8620 Wetzikon

Abnahmeprüfzeugnis B **nach DIN 50049-3.1 B**
Inspection certificate
Certificat de contrôle des produits par l'usine

Werkszeugnis ~~nach DIN 50049-2.2~~
Report, based on quality control Certified
Relevé de contrôle Material Test Report

CH - 3048 Worblaufen 26.4.1983 Nr. N 3414 / / /

Bestellung Nr./vom / your Order-No / No de Commande/date	Unsere Auftrags-Nr. / our Order / notre No Ref.
708/0611 , 14.4.1983	N 3414

Werkstoff-Normbez. / Standard-Grade of Material / Matière	Werkstoff-Nr. / Material No / No de matière nach / in accordance with / selon	Lieferzustand / Condition of Delivery / Etat de livraison
SA 182 - F 304 L	1.4306	austenitic heating 1040°C quenching in water

Lieferbedingung und / oder Prüfanforderung
Terms of order and/or other requirements
Normes et/ou autres spécifications: SA 182 - F 304 L ASME Code Section II Part A, Winter 1980

Herstellerzeichen / Trade mark / Sigle du producteur: MW
Stempel des Werksachverständigen / Inspectors stamp / Poinçon de l'agent réceptionnaire: AM

Pos. Nr. Item No No de poste	Stückzahl Quantity Nombre	Gegenstand / Discription / Objet Gewicht / Weight / Poids	Zeichnungs-Nr. Drawing No No dessin	Schmelzen-Nr. Heat-No No de coulée	Probe-Nr. Test-No No d'essais
	5	bars Ø 45 x 620 mm long		19065	701
	3	do. Ø 50 x 510 mm			
	3	do. Ø 70 x 560 mm			
	5	do. Ø 80 x 540 mm			
	1	do. Ø 94 x1020 mm			
	3	do. Ø 105 x 890 mm			
		dispatch-weight: 482 kg			

We hereby certify that the contents of the report are correct and accurate and that all test results and operations performed are in compliance with the requirements of the applicable code section as designated by the purchase order.

Schmelzen-Nr. Heat-No No de coulée

Analyse / Chemical Composition / Composition chimique: accord. to Rap. Ugine Aciers Nr. 4449

Erschmelzungsart / Steelmaking Process / Procède d'élaboration: M = SM-Stahl / Open Hearth Steel / Acier Martin; Y = Oxygen-Stahl / Oxygen Steel / Acier à l'oxygen; E = Elektrostahl / Electric Steel / Acier électric

	% C	% Si	% Mn	% P	% S	% Cr	% Mo	% Ni	%	%	%	%
	.024	.346	1.219	.03	.007	18.15	.287	10.96		Check Analysis		
19065	0.023	0.34	1.20	0.028	0.002	18.50	-	11.07				

Mechanische Eigenschaften / Mechanical Properties / Propriété mécaniques

Probe-Nr. Test-No No d'essais	Prob.-Lage Pos. of Test Position	Pr.-Temp. T.-Temp. Température °C	ReH/Rp (N/mm²) 0,2 %	1 %	Rm (N/mm²)	(%) 2"	Z (%)	Av (J) /	ak (J/cm²)	Pr.-Form Type of Sp Type	Härte Hardness Dureté
Vorschrift: Requirem.: Spécificat.:			172		483	30					
701	längs	+20°C	221	257	536	62,0	80,0			ø 12,5	

Interkristalline Korrosion (DIN 50914) A 262
Intergranular Attak ASTM
Corrosion intercristalline
Pratice E: resistent

Besichtigung und Masskontrolle wurden durchgeführt
Surface and dimensions controlled
Inspection du matériel et contrôle des dimensions ont été effectuée: o.k.

Ultraschallprüfung
Ultrasonic Test
Contrôle ultrason

Bemerkungen
Remarks
Observation

2.5.1983
IWM
Industriestrasse 59
8152 Glattbrugg

QUALITAETSSTELLE R. Müller Hammerwerke
Q-Leiter
R. MÜLLER AG
Abnahme

Beilage :

Der Werksachverständige / Works-Inspector / Contrôleur Usine

aciers usine d'ugine F 73400 ugine

ABNAHMEPRÜFZEUGNIS B nach DIN 50049 - 3. 1B
CERTIFICAT D'ESSAIS : suivant DIN 50049 - 3. 1B
INSPECTION CERTIFICATE : according to DIN 50049 - 3. 1B

Prüf.-Nr. : 4449

Ausgestellt im Einvernehmen mit dem TÜV Baden e.V. Zulassungsschreiben vom 7.3.1972
Fait en accord avec le TÜV Baden par lettre du 7.3.1972
Issued in agreement of TÜV Baden by letter 7.3.1972

IMP NOUVELLE CARLES UGINE

Besteller : MULLER Forges CH-3048 WORBLAUFEN
Acheteur
Purchaser

Bestellnr. : VERBALE 18.08.82-ADL3287
N° de commande
Order n°

Hersteller : Usine d'Ugine
Fabricant
Manufacturer

Werksnr. : 705D28/01BZ
N° d'usine
Works order n°

Prüfgegenstand : Halbzeug Gewalzt Abgeschreckt
Objet de l'examen
Product

Anforderungen : Druckbehälterverordnung / AD-Merkblatt W 2
Exigences
Terms of delivery

Werkstoff (Normbezeichnung) : WNR 4306 X 2 CrNi 18 9 entsprechend : DIN 17440 Ausgabe Dez. 1972
Nuance (désignation normalisée) suivant
Grade (standard designation) according to

Kennzeichnung : / Herstellerzeichen / Werkstoffsorte / Schmelzennummer / Stempel des Werkssachverständigen
Marquage / Sigle du fabricant / Désignation du matériau / N° de coulée / Poinçon de l'Agent Réceptionnaire de l'Usine
Marking / Mark of the manufacturer / Grade / Heat n° / Work Inspector's stamp

Schmelzungsart (MEW) : E
Mode d'élaboration
Melting process

Zeichen des Herstellerwerkes :
Sigle du fournisseur
Mark of the Manufacturer

Werkenbezeichnung : NS22SV
Marque du fournisseur
Manufacturer's grade

Stempel des Werkssachverständigen :
Poinçon de l'Agent Réceptionnaire de l'Usine
Work Inspector's stamp

Pos.-Nr. / Item	Stückzahl / Nombre de pièces / Quantity	Masse / Poids kg / Weight	Abmessungen / Dimensions mm / Dimensions	Schmelzen-Nr. / N° de coulée / Heat n°	Probe-Nr. / N° de prélèvement / Test n°
01	4	2175	Bil. 120	19065	1

Chemische Zusammensetzung (Schmelzenanalyse)
Composition chimique (Analyse de classement)
Chemical Analysis (Ladle analysis)

Schmelzen-Nr. / N° de coulée / Heat n°		C	Si	Mn	Ni	Cr	Mo	Ti	S	P		
Vorschrift / Demandé / Requirements	mindestens / mini				10.00	17.00						
	höchstens / maxi	0.03	1.00	2.00	12.50	20.00			0.030	0.045		
19065		0.023	0.34	1.20	11.07	18.50			0.002	0.028		

Ergebnis der Prüfungen
Résultats des essais
Tests results

Ultraschallprufung = GUT

Der Werkstoff wurde auf Werkstoffverwechslung geprüft :
Contrôle de mélange fait
Mixing testing performed

Besichtigung und Ausmessung : GUT
Examen et mesure
Surface and tolerances

3. Kerbschlagversuch : GUT
Essai de résilience
Impact test

Zerreissversuch : GUT
Essai de traction
Tensile test

3. 1 Probenform : KCU
Eprouvette d'essai
Type of specimen

3. 2 Prüftemperatur : RT
Température d'essai
Test temperature

Das Material ist gemäss DIN 50914 beständig gegen interkristalline Korrosion GUT
Essai de corrosion selon DIN 50914 conforme
Resistance to intercrystalline corrosion according to DIN 50914

Besichtigung und Ausmessung ergaben keine Beanstandungen
Surfaces et tolérances conformes
Surfaces and tolerances: no remarks

Die gestellten Anforderungen sind erfüllt
Produits conformes aux prescriptions de la commande
The material complies with the terms of the order

Mechanische Eigenschaften
Caractéristiques mécaniques
Mechanical properties

W A 1100° C

Schmelzen-Nr. / N° de coulée / Heat n°		Probe-Nr. / N° de prélèvem. / Test n°	Probenlage / Position prélèvement / Pos. of sample	Härte / Dureté / Hardness H B	Streckgrenze / Limite élastique N/mm2 / Yield Strength 0,2 %	1 %	Zugfestigkeit / Résistance / Tensile Strengh N/mm²	Bruchdehnung / Allongement / Elongation (Lo = 5 do) %	Einschnürung / Striction / Red of area %	Kerbschlagzähigkeit / Résilience / Impact Strengh J
Vorschrift / Demandé / Requirements	mindestens / mini									
	höchstens / maxi									
19065		1	(L)	158	230	270	570	57		147

Datum : LE 27.10.82
Date

diese Bescheinigung gilt nicht als Werkstoff nachweis fuer fertige Teile.

ugine aciers usine d'ugine
Der Werkssachverständige G.MATHERN
L'Agent Réceptionnaire de l'Usine
The Work Inspector

Mathern

Laut Schreiben des TÜV Baden e.V. vom 12.9.77 wird auf die Gegenzeichnung verzichtet
Signation de contre-signature par le TÜV Baden supprimée par lettre du 12.9.77
Countersigning of TÜV Baden cancelled by letter 12.9.77

AST

ABNAHMEPRUEFZEUGNIS
EN 10204/3.1B DIN 50049/3.1B

BESTELLER	DATUM	ATTEST NR
SANDVIK AG	95-08-22	N515153
LIMMATSTRASSE 2 CH-8957 SPREITENBACH SCHWEIZ	HERSTELLER AUFTRAGS NR: 94-11611	POS: 1.0
	BESTELLER AUFTRAGS NR: BEST.NR 1687/1	

ERZEUGNISFORM
GESCHWEISSTE ROSTFREIE ROHRE, NAHTGEGLÄTTET, WÄRMEBEHANDELT, GEBEIZT, IN HERSTELLÄNGEN,

LIEFERBEDINGUNGEN	TOLERANZEN
DIN 17457 PK 1 V=1.0 BN 2, TEIL 2	DIN2463D4T3
	ZEICHEN DES HERSTELLER

WERKSTOFF	HERSTELLERBEZEICHNUNG	
W.NR 1.4435	17-13-2.5L	AST-N

ROHRKENNZEICHNUNG
W.NR 1.4435; K2G; W; PK 1;
MAR-N1,AST-N 17-13-2.5L ,TV160847, 17.2 X 1.6 ,

003711

UMFANG DER LIEFERUNG

ANZAHL	METER	KILO	ABMESSUNG	CHARGE NR
161	976.0		17.20 X 1.60	160847

CHEMISCHE ZUSAMMENSETZUNG

	C	Si	Mn	P	S	Cr	Ni	MO	TI	N
SCHMELZEANALYSE	.014	.44	1.64	.030	.001	17.18	12.69	2.58	.02	.054
KONTROLLANALYSE										

ERGEBNISSE DER PRÜFUNGEN

	TEMP C	Rp 0.2 N/mm²	Rp 1.0 N/mm²	Rm N/mm²	A 5 %	A %	HARTE		TEMP C	Rp 0.2 N/mm²	Rp 1.0 N/mm²	Rm N/mm²	A 5 %	A %	HARTE
ANFORDERUNGEN		190	225	490-690	40			ANFORDERUNGEN							
01L	20	283	321	574	52										

AUFWEITVERSUCH DIN 50135 : OHNE BEANSTANDUNG.
BESTÄNDIGKEIT GEGEN INTERKRISTALLINE KORROSION
DIN 50914 (700 C 30') : OHNE BEANSTANDUNG.
FERRITKONTROLLE SCHWEISSNAHT : 0.2%
WIRBELSTROMPRUEFUNG SEP 1914 : OHNE BEANSTANDUNG.
DICHTHEITSPRUEFUNG SEP 1925 : OHNE BEANSTANDUNG.
VERWECHSLUNGSPRUEFUNG : OHNE BEANSTANDUNG.

TÜV CERT
DIN ISO 9002
Zertifikat: QA - 446

ERSCHMELZUNGS-ART	BESICHTIGUNG UND AUSMESSUNG	STEMPEL DES WERK SACHVERSTÄNDIGEN	DIE GESTELLTEN ANFORDERUNGEN SIND LAUT ANLAGE ERFÜLLT
E / AOD	OHNE BEANSTANDUNG		QC-ABT BJÖRN ZETTERBERG 82117
WÄRMEBEHANDLUNG: 1040-1080 C LUFT UND WASSER			AUSGESTELLT VON YVONNE WANNESTRAND

AVESTA SANDVIK TUBE AB
TORSHÄLLA BOX 48 S-644 21 TORSHÄLLA SWEDEN
TELEPHONE NO +46 16 34 95 00
TELEPHONE QC-DEPT +46 16 34 95 80
TELEPHONE CERT DEPT +46 16 34 96 59
TELEFAX QC/CERT DEPT +46 16 34 97 00

Ugine-Savoie

FRANCE

N. Nr No 37522 | N. de commande usine-Werksbestellnummer-Works order number FUGE FUG2 1/1 7R841000 U

CERTIFICAT DE RECEPTION 3.1.B (CCPU)
ABNAHMEPRUEFZEUGNIS 3.1.B
INSPECTION CERTIFICATE 3.1.B

003386

EN 10204 / DIN 50049

5 Usine Productrice / Hersteller / Manufacturer: **UGINE** F 73403 UGINE CEDEX — Tél : 79.89.30.30 télex ugias 980 050

Produit / Erzeugnisform / Product: STAB GEWALZT ABGESCHRECKT ENTZUNDERT GERICHTET 6

Client: **Stahag**

Purchaser and/or Consignee 9 | N. de commande client - Kundebestellnummer - Purchaser order number: 94-5240L 10

Spécifications techniques - Stalsorte und Pruefbedingungen - Quality and Specifications

UGIMA 4435 DIN 17440 AD-W 2 WNR 1.4435
BASLER NORM BN2 12

Etat de livraison - Lieferzustand - As delivered (1): ABGESCHRECKT UND GERICHTET 13

Traitement de Référence - Probestreifenbehandlung - Treatment of test samples (1): 14

Identification du produit / Erzeugnis Benennung-Product identification: N. de cde usine / Werksbestellnummer / Works order number 15	N. de poste / Post Nr / Item No 17	N. de Coulée / Schmelz Nr / Heat No 16	Nombre / Stueckzahl / Pieces Nbr 18	Profil / Profile / Shape 19-20	Longueur / Laenge / Length 21	Masse / Gewicht / Weight 22
7R841	000	420038	39	RUND	28,000	1030 KG

N. de Prélèvement / Probenummer / Test N. 39 B	Demandé-Vorschrift-Required	Sens / Richtung / Direction (3) 24	Température d'essai / Pruefetemperatur / Test Temperature 25	Traction - Zugversuch - Tensile test: Limite d'Elasticité / Streckgrenze / Yield Strength 0,2 % 26 A	1 % 26 B	Résistance à la traction / Zugfestigkeit / Tensile strength 27	Allongement / Bruchdehnung / Elongation (L0=5do) 28	Striction / Einschnuerung / Red of Area 29	Dureté / Haerte / Hardness (4) 30	Résilience - Kerbschlagzaehigkeit - Notch Toughness: Type / Form / Type 31	Sens / Richtung / Direction (3) 32	Température d'essai / Pruefetemperatur / Test Temperature 33	Valeurs individuelles / Einzelwerte / Individual Values 35	Moyenne / Mittelwerte / Average 36	Dureté / Haerte / Hardness (5) 37
5607	Min	L	RT	N/MM2 190	N/MM2 225	N/MM2 490	% 35			ISOV	L	RT	J 85,0		
	Max					690									
	(4)														
	(5)			240	285	560	57						MIN = 160		
				240	285	560	57						MIT = 220		
													MAX = 280		

39 A N. de Prélèvement / Probenummer / Test N.	40 Demandé / Vorschrift / Required	41 Analyse/Produit-Stueck analyse-Check Analysis	42 C	43 SI	44 MN	45 NI	46 CR	47 MO	48 S	49 P	50 N
	Min					12,5	17,0	2,5			
	Max		0,03	1,0	2,0	15,0	18,5	3,0	0,025	0,045	
	N. de Coulée / Schmelz Nr / Heat N. 420038		0,02	0,3	1,5	12,6	17,1	2,5	0,023	0,024	0,038

38 Mode d'élaboration / Erchmelzungsart / Melting process	Demandé / Vorschrift / Required	51	52	53	54	55
Electrique / Elecktrisch / Electric	Min	TI				
	Max	0,0020				

% FERRITOSCOPE = 0
TUEV-ZULASSUNG NACH WO+TRD100 : ZUSTIMMUNG DES TUEV SUEDWEST LIEGT VOR
AUF GEGENZEICHNUNG WIRD VERZICHTET
INTERKRISTALLINE KORROSION BESTAENDIG NACH DIN 50914 / IDENTITAET GEPRUEFT

TUEV QUALIFICATION ACC. TO WO+TRD100 / AGREEMENT BY TUEV SUEDWEST.
INTERCRYSTALLINE CORROSION RESISTANT ACC. TO DIN 50914 / ANTIMIXING TESTED
==========

80118
10.7.95

29. JUNI 1995

50

(3) L = Long / Laengs - Long / T = Travers / Quer-Transverse 58

(1) TE = Trempé à l'eau - Wasserhaerten - Waterquench
TH = Trempé à l'huile - Olharten - Oil Quench
A = Hypertrempé - Losungsgeglueht - Solution annealed
R = Revenu - Anlassen - Tempered
RT = Recuit - Geglueht - Annealed
TRM = Recuit maxi - Welchgeglueht - Maxi annealed 7

Ugine, le 22-07-94
L'Agent Réceptionnaire de l'usine
Der Werkssachverstaendige
The Work Inspector
R6
D. Thivellier

(4) A l'état de référence / Zum Bezug Zustand / At reference condition 60 A

(5) A l'état de livraison / In Lieferzustand / In state of delivery 60 B

Controles de marquage, d'aspect et de dimensions: satisfaisants
Bezeichnung, Besichtigung und Ausmessung : ohne Beanstandung
Marking, inspection and measurement : without objection 62

Nous certifions que les produits énumérés ci-dessus sont conformes aux prescriptions de la commande
Wir bestatigen hiermit dass die obengenannten Erzeugnisse den Bestellungvorschriften entsprechen
We certify hereby that the above mentioned products are consistent with the order prescriptions 66

Calorstat

SENIOR FLEXONICS
DIVISION
CALORSTAT

CERTIFICAT DE RECEPTION 3.1.B suivant DIN 50049
ABNAHMEPRÜFZEUGNIS 3.1.B gem. DIN 50049 / EN 10204
MATERIAL CERTIFICATE 3.1.B Per DIN 50049

Certificat 2.2 [ ]
Werkszeugnis 2.2
Certificate 2.2

Certificat 2.3 [ ]
Werksprüfzeugnis 2.3
Certificate 2.3

003667

Commettant/Client:
Besteller
Customer
Weka

Bulletin de réception N°:
Prüf-Nr./In coming note Nr LoT 4199

Commande N°:
Bestell-Nr./Order Nr 42941

Producteur:
Hersteller/Manufacturer Rodney

Notre commande N°: 212/9899
Unsere Auftrag-Nr./Our order Nr OF 111287

Désignation des produits:
Gegenstand:
Product designation
Soufflet réf :SH 2802 689-0
Balg-ref/Bellows

Conditions de fourniture:
Prüfbedingungen/Supply conditions
Tube /*Rohr / Tube* :
Rouleau /*Band / Coil* : α
Planche/*Tafel / Sheet*:

Etat de livraison:
Lieferzustand/Condition of material
Recuit/*Geglüht / Annealed* :α
1/4 dur-*1/4hardt-1/4 hard*:

Matière (Norme):
Werkstoff (Normbez.) AISI 316L
Material grade

Marquage:
Kennzeichnung/Marking

Marque de qualité:
Werkbezeichnung
Quality identification

Poinçon de contrôle:
Stempel des Sachverständigen / Control stamp 4

N° Poste *Pos. Nr. Item Nr*	Nombre *Stückzahl Quantity*	Désignation *Gegenstand Designation*	Masse *kg Weight*	N° de coulée *Schmelzen Nr. Heat Nr*	N° d'essai *Probe Nr. Test Nr*
01	37	Soufflet/*Bälge/Bellows*		233266	

Procédé d'élaboration / *Erschmelzungsart /Manufacturing Process*
M :Acier Martin/*SM-Stahl/Martin Steel* F:Acier electr./*Elektrostahl/Electr. Steel*
Y :Acier à l'oxygène / *Oxygenstahl/Oxygen Steel*

81465

N° de coulée Schmelzen Nr. *Heat Nr*	**Composition chimique**/*Chemische Zusammensetzung in/Chemical composition %*										
	% C%	Si	% Mn	% P	% Cr	% S	% Mo	% Ni	% Cu	% Co	%
233266	.025	.51	1.60	.025	17.46	.004	2.61	12.68	.24	.14	

Résultats de contrôle :
Control results / Ergebnis der Prüfung conforme
Les exigences sont remplies selon annexe jointe
Die gestellten Anforderungen sind It. Anlage erfüllt
Requipement are fulfilled per attached annex

M. GRIGNE
NOM DE L'EMETTEUR ET
CACHET FOURNISSEUR

TELEDYNE RODNEY METALS
357 EAST RODNEY FRENCH BLVD. NEW BEDFORD, MASS. 02744-2
P.O. BOX 6915 NEW BEDFORD, MASS. 02742-0915
TEL. 508-996-5691 FAX # 508-993-3176

'EST CERTIFICATE NO. 28105

TELEDYNE ROD MTLS FRANC
Z I LES CHAUMES
18570 LA CHAPELLE
SAINT URSIN
FRANCE
99999-0000

C/O GEO VATINEL ET CIE
P B 186
76053 LE HAVRE
FRANCE
00000-0000

ESCRIPTION: 316L ANNEALED .01575 +.00079 -.00079 4F #4

CALORSTAT INDUSTRIES

PROD. NO. CODE PRODUIT PROD.-NR.	WIDTH LARGEUR BREITE	TOLERANCE TOLERANCE TOLERANZ	CUSTOMER PART NUMBER NUMERO DE PIECE CLIENT KUNDEN-TEIL-NR.	ORDERED QUANTITY QUANTITE COMMANDEE BESTELLMENGE	SHIPPED QUANTITY QUANTITE LIVREE VERSANDMENGE	NO. OF PIECES NOMBRE DE PIECES STÜCKZAHL DER COILS
009210	24.500	+.750 -.500	V/COM. : 42941		215,5 KG	4
	107,00 x 0,40 mm		N/REF. : UF 9841			

IL NUMBER DE COURONNE COIL-NR.	HEAT NUMBER NUMERO DE COULEE CHARGEN-NR.	SUPPLIER FOURNISSEUR LIEFERANT	METHOD OF MELT TYPE DE COULEE SCHMELZART	LOT NUMBER NUMERO DE LOT LOS-NR.	CUSTOMER SPECIFICATIONS SPECIFICATION CLIENT KUNDENSPEZIFIKATION
365	233266	WA	AOD		AMS 5507E

LOT 4199

CHEMISTRY ANALYSE CHEMISCHE ANALYSE

Inspection and dimensional records above verified by: _____

	C	MN	P	S	SI	CR	NI	CU	MO	CO
YSIS	.025	1.60	.025	.004	.51	17.46	12.68	.24	2.61	.14

********** M E C H A N I C A L P R O P E R T I E S **********

ITION --	HARDNESS --	D --	U.T.S. ---	.2% YS	%E in 2"	-BEND--	GRAIN SIZE----	EMB--	I.G.A.---	RA MICRO INCH
ALED	VHN-149		635.0 MPA	294.0 MPA	51.3		9.5	OK		

93-0203

CHEMICAL ANALYSIS IS TAKEN FROM THE RAW MATERIAL SUPPLIER'S TEST CERTIFICATE.

REVISION DATE 3/15/95.

LANCEMENT 27310

Client WeKa N° de Cde 212/9899
Of 111287 Réf. Client .....
Visa [signature] Réf. Calorstat Ind SH 2802 689-0

CONFORME A LA SPECIFICATION
CALORSTAT N° 20061 Ind. B

30-395 [signature]

The test information above shall not be reproduced, except in full, without written approval of T.R.M.

[signature] 03 15 95
AUTHORIZED SIGNATURE DATE

Edward L. Ursillo
DIR. QUALITY ASSURANCE

ISO 9002 TUV CERT
Certificate Registration No.272

Les resultats d'essa le materiel decrit ci-dessus sont veri es et sinceres. Ils

Die obenstehenden Daten si ach bestem Wissen und Gewissen korrek mittelt und basieren auf Testergebnissen von

Ugine-Savoie

FRANCE 520-18

5 Usine Productrice / Hersteller / Manufacturer

UGINE

F 73403 UGINE CEDEX — Tél : 79.89.30.30 — Télex ugine 980 050

4 N. Nr No 81807

11 N. de commande usine-Werksbestellnummer-Works order number: FUGE FUGA 1/1 5U261000 B

3

CERTIFICAT DE RECEPTION 3.1.B (CCPU)
ABNAHMEPRUEFZEUGNIS 3.1.B
INSPECTION CERTIFICATE 3.1.B

003537

EN 10204 / DIN 50049

Produit / Erzeugnisform / Product: STAB GEWALZT ABGESCHRECKT ENTZUNDERT GERICHTET 6

Stahag

Purchaser and/or Consignee 9

N. de commande client - Kundebestellnummer - Purchaser order number: 95-2004 L 10

Spécifications techniques - Stahlsorte und Pruefbedingungen - Quality and Specifications

UGIMA 4435 AD-W 2 WNR 1.4435

DIN 17440 WNR 1.4435/BASLER NORM BN2 12

Etat de livraison - Lieferzustand - As delivered (1): ABGESCHRECKT UND GERICHTET 13

Traitement de Référence - Probestreifenbehandlung - Treatment of test samples (1): 14

Identification du produit / Erzeugnis Benennung-Product Identification: N. de cde usine / Werksbestellnummer / Works order number 15	N. de poste / Post Nr / Item No 17	N. de Coulée / Schmelz Nr / Heat No 16	Nombre / Stueckzahl / Pieces Nbr 18	Profil / Profile / Shape 19-20	Longueur / Laenge / Length 21	Masse / Gewicht / Weight 22
5U261	000	515030	50	RUND	32,000	1800 KG

Prélèvement / Probenummer / Test N. 39 B	Demande-Vorschrift-Required (3) 24	Sens / Richtung / Direction 25	Température d'essai / Prueftemperatur / Test Temperature	Traction - Zugversuch - Tensile test: Limite d'Elasticité / Streckgrenze / Yield Strength 0,2 % 26 A	1 % 26 B	Résistance à la traction / Zugfestigkeit / Tensile strength 27	Allongement / Bruchdehnung / Elongation (L0 = 5d0) 28	Striction / Einschnuerung / Red of Area 29	Dureté / Haerte / Hardness (4) 30	Résilience - Kerbschlagzaehigkeit - Notch Toughness: Type / Form / Type 31	Sens / Richtung / Direction (3) 32	Température d'essai / Prueftemperatur / Test Temperature 33	Valeurs individuelles / Einzelwerte / Individual Values 35	Moyenne / Mittelwerte / Average 36	Dureté / Haerte / Hardness (5) 37
				N/MM2	N/MM2	N/MM2	%						J		
0140	Min	L	RT	190	225	490	35			ISOV	L	RT	85,0		
	Max					690									
	(4)														
	(5)			260	290	545	57						MIN = 160		
				255	285	540	57						MIT = 220		
				255	290	545	55						MAX = 280		
				255	290	540	55								

Prélèvement / Probenummer / Test N. 39 A	Demande Vorschrift Required 40	Analyse/Produit-Stueck analyse-Check Analysis 41	C 42	SI 43	MN 44	NI 45	CR 46	MO 47	N 48	TI 49	S 50
	Min					12,5	17,0	2,5			
	Max		0,03	1,0	2,0	14,0	18,0	3,0	0,100	0,0500	0,025
	N. de Coulée / Schmelz Nr / Heat N. 515030		0,02	0,2	1,5	12,6	17,0	2,5	0,032	0,0001	0,019

Mode d'élaboration / Erschmelzungsart / Melting process 38	Demande Vorschrift Required 51	52	53	54	55
Electrique / Elektrisch / Electric	Min: P				
	Max: 0,045				
	0,025				

% FERRITOSCOPE = 0,02
TUEV-ZULASSUNG NACH WO+TRD100 : ZUSTIMMUNG DES TUEV SUEDWEST LIEGT VOR
AUF GEGENZEICHNUNG WIRD VERZICHTET
INTERKRISTALLINE KORROSION BESTAENDIG NACH DIN 50914 9.1/IDENTIT. GEPRUEFT
INNERE FEHLERFREIHEIT DURCH PROZESS-KONTROLLE GARANTIERT
TUEV QUALIFICATION ACC. TO WO+TRD100 / AGREEMENT BY TUEV SUEDWEST.
INTERCRYSTAL. CORROSION RESISTANT ACC. TO EURONORM 114 / ANTIMIXING TESTED
FREEDOM FROM INTERNAL DEFECT GUARANTEED BY CONTROL PROCESS

26. JULI 1995 80123 56

L = Long / Laenge / Length / Lavers; Q = Quer / Transverse

(1) TE = Trempé à l'eau - Wasserhaerten - Waterquench
TH = Trempé à l'huile - Oelhaerten - Oil Quench
A = Hypertrempé - Losungsgegluht - Solution annealed
R = Revenu - Anlassen - Tempered
RT = Recuit - Geglueht - Annealed
TRM = Recuit maxi - Weichgegluht - Maxi annealed 7

(2) A l'état de référence / Zum Betrug Zustand / At reference condition 50 B

(3) A l'état de livraison / In Lieferzustand / In state of delivery

Controles de marquage, d'aspect et de dimensions: satisfaisants
Bezeichnung, Besichtigung und Ausmessung : ohne Beanstandung
Marking, inspection and measurement : without objection 62

Nous certifions que les produits énumérés ci-dessus sont conformes aux prescriptions de la commande
Wir bestatigen hiermit dass die obengenannten Erzeugnisse den Bestellungvorschriften entsprechen
We certify hereby that the above mentioned products are consistent with the order prescriptions 68

Ugine, le 31-05-95
L'Agent Réceptionnaire de l'usine
Der Werksachverstaendige
The Work Inspector
R6
D. Thivellier

Ugine-Savoie

FRANCE

5 Usine Productrice / Hersteller / Manufacturer: **UGINE**
F 73403 UGINE CEDEX — Tél : 04.79.89.30.30 — télex uglas 980 050

N. Nr No 68213 — N. de commande usine-Werksbestellnummer-Works order number: FUGE FUGA 1/1 3Z361000 B

3

CERTIFICAT DE RECEPTION 3.1.B (CCPU)
ABNAHMEPRUEFZEUGNIS 3.1.B
INSPECTION CERTIFICATE 3.1.B

EN 10204 / DIN 50049 3887

Produit / Erzeugnisform / Product: STAB GEWALZT ABGESCHRECKT ENTZUNDERT GERICHTET 6

Client et/ou destinataire - Besteller und/oder Empfaenger - Purchaser and/or Consignee: STAHAG 9

N. de commande client - Kundebestellnummer - Purchaser order number: 97-0929 10

Nuance et spécifications techniques - Stalsorte und Pruefbedingungen - Quality and Specifications 12

UGIMA 4435 AD-W 2 WNR 1.4435
DIN 17440 WNR 1.4435/BASLER NORM BN2

Etat de livraison - Lieferzustand - As delivered (1): ABGESCHRECKT UND GERICHTET 13

Traitement de référence - Probestreifenbehandlung - Treatment of test samples (1): 14

Identification du produit / Erzeugnis Benennung-Product Identification: N. de cde usine / Werksbestellnummer / Works order number (15)	N. de poste / Post Nr / item No (17)	N. de Coulée / Schmelz Nr / Heat No (16)	Nombre / Stueckzahl / Pieces Nbr (18)	Profil / Profile / Shape (19-20)	Longueur / Laenge / Length (21)	Masse / Gewicht / Weight (22)
3Z361	000	651026	8	RUND	90,000	1852 KG

N. de Prélèvement / Probenummer / Test N. (39 B)		Demandé-Vorschrift-Required Sens / Richtung / Direction (3) (24)	Température d'essai / Pruefetemperatur / Test Temperature (25)	Traction - Zugversuch - Tensile test: Limite d'Elasticité / Streckgrenze / Yield Strength 0,2 % (26 A)	1 % (26 B)	Résistance à la traction / Zugfestigkeit / Tensile strength (27)	Allongement / Bruchdehnung / Elongation (L0=5do) (28)	Striction / Einschnuerung / Red of Area (29)	Dureté / Haerte / Hardness (4) (30)	Résilience - Kerbschlagzaehigkeit - Notch Toughness: Type / Form / Type (31)	Sens / Richtung / Direction (3) (32)	Température d'essai / Pruefetemperatur / Test Temperature (33)	Valeurs individuelles / Einzelwerte / Individual Values (35)	Moyenne / Mittelwerte / Average (36)	Dureté / Haerte / Hardness (5) (37)
				N/MM2	N/MM2	N/MM2	%						J		
	Min	L	RT	190	225	490	35			ISOV	L	RT	85,0		
	Max					690									
0160															
	(4)														
	(5)			245	290	530	61						240-240-247		
				240	280	530	62						260-250-253		
				225	270	520	61						250-245-242		
				250	290	530	61						260-245-258		

N. de Prélèvement / Probenummer / Test N. (39 A)		Demandé / Vorschrift / Required (40)	Analyse/Produit-Stueck-analyse-Check Analysis (41)	C (42)	SI (43)	MN (44)	NI (45)	CR (46)	MO (47)	N (48)	TI (49)	S (50)
		Min					12,5	17,0	2,5			
		Max		0,03	1,0	2,0	14,0	18,0	3,0	0,100	0,0500	0,025
		N. de Coulée / Schmelz Nr / Heat N. 651026		0,02	0,3	1,5	12,6	17,0	2,5	0,035	0,0020	0,020

38 Mode d'élaboration / Erchmelzungsart / Melting process	Demandé / Vorschrift-Required	51	52	53	54	55
	Min	P				
Electrique / Elecktrisch / Electric	Max	0,045				
		0,031				

% FERRITOSCOPE = 0,02
ADWO + TRD100 : ZUSTIMMUNGSSCHREIBEN DES TUEV SUEDWEST LIEGT VOR
AUF GEGENZEICHNUNG WIRD VERZICHTET .
INTERKRISTALLINE KORROSION BESTAENDIG NACH DIN 50914 § 9.1/IDENTIT. GEPRUEFT
INNERE FEHLERFREIHEIT DURCH PROZESS-KONTROLLE GARANTIERT
ADWO + TRD100 : APPROVAL BY TUEV SUEDWEST
INTERCRYSTAL. CORROSION RESISTANT ACC. TO EURONORM 114 / ANTIMIXING TESTED
FREEDOM FROM INTERNAL DEFECT GUARANTEED BY CONTROL PROCESS

80150 56

(3) L = Long / Laengs - Long / T = Travers / Quer-Transverse 58

(1) TE = Trempé à l'eau - Wasserhaerten - Waterquench
TH = Trempé à l'huile - Olharten - Oil Quench
A = Hypertrempé - Losungsgegluehht - Solution annealed
R = Revenu - Anlassen - Tempered
RT = Recuit - Gegluehht - Annealed
TRM = Recuit maxi - Weichgegluehht - Maxi annealed 7

(4) A l'état de référence / Zum Bezug Zustand / At reference condition 60 A

(5) A l'état de livraison / In Lieferzustand / In state of delivery 60 B

Controles de marquage, d'aspect et de dimensions: satisfaisants
Bezeichnung, Besichtigung und Ausmessung : ohne Beanstandung
Marking, Inspection and measurement : without objection 62

Nous certifions que les produits énumérés ci-dessus sont conformes aux prescriptions de la commande
Wir bestatigen hiermit dass die obengenannten Erzeugnisse den Bestellungvorschriften entsprechen
We certify hereby that the above mentioned products are consistent with the order prescriptions 66

Ugine, le 04-03-97
L'Agent Réceptionnaire de l'usine
Der Werkssachverstaendige
The Work Inspector
C. Bioteau 63

0419 - 1141 IMP NOUVELLE CALLE 74400 UGINE

FINE TUBES LIMITED

PLYMBRIDGE ROAD, ESTOVER, PLYMOUTH PL6 7LG
Telephone: Plymouth (0752) 735851
Fax (0752) 733301

Serial No. C008228 Date 07/05/93

M.O.D. D.C.L. REGISTRATION No. 138 FO 1

ISSUED UNDER C.A.A. APPROVAL REF.No. AI/5813/59

Customer's Order Number	Customer 0434	Works Order Number
931249	BRUNO DOCKWEILER GMBH & CO KG MEESSEN 10 2000 OSTSTEINBEK GERMANY	T136445*1 003237
Our Reference Number		Cast/Heat Number
136445		468582
Finished Specification	**Quantity**	**Customer Part/Drawing**
DIN 17458 T.C.1 NON STD	498.710 Metres 91 Pieces	
Material Designation	**Dimensions**	**Temper**
1.4404/316L SEAMLESS	18.00mmODxx1.00mmWALL	B/ANNEALED 180HV MAX.

	C	Mn	P	S	Si	Ni	Cr	Mo	Ti	Nb	Al	Co	Cu	N	Fe
T	0.010	1.51	0.020	0.007	0.42	11.22	16.77	2.03	0.005			0.076	0.24	0.063	
B															

Melter : SANDVIK Extruder : STERLING

Tensile Strength (RM)	0.2% Proof Stress (Rp = 0.2)	% Elongation (2'')	Hardness (HV)
MPa	MPa	%	HV/5
609	284	52	174-175
608	284	52	
	1% Proof Stress	Elongation (√5.65)	
	311	54	
	309	54	

The following tests have been performed in accordance with the specification:

Intercrystalline Corrosion	Satisfactory
Flattening	7 mm
Flaring Test	Satisfactory
Material Verification	Satisfactory
Eddy Current Test	Satisfactory

Additional Information

This Material meets the Chemical and Mechanical Property Requirements of ASTM A269/A213.

Annealed 1050°C

Electric melted

83218

FM 09729
QAS 3640/65

Certified that, unless otherwise stated above, the whole of the Materials detailed hereon have been Manufactured, Tested and Inspected in accordance with the terms of the Contract/Order applicable thereto and fully conform in all respects to the standard Specifications and:

EN 10204.3.1.B / DIN 50049.3.1.B

For and on behalf of

FINE TUBES LTD. .....

Authorised Quality Assurance Signatory

SENIOR FLEXONICS
DIVISION
CALORSTAT

CERTIFICAT DE RECEPTION 3.1.B suivant DIN 50049
ABNAHMEPRÜFZEUGNIS 3.1.B gem. DIN 50049 / EN 10204
MATERIAL CERTIFICATE 3.1.B Per DIN 50049

Certificat 2.2 [ ]
Werkszeugnis 2.2
Certificate 2.2

Certificat 2.3 [ ]
Werksprüfzeugnis 2.3
Certificate 2.3

003813

Commettant/Client:
Besteller
Customer
Weka.

Bulletin de réception N°:
Prüf-Nr./In coming note Nr LOT 4444

Commande N°:
Bestell-Nr./Order Nr 44648

Producteur:
Hersteller/Manufacturer A R.S

Notre commande N°: 212 / 9899
Unsere Auftrag-Nr./Our order Nr OF 111287

Désignation des produits:
Gegenstand:
Product designation
Soufflet réf SH2802.689-0
Balg-ref/Bellows

Conditions de fourniture:
Prüfbedingungen/Supply conditions
Tube /*Rohr / Tube* :
Rouleau /*Band / Coil* :α
Planche/*Tafel / Sheet*:

Etat de livraison:
Lieferzustand/Condition of material
Recuit/*Geglüht / Annealed* :α
1/4 dur-*1 / 4hardt-1 / 4 hard*:

Matière (Norme):
Werkstoff (Normbez.) AISI 316L
Material grade

Marque de qualité:
Werkbezeichnung
Quality identification

Marquage:
Kennzeichnung/Marking

Poinçon de contrôle:
Stempel des Sachverständigen / Control stamp

N° Poste *Pos. Nr. Item Nr*	Nombre *Stückzahl Quantity*	Désignation *Gegenstand Designation*	Masse *kg Weight*	N° de coulée *Schmelzen Nr. Heat Nr*	N° d'essai *Probe Nr. Test Nr*
02	63	Soufflet/*Bälge/Bellows*		DK47	

Procédé d'élaboration / *Erschmelzungsart /Manufacturing Process*
M :Acier Martin/*SM-Stahl/Martin Steel* F:Acier electr./*Elektrostahl/Electr. Steel*
Y :Acier à l'oxygène / *Oxygenstahl/Oxygen Steel*

N° de coulée Schmelzen Nr. *Heat Nr*	Composition chimique/*Chemische Zusammensetzung in/Chemical composition %*										
	% C%	Si	% Mn	% P	% Cr	% S	% Mo	% Ni	%	%	%
DK.47	0.0130	0.380	1.320	0.027	17.210	0.0100	2.130	11.310			

Résultats de contrôle :
Control results / Ergebnis der Prüfung conforme
Les exigences sont remplies selon annexe jointe
Die gestellten Anforderungen sind It. Anlage erfüllt
Requipement are fulfilled per attached annex

81465

NOM DE L'EMETTEUR ET
CACHET FOURNISSEUR
Quigne

Atelier Refendage Service
Z.I. de Châtillon le Duc - B.P. 3008
25045 BESANÇON Cedex
Tél.: 81 48 13 00
Télex: 361 887
Fax: 81 58 77 00

911310

LIEU DE LIVRAISON

ADRESSE DE FACTURATION

STE CALORSTAT INDUSTRIE

ZI LA GAUDREE BP 58
91416 DOURDAN CEDEX

LOT 4444

CERTIFICAT DE CONFORMITE N°: 10584 DU 4/01/96
SELON LA NORME : 0000000000

NUMERO DE BOBINE : 6322

VOS REFERENCES : CDE N° 44648 AVENANT 1

POIDS LIVRE : 516,00 KG

BORDEREAU LIVR. N° : 10584

DESIGNATION PRODUIT : INOX 316L /Z3CND17-12-02 RECUIT

ETAT DE SURFACE : 2RB (RECUIT BRILLANT)

NUMERO DE COULEE : DK47

DIMENSIONS : 107,00 MM X 0,400 MM

LIMITE ELASTIQUE : 308

RM N/MM² : 605

ALLONGEMENT : 52,0
TYPE D'ALLONGEMENT : 0000
DURETE : 150 HV

COMPOSITION CHIMIQUE: C 0,0130 CR 17,2100 MN 1,3200 MO 2,1300
NI 11,3100 P 0,0270 S 0,0100 SI 0,3800

Client Weka N° de Cde 212/9899
Of 111287 Réf. Client
Visa Guigne Réf. Calorstat Ind SH 28226 89

LA DIRECTION

CONFORME A LA SPECIFICATION
CALORSTAT N° 2067 Ind. B

9 1 96
Guigne

LANCEMENT 28289

10 SUMITOMO METAL INDUSTRIES,L
STEEL TUBE WORKS
1. Nishino-cho. Higashi-mukojima Amagasaki, Japan

002046

meprüfzeugnis
ection Certificate

gem. DIN 50049 Bescheinigung über Werkstoffe-3.1B)
Mit Zustimmung des TÜV Rheinland e.V. -WE 373F vom 15.5.1980

Zeugnis-Nr.-Certificate No: YYE 7559

Der TÜV Rheinland hat mit Schreiben vom 04.12.1987,
WE 373 F auf die Gegenzeichnung verzichtet.

[redacted]

Bestell-Nr.-Order No:
KS322/89

Prüfgegenstand - Article: NAHTLOSE ROHRE AUS NICHTROSTENDEM STAHL
SEAMLESS STAINLESS STEEL TUBE (COLD DRAWN)

Prüfgrundlagen - Specification: AD-MERKBLATT W2/1987 DIN2462/2464 D3/T3

Werkstoff - Material: X 2 CRNIMO 18 14 3
entsprechend - according to: DIN17458 (PRUEFKLASSE 2)
Ausgabe - Edition: 1985

Erschmelzungsart - Melting process: E

Wärmebehandlung - Heat Treatment:
1050°C MIT WASSER ABGESCHRECKT -W.Q.

Ausführungsart-Delivery condition: H

Kennzeichnung - Marking

Werkstoff - Material:
1.4435
TEST CLASS 2, S, H
UT GOOD, TUBE NO.

Herstellerzeichen - Brand of the manufacturer:

Stempel des Werkssachverständigen: QA
-Stamp of Works Inspector

Umfang der Lieferung —Extent of material delivery

Pos.-Nr. Item No.	Werks-Nr. Work No.	A.D. O.D. (mm)	W.D. W.T. (mm)	Länge - Length (mm)	Stückzahl No. of pcs.	Gesamte Länge Total Length (m)	Gewicht Weight (kg)
	YYE 7559	21.30	2.00	5000-7000	92	497.30	473

Werks-Nr. Work No.	Schmelze-Nr. Heat No.	Los-Nr. Lot No.	Probe-Nr. T.P. No.	Rohr-Nr. - Piece No.
YYE 7559	A792302	1	1/1	1/1 - 1/92

Die gestellten Anforderungen sind lt. Anlagen erfüllt.
- The requirements are fulfilled as per Annex.

Anlage: Ergebnis der Prüfungen
-Annex: Test results

Datum - Date
24.APR.1989

Der Werkssachverständige
Works Inspector

K. Hirata

Anlage- Annex
Blatt-Nr.-Sheet No.: 1

SUMITOMO METAL INDUSTRIES, LT
STEEL TUBE WORKS

Ergebnis der Prüfungen
Test results

Zeugnis-Nr.-Certificate No. YYE 7559

1 Chemische Zusammensetzung - Chemical Composition (%)

Schmelze-Nr. Heat No.		※1	C	Si	Mn	P	S	Cu	Ni	Cr	Mo			
	min		-	-	-	-	-		125	170	25			
	max		030	10	20	045	025		150	185	30			
A792302		L	021	34	121	030	001		131	176	52	58		

※1 L=Schmelzanalyse - Ladle P=Stückanalyse-Product

2 Beizscheibenprüf
- Billet Macro Te
-

3 Zug (bei Rt) und Kerbschlagbiegeversuch - Tensile (at R.T.) and Impact Test

Probe-Nr. T.P. No.		※2	Probenabmessung Dimension of T.P. (mm) Dicke Thickness	Breite ø Width ø	※3 0.2 N/mm²	Rp 1.0 1%P.S. N/mm²	Rm T.S. N/mm²	A-EL. L₀=A ※4 %	※2	※5	Kerbschlagwerte-Impact Values Probenform-Type of Specimen: bei-at ℃ 1	2	3		Bemerkung Remarks
	min				190	225	490	40							
	max				-	-	690	-							
1/1		L	2.02	21.32	329	368	629	45							

Bemerkungungen -Remarks
※2 Richtung-Direction L=Längs-Longi. T=Quer-Trans.
※3 0.2=Rp0.2-0.2%P.S. ST=ReH-upper Y.P.
※4 Messlänge-G.L. A=5.65√So C= mm B=4√So
※5 Einheit-Unit J=Joule G=Joule/cm²

4 Masskontrolle und Besichtigung-Visual Inspection and Dimensional Check: O.B.
O.B. =Ohne Beanstand -Without Object
5 Verwechselungsprüfung-Material Identification: O.B.
6 Wasserdruck prüfung-Hydrostatic Test: O.B. (Prüfdruck-Test Pressure: 80BAR
7 Ultraschallprüfung-Ultrasonic Inspection: O.B. (100 % nach-as per SEP1915
8 Wirbelstromprüfung-Eddy Current Inspection: - (% nach-as per
9 Korrosionsprüfung-Corrosion Test: O.B. (Nach-as per DIN50914
10 Technologische Prüfung-Technological Test: O.B.
Prüfverfahren-Test Method: 1
1 Ringaufdorn Versuch-Ring Expansion
2 Ringfalt Versuch-Ring Flattening
3 Ringzug Versuch-Ring Tensile

Der Werkssachverständige
Works Inspector

Ort-Location
Amagasaki, Japan

Datum-Date
24.APR.1989

13.07.93 1456

KRUPP HOESCH STAHL

Abnahmeprüfzeugnis nach Inspection certificate according to Certificat de réception selon	DIN 50049- 3.1B EN 10204	Prüf-Nr. 464977

Krupp Hoesch Stahl AG, 57069 Siegen

Sandvik

THYSSEN EDELSTAHL AG

CH-9500 WIL

Besteller Purchaser Commettant	THYSSEN EDELSTAHL AG
Bestell-Nr. Order No Commande No	19639 SI
Hersteller Manufacturer Producteur	KRUPP STAHL AG
Uns. Auftr.-Nr. Our Order No Notre Com. No	742019
Anforderungen Requirements Prescriptions de contrôle	DIN 17 440 AD-W2 BASLER NORM 2 TEIL 2

Erzeugnisform / Product / Produit: STABSTAHL ABGESCHRECKT geschält

003454

Werkstoff / Quality / Nuance: 1.4435 X 2 CRNIMO 18 14 3
NIROSTA 4435

Erschmelzungsart / Melting furnace / Mode de fusion: E

Pos. / Item / Poste	Anzahl / Quantity / Nombre	Gewicht kg / Weight kg / Masse	Abmessung / Dimensions / Dimensions mm	Schmelzen-Nr. / Cast No / Coulée No	Probe-Nr. / Test No / Eprouv. No	Los-Nr. / Lot No / Lot No	Maße / Oberfläche / Dimensions / Surface / Dimensions / Surface
0100			038,00 RD	108928	64977		Keine Beanstandung Without objection Satisfaisants

Stempel d. Werksachverst. / Inspector's stamp / Poincon de l'expert: WA

Schmelzen-Nr. / Cast No / Coulée No	% C	% Si	% Mn	% P	% S	% Cr	% Mo	% Ni	TI	N
108928	0,010	0,72	01,14	,022	,025	17,07	02,52	12,65	0,023	,0281

Probe-Nr. / Test No / Eprouv. No	Probenabmess. / Sample dimens. / Dimens. d'éprouv.	RP02 RP10	Rm	A5	Z	A_v ISO-V RT	HAERTE HB
	mm	N/mm²	N/mm²	%	%	J	
64977	12 RD	222 267	581	49,0	73,0	296 314 389	133 HB 30

US-PRUEFUNG DURCHGEFUEHRT

DER WERKST. IST INTERKRIST. BESTAEND. NACH DIN50914 OB
MAT. IS RESIST. TO INTERCR. CORR. PURS. TO DIN50914
L'ACIER EST RESIST. A LA CORR. INTERGR. S. DIN50914
PRUEFUNG AUF WERKSTOFFIDENTITAET DURCHGEF.:OB
TESTS TO VERIFY BATCH AND QUALITY:WITHOUT OBJECTION
CONTROLE D'IDENTITE EFFECTUE:PAS D'OBJECTION

Krupp Hoesch Stahl AG
Geschäftsbereich Langprodukte
Qualitätswesen / Stahlkontrolle
Siegen, den
27.09.1993

80883

RG
Graebener

Der Werkssachverständige

CERTIFICAT DE CONTROLE ET DE CONFORMITE

(NFL 00.015 / DIN 50049 § 3.1B / NF A 49.0001 modèle D)

Fournisseur / Supplier :

PRECITUBE
10, Rue de l'Industrie
18290 CHAROST

(C C P U) 3794

N° du certificat : 22818

Date : 4.04.1996

Client / customer : INTERALLOY AG — BL N° / dispatch note : 67059
N° de Cde/ order : 51.2444/95 — Désignation/ component : 24.05x21.95
Nuance/ grade : 316 L S — Poids / weight : ~~2224000~~
Spécification : — Quantité / quantity : 460,00 m
Lot / job order : 60143 — Coulée / heat : 825167 — Origine / origin : 34F7875A

D ext / OD : 24.05/-0.05 — D int / ID : 21.95/+0.05 — Ep / W.T : 1.05 — Long / Lenght : 3à4 m
Relevé : 24.01à24.03 : 21.96à21.97 : :

Composition chimique / chemical composition (%)

	C	Si	Mn	P	S	Cr	Ni	Mo	Ti
Requis :									
Coulée :	0.025	0.47	1.39	0.027	0.006	17.25	11.18	2.06	
C/anal :									

Caractéristiques Mécaniques / mechanical properties / Valeurs en N / mm²

	Rp (Y S) 0.2	RM (TS)	A % (.....)		
Requis				:	Aplati / flattening :
1				:	Pliage / reverse :
2				:	Evasé / flaring :
3				:	Cintrage / bending :
4				:	Concentricité : BONNE

Essai hydraulique / pneumatique (Hydro / pneum test) à ..... bars % : Résultat :
CND : courant de Foucault (Eddy current test) selon % : Résultat :
CND par US (ultrasonic test) selon % : Résultat :
Essai de corrosion (intergranular corrosion) selon : Résultat :
Micrographie (grain size) selon : Résultat :
Macrographie : Résultat :
Autres essais (others test :)
Aspect ext : Ra :
Aspect int : Ra :

Marquage sur tube (marking of tube) :

Nous certifions que, sauf exceptions ou dérogations énumérées ci-dessus, la fourniture citée a été fabriquée conformément aux spécifications techniques du marché, commande ou sous-commande du client et que, toutes opérations de contrôle et d'essais effectuées, elle répond sous tous ces aspects aux spécifications particulières y-jointes, aux plans, ainsi qu'aux normes et réglements en vigueur s'y rapportant.

We certify that, unless exceptions or deviations listed above, the said delivery was manufactured in conformance with applicable purchase technical specifications, orders or suborders, from the customer and that, after all inspection and test operations were performed, the said delivery complies, IN ALL ASPECTS, to proper attached specifications as well as to related drawings, standards and regulations in validity.

Nom et fonction / name and fonction : O. GUERIN — Visa : — Annexe : 83660

Autres renseignements (other information) : SCE CONTROLE

CALORSTAT INDUSTRIES	CERTIFICAT DE RECEPTION 3.1.B suivant DIN 50049 ABNAHMEPRÜFZEUGNIS 3.1.B gem. DIN 50049 / EN 10204

Certificat 2.2 [ ] *Werkszeugnis 2.2* — Certificat 2.3 [ ] *Werksprüfzeugnis 2.3* — 003143

Commettant/Client: *Resteller* Weka	Bulletin de réception N°: *Prüf-Nr:* LT 3642
	Commande N°: *Bestell-Nr:* 39374
	Producteur: *Hersteller:* L-N-T
	Notre commande N°: *Unsere Auftrag-Nr:* 107343
Désignation des produits: *Gegenstand:* Soufflet réf : SH 2800 481.3 *Bellows*	Conditions de fourniture: *Prüfbedingungen:* Tube / *Tube* : X. Rouleau / *Coil* : Planche / *Sheet:*
Matière (Norme): *Werkstoff (Normbez):* AISI 316L	Etat de livraison: *Lieferzustand:* Recuit / *Annealed* : X 1/4 dur / *1/4 hard:*
Marque de qualité: *Werkbezeichnung:*	Marquage: *Kennzeichnung:*
	Poinçon de contrôle: *Stempel des Sachverständigen:* F 4

N° Poste *Pos. Nr*	Nombre *Stückzahl*	Désignation *Gegenstand*	Masse *kg*	N° de coulée *Schmelzen*	N° d'essai *Probe Nr*
	50	Soufflet / *Bellows*		467642	

N° de coulée Schmelzen nr	Composition chimique / *Analyse*											
	Procédé d'élaboration / *Erschmelzungsart* M- Acier Martin/*SM stahl* F- Acier electr. / *Electrostahl* Y - Acier à l'oxygène / *Oxygenstahl*											
	% C	% Si	% Mn	% P	% S	% Cr	% Mo	% Ni	%	%	%	%
467642	0.016	0.43	1.71	0.021	0.005	17.33	2.55	12.98				

Résultats de contrôle:
Ergebnis der Prüfung: Conforme
Les exigences sont remplies selon annexe jointe
Die gestellten Anforderungen sind lt. Anlage erfüllt

NOM DE L'EMETTEUR ET CACHET FOURNISSEUR
M. GRIGNE

LN INDUSTRIES SA
Usine de Champagne - La Nationale
Case postale
CH-1422 Grandson Suisse
Tél. 024/71 12 22 - Fax 024/71 21 79

CERTIFICAT DE CONTROLE 93201341
(DIN 50049/3.1B)

Votre commande	No Confirmation	Pos
39 374 du 25.03.93.	93101012	1
Champagne le :	23.06.93	

LOT 3642

25186

CALORSTAT INDUSTRIES

Z.I. de la Baudrée BP 58

F91416 DOURDAN CEDEX
France

CERTIFICAT DE CONTROLE
No : 93/201341/1

Désignation	Qté commmandée	Qté livrée
1 I26300150200006	500 m.	471 m.

Tube rond : AISI 316L
Non soudé
Dimensions : 26,30 x 26,00 x 0,15 mm.

	CONFIRME		LIVRE	
	MINI	MAXI	MINI	MAXI
Diam. ext. ou 2A mm.	26,24	26,36	26,27	26,29
Diam. int. ou 2B mm.				
Epaisseur paroi mm.	0,144	0,156	0,145	0,155
Longueur mm.	1'800	2'200	1'800	2'200
Poids au mètre gr/m.	env.	97,80		102,4
Poids pièce gr/pce.				
Dureté (200 Grs.) Hv.	150	180	156	160
Rési.traction N/mm2		690	540	542
Allongement %.	35		53	55
Limite élastique :	210		212	223
Grain ASTM.	8,0		7,0	7,5
Controle visuel :			Effectué.	
Taux de ferrite %:			0.	
Test de Monipenny :			Bon.	
Test de gonflement :			Bon.	

CONFORME A LA SPECIFICATION
CALORSTAT N° 201341

ANALYSE CHIMIQUE : DIN No de coulée :467642/SANDVIK,
Al: % Fe: % Si:0,41 % Mo:2,55 % Ti: %
C :0,016 % Pb: % Mn:1,71 % Ni:12,98% V : %
Cr:17,33 % P :0,021% S :0,005% N : % W : %
Cu: % Zn: % Co: % Nb: %
REMARQUES :

CAISSE NO :888/889.

Client ..... No de Cde .....
Of ..... Ref. Client .....
Visa ..... Ref. Calorstat Ind. .....

Service controle qualité

Le responsable technique

SANDVIK Steel

ABNAHME-
PRUEFZEUGNIS
GEMAESS
EN 10 204 3.1.B

CERTIFICATE No: 198591 TG Page: 1

P/N No	Date of certificate	Customer/Internal namn
48163/54	961024	WEKA BAERE

Date of order	Customer order No	Cust No/Exp (Cons.)
961010	HERR KAGI	310-0991/30(

SOPIC No	ABSS No	SUBS No	Cust No/Exp (Buyer)
167134	300-20343	59347	310-8002/30(

SANDVIK AG
LIMMATSTRASSE 2
CH 8957 SPREITENBACH
SCHWEIZ

003757

GEGENSTAND:
NICHTROSTENDE STAHLROHRE

MARKENBEZEICHNUNG:
SANDVIK 3R60

STEMPEL DES WERKS-
SACHVERSTAENDIGEN

!QA-TUBE!

ERSCHMELZUNGSART:
E

TECHNISCHE ANFORDERUNGEN:
DIN 17458 PRUEFKLASSE 1

KURZNAME:
X2CRNIMO18143

WERKSTOFF NR:
1.4435

UMFANG DER LIEFERUNG:

POS	ABMESSUNG(MM) ETC.	ANZAHL	QUANTITAET	SCHM.NR	LOS NR
02	TST-E-3R60-57-2.9	2	50.0	438959	41496
	TOTAL	2	50.0 KG		

SCHMELZENANALYSE (%):

SCHM.NR	C	SI	MN	P	S	CR	NI	MO
438959	.008	.48	1.60	.027	.008	17.44	12.90	2.52

PRUEFERGEBNISSE:

LOS NR	RP0.2 N/MM2	RP1.0	RM N/MM2	A5 %	HAERTE	WASSER DRUCKPRUEFUNG MPA
41496	268	316	579	51		8.0

SPEKTROSKOPISCHE VERWECHSLUNGSKONTROLLE: GUTGEHEISSEN.
VISUELLE BESICHTIGUNG UND MASSKONTROLLE: GUTGEHEISSEN.
INTERKRISTALLINE KORROSIONSPRUEFUNG GEMAESS DIN 50914: GUTGEHEISSEN.
RINGAUFDORNVERSUCH: GUTGEHEISSEN.
KENNZEICHNUNG DER ROHRE:
SANDVIK 3R60 W.NR 1.4435 C2 S PK 1 57.00 X 2.90 HT 438959

WAERMEBEHANDLUNG: LOESUNGSGEGLUEHT UND ABGESCHRECKT.

UNSERE PRODUKTE SIND GEMAESS EINEM QUALITAETSSYSTEM HERGESTELLT,
WELCHES GEMAESS ISO 9001 ZUGELASSEN UND REGISTRIERT IST

EA 196 94-03 BOBERGS FALUN 72367 MO

AB SANDVIK STEEL
Quality Assurance Department
ANITA RUNSTEN / CERTIFICATES

Beteckningar enligt ISO, v g vänd
Symbols according to ISO, PTO
Kurzzeichen laut ISO b.w.
Symboles selon ISO, t.s.v.p.

80061

Postal address	Telephone	Division	Telefax	MEMO	Bankers	Postal giro accou
		Strip	+46 26 27 23 07	SESTLXST		
	Nat 026-26 00 00	Wire	+46 26 27 47 20	SESTLXWI		
AB SANDVIK STEEL	Int +46 26-26 00 00	Tube	+46 26 25 27 70	SESTLXTU	Svenska Handelsbanken	
S-811 81 SANDVIKEN	Telex	Semif.Prod.	+46 26 26 40 30	SESTLXSO	S-E Banken	
SWEDEN	47000 sandvik s	Special Metals	+46 26 27 20 20	SESTLXZ	Nordbanken	67 14-0

Ugine-Savoie

FRANCE

5 Usine Productrice / Hersteller / Manufacturer: **UGINE** — F 73403 UGINE CEDEX — Tél : 79.89.90.90 — télex usine 980 050

4 N. Nr No 85696

11 N. de commande usine-Werkstellenummer-Works order number: FUGE FUG5 1/1 5V071000 R

3

CERTIFICAT DE RECEPTION 3.1.B (CCPU)
ABNAHMEPRUEFZEUGNIS 3.1.B
INSPECTION CERTIFICATE 3.1.B

EN 10204 / DIN 50049

003647

Produit / Erzeugnisform / Product: STAB GEWALZT ABGESCHRECKT ENTZUNDERT GERICHTET

Client final - destinataire - Besteller und/oder Empfänger - Purchaser and/or Consignee: THYSSEN (Schweiz) AG, CH-9500 Wil 9

N. de commande client - Kundabestellnummer - Purchaser order number: 712216/L

Nuances et spécifications techniques - Stahlsorte und Pruefbedingungen - Quality and Specifications: AD-W 2 WNR 1.4435

DIN 17440 WNR 1.4435/BASLER NORM BN2

Etat de livraison - Lieferzustand - As delivered (1): ABGESCHRECKT UND GERICHTET 13

Traitement de Référence - Probestreifenbehandlung - Treatment of test samples (1):

Identification du produit / Erzeugnis Benennung - Product identification: N. de cde usine / Werkstellenummer / Works order number 16	N. de poste / Post Nr / Item No 17	N. de Coulée / Schmelz Nr / Heat No 18	Nombre / Stueckzahl / Pieces Nbr 15	Profil / Profile / Shape 19-20	Longueur / Laenge / Length 21	Masse / Gewicht / Weight 22
5V071 000		520035	10	RUND	80,000	1918 KG

N. de Prélèvement / Probenummer / Test N. 39 B		Demande-Vorschrift-Required (3) 24	Prélèvement Probenahme Direction 25	Température d'essai / Prueftemperatur / Test Temperature	Traction - Zugversuch - Tensile test: Limite d'Elasticité / Streckgrenze / Yield strength 0,2 % 26 A	1 % 26 B	Résistance à la traction / Zugfestigkeit / Tensile strength 27	Allongement / Bruchdehnung / Elongation 28	Striction / Einschnuerung / Reduction of Area 29	Dureté / Haerte / Hardness (4) 30	Résilience - Kerbschlagzaehigkeit - Notch Toughness: Type / Form / Type 31	Sens / Richtung / Direction (3) 32	Température d'essai / Prueftemperatur / Test Temperature 33	Valeurs individuelles / Einzelwerte / Individual values 36	Moyenne / Mittelwerte / Average 35	Dureté / Haerte / Hardness (5) 37
0140			L	RT	N/MM2	N/MM2	N/MM2	%			ISOV	L	RT	J		
		Min			190	225	490	35						35,0		
		Max					690									
		(4)														
		(5)			255	295	535	60						225-242-230		
					245	285	540	59						224-240-235		
					255	290	530	59						218-238-224		
					240	280	535	61						218-224-240		

39 A N. de Prélèvement / Probenummer / Test N.		40	41	42	43	44	45	46	47	48	49	50
	Demande / Vorschrift / Required	Min	Analyse produit / Stueckanalyse / Check Analysis	C	SI	MN	NI	CR	MO	N	TI	S
							12,5	17,0	2,5			
		Max		0,03	1,0	2,0	14,0	18,0	3,0	0,100	0,0500	0,025
	N. de Coulée / Schmelz Nr / Heat N.											
	520035			0,02	0,4	1,5	12,6	17,0	2,5	0,039	0,0001	0,021

d'élaboration / Erschmelzungsart / Melting process		51	52	53	54	55
Electrique / Elektrisch / Electric	Demande / Vorschrift / Required Min	P				
	Max	0,045				
		0,021				

% FERRITOSCOPE = 0,03
TUEV-ZULASSUNG NACH WO+TRD100 ; ZUSTIMMUNG DES TUEV SUEDWEST LIEGT VOR
AUF GEGENZEICHNUNG WIRD VERZICHTET
INTERKRISTALLINE KORROSION BESTAENDIG NACH DIN 50914 § 9.1/IDENTIT. GEPRUEFT
INNERE FEHLERFREIHEIT DURCH PROZESS-KONTROLLE GARANTIERT
TUEV QUALIFICATION ACC. TO WO+TRD100 / AGREEMENT BY TUEV SUEDWEST.
INTERCRYSTAL. CORROSION RESISTANT ACC. TO EURONORM 114 / ANTIMIXING TESTED
FREEDOM FROM INTERNAL DEFECT GUARANTEED BY CONTROL PROCESS

56

(3) L = Long / Laenge - Long; T = Travers / Quer-Transverse 58

(1) TE = Trempé à l'eau - Wasserhaerten - Waterquench; TH = Trempé à l'huile - Oelhaerten - Oil Quench; A = Hypertrempé - Loesungsgegluht - Solution annealed; R = Revenu - Anlassen - Tempered; RT = Recuit - Geglueht - Annealed; TRM = Recuit maxi - Weichgegluht - Maxi annealed 7

(4) A l'état de référence / Zum Bezug Zustand / At reference condition 90 A

(5) A l'état de livraison / In Lieferzustand / In state of delivery 90 B

Contrôles de marquage, d'aspect et de dimensions satisfaisants / Bezeichnung, Besichtigung und Ausmessung : ohne Beanstandung / Marking, inspection and measurement : without objection 62

Nous certifions que les produits énumérés ci-dessus sont conformes aux prescriptions de la commande / Wir bestaetigen hiermit dass die obengenannten Erzeugnisse den Bestellungsvorschriften entsprechen / We certify hereby that the above mentioned products are consistent with the order prescriptions 66

Ugine, le 16-06-95

L'Agent Réceptionnaire de l'usine / Der Werksabnahmeverstaendige / The Work inspector

QR6

D. Thivellier

80148

SANDVIK Steel

ABNAHME-
PRUEFZEUGNIS
GEMAESS
EN 10 204 3.1.B

CERTIFICATE No: 14059 TQ Page: 1

P/N No	Date of certificate	Customer/Internal name
45653/54	950217	SANDSWISS

Date of order	Customer order No	Cust No/Exp (Cons.)
950216		310-8002/30

Date of order	Our order No	Cust No/Exp (Buyer)
	300-50564 59526	310-8002/30

SANDVIK AG
LIMMATSTRASSE 2
CH 8957 SPREITENBACH
SCHWEIZ

003476

STEMPEL DES WERKS SACHVERSTAENDIGEN
!QA-TUBE!

GEGENSTAND:
NAHTLOSE KALTGEPILGERTE
NICHTROSTENDE STAHLROHRE

MARKENBEZEICHNUNG:
SANDVIK 3R60

ERSCHMELZUNGSART:
E

TECHNISCHE ANFORDERUNGEN:
DIN 17458 PRUEFKLASSE 1

KURZNAME:
X2CRNIMO18143

WERKSTOFF NR:
1.4435

UMFANG DER LIEFERUNG:

POS	ABMESSUNG(MM) ETC.	ANZAHL	QUANTITAET	SCHM.NR	LOS NR
01	TST-3R60-48.3-3.25	8	180.0	433217	54696
	TOTAL	8	180.0 KG		

SCHMELZENANALYSE (%):

SCHM.NR	C	SI	MN	P	S	CR	NI	MO
433217	.010	.38	1.58	.024	.009	17.34	12.96	2.57

PRUEFERGEBNISSE:

LOS NR	RP0.2 N/MM2	RP1.0	RM N/MM2	A5 %	HAERTE	WASSER DRUCKPRUEFUNG MPA
54696	316	352	549	47		8.0

SPEKTROSKOPISCHE VERWECHSLUNGSKONTROLLE: GUTGEHEISSEN.
VISUELLE BESICHTIGUNG UND MASSKONTROLLE: GUTGEHEISSEN.
INTERKRISTALLINE KORROSIONSPRUEFUNG GEMAESS DIN 50914: GUTGEHEISSEN.
RINGAUFDORNVERSUCH: GUTGEHEISSEN.
KENNZEICHNUNG DER ROHRE:
SANDVIK 3R60 W.NR 1.4435 H S FK 1 48.30 X 3.25 HT 433217

WAERMEBEHANDLUNG: LOESUNGSGEGLUEHT UND ABGESCHRECKT.

EA 196 93-01 BOBERGS FALUN 65678 MO

AB SANDVIK STEEL
Quality Assurance Department
ANITA RUNSTEN / CERTIFICATES

Beteckningar enligt ISO, v g vänd
Symbols according to ISO, PTO
Kurzzeichen laut ISO b.w.
Symboles selon ISO, t.s.v.p.

80055

Postal address	Telephone	Division	Telefax	MEMO	Bankers	Postal giro accou
		Strip	+46 26 27 23 07	SESTLXST		
	Nat 026-26 00 00	Wire	+46 26 27 47 20	SESTLXWI		
AB SANDVIK STEEL	Int +46 26-26 00 00	Tube	+46 26 25 27 70	SESTLXTU	Svenska Handelsbanken	
S-811 81 SANDVIKEN	Telex					

Acciaierie Valbruna s.r.l.

36100 Vicenza (Italia) - V.le della Scienza, 25

Telex 480090 VALV I - Telegrammi: Acciaierie Valbruna - Fax (0444) 963836
Telef. (0444) 968211 (30 linee R.A.) - Casella Postale 784 - C.C.I.A.A. 190669
Canc. Tribunale di Vicenza n. 19944 - Cod. Fisc. e Partita IVA 01863340244

ABNAHMEPRUEFZEUGNIS /CERTIFICAT DE CONTROLE
CERTIFICATO DI COLLAUDO/ TEST CERTIFICATE
DIN 50049, 3.1.B. - EN 10204, 3.1.B.

zu Lieferanzeige Nr. 96/ 285-P

Prüf Nr. 1802/96

Werks - Nr. 95 V 244
Our Order No. / No. ref. / Ord. Stabilimento Nr.

Besteller: AVESTA-VALBRUNA AB
65224 KARLSTAD - SWEDEN
Purchaser / Client / Cliente

Thyssen

Bestell - Nr. ORD. R03615 BNO
Yr order No. / No. de commande / Ordine Nr.

003786

Hersteller: ACCIAIERIE VALBRUNA s.r.l.
Manufacturer / Usine productrice / Fabbricante

Erschmelzungsart: E
Melting process / Mode d'elaboration / Tipo di elaborazione

Zeichen des Lieferwerkes:
Trade mark
Sigle de l'usine productrice
Marchio di fabbrica

Prüfgegenstand: PEELED ANNEALED
Item inspected / Finissage / Oggetto prove

Stempel des Werkssachverständigen
Inspector's stamp
Poinçon de l'expert
Punzone del collaudatore

Anforderungen: MS-RB-203,4,1.4435
BN 2,88,1.4435
Requirements / Exigences / In base alle specifiche

AD-W2,90,1.4435
DIN 17440,85,1.4435

Werkstoff (Normbezeichnung): X2CRNIMO18 14 3
Quality and specification / Nuance et specification techniques / Qualità (seconda norme)

Nach:
Acc. to / Selon / Secondo

Ma[redacted]zeichnung: PKA3637 [PRODEC]
Valbruna Brand / Nuance Valbruna / Marca Valbruna

Kennzeichnung: W.NR.1.4435
Marking / Marquage / Punzonatura

Pos. Nr. Item No. No. de poste Pos. Nr.	Gegenstand Product description Description du produit Oggetto	Abmessungen Dimension Dimension Dimensioni	Länge Length Longueur Lunghezza	Schmelze Heat Coulée Nr. Colata	Stückzahl Pieces Piece Nr. Pezzi	Gewicht Weight Poids Kg. Peso	Losnr. Lot. No. Lot. No. Nr. Lotto
1	ROUND	91.40	LGTH: 3040 mm	250815	2	316	950242760

1. Besichtigung und Ausmessung: Ohne Beanstandung
Visual inspection and dimensional checks: satisfactory
Controle visuel et dimensions: satisfaisant
Controllo visiva e dimensionale

2. Zugversuch nach DIN 50145
Tensile test acc. to DIN 50145
Traction selon DIN 50145
Prove di trazione

3. Kerbschlagbiegeversuche, nach DIN 50115
Notch toughness acc. to DIN 50115
Essai de resilience selon DIN 50115
Prova di resilienza

TEST	Probestab Specimen / Eprouvette / Provetta Breite Ø Dicke Width Ø Thickness Larg. Ø Epais Largh. Spess. mm. mm.	Probenlage 1) Longitudinal / Longitudinal / Posizione del sagio	0.2%-Grenze Yield stress Limite elastique Snervamento $R_{0.2}$ N / mm²	1% Dehngrenze Yield stress Limite elastique Snervamento R_{1} N / mm²	Zugfestigkeit Tensile strength Résistance à la traction Resistenza R N / mm²	Bruchdehnung Elongation Allongement Allungamento A %	Einschnürung Reduction of area Striction à la rupture Strizione Z %	Kerbschlagarbeit Impact value Resilience Lavoro assorbito KV J	
Anforderungen Required values / Valeurs demandées Valori richiesti		min max	190	225	490 690	35	50.0	85	
[redacted]	10	L	268	314	594	56	67.2	186 192 176	

1) L = längs / longitudinale, q = quer / transversale, t = tangential / tangenziale.

Chemische Zusammensetzung (Schmelzenanalyse) in Gew. - %
Chemical analysis / Analyse chimique / Analisi chimica

Schmelze Nr. Heat No. / No. de coulée Colata Nr.	C	Si	Mn	Cr	Ni	Mo	Cu	Ti	Al	P	S	N	
250815	0.018	0.43	1.69	17.29	12.54	2.58	0.48	0.041	0.003	0.029	0.019	0.095	

Annealed from
Hypertrempé à 1100
Abschrecken von _____ / WATER

Anlagen
Enclosure
P.J.
Allegati

Ferrite contents: 5.88

- Das vorgenannte Material wurde nach DIN
- 50914 geprueft. Es ist beastaendig gegen
- Interkristalline korrosion.

Antimixing testing performed: OK
Controlo antimistura fatto: R.A.S.

Verwechslungspüfung: spektralanalytisch durchgeführt

Die gestellten Anforderungen sind lt. Anlage erfüllt
The material has been furnished in accordance with the requirements
Le materiel a ete trouve conforme aux exigences
Sono state soddisfatte le condizioni richieste

Auf eine Gezeichnung durch die zustaendige Technische Ueberwachungsorganisation kann auf Grund des Schreibens des TUEV BAYERN vom 21.05.1979 verzichtet werden.

~~V00606~~ V00607 950786

Vicenza, den 19/01/96

80150

950264

...erie
...runa s.r.l.
...enza (Italia) - V.le della Scienza, 25
...480090 VALVI I - Telegrammi: Acciaierie Valbruna - Fax (0444) 963836
...ef. (0444) 968211 (30 linee R.A.) - Casella Postale 784 - C.C.I.A.A. 190669
...nc. Tribunale di Vicenza n. 19944 - Cod. Fisc. e Partita IVA 01863340244

ABNAHMEPRUEFZEUGNIS /CERTIFICAT DE CONTROLE
CERTIFICATO DI COLLAUDO/ TEST CERTIFICATE
DIN 50049, 3.1.B. - EN 10204, 3.1.B.

zu Lieferanzeige Nr. 95/ 5287-P

Prüf Nr. 36921/95

Werks - Nr. 95 V 75
Our Order No. / No. ref. / Ord. Stabilimento Nr.

...steller : AVESTA-VALBRUNA AB 65224 KARLSTAD - SWEDEN
...chaser / Client / Cliente

Bestell - Nr. ORD. R03213
Yr order No. / No. de commande / Ordine Nr.

...rsteller : ACCIAIERIE VALBRUNA s.r.l.
...ufacturer / Usine productrice / Fabbricante

Erschmelzungsart: E
Melting process / Mode d'élaboration / Tipo di elaborazione

Zeichen des Lieferwerkes:
Trade mark
Sigle de l'usine productrice
Marchio di fabbrica

...ifgegenstand: PEELED ANNEALED
...Inspected / Finissage / Oggetto prove

Stempel des Werkssachverständigen
Inspector's stamp
Poinçon de l'expert
Punzone del collaudatore

...forderungen: MS-RB-203,4,1.4435, AD-W2,90,1.4435 / BN-2,88,1.4301
...irements / Exigences / In base alle specifiche

...rkstoff (Normbezeichnung): X2CRNIMO 18 14 3
...lity and specification / Nuance et spécifications techniques / Qualità (seconda norma)

Nach: DIN 17440,85,1.4301
Acc. to / Selon / Secondo

...rkenbezeichnung: PKA3637
...runa B... Nuance Valbruna / Marca Valbruna

Kennzeichnung: W.NR.1.4435
Marking / Marquage / Punzonatura

...s. Nr. Heat No. No. de coulée Pos. Nr.	Gegenstand Product description Description du produit Oggetto	Abmessungen Dimension Dimension Dimensioni	Länge Lenght Longueur Lunghezza	Schmelze Heat Coulée Nr. Colata	Stückzahl Pieces Pièces Nr. Pezzi	Gewicht Weight Poids Kg. Peso	Losnr. Lot. No. Lot. No. Nr. Lotto
8	ROUND	91.40	4590/ 4600 mm	250815	13	3096	95075640

...esichtigung und Ausmessung: Ohne Beanstandung
...al inspection and dimensional checks: satisfactory
...role visuel et dimensions: satisfaisant
...collo visivo e dimensionale

2. Zugversuch nach DIN 50145
Tensile test acc. to DIN 50145
Traction selon DIN 50145
Prove di trazione

3. Kerbschlagbiegeversuche, nach DIN 50115
Notch toughness acc. to DIN 50115
Essai de resilience selon DIN 50115
Prova di resilienza

TEST	Probestab Specimen / Eprouvette / Provetta Breite ∅ Dicke Width ∅ Thickness Larg. ∅ Epais. Largh. Spess. mm. mm.	Probenlage 1) Location / Emplacement / Posizione del saggio	0.2%-Grenze Yield stress Limite elastique Snervamento Rp N / mm²	1% Dehngrenze Yield stress Limite elastique Snervamento Rs N / mm²	Zugfestigkeit Tensile strength Résistance à la traction Resistenza R N / mm²	Bruchdehnung Elongation Allongement Allungamento A5 %	Einschnürung Reduction of area Striction à la rupture Strizione Z %	Kerbschlagarbeit Impact value Resilience Lavoro assorbito KV J	
Anforderungen Required values / Valeurs demandées Valori richiesti		min max	190	225	490 690	35	50	85	
A	10	L	267	315	592	60	75	210 204 196	
[illegible]	"	L	278	314	590	61	74	202 208 214	
[illegible]	"	L	279	312	610	60	75	200 206 212	
D	"	L	277	310	604	61	74	205 206 210	

1) l = lungo / longitudinale, q = quer / transversale, t = tangenziale / tangenziale.

Chemische Zusammensetzung (Schmelzenanalyse) in Gew. - %
Chemical analysis / Analyse chimique / Analisi chimica

...chmelze Nr. No. / No. de coulée Colata Nr.	C	Si	Mn	Cr	Ni	Mo	Cu	Ti	Al	P	S	N
50815	0.018	0.43	1.69	17.29	12.54	2.58	0.48	0.041	0.003	0.029	0.019	0.095

Annealed from
Hypertrempé à
Abschrecken von 1100 °C / WATER

Anlagen
Enclosure
P.J.
Allegati

- Das vorgenannte Material wurde nach DIN
- 50914 geprueft. Es ist bestaendig gegen
- interkristalline korrosion.

Antiruggine testing performed: OK
Controle antiruggine fait: R.A.S.
Verwechslungspüfung: spektralanalytisch durchgeführt

Die gestellten Anforderungen sind lt. Anlage erfüllt
The material has been furnished in accordance with the requirements
Le material a ete trouve conforme aux exigences
Sono state soddisfatte le condizioni richieste

Ferrite contents: 5.88

V00555/950264

Auf eine Gazeichnung durch die zustaendige Technische Ueberwachungsorganisation kann auf Grund des Schreibens des TUEV BAYERN vom 21.05.1979 verzichtet werden.

Vicenza, den 30/11/95

Der Werkssachverständige
Works-Inspector / L'Agent d'usine
Il Collaudatore di stabilimento

970304

Pneum. actuator: (von Rohr)
-preload 7mm; stroke 10mm
controle pres.:
-min 2,0 bar(g)
-adjusted 2,5-6,0 barg
-spring set 3S
-normally closed
-pillars l=166mm

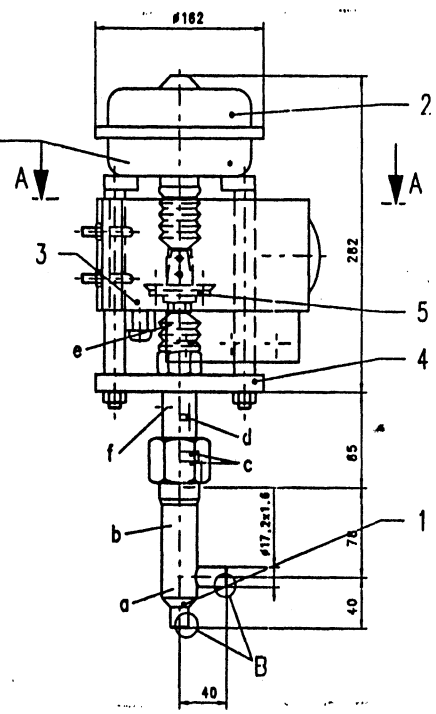

Spare item	Parts No.	description		Nos per valve
a	34659	seat seal	PTFE	1
b	35165	inset	316L	1
c	80473	O-Ringø21,89x2,62	NBR70	2
d	80459	O-Ringø13,95x2,62	NBR70	1
e	29576	rubber bellows		1
f	82209	gasket ø14/10x1	Cu	1

-testing, finish and documentation acc.
'Standard Delivery for Cryogenic Valve' dated 11.04.95

Detail B

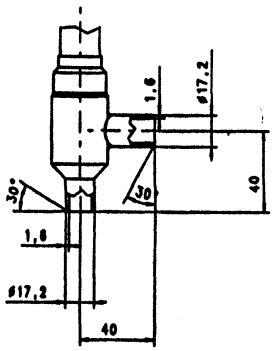

item No.	item 1
Tag - No.	CV 1
project	BABAR Cryogenic-valves
Order-No.	BC 190548
fabrication-No.	C-132769
k_v executed	2,80 =%
trim-No.	34644
weight tot.	70 N
WEKA - type	P-WEV DN10/PN25 C-Po, 316L

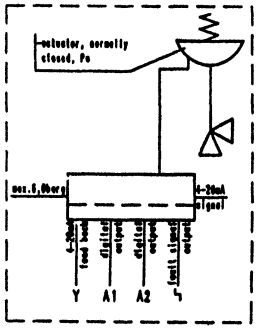

(signal 4..20mA =
0..100% of valve stroke
i.e. 4mA = valve closed)

A - A

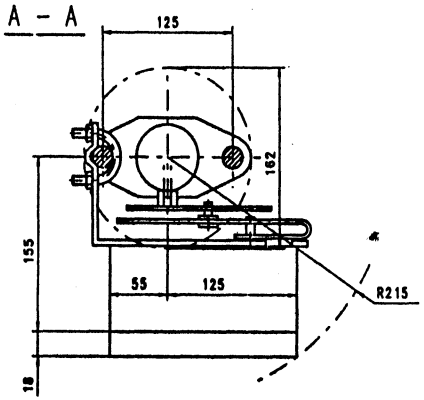

Pos.	Menge	Einh.	Art.- Nr	Benennung und/oder Werkstoff		Bemerk.
5	1.00	St	81868	Coupling M12	St	
4	1.00	St	32636	Flange ø27.5	St	
3	1.00	St	83425	SIPART PS 6DR 30001-N/Rückm. seitl.		
2	1.00	St	83550	Pneu. actuator MA3.16A6 3S Po8	-	
1	1.00	St	35064	WEV DN10 / PN25	316L	

Änd. | Änd. | Ersatz für: | Dozname: KXK33PCU | A/N Key:

Benennung: P-WEV DN10/PN25 C-Po
Ansaldo Energia s.p.a.; I-16125 Genova

M'stab 1:1 | Gezeichn. 03.03.1997 HU | Geprüft | Ohne sep. Stückl. | Sep.Stückl.gl.Nr. | Anz. Blatt | Blatt-Nr.

WEKA
Weka AG, Schörlistrasse 8
CH-8344 Bäretswil

Format 2 | Zeichnungs-Nr. 970304 | Index

970314

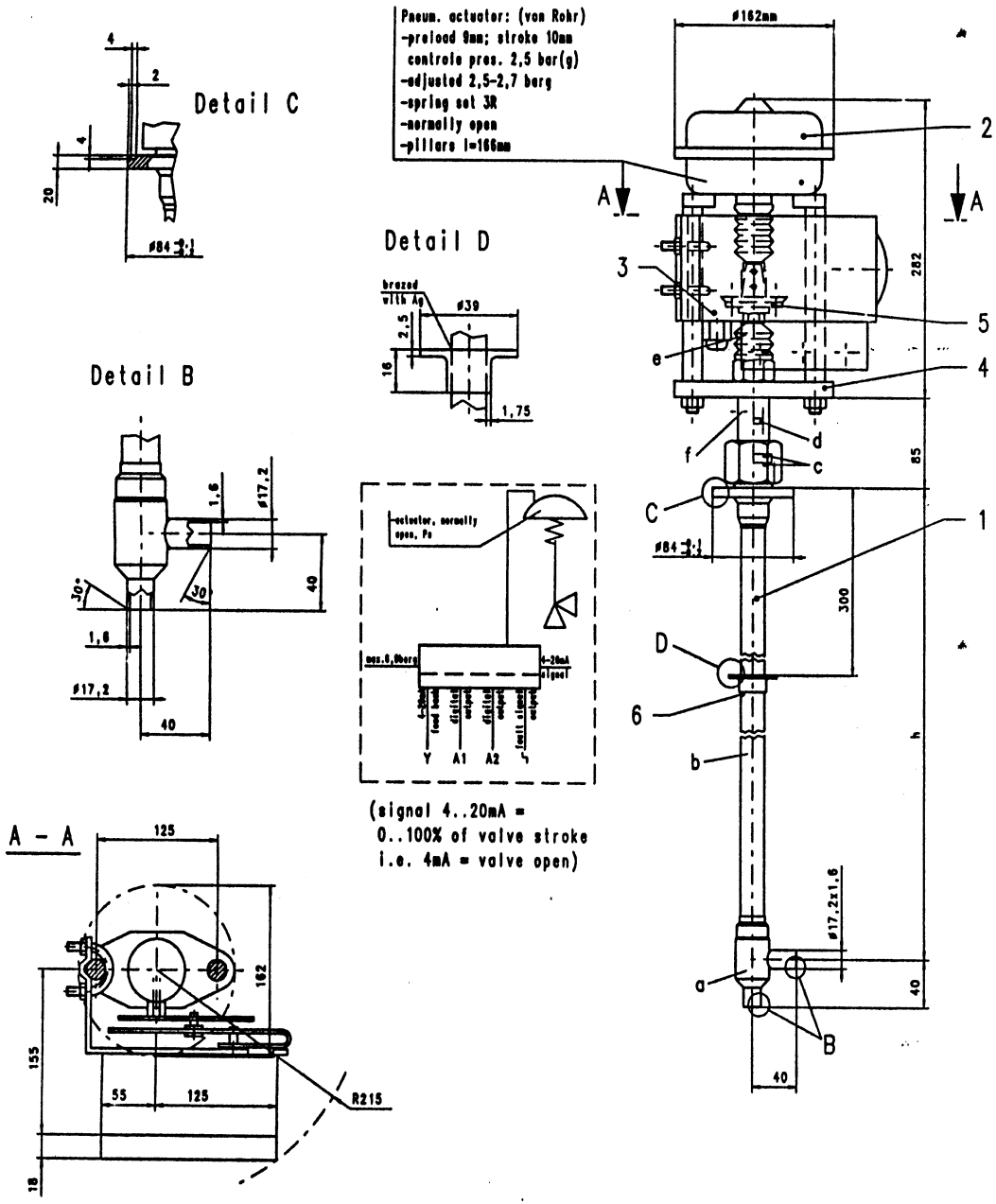

Spare item	Parts No.	description		Nos per valve CV 2	CV 4
a	34659	seat seal	PTFE	1	1
b	35052/600	inset	316L	1	1
c	80473	O-Ring ø21,89x2,62	NBR70	2	2
d	80459	O-Ring ø13,95x2,62	NBR70	1	1
e	29576	rubber bellows		1	1
f	82209	gasket ø14/10x1	Cu	1	1

-testing, finish and documentation acc.
'Standard Delivery for Cryogenic Valve' dated 11.04.95

item No.	item 2	item 4
Tag - No.	CV 2	CV 4
project	BABAR Cryogenic valve	
Order-No.	BC 190548	
dim. h	600	600
fabrication-No.	C-132770	C-132772
k_v executed	2,8 =%	
trim-No.	34644	
weight tot.	105 N	
WEKA - type	P-TEV DN10/PN25 C-Ps, h= 600/h2= 300, ø 84, 316L	

Pos.	Menge	Einh.	Art.- Nr	Benennung und/oder Werkstoff		Bemerk.
6	1.00	St	35053	Thermalizing collar	Cu-FTP1	
5	1.00	St	81868	Coupling M12	St	
4	1.00	St	32636	Flange ø27.5	St	
3	1.00	St	83425	SIPART PS 6DR 3100-1N/Rückm. s	St	
2	1.00	St	83452	Pneu. actuator MA3.16A6 3R Ps9	-	
1	1.00	St	35057/600	TEV DN10 / PN25 ø84	316L	

Änd. a 22.04.1997 HU

Ersatz für:

Dosname: KXK3DHRL

A/N Key:

Benennung: P-TEV DN10/PN25 C-Ps

Ansaldo Energia s.p.a.; I-16125 Genova

M'stab 1:1

Gezeichn. 17.03.1997 HU

Geprüft

Ohne sep. Stückl.

Sep.Stückl.gl.Nr.

Anz. Blatt

Blatt-Nr.

WEKA Weka AG, Schärfistrasse 8 CH-8344 Bäretswil

Format 2

Zeichnungs-Nr. 970314

Index a

970321

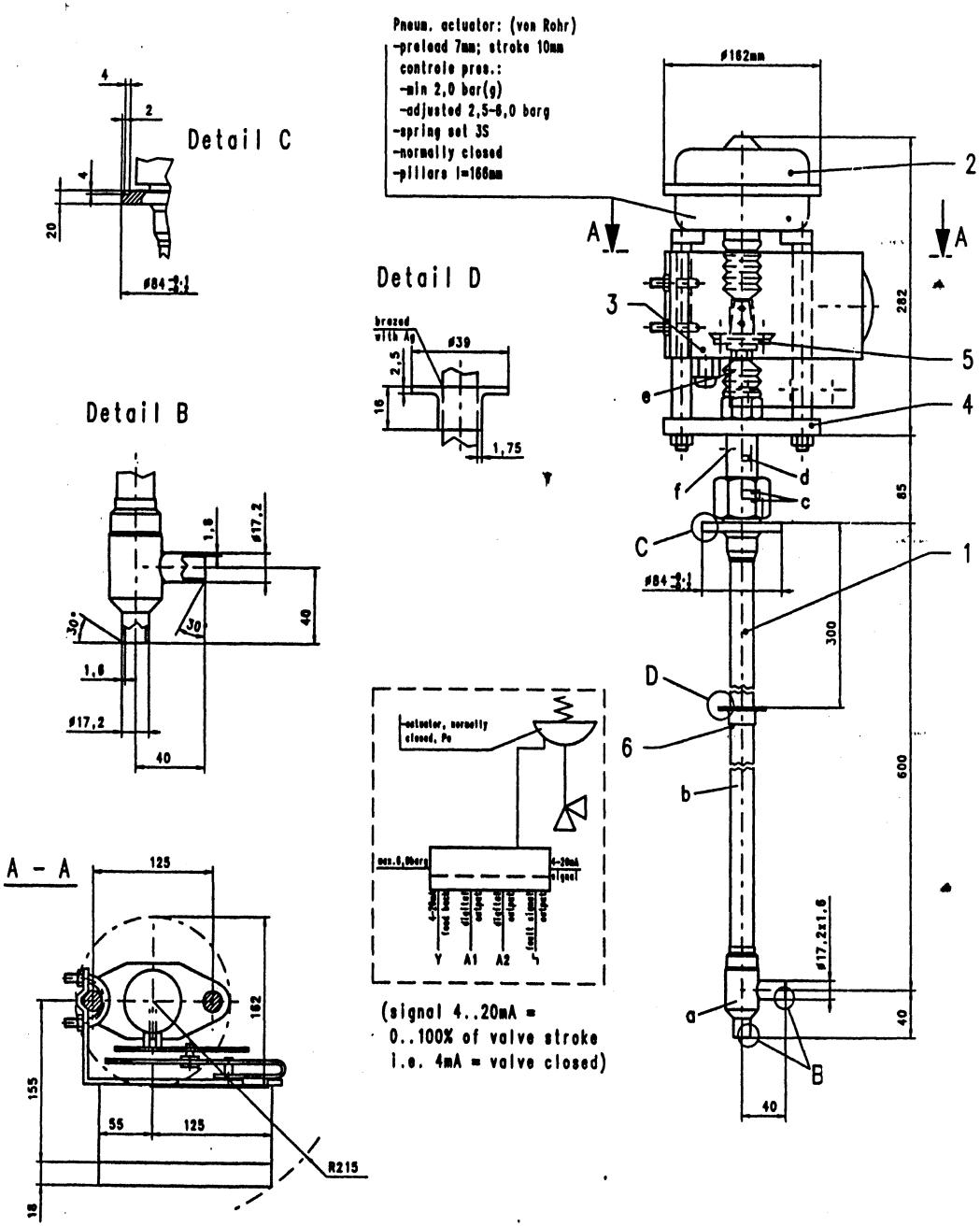

Spare item	Parts No.	description		Nos per valve
a	34659	seat seal	PTFE	1
b	35052/600	inset	316L	1
c	80473	O-Ring ø21,89x2,62	NBR70	2
d	80459	O-Ring ø13,95x2,62	NBR70	1
e	29576	rubber bellows		1
f	82209	gasket ø14/10x1	Cu	1

-testing, finish and documentation acc.
'Standard Delivery for Cryogenic Valve' dated 11.04.95

Item No.	item 3
Tag - No.	CV 3
project	BABAR Cryogenic valve
Order-No.	BC 190548
dim. h	600
fabrication-No.	C-132771
k_v executed	2,8 =%
trim-No.	34644
weight tot.	105 N
WEKA - type	P-TEV DN10/PN25 C-Po, h= 600 /h2= 300, ø 84, 315L

Pos.	Menge	Einh	Art.-Nr	Benennung und/oder Werkstoff		Bemerk.
6	1.00	St	J5053	Thermalizing collar	Cu-ETP1	
5	1.00	St	81868	Coupling M12	St	
4	1.00	St	J2636	Flange ø27.5	St	
3	1.00	St	83425	SIPART PS 6DR 3100-1N/Rückm. a	St	
2	1.00	St	83550	Pneu. actuator MAJ. 16A6 JS PoB	-	
1	1.00	St	J5057/600	TEV DN10 / PN25 ø84	316L	

Änd. | Änd.

Ersatz für: | Dessone: KXK3HRLW

A/N Key:

Benennung: P-TEV DN10/PN25 C-Po

Ansaldo Energia s.p.a.; I-16125 Genova

M'stab 1:1 | Gezeichn. 17.03.1997 HH | Geprüf.: | Ohne sep. Stückl. | Sep.Stückl.gl.Nr. | Anz. Blatt | Blatt-Nr.

WEKA AG, Schöftlistrasse 8, CH-8344 Bäretswil

Format 2 | Zeichnungs-Nr. 970321 | Index

970322

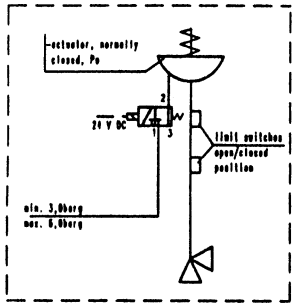

Pneum. actuator: (von Rohr)
-preload 6mm; stroke 32mm
-controle pres.:5,0 barg
-adjusted 5,0-5,2 barg
-spring set 5S
-normally closed
-pillars l=226mm

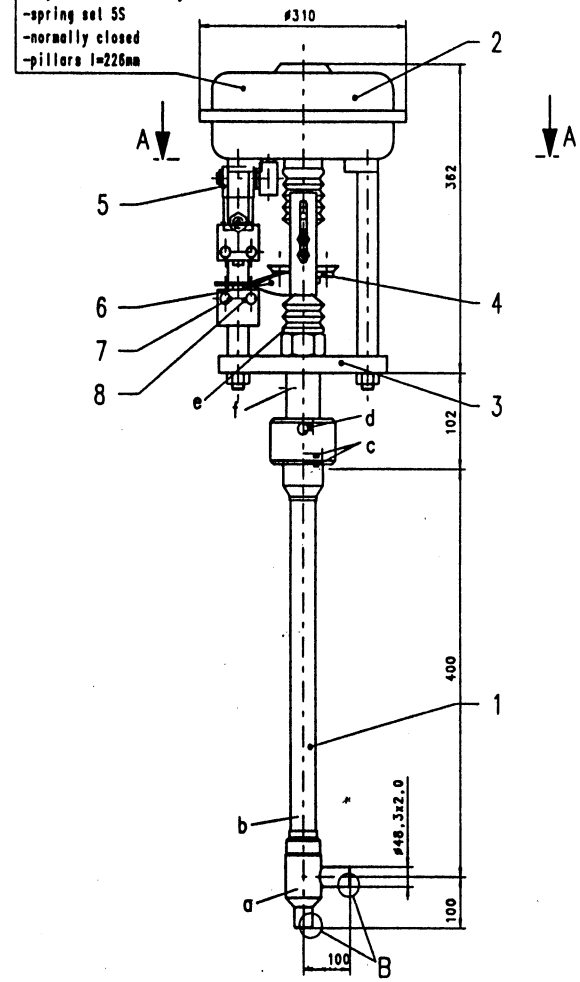

Spare item	Parts No.	description		Nos per valve
a	28034	seat seal	PTFE	1
b	34430/400	inset	316L	1
c	80151	O-Ringø59,92x3,53	NBR70	2
d	83484	O-Ringø23,40x3,53	NBR70	1
e	33433	rupper belows		1
f	81472	gasketø14/10x1,0	Cu	1

-testing, finish and documentation acc.
'Standard Delivery for Cryogenic Valve' dated 11.04.95

item No.	item 7
Tag - No.	V 4
project	BABAR Cryogenic valve
Order-No.	BC 190548
fabrication-No.	C-132775
k_v executed	45,0 dig
trim-No.	26455
weight tot.	350 N
WEKA - type	P-TEV DN40/PN25 D-Po, h= 400, 316L

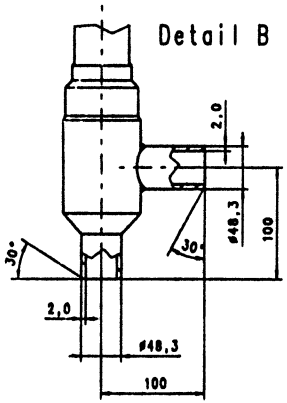

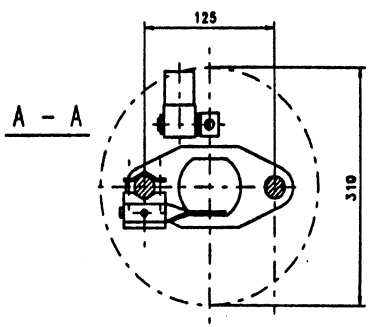

Pos.	Menge	Einh.	Art.- Nr	Benennung und/oder Werkstoff		Bemerk.
8	2.00	St.	34265	Mounting plate for limit switc	-	
7	2.00	St.	82208	Limit switches	-	
6	1.00	St.	82216	Operating handle	-	
5	1.00	St.	83464	3/2 way solenoid valve DN4	-	
4	1.00	St.	82269	Coupling M16	St	
3	1.00	St.	32696	Flange ø46	St	
2	1.00	St.	81928	Pneu. actuator MA3.31B5SPo8	-	
1	1.00	St.	34541/400	TEV DN40 / PN25	316L	

Änd.			Änd.		
a	17.07.1997 HU			Ersatz für:	Dosname: KXK311MT
				A/N Key:	

Benennung	M'stab	Gezeichn.	18.03.1997	HU
P-TEV DN40/PN25 D-Po	1:1	Geprüft		
Ansaldo Energia s.p.a.; I-16125 Genova		Ohne sep. Stückl.		Sep.Stückl.gl.Nr.
		Anz. Blatt		Blatt-Nr.

WEKA®
Weka AG, Schärlistrasse 8
CH-8344 Bäretswil

Format	Zeichnungs-Nr.	Index
2	970322	a

970323

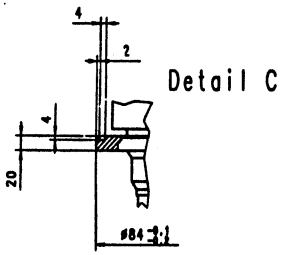

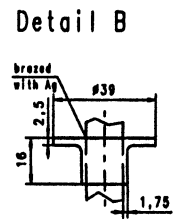

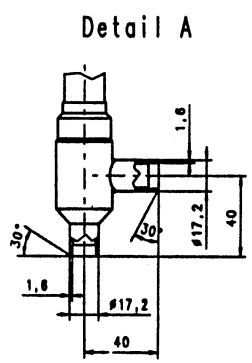

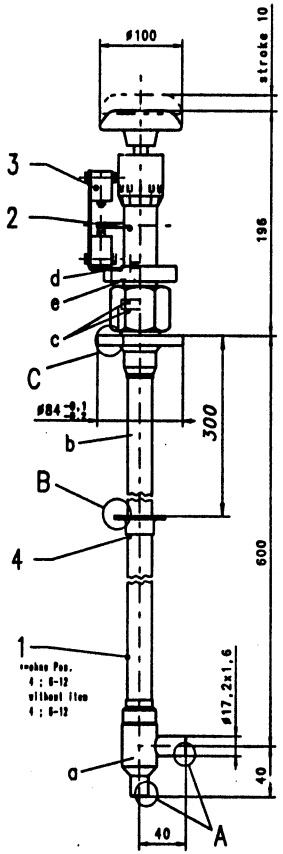

Spare item	Parts No.	description		Nos per valve
a	34659	seat seal	PTFE	1
b	35052/600	inset	1.4435	1
c	80473	O-Ring ø21,89x2,62	NBR 70	2
d	80147	O-Ring ø17,12x2,62	NBR 70	1
e	82209	gasket ø9/4,3x0,8	Cu	1

-testing, finish and documentation acc.
'Standard Delivery for Cryogenic Valve' dated 11.04.95

item No.	item 6
Tag - No.	MV 1
project	BABAR Cryogenic valve
Order-No.	BC 190548
fabrication-No.	C-132774
k_v executed	2,8 =%
trim-No.	34644
weight tot.	90 N
WEKA - type	H-TEV DN10/PN25 D-man, h= 600, ø34, 316L

Pos.	Menge	Einh.	Art.- Nr	Benennung und/oder Werkstoff		Bemerk.
4	1.00	St	35053	Thermalizing collar	Cu-ETP1	
3	1.00	St	30083	limit-switches-set incl. 2ofr-LS	–	
2	1.00	St	29803	Man. handwheel	1.4435	
1	1.00	St	35057/600	TEV DN10 / PN25 ø84	1.4435	

Änd. | Änd. | Ersatz für: | Desneme: KXK31RUA | A/N Key:

Benennung: H-TEV DN10/PN25 D-man
Ansaldo Energia s.p.a.; I-16125 Genova

M'stab 1:1 | Gezeichn 06.12.1995 HU | Geprüft | Ohne sep. Stückl. | Sep.Stückl.gl.Nr. | Anz. Blatt | Blatt-Nr.

WEKA® Weka AG, Schärlistrasse 8 CH-8344 Bäretswil | Format 2 | Zeichnungs-Nr. 970323 | Index

970441

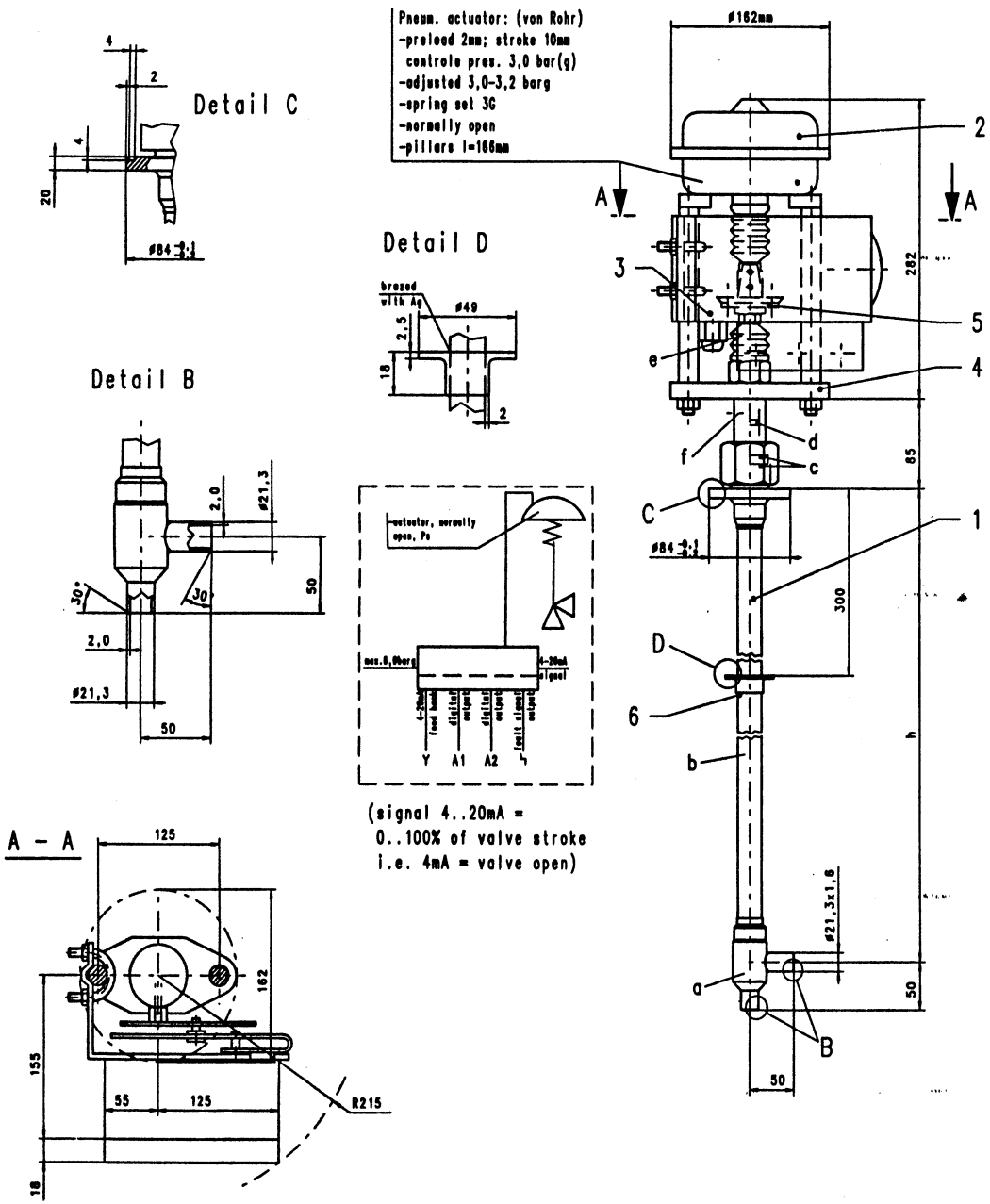

Spare item	Parts No.	description		Nos per valve CV 8
a	27982	seat seal	PTFE	1
b	30585/735	inset	316L	1
c	80473	O-Ringø21,89x2,62	NBR70	2
d	80459	O-Ringø13,95x2,62	NBR70	1
e	29576	rubber bellows		1
f	82209	gasket ø14/10x1	Cu	1

-testing, finish and documentation acc.
'Standard Delivery for Cryogenic Valve' dated 11.04.95

item No.	item 5
Tag - No.	CV 8
project	BABAR Cryogenic valve
Order-No.	BC 190548
dim. h	735
fabrication-No.	C-132773
k_v executed	6,0 dig
trim-No.	27983
weight tot.	105 N
WEKA - type	P-TEV DN15/PN25 C-Ps, h= 735/h2= 300, ø 84, 316L

Pos.	Menge	Einh	Art.- Nr	Benennung und/oder Werkstoff		Bemerk.
6	1.00	St.	32955	Thermalizing collar	Cu-ETP1	
5	1.00	St.	81868	Coupling M12	St	
4	1.00	St.	32636	Flange ø27.5	St	
3	1.00	St.	83425	SIPART PS 6DR 3100-1N/Rückm. ±	St	
2	1.00	St.	83452	Pneu. actuator MA3.16A6 3k Ps9	-	
1	1.00	St.	32994/735	TEV DN15 / PN25 ø84	316L	

Änd. a 22.05.1997 HU

Ersatz für: Dosname: KXK4MQNW

A/N Key:

Benennung: P-TEV DN15/PN25 C-Ps

Ansaldo Energia s.p.a.; I-16125 Genova

M'stab 1:1

Gezeichn 22.04.1997 HU

Geprüft

Ohne sep. Stückl. Sep.Stückl.gl.Nr.

Anz. Blatt Blatt-Nr.

WEKA Weka AG, Schärlistrasse 8 CH-8344 Bäretswil

Format 2

Zeichnungs-Nr. 970441

Index a

SIEMENS-VALVE POSITIONER

Automatic Commissioning

Initialization (Init)

Select from
"P - manual mode" or
"manual mode" level

1. Move actuator to approximately half way along its stroke .....
2. Select level Configuring .....
3. Select Init .....
4. Select calibration level .....
5. Start initialization .....

   | Commissioning run1 to run5 in progress |

6. Return to menu level .....
7. Switch to Manual/Automatic mode .....

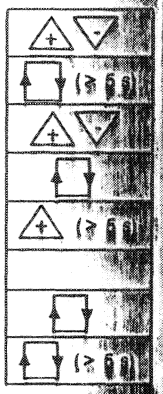

Note: In the menu level, the display alternates between menu line and value (calibration level). (Display flashes).

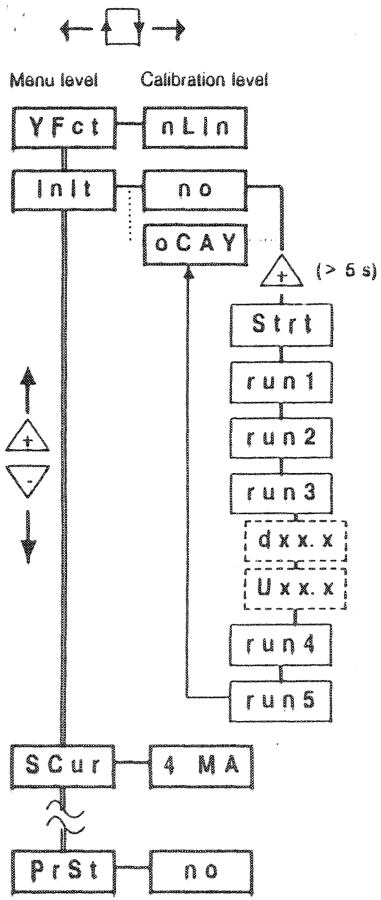

Init steps

run1
determine direction of action

run2
Check actuator stroke and set zero point and stroke (end - end)

run3
Determine positioning time
Display positioning time
down (dxx.x)
up (Uxx.x)
Modify positioning time if necessary using restrictor (7/8), interrupt and restart program by pressing key

run4
Determine length of positional increment (grain)

run5
Optimise transient response

oCAY
End of initialization

If the program aborts without a message, refer to "Manual intervention during automatic commissioning"

Manual intervention during automatic commissioning

SIPART PS for linear actuators : Intervention only required occasionally
SIPART PS for rotary actuators : Intervention always required with run2 !
Automatic commissioning is interrupted.
- check display (see table)
- correct/calibrate (see table)
- resume commissioning;
  restart automatic procedure if necessary.

Init - stage	Display	Cause o Remedy
run1	[illegible]	**End positions not reached** o Check restrictor (7/8) and open if necessary
run2	[illegible]	**"zero" tolerance band (2) violated** o Correct stroke using adjustable clutch (3). (use a suitable screwdriver; check display) o Part-turn actuators: – Press + to resume commissioning o linear actuators: – Press - to quit calibration o Press - to quit calibration o Position contact lever on centre mark (4) using + - keys. o Press to resume commissioning
	[illegible]	**"span" tolerance band (5) violated** o Correct stroke using adjustable clutch (3). (use a suitable screwdriver; check display) o Press - to quit calibration – Position contact lever on centre mark (4) – Press to resume commissioning o Position contact lever on centre mark (4) using + - keys. o Press to resume commissioning
	[illegible]	**Stroke "zero" tolerance band violated** o Press to quit calibration P - manual mode o Adjust mounting if necessary - adjust driver pin on contact lever for shorter stroke o Restart automatic commissioning
	[illegible]	**Stroke "span" tolerance band violated** o Press to quit calibration P - manual mode o Adjust mounting if necessary - adjust driver pin on contact lever for longer stroke o Restart automatic commissioning

Positioner is in P-manual mode.
Restart automatic commissioning procedure.

The safety instructions in the Operating Manual must be observed.

SIEMENS AG
D-13623 Berlin

AG 0795 3.0 WI en
AUT 34 PM

SIEMENS

SIPART PS

Electropneumatic Positioner

for linear actuators 6DR3000 - 1N/E
- 2N/E

for part-turn actuators 6DR3001 - 1N/E
- 2N/E

BABAR

Configuring-
Quick and Easy

C73000-B7476-C139-2

Subject to change without notice

Controls and displays

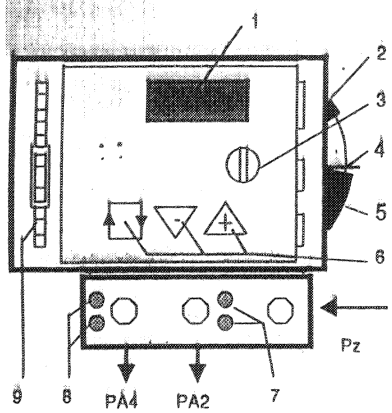

1 display
2 "zero" tolerance band
3 adjustable clutch
4 centre mark
5 "span" tolerance band
6 operating keys
7 restrictors 2 and 3 for PA2
restrictors 2: positioning pressure
restrictors 3: outlet air
8 restrictors 4 and 5 for PA4
restrictors 4: positioning pressure
restrictors 5: outlet air
9 terminal block
Pz terminal 1: inletair
PA2 terminal 2: positioning pressure
PA4 terminal 4: positioning pressure
(for double acting positioners only)
SIPART PS : cover open

Air capacity: min max

Note:
- Determine a positioning time of ≥ 2 s for small actuators.
- Do not use excessive force when turning the restrictors.

Levels (operating level)

Display	Level	Select key
(blank)	**Automatic mode** o Normal mode	from **Manual mode**
x x x. x	**Manual mode** o Valve position displayed (in %) o Set valve position using + - keys	from **Automatic mode** > 5 s from **Configuring mode**
P x x. x	**P - manual mode** o SIPART PS still has factory settings, automatic commissioning not yet performed o Displays potentiometer setting P (in %) (stroke/turning area of actuator) o Set valve position using + - keys	o **Initial commissioning:** P - manual mode enabled o **Already configured instrument:** Reset to factory settings by entering Configuring mode and setting PrSt = oCAY .
YFct / Init / PrSt	**Configuring** o Automatic commissioning (initialization = Init). o Modify other parameters/functions if required *(display changes !)*	> 5 s from **Manual mode** > 5 s from **P - manual mode**

Configuring (Menu level and calibration levels)

1. Selecting **Configuring** level ..... (> 5 s)
2. Select menu line .....
3. Select calibration level .....
4. Select function/set value .....
5. Return to menu level .....
6. Calibrate other parameters if required (2 to 5)
7. Switch to Manual/Automatic mode ..... (> 5 s)

Note: In the menu level, the display alternates between menu line and function/valve (calibration level. (Display flashes).

Menu level	Calibration level	Functions / Value limits	Eng. Unit
YFct	nLin	Lin / nLin	-
Init	no	no/oCAY / Stri	-
SCur	4MA	0 MA / 4 MA	-
Sdir	riSE	riSE / FALL	-
SPrA	0.0	0.0 to 100.0	%
SPrE	100	0.0 to 100.0	%
tS	0	AUto / 1 to 40	s
SFct	Lin	Lin	1 : 25
SL 0	0.0		
SL 10	100	0.0 to 100	%
dEbA	AUto	AUto / 0.1 to 10	%
Ydir	riSE	riSE / FALL	-
YnrM	MPoS	MPoS / FLoW	-
YA	0.0	0.0 to 100	%
YE	100	0.0 to 100	%
YCLS	no	YES / no	%
AFct	oFF	oFF / Mi:MA / Mi:Mi / MA:MA	-
A1	10.0	0.0 to 100	%
A2	90.0	0.0 to 100	%
LFct	L	L / L.H.C	-
PrSt	oCAY	no/oCAY / Stri	-

Description of menu lines / specific instrument settings

Menu line	Description Function / Application	Factory setting	Specific inst. settl
YFct	position pick-up Lin : for part-turn actuators nLin : for linear actuators	nLin	
Init	Automatic commissioning no : SIPART PS set to factory settings oCAY : Already commissioned	no	
SCur	Setpoint signal/input range 0 MA : 0 to 20 mA 4 MA : 4 to 20 mA	4 MA	
Sdir	Setpoint direction (direction of action of stroke) riSE : rising FALL : falling	riSE	RISE
SPrA	Split range - start of scale	0.0	
SPrE	Split range - full scale	100	
tS	Setpoint ramp (delay)	0	
SFct	Operating characteristic (setpoint function) Lin : linear 1 : 25 , 1 : 50 : equal percentage FrEE : free choice characteristic	Lin	
	Free choice characteristic	Stroke/%	
SL 0	Vertex at 0 % of setpoint	0	
SL 1	" 10 % "	28.5	
SL 2	" 20 % "	50.0	
SL 3	" 30 % "	62.6	
SL 4	" 40 % "	71.5	
SL 5	" 50 % "	78.5	
SL 6	" 60 % "	84.1	
SL 7	" 70 % "	88.9	
SL 8	" 80 % "	93.1	
SL 9	" 90 % "	96.7	
SL 10	" 100 % "	100	
dEbA	Dead zone / response threshold AUto : set automatically 0.1 bis 10 : set manually	AUto	
Ydir	Valve position feedback signal (option) riSE : rising direction of action FALL : falling direction of action		riSE
YnrM	Scalling of feedback signal (option) MPoS : in % (end stop - end stop) FloW : in % (YA - YE)	MPoS	
YA	Start of stroke	0.0	
YE	End of stroke	100.0	
YCLS	Tight shutt-off for valve YES : enable no : disable	no	YES
AFct	Type of alarm A1 : A2 (option) oFF : no alarm Mi : MA : A1 = Min ; A2 = Max Mi : Mi : A1 = Min ; A2 = Min MA : MA : A1 = Max ; A2 = Max	oFF	MIMA
A1	Alarm 1 (option) :limit value in %	10.0	3
A2	Alarm 2 (option) :limit value in %	90.0	97
L Fct	Alarm output (option) L : controller fault L .H.C : controller fault, manual, config.	L	L HC
PrSt	Restore factory settings (preset) no : already commissioned oCAY : SIPART PS set to factory settings	oCAY	

Weitergabe sowie Vervielfältigung dieser Unterlage, Verwertung und Mitteilung ihres Inhalts sind nicht gestattet, soweit nicht ausdrücklich zugestanden. Zuwiderhandlungen verpflichten zu Schadenersatz. Alle Rechte für den Fall der Patenterteilung oder GM-Eintragung vorbehalten.

Technische Änderungen vorbehalten.

Copying of this document and giving it to others and the use or communication of the contents thereof, are forbidden without express authority. Offenders are liable to the payment of damages. All rights are reserved in the event of the grant of a patent or the registration of a utility model or design.

Subject to technical alternation.

© Siemens AG 1993

Siemens AG
Bereich Automatisierungstechnik
Geschäftsgebiet Meß-, Prüf- und Prozeßtechnik
AUT 34 PM
D-76181 Karlsruhe

Siemens Aktiengesellschaft

© Siemens AG 1993. All rights reserved

Bestell-Nr./Order No.
C73000-M7474-C33-3
Bestellort/Available from: MWB
Printed in the Federal Republic of Germany

Progress
in Automation.
Siemens

SIEMENS

SIPART PS® 6DR3*00-1N/E, -2N/E

Elektropneumatischer Stellungsregler für Schubantriebe
Optionsbaugruppe 6DR3*04-8N/E

Electropneumatic positioner for linear actuators
Option module 6DR3*04-8N/E

Montage- und Installationshinweise
Assembly and Installation Instructions

Bestell-Nr.:
Order no.: C73000-M7474-C33-3

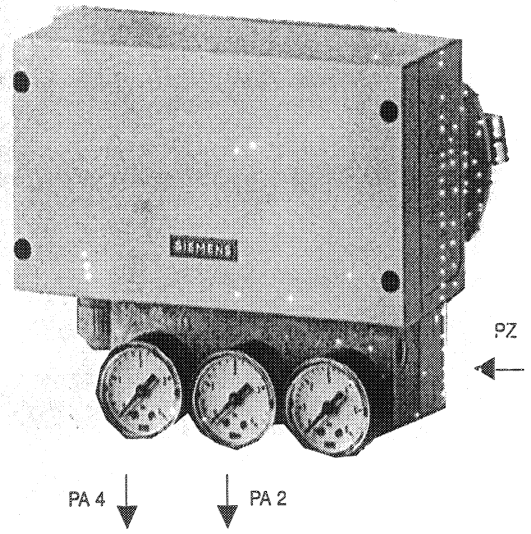

PZ Anschluß 1: Zuluft
Terminal 1: Supply air

PA 2 Anschluß 2: Stelldruck
Terminal 2: Positioning pressure

PA 4 Anschluß 4: Stelldruck
Terminal 4: Positioning pressure

Bild/Fig. 1

Inhalt

		Seite
1	Sicherheitstechnische Hinweise	2
2	Lieferumfang	3
3	Montageablauf – Allgemeines	3
4	Mechanischer Anbau	4
5	Elektrischer Anschluß	4
6	Pneumatischer Anschluß	5
7	Inbetriebnahme (siehe auch SIPART PS "Konfigurieren – kurz und bündig")	5
8	Konformitätsbescheinigung	10
9	Bilder	13

1 Sicherheitstechnische Hinweise

Die Montage– und Installationshinweise ersetzen nicht die Bedienungsanleitung für den Elektropneumatischen Stellungsregler für Schubantriebe 6DR3*00–1N/E und 6DR3*00–2N/E.

Die Bedienungsanleitung kann unter

Bestell–Nr.
C73000–B7464–C136
(deutsch, englisch, französisch, spanisch, italienisch)

über

eine unserer Siemens–Niederlassungen

bezogen werden.

Warnung

Das Gerät darf nur von qualifiziertem Personal montiert und in Betrieb genommen werden.
Die elektrische Sicherheit wird allein durch die speisenden Geräte bestimmt.
Von pneumatischen Antrieben werden große Stellkräfte aufgebracht. Um Verletzungen zu vermeiden, sind Montage und Inbetriebnahme unter sorgfältiger Beobachtung von Sicherheitsvorschriften vorzunehmen. Auf die ggf. notwendige Beachtung von Sicherheitsvorschriften für explosiongefährdete Anlagen wird hiermit ausdrücklich hingewiesen.

Qualifiziertes Personal

im Sinne dieser Betriebsanleitung sind Personen, die mit Montage, Inbetriebnahme und Betrieb dieses Produktes vertraut sind.
Folgende Qualifikationen werden vorausgesetzt:

- Ausbildung oder Unterweisung bzw. Berechtigung, Stromkreise und Geräte bzw. Systeme gemäß den aktuellen Standards der Sicherheitstechnik ein– und auszuschalten, zu erden und zu kennzeichnen.
- Ausbildung oder Unterweisung gemäß den aktuellen Standards der Sicherheitstechnik in Pflege und Gebrauch angemessener Sicherheitsausrüstungen.
- Schulung in Erster Hilfe.
- Bei Geräten mit Explosionsschutz: Ausbildung oder Unterweisung bzw. Berechtigung, Arbeiten an elektrischen Kreisen explosionsgefährdeter Anlagen durchzuführen.

2 Lieferumfang

Im *Lieferumfang Stellungsregler* sind enthalten:

- Stellungsregler entsprechend der Bestellung
- Montage– und Installationshinweise
- Konfigurieren – kurz und bündig

Im *Lieferumfang Anbausatz* sind enthalten: (Lfd. Nr. siehe Bild 2)

Lfd. Nr	Stück	Benennung	Hinweis
1	1	Befestigungswinkel	Für Anbau an Antriebe nach Namur mit Rippe, Säulen oder ebener Fläche.
2	1	Mitnehmerstift	Montage an Hebelarm (5 oder 7)
3	1	Führungsschiene	Montage an der Kupplung des Antriebes.
4	1	Distanzstück	Montage an der Kupplung des Antriebes.
5	1	Hebelarm	Für Hubbereich 40 mm bis 110 mm.
6	1	Feder	Führt den Mitnehmerstift (2) auf der Führungsschiene (3).
7	1	Hebelarm	Für Hubbereich 10 bis 50 mm.
8	2	U–Bolzen	Nur für Antriebe mit Säulen.
– –			
14	1	Zylinderschraube	DIN 912 – M8 x 30
15	2	Zylinderschraube	DIN 912 – M6 x 16
16	2	Zylinderschraube	DIN 912 – M5 x 12
17	5	Sechskantschraube	DIN 933 – M8 x 16
18	2	Scheibe	DIN 433 – 8,4
19	1	Scheibe	DIN 433 – 6,4
20	1	Sechskantmutter	DIN 439 – 8M6
21	5	Sechskantmutter	DIN 934 – M8
22	1	Vierkantmutter	DIN 557 – M8
23	12	Federring	DIN 127 – A8
24	2	Federring	DIN 127 – A5
25	2	Scheibe	DIN 433 – 5,4
26	2	Sicherungsscheibe	S6
27	5	Sechskantschraube	DIN 933 – M8 x 25

Im *Lieferumfang Optionsbaugruppe* sind enthalten:

- Optionsbaugruppe entsprechend der Bestellung
- zwei Scharniere mit Schrauben

3 Montageablauf – Allgemeines

Warnung

Zur Vermeidung von Verletzungen oder einer mechanischen Beschädigung am Stellungsregler/Anbausatz ist bei Montage unbedingt folgende Reihenfolge zu beachten:

☞ Stellungsregler mechanisch anbauen.	Siehe Kapitel 4
☞ elektrische Hilfsenergie anschließen.	Siehe Kapitel 5
☞ Funktionsgruppe **P–Handbetrieb** aufrufen. (Werkseinstellung: **PrSt = oCAY**)	Konfigurieren kurz und bündig
☞ Pneumatische Hilfsenergie anschließen	Siehe Kapitel 6
☞ Inbetriebnahme durchführen	Siehe Kapitel 7

V9 BABAR

CIRCLE SEAL CONTROLS INC.

MFG. P/N K22071 - 4PP QTY. 1E4
CUSTOMER P/N -- REV. --
SERIAL NO. 310213
CONTRACT NO. --
CUST. P.O. NO. S 4167
CLEANED PER CS.1CCD 29.10 Lev.B Rev.F
PACKAGED PER SAME
PARTICLE SIZE -- MAX. MVR -- MG MAX.
CURE DATE -- INSP. 198 DATE 10-22-93
OTHER:

CAUTION:
CA
1-2448R (4/93)

THIS UNIT HAS BEEN SPECIALLY CLEANED AND PACKAGED.
DO NOT OPEN IN UNCONTROLLED AREA.
CUT - DO NOT TEAR BAG.

1-2448R (4/93)

4 Mechanischer Anbau

Warnung

Aus Sicherheitsgründen ist während der Montage des Stellungsreglers zu beachten:
- Antrieb nicht mit Prozeßmedium beaufschlagen
- Zuluft (Hilfsenergie) abschalten

Ablauf (siehe Bilder 2 und 4)

☞ Distanzstück (4) mit Zylinderschrauben (15) und Sicherungsscheiben (26) an Kupplung der Antriebsspindel montieren. (Freie Gewindebohrungen nach unten.)

☞ Feder (6) in Führungsschiene (3) einsetzen

☞ Führungsschiene (3) mit Zylinderschrauben (16), Federring (24) und Scheibe (25) rechtwinklig zur Antriebsspindel auf Distanzstück (4) montieren.

Achtung: Abstand Führungsschiene – Befestigungswinkel (Maß X, Bild 2) sollte nach abgeschlossener Montage möglichst klein sein.

☞
- Hebelarm (5 oder 7) entsprechend dem Hubbereich des Antriebs auswählen.
- Mitnehmerstift (2) mit Scheibe (19) und Sechskantmutter (20) auf Hebelarm montieren. Hilfsskale für Hubbereich beachten. (= Grobeinstellung Hubbereich)

☞ Befestigungswinkel (1) mit vier Sechskantschrauben (17) und Federring (23) auf Rückseite des Stellungsreglers montieren.

Vormontierten Hebelarm bis Anschlag auf Stellungsreglerachse schieben und mit Zylinderschraube (14), Scheibe (18), Federring (23) und Vierkantmutter (22) festklemmen.
Achtung: formschlüssige Verbindung Stellungsreglerachse – Hebelarm beachten!

☞
- Montageteile bereitlegen entsprechend der Antriebsart.
  - *Antrieb mit Rippe:* Sechskantschraube (27), Scheibe (18) und Federring (23).
  - *Antrieb mit ebener Fläche:* Vier Sechskantschrauben (27), Scheibe (18) und Federring (23).
  - *Antrieb mit Säulen:* Zwei U–Bolzen (8), vier Sechskantmuttern (21) mit Federring (23).
- Stellungsregler mit Befestigungswinkel so an Antrieb halten, daß der Mitnehmerstift (2) zwischen Oberkante Führungsschiene (3) und Feder (6) geführt wird.
- Stellungsregler mit zuvor bereitgelegten Montageteilen an der Laterne befestigen.

Achtung: Sofern möglich, ist der Stellungsregler in der Anbauhöhe so zu justieren, daß die Mitte des Hebelarms (Schlitz) in das entsprechenden Toleranzband der Segmentskale (rechts am Stellungsregler) zu liegen kommt. (siehe Bild 3)

Toleranzband down: Für Antriebe mit Sicherheitsstellung down (Feder schließt).

Toleranzband up: Für Antriebe mit Sicherheitsstellung up (Feder öffnet) oder für federlose Antriebe.

5 Elektrischer Anschluß (siehe Bilder 6 und 7)

Warnung

Bei der elektrischen Installation sind die geltenden Vorschriften zu beachten. Bei der elektrischen Installation und Inbetriebnahme von explosionsgeschützten Betriebsmitteln sind zusätzlich die Angaben der Konformitätsbescheinigung und die jeweiligen Landesvorschriften für die Errichtung elektrischer Anlagen in explosionsgefährdeten Bereichen zu berücksichtigen.
Die elektrische Sicherheit wird alleine durch die speisenden Geräte bestimmt, da der Stellungsregler auch intern nur Kleinspannungen zum Betrieb benutzt.

Grundgerät

Elektrischer Anschluß:	Schraubklemmen	
Kabeldurchführung:	PG 13	
Signalbereich w.	4 bis 20 mA	bei 2–Leiteranschluß benötogte Bürdenspannung $\geq$11 V
	0/4 bis 20 mA	bei 3– oder 4–Leiteranschluß Bürde 50 Ω (mit getrennter Hilfsenergie U_H: +18 V bis +35 V)

Optionsbaugruppe (Montage, siehe Bild 5)

- Deckel vom Grundgerät abnehmen. (Wird nicht mehr benötigt.)
- Optionsbaugruppe mit Scharnieren rechts am Gehäuse des Grundgeräts montieren.

  Hierzu: Vierkant (Scharnier) in Aussparung am Grundgerät/Deckel einsetzen. Schraube in Vierkant eindrehen und damit festklemmen.
- Elektrische Verbindung (Deckel – Grundgerät) herstellen. Dazu Stecker in die Stiftleiste der Leiterplatte des Grundgeräts stecken. (Kennzeichnung Option)

Elektrischer Anschluß:	Schraubklemmen (in Optionsbaugruppe)	
Kabeldurchführung:	PG 13 (in Optionsbaugruppe)	
A1, A2 und Meldeausgang:	Binärausgang, positive aktive Logik	
	Hilfsenergie L+:	$\leq$+35 V.
	Wirksinn:	High–Signal
Stellungsrückmeldung:	Stromausgang, Zweileiteranschluß	
	Hilfsenergie U_H:	+12 V bis +35 V
	Signalbereich:	4 mA bis 20 mA = 0 bis 100 % y

6 Pneumatischer Anschluß (Siehe [illegible] 1)

Warnung

Aus Sicherheitsgründen darf während der Montage die pneumatische Hilfsenergie nur dann zugeführt werden, wenn bei anliegendem elektrischen Signal der Stellungsregler in Funktionsgruppe (Bedienebene) **P–Handbetrieb** geschaltet ist. (Siehe Konfiguration – kurz und bündig)

- ☐ Ggf. Manometer für Zuluftdruck oder Stelldruck anschließen (gelbe Schutzkappen).
- ☐ Stelldruck PA 2 bzw. PA 4 entsprechend gewünschter Sicherheitsstellung anschließen.
- ☐ Zuluft an PZ anschließen. Luftqualität beachten! Nicht geölte Industrieluft, Feststoffgehalt <30 µm, Drucktaupunkt 20 k unter ϑu min.

Hinweise:
- Anschluß über Innengewinde G 1/8 DIN 45141

PZ,	Anschluß 1:	Zuluft 1,4 bis 6 bar
PA 2,	Anschuß 2:	Stelldruck für federbelastete Antriebe.
PA 4,	Anschluß 4:	Zweiter Stelldruck für federlose Antriebe.
- Sicherheitsstellung bei Ausfall der el. Hilfsenergie:

PA 2:	Entlüftet
PA 4:	Max. Stelldruck (ca. Zuluftdruck)

7 Inbetriebnahme (siehe auch SIPART PS "Konfigurieren – kurz und bündig")

- ☐ Funktionsbaugruppe **P–Handbetrieb** aufrufen
- ☐ pneumatische Hilfsenergie (Zuluft) zuschalten.
- ☐ Hubbereich vorsichtig durchfahren; freien Lauf der Mechanik prüfen.
- ☐ Automatische Inbetriebnahme starten.
- ☐ Evtl. weitere Parameter einstellen
- ☐ Funktionsgruppe **Automatikbetrieb** aufrufen – Montage und Inbetriebnahme ist abgeschlossen!

Contents

		Page
1	Safety information	6
2	Scope of supply	7
3	Installation procedure – general	7
4	Mechanical connection	8
5	Electrical connection	8
6	Pneumatic connection	9
7	Commissioning (see SIPART PS "Configuring – Quick and Easy")	9
8	Conformence certificate	10
9	Diagrams	13

1 Safety information

These Assembly and Installation Instructions do not supercede the Operating Instructions for this equipment (Electropneumatic Positioner for Linear Actuators 6DR3*00–1N/E and 6DR3*00–2N/E).

The Operating Instructions can be ordered from any Siemens Office, quoting order number

C73000–B7464–C136
(English, French, German, Italian, Spanish)

⚠ Warning

This equipment should only be installed and commissioned by qualified personnel.
The electrical safety of this equipment is determined solely by the devices providing the supply.
Pneumatic actuators generate high positioning forces. To prevent injury during installation and commissioning, safety instructions must be strictly observed. Your attention is drawn in particular to the safety instructions relating to hazardous areas.

Qualified person

For the purposes of this manual, a qualified person is one who is familiar with the installation, commissioning and operation of this equipment.
In addition, the person must be:

- Trained and authorised to energise, de–energise, ground and tag electrical circuits and equipment/systems in accordance with established safety practices.
- Trained in the proper care and use of protective equipment in accordance with established safety practices.
- Trained in rendering first aid.
- In the case of intrinsically safe equipment: trained and authorised to carry out work on electrical systems for hazardous areas.

2 Scope of supply

The *scope of supply of the Positioner* includes:

- Positioner as ordered
- Assembly and Installation Instructions
- Configuring – Quick and Easy

The *scope of supply of the Assembly kit* includes: (for item no., see Figure 2)

Item no.	Quantity	Description	Comments
1	1	Mounting bracket	Fixed to actuator yoke with rib, flat surface or bar–type yoke to Namur specifications
2	1	Contact pin	Fitted to lever arm (5 or 7)
3	1	Guide rail	Fitted to actuator coupler
4	1	Spacer	Fitted to actuator coupler
5	1	Lever arm	For stroke 40 mm to 110 mm.
6	1	Spring	Guides the contact pin (2) onto the rail (3)
7	1	Lever arm	For stroke of 10 to 50 mm.
8	2	U–bolts	For bar–type actuator yokes only
– –			
14	1	Cheese–head screw	DIN 912 – M8 x 30
15	2	Cheese–head screw	DIN 912 – M6 x 16
16	2	Cheese–head screw	DIN 912 – M5 x 12
17	5	Hexagon head screw	DIN 933 – M8 x 16
18	2	Washer	DIN 433 – 8.4
19	1	Washer	DIN 433 – 6.4
20	1	Hexagonal nut	DIN 439 – 8M6
21	5	Hexagonal nut	DIN 934 – M8
22	1	Square nut	DIN 557 – M8
23	12	Spring washer	DIN 127 – A8
24	2	Spring washer	DIN 127 – A5
25	2	Washer	DIN 433 – 5.4
26	2	Locking washer	S6
27	5	Hexagon head screw	DIN 933 – M8 x 25

The *scope of supply of the Option module* includes:

- Option module as ordered
- Two hinges with screws

3 Installation procedure – general

⚠ Warning

The following installation procedure must be observed to prevent personal injury or damage to the positioner/mounting kit:

☞ Connect positioner mechanically	see Chapter 4
☞ Connect auxiliary power	see Chapter 5
☞ Select **P–Manual function** (factory setting: **PrSt = oCAY**)	Configuring Quick and Easy
☞ Connect pneumatic power	see Chapter 6
☞ Commissioning	see Chapter 7

4 Mechanical connection

Warning

For safety reasons, observe the following while installing the positioner:
- make sure there is no process medium in the valve actuator assembly
- turn off supply air

Assembly procedure (see Figure 2 and 4)

☞ Fit the spacer (4) onto the coupler on the actuator spindle using the cheese–head screws (15) and locking washers (26). The excess thread should be pointing down.

☞ Insert the spring (6) into the guide rail (3).

☞ Fit the guide rail (3) to the spacer (4) at right–angles to the actuator spindle using the cheese–head screws (16), spring washer (24) and washer (25).

Note: The final distance between the guide rail and the mounting bracket (dimension X, Figure 2) should be as small as possible.

☞
- select lever arm (5 or 7) corresponding to stroke of actuator.
- fit contact pin (2) to lever arm using washer (19) and hexagonal nut (20).
  Note stroke scale (for rough setting of stroke).

☞ Fit the mounting bracket (1) to the back of the positioner using four hexagon head screws (17) and spring washers (23).

Push the lever arm assembly onto the spindle of the positioner until it clicks into place; secure using the cheese–head screw (14), washer (18), spring washer (23) and square nut (22).
Note: make sure there is a snug fit between the spindle of the positioner and the lever arm.

☞
- Assemble mounting components according to type of actuator:
  - *yoke with rib:* hexagon head screw (27), washer (18) and spring washer (23)
  - *yoke with flat surface:* four hexagon head screws (27), washer (18) and spring washer (23)
  - *bar–type yoke:* two U–bolts (8), four hexagonal nuts (21) and spring washer (23)
- Hold the positioner/mounting bracket assembly so that the contact pin (2) can move between the top edge of the guide rail (3) and the spring (6).
- Fasten positioner to yoke using appropriate mounting components.

Note: Adjust the height of the positioner as for as possible so that the slot in the centre of the lever arm is at the corresponding tolerance band on the segment scale (on the right of the positioner, see figure 3).

Tolerance band down: For actuators with "down" safety positions (spring contacts).

Tolerance band up: For actuators with "up" safety postitions (spring expands).

5 Electrical connection (see Figure 6 and 7)

Warning

Observe the relevant regulations while carrying out the electrical installation. When installing and commissioning the equipment in a hazardous area, observe as well the data on the Conformance Certificate and the appropriate national regulations governing the installation of electrical systems in hazardous areas.
The electrical safety of this equipment is determined solely by the devices providing the supply, as the positioner itself only uses extra–low voltages.

Basic unit

Electrical connection:	screw–type terminals	
Cable inlets:		PG 13
Signal range w:	4 to 20 mA	for 2–wire systems required compliance voltage ≥11 V
	0/4 to 20 mA	for 3– or 4–wire systems load impedance 50 Ω (with separate auxiliary power supply U_H: +18 V to +35 V)

Option module (installation, see Figure 5)

- Take cover off basic unit (this cover will not be required again)
- Fix the option module to the basic unit with the hinges on the right, as follows:
  Position the hinges in the recesses in the basic unit and cover.
  Insert screws and tighten.
- Make the electrical connection between the cover and the basic unit by inserting the connector into the plug connector (labelled "Option") on the circuit board of the basic unit.

Electrical connection:	screw–type terminals (on option module)	
Cable inlets:	PG 13 (on option module)	
A1, A2 and alarm output:	digital output, positive active logic	
	auxiliary power L+:	≤+35 V.
	direction of logic:	High signal
Position feedback:	output current, 2–wire system	
	auxiliary power V_H:	+12 to +35 V
	signal range:	4 to 20 mA ≙ 0 to 100 % y

6 Pneumatic connection (See Figure 1)

Warning

For safety reasons, pneumatic power may only be applied during commissioning when an electrical signal is present and the positioner is in **P–manual mode** (see Configuration – Quick and Easy).

- ☐ If required, connect a manometer to measure supply air or positioning pressure (yellow protective covers)
- ☐ Apply positioning pressure PA2 and/or PA4 to correspond to required safety positions.
- ☐ Connect supply air to PZ. Ensure proper air quality! Non–oiled industrial air, solids content <30 µm, dew-point 20 k below ϑu min.

Notes: Connected using female thread G 1/8 DIN 45151

PZ,	Terminal 1:	Supply air, 1, 4 to 6 bar
PA 2,	Terminal 2:	Positioning pressure for spring–loaded actuators
PA 4,	Terminal 4:	Second positioning pressure for actuators without springs.

- Safety positions following power failure:
  PA 2: No pressure
  PA 4: Max. positioning pressure (approximately the same as the supply air pressure)

7 Commissioning (see SIPART PS "Configuring – Quick and Easy")

- ☐ Select **P–Manual mode**.
- ☐ Connect auxiliary power (supply air)
- ☐ Carefully "stroke" the actuator through its whole range: check that the meachanical parts are working smoothly.
- ☐ Start automatic commissioning procedure.
- ☐ Set additional parameters as required.
- ☐ Select **Automatic mode** – installation and commissioning are complete!

Physikalisch-Technische Bundesanstalt

(1) KONFORMITÄTSBESCHEINIGUNG

(2) PTB Nr. Ex-91.C.2138

(3) Diese Bescheinigung gi[illegible] Stellungsregler elektropneumati[illegible] SIPART PS Typ 6[illegible]00-*E mit Optionsmodul 6DR3004-8E

(4) der Firma S[illegible]s AG [illegible]00 Karl[illegible]

(5) Die Bau[illegible]es elek[illegible]en Betriebsmittels sowie die verschiedenen zulässigen Aus[illegible]gen sind in der A[illegible] zu dieser [illegible]ormitätsbescheinigung festgelegt.

(6) Die [illegible]alisch-Tech[illegible]e Bundesanstalt bescheinigt als Prüfstelle nach Artikel 14 de[illegible]linie de[illegible] der Europä[illegible] Gemeinschaften vom 18. Dezember 1975 (76/117/EWG) die [illegible]einstimmung dieses elektri[illegible]etriebsmittels mit den harmonisierten Europäischen Normen

Elektrische Be[illegible]mittel für explosionsgefährdete Bereiche

E[illegible]014:1977 + [illegible]A5 (VDE 0170/0171 Te[illegible]) Allgemeine Besti[illegible]gen
EN [illegible]20:1977 + [illegible].A2 (VDE 0170/0171 Tei[illegible]) Eigensicherhei[illegible]

nachdem [illegible]triebem[illegible]gt Erfolg einer Bauartprüf[illegible]wurde. Die E[illegible]sse dieser Bauartprüfu[illegible] in einem [illegible]protokoll [illegible]gt.

(7) Das Betriebsm[illegible] mit dem fo[illegible]ennzeichen versehen:

EEx ib IIC T6

(8) Der Hersteller ist daf[illegible]ntwortlich, daß jedes derart gekennzeichnete Be[illegible]mittel in seiner Bauart mit den in der Anlage [illegible]gen übereinstimmt und daß die vorgeschriebene[illegible]

(9) Das elektrische Betriebsmittel darf mit dem hier abgedruckten gemeinschaftlichen Unterscheidungszeichen gemäß Anhang II der Richtlinie des Rates vom 6. Februar 1979 (79/196/EWG) gekennzeichnet werden.

Im Auftrag

Dr.-Ing. Schebs[illegible]
Regierungsdirektor

Braunschweig, 21.01.1992

Prüfbescheinigungen ohne Unterschrift und ohne Dienststempel haben keine Gültigkeit.
Die Bescheinigungen dürfen nur unverändert weiterverbreitet werden.
Auszüge oder Änderungen bedürfen der Genehmigung der Physikalisch-Technischen Bundesanstalt Bundesallee 100 Postfach 33 45, D-3300 Braunschweig

V 15 - 320/037 12 85

8 13-753 329 17-9.88

Physikalisch-Technische Bundesanstalt

A N L A G E

zur Konformitätsbescheinigung PTB Nr. Ex-91.C.2138

Der elektropneumatische Stellungsregler SIPART PS dient als Kopplungsbaugruppe zwischen elektrischen Reglern und pneumatischen Stellantrieben.

Die höchstzulässige Umgebungstemperatur in Abhängigkeit von der Temperaturklasse ist der folgenden Tabelle zu entnehmen:

Temperaturklasse	Umgebungstemperatur
T6	50°C
T5	65°C
T4	80°C

Elektrische Daten

SIPART PS Grundgerät in 2L-Schaltung

Hilfsenergie-/Steuerstromkreis ..... (Klemmen 3, 7)
in Zündschutzart Eigensicherheit EEx ib IIC nur zum Anschluß an bescheinigte eigensichere Stromkreise mit folgenden Höchstwerten:
U_o = 30 V
I_k = 100 mA
P = 1 W
Die innere Induktivität und Kapazität sind vernachlässigbar klein.

SIPART PS Grundgerät in 3/4L-Schaltung

Hilfsenergiestromkreis .. (Klemmen 1,2 und 4,5)
in Zündschutzart Eigensicherheit EEx ib IIC nur zum Anschluß an bescheinigte eigensichere Stromkreise mit folgenden Höchstwerten:
U_o = 30 V
I_k = 100 mA
P = 1 W
Die innere Induktivität und Kapazität sind vernachlässigbar klein.

Steuerstromkreis ..... (Klemmen 6 und 7,8)
in Zündschutzart Eigensicherheit EEx ib IIC nur zum Anschluß an bescheinigte eigensichere Stromkreise mit folgenden Höchstwerten:
U_o = 30 V
I_k = 100 mA
P = 1 W
Die innere Induktivität und Kapazität sind vernachlässigbar klein

Blatt 1/2

Physikalisch-Technische Bundesanstalt

Anlage zur Konformitätsbescheinigung PTB Nr. Ex-91.C.2138

SIPART PS Option

Hilfsenergie-/Eingangssignalstromkreise ..... (Steckverbinder)
in Zündschutzart Eigensicherheit EEx ib IIC nur zum Anschluß an zugehöriges Grundgerät Typ 6DR3000-*E

Analogausgangssignalstromkreis ..... (Klemmen 1, 2, 3)
in Zündschutzart Eigensicherheit EEx ib IIC nur zum Anschluß an bescheinigte eigensichere Stromkreise mit folgenden Höchstwerten:
U_o = 30 V
I_k = 100 mA
P = 1 W
Die innere Induktivität beträgt 1 mH
Die innere Kapazität beträgt 6 nF

Binärausgangsstromkreise (Klemmen 4, 5, 6; 7, 8, 9; 10, 11, 12)
in Zündschutzart Eigensicherheit EEx ib IIC nur zum Anschluß an bescheinigte eigensichere Stromkreise mit folgendem Höchstwert je Stromkreis:
U_o = 30 V
Die innere Induktivität und Kapazität aller drei Stromkreise sind vernachlässigbar klein.

Beim SIPART PS Grundgerät in 3L-Schaltung sind der Hilfsenergie- und Steuerstromkreis galvanisch verbunden.

Beim SIPART PS Grundgerät in 4L-Schaltung sind der Hilfsenergie- und Steuerstromkreis galvanisch getrennt.

Bei der SIPART PS Option sind die einzelnen Ausgangsstromkreise untereinander und von den Steuerstromkreisen des Grundgerätes galvanisch getrennt.

Prüfungsunterlagen sind unterschrieben

1. Beschreibung (14 Blatt)
2. Zeichnung Nr.: C73451-A330-X101-*-26 (11 Blatt)
   C73451-A330-X100-*-26 (8 Blatt)

Im Auftrag

Dr.-Ing. Sche[illegible]
Regierungsdirek[illegible]

Braunschweig, 21.01.1992

Blatt 2/2

8 13-753 329 17-9.88

Physikalisch-Technische Bundesanstalt

1. N A C H T R A G

zur Konformitätsbescheinigung PTB Nr. Ex-91.C.2138

der Firma Siemens AG
D-7500 Karlsruhe

Der elektropneumatische Stellungsregler SIPART PS mit Optionsmodul darf künftig auch mit den Änderungen entsprechend den unten aufgeführten Prüfungsunterlagen gefertigt werden.

Die Änderungen betreffen den inneren und äußeren Aufbau sowie die Typenbezeichnung.

Die Typenbezeichnung lautet künftig 6DR300*-*E.

Die elektrischen Daten bleiben unverändert.

Prüfungsunterlagen

Beschreibung (2 Blatt) unterschrieben am 02.03.1992

Im Auftrag

Dr.-Ing. Schebs[illegible]
Regierungsdirektor

Braunschweig, 30.04.1992

EEx ib IIC T6

Blatt 1/1

8 13-753 329 17-9.88

9. Bilder/Diagrams

a) Befestigung der Montageplatte an Laterne mit Rippe/ Fixing mounting plate to yoke with rib

b) Befestigung der Montageplatte an Laterne mit ebener Fläche/ Fixing mounting plate to yoke with flat surface

c) Befestigung der Montageplatte an Laterne mit Säule (Durchm. 20 mm bis 35 mm)/ Fixing mounting plate to bar–type yoke (diameter 20 mm to 35 mm)

X Abstand Führungsschiene – Befestigungswinkel möglichst klein (ca. 2 – 5 mm)/ Distance between guide rail and mounting bracket as small as possible (approx. 2 – 5 mm)

Bild 2 Montage Anbauteile und Stellungsregler
Figure 2 Assembly of mounting components and positioner

3.1 Hubbereich/ stroke

3.2 Mitnehmerstift/ contact pin

3.3 Hebelarm/ Lever arm

Bild 3 Toleranzband down und up auf der Segmentskale am Stellungsregler/
Figure 3 Up and down tolerance band on positioner scale

Physikalisch-Technische Bundesanstalt

2. NACHTRAG
zur Konformitätsbescheinigung PTB Nr. Ex-91.C.2118

der Firma Siemens AG
D-Karlsruhe

Der elektropneumatische Stellungsregler SIPART PS mit Optionsmodul 6DR3300-.-E darf künftig auch nach den unten aufgeführten Prüfungsunterlagen geliefert werden.
Die Änderungen betreffen den inneren Aufbau des Gerätes. Die "Elektrischen Daten" bleiben unverändert.

Die Typenbezeichnung für diese geänderte Ausführung lautet:
6DR3[0]-.-E (SIPART PS) bzw. 6DR3[0]-.-E (Optionsmodul)

Prüfungsunterlagen — unterschieden am

1. Beschreibung (3 Blatt) — 29.11.1993 und 28.02.1994

2. Zeichnung Nr.

C73451-A330-X111-.-26, Bl. 0	28.02.1994
C73451-A330-X111-.-26, Bl. 1+	29.11.1993
C73451-A330-X111-.-26, Bl. 2+	28.02.1994
C73451-A330-X111-.-26, Bl. 3+	29.11.1993
C73451-A330-X111-.-26, Bl. 4+	29.11.1993
C73451-A330-X111-.-26, Bl. 5+	28.02.1994
C73451-A330-X111-.-26, Bl. 6+	28.02.1994
C73451-A330-X111-.-26, Bl. 7+ bis Bl. 12+	29.11.1993
C73451-A330-X110-.-26, Bl. 0+ bis Bl. 8+	29.11.1993

Im Auftrag

Dr.-Ing. Johannsmeyer
Oberregierungsrat

Braunschweig, 16.05.1994

EEx ib IIC T6

Blatt 1/1

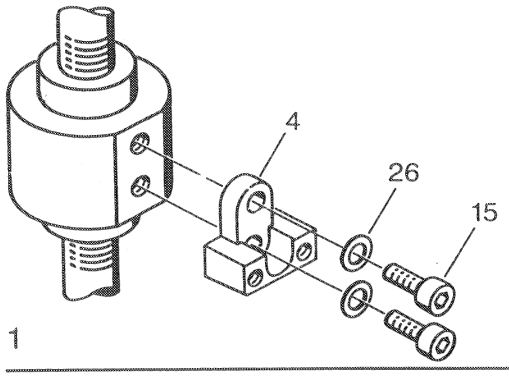

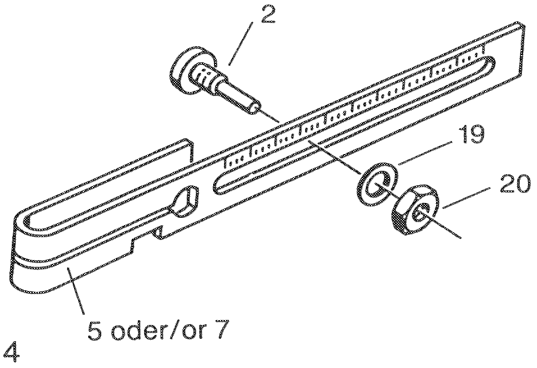

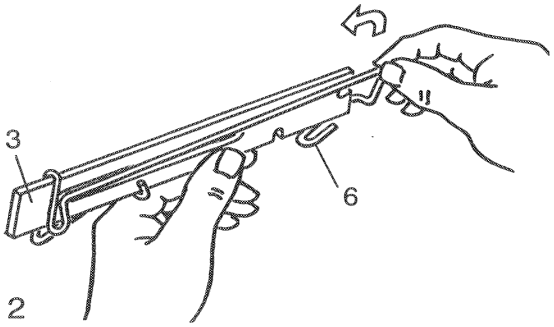

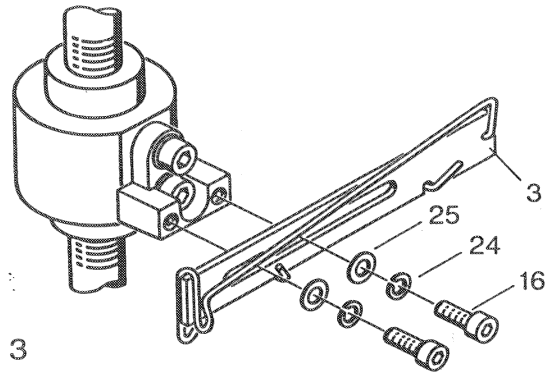

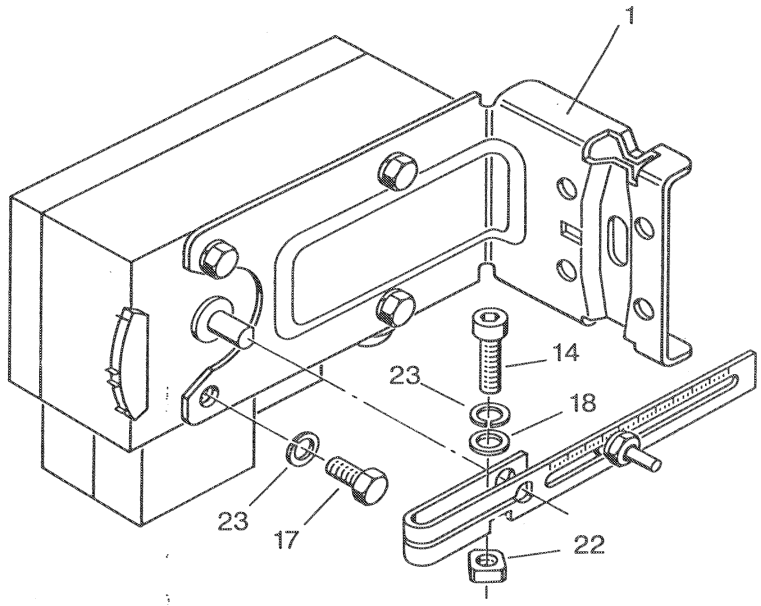

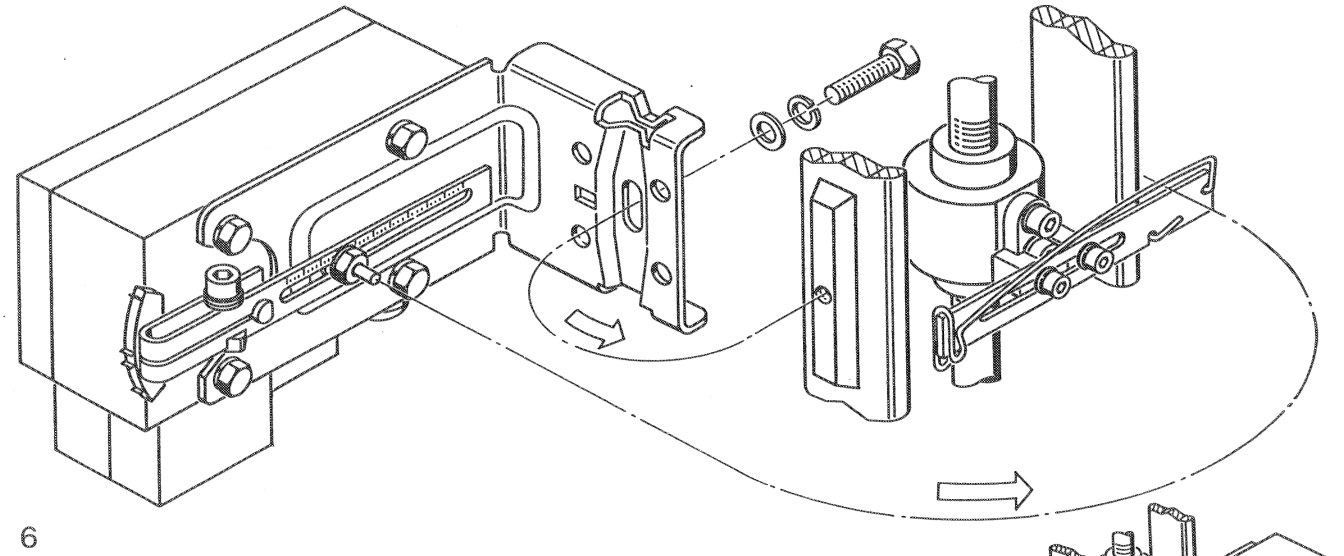

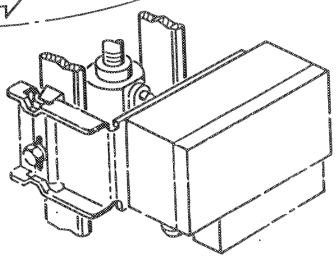

Bild 4 Mechanischer Anbau – Ablauf, siehe Kap. 4
Figure 4 Mechanical connection (see Chapter 4)

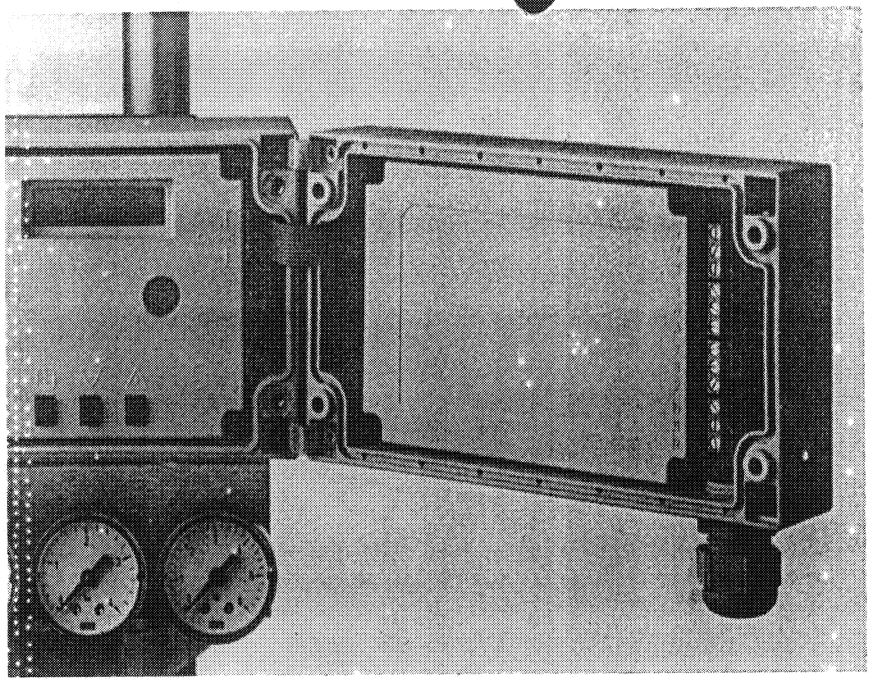

Bild 5 Montage Optionsbaugruppe
Figure 5 Installing the option module

Grundgerät/Basic unit

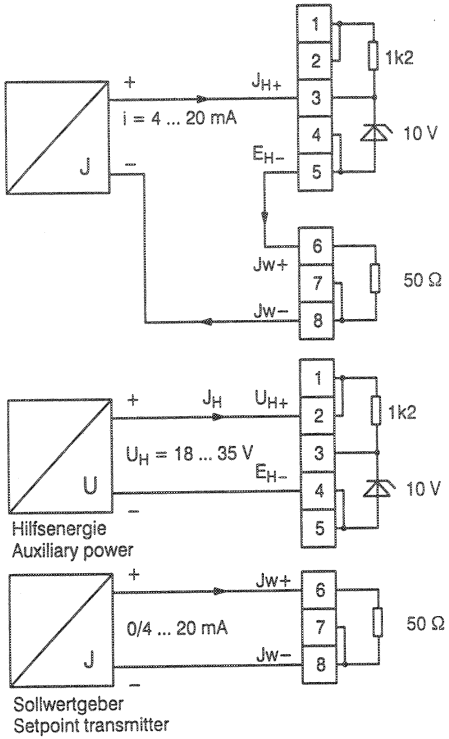

2–Leiteranschluß,
Hilfsenergie aus Signalstromkreis/
2–wire system,
auxiliary power from signal circuit

4–Leiteranschluß,
Hilfsenergie getrennt zugeführt/
4–wire system,
auxiliary power provided separately

$$I_H = \frac{U_H\,[V] - 10\ V}{1k2} \geq 4\ mA$$

Bild 6 Elektrischer Anschluß Grundgerät
Figure 6 Electrical connection of basic unit

Option

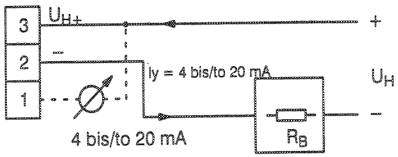

Stellungsrückmeldung/
Postion feedback

R_B = Bürdenwiderstand
Load resistance

$$R_B = \frac{U_H\,[V] - 12\ V}{Iy\ [mA]}\ [k\Omega]$$

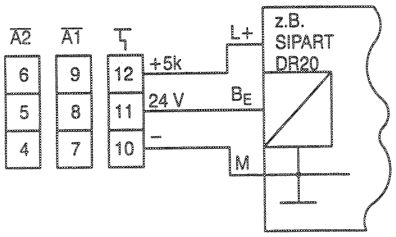

Alarmausgang A1 und A2 und
Meldeausgang
Alarm output A1 and A2 and A2 and
signal ouput

pos. Logik/pos. logic

L+ Hilfsenergie ≤35 V
Auxiliary power ≤35 V

B_E = Meldeeingang des Reglers
Signal input of the Regler

Bild 7 Elektrischer Anschluß Optionsbaugruppe
Figure 7 Electrical connection of option module

SAFETY VALVE

VS BABAR

CIRCLE SEAL CONTROLS, INC.

MFG. P/N KZZOTIF-4PP QTY. 1EA

CUSTOMER P/N — REV. —

SERIAL NO. 310213

CONTRACT NO. —

CUST. P.O. NO. S 4167

CLEANED PER CSC/CCD 29.10 Lev.B Rev.F

PACKAGED PER SAME

PARTICLE SIZE — MAX. MV — MG MAX.

CURE DATE — INSP. 198 DATE 10-22-93

OTHER:

CAUTION: THIS UNIT HAS BEEN SPECIALLY CLEANED AND PACKAGED.
DO NOT OPEN IN UNCONTROLLED AREA.
CUT - DO NOT TEAR BAG.

CA

T-2448R (4/93)

T-2448R (4/93)

C A R R A R O S.R.L.
VALVOLE E STRUMENTAZIONE
VIA ENRICO FERMI 22 - 20090 SEGRATE (MILANO)
TELEFAX : (02) 26922452 TELEFONO : (02) 269912.1
TELEX : 321142 C.F./IVA : 04825610159

FAX EMESSO DAL LA SIG.RA TOMADIN TEL. DIRETTO (02) 269912.39

DATA : 26/01/98

DITTA : **ANSALDO**

ATTN. : **DR. VALENTE**

VS.RIF.: BC196971

OGGETTO: TEST REPORT

Comune :

Prov. :

N. reg.: 71394

Cod.mat: 1
Agente : 1

ALLEGATO COPIA TEST REPORT N° 3445/97.

SALUTI

****
NB! : PER FAVORE PRENDETE NOTA DEL NUMERO TEL. CON CHIAMATA DIRETTA

CARRARO S.R.L. - VALVES AND INSTRUMENTATION
VIA ENRICO FERMI 22 I-20090 SEGRATE (MILANO) ITALY
FAX : 039 2 26922452 - PHONE : 039 2 269912.1
TELEX : 321142 VAT : IT 04825610159

TEST REPORT N.3445/97

P. ORDER N.BC196971 UMA GMO 00 **dtd 10/06/97 It.**
CUSTOMER : ANSALDO ENERGIA SPA
OUR REF. : 71394 dtd 12/06/97 It. 1

CODE : J30J-I34HXIC1 QUANTITY : 1 S. NUMBER : CS-60910

SAFETY VALVE CS30J/IF1L-E
ND 50 B.W.-65/NP 16
SET PRESSURE 4 BAR
MEDIUM: AIR at 25°C

TESTS AND ISPECTIONS	ACCORDING TO UNI EN 10204 3.1.B		2.2		
■ VISUAL AND DIMENSIONAL INSPECTION Result: **POSITIVE**		■ HYDROSTATIC TEST (according to instruction ITC 001) INLET/OUTLET PRESS.=24 BAR Result: **POSITIVE**			
■ BENCH FUNCTIONAL TEST (according to instruction ITC) Result: **POSITIVE**		☐ Result:			
■ TIGHTNESS TEST (according to instruction ITC) Result: **POSITIVE**		☐ Result:			

PART	MATERIAL	HEAT	CERTIFICATE	NOTE
VALVE BODY	AISI 316	177910	115916-JU	DI.E87
SEAT	AISI 316	643303	53378	TDN.162
DISC	ASTM A 479,95B S31600	225642	4754/96-C	V.E108

CUSTOMER	OFFICIAL BODIES	CARRARO QC
Date	Date	CARRARO S.R.L. C. Q. 1 DATA: 30/7/97 FIRMA: Tonadini
Stamp and signature	Stamp and signature	

EDELSTAHL WITTEN-KREFELD GMBH

Prüfbescheinigung
Prüfbescheinigung
Inspection document; Document de contrôle

Edelstahl Witten-Krefeld GmbH · D-58449 Witten

035

DELTA ACCIAI S.P.A.
VIA DONATELLO, 11
I-10071 BORGARO TORINESE

Nr. · No.	Datum · Date	Bestellung · Order No. / Commande No.
115916-[illegible]	10.05.96	[illegible]-45080

Unsere Abteilung	Telefon · Teleph. · Téléph.	Kunden-Nr. / Customer's name · Index
VR 2	02302-294837	[illegible]977160-00

Ihre Bestellung Nr./vom · Your order No./dated · Commande No./du
700.033 (98)
24.02.95

Prüfbescheinigung DIN 50049; DIN EN 10204
3.1B 2 fach 50809

Gegenstand
Product
Produit

STAEBE / BARS
REMANIT 4404 , SUPER IM, TYP 316 / 316 L
GEWALZT, ABGESCHRECKT, GERICHTET, GESCHAELT /
HOT ROLLED, SOLUTION-ANNEALED, STRAIGHTENED, REELED
DIN 17440,
TYP 316/316 L ACC. TO ASTM A 479

334990

RS

Pos. Item	Anzahl Quantity · Nombre	Abmessung · Size · Dimension (mm)			Netto-Gewicht Net Weight Poids Net (kg)	Herstellerzeichen Mark of the manufacturer Signe du producteur	Prüfstempel Inspector's stamp Poinçon de l'expert
01		RD	95,000	6000-		wk	QA
			+ 0,540	7000			
			- 0	+UL			

Schmelzen-Nr. Cast No. No. de coulée — Erschmelzungsart · Steelmaking Process · Procédé d'Elaboration: E

Schmelzen-Nr. Cast No. No. de coulée	% C	% SI	% MN	% P	% S	% CR	% MO	% NI	% CO	% N
177910	0,016	0,40	1,70	0,023	0,025	16,70	2,12	11,30	0,034	,0199

LIEFERZUSTAND: 1050 C BESCHLEUNIGTE LUFTABKUEHLUNG
CONDITION OF DELIVERY: 1050 C ACCELERATED AIR COOLING

Probe-/Bund-Nr. Test-/Coil-No. No. d'éprouv./coil	Prob.-Lage Pos. of Test Position	Prob.-Abmessung Test-Dimension Dimension	Pr.-Temp. T.-Temp. Temp. °C	Rp 0,2 % (N/mm²) - MPa	1%	RM (N/mm²) - MPa	A5 (%)	A2* (%)	Z (%)	Pr.-Form Type of Sp. Type	Härte Hardness Dureté
18722	L	12.52	23	279	322	583	49.9	53.3	75		
	L		23	>205	>240	515-710	>40	>40	>40		

DIE LIEFERUNG WURDE
AUF IK-BESTAENDIGKEIT GEPRUEFT (ASTM A 262 PRACT. E)
US-GEPRUEFT
AUF IDENTITAET GEPRUEFT (SPECTRO.)
BESICHTIGT UND AUF MASS KONTROLLIERT UND FREIGEGEBEN.

STUECKZAHL UND GEWICHT SIEHE RECHNUNG.

RESISTANT TO INTERCRYSTALLINE CORROSION (ASTM A 262 PRACT. E)
ULTRASONIC TESTING HAS BEEN PERFORMED
IDENTITY HAS BEEN CHECKED (SPECTRO.), VISUAL INSP. AND
CONTROLL F. DIMENS. ACCURACY HAVE BEEN PERFORMED.

QUANTITY AND WEIGHT SEE DELIVERY BILL/INVOICE.

EDELSTAHL WITTEN-KREFELD GMBH
- ABNAHME -

Erläuterungen siehe Rückseite
Explanations see overleaf · Explications voir au dos

D1. E87

Ugine-Savoie

FRANCE 0325180

N. Nr No 53378 | N. de commande usine-Werksbestellnummer-Works order number: FUGE FUG2 1/1 3A985000 T

3

CERTIFICAT DE RECEPTION 3.1.B (CCPU)
ABNAHMEPRUEFZEUGNIS 3.1.B
INSPECTION CERTIFICATE 3.1.B

EN 10204 / DIN 50049

5 Usine Productrice / Hersteller / Manufacturer: **UGINE** F 73403 UGINE CEDEX Tél : 79.89.30.30 télex ugine 980 050

Produit / Erzeugnisform / Product: BARRE LAMINATE DECALAMINATE SOLUBILIZZATE

Client et/ou destinataire - Besteller und/oder Empfaenger - Purchaser and/or Consignee: UGINE SRL 9

N. de commande client - Kundebestellnummer - Purchaser order number:

Nuance et spécifications techniques - Staisorte und Pruefbedingungen - Quality and Specifications: UGIMA 316S ASTM A276 TYPE 316
ASTM A182-94C/A276-94B/A479-94A

Etat de livraison - Lieferzustand - As delivered (1): SOLUBILIZZATO 13

Traitement de Référence - Probestreifenbehandlung - Treatment of test samples (1):

Identification du produit / Erzeugnis Benennung-Product Identification: N. de cde usine / Werksbestellnummer / Works order number 15	N. de poste / Post Nr / Item No 17	N. de Coulée / Schmelz Nr / Heat No 16	Nombre / Stueckzahl / Pieces Nbr 18	Profil / Profile / Shape 19-20	Longueur / Laenge / Length 21	Masse / Gewicht / Weight 22
3A985	000	643303	7	TONDO	65,000	1004 KG

N. de Prélèvement / Probenummer / Test N. 39 B	Demandé-Vorschrift-Required (3) 24	Sens / Richtung / Direction 25	Température d'essai / Pruefteemperatur / Test Temperature	Traction - Zugversuch - Tensile test: Limite d'Elasticité / Streckgrenze / Yield Strength 0,2 % 26 A	1 % 26 B	Résistance à la traction / Zugfestigkeit / Tensile strength 27	Allongement / Bruchdehnung / Elongation (l.d = 5d) 28	Striction / Einschnuerung / Red of Area 29	Dureté / Haerte / Hardness (4) 30	Résilience - Kerbschlagzaehigkeit - Notch Toughness: Type / Form / Type 31	Sens / Richtung / Direction (3) 32	Température d'essai / Pruefteemperatur / Test Temperature 33	Valeurs individuelles / Einzelwerte / Individual Values 35	Moyenne / Mittelwerte / Average 36	Dureté / Haerte / Hardness (6) 37
	L	RT		N/MM2	N/MM2	N/MM2	%	%				RT			
	Min			205		530	40	50							
	Max					710									
	(4)														
				310		610	56	76							
	(5)														

39 A N. de Prélèvement / Probenummer / Test N.	40 Demandé / Vorschrift / Required	41 Analyse/Produit-Stueckanalyse-Check Analysis	42 C	43 SI	44 MN	45 NI	46 CR	47 MO	48 CU	49 N	50 S
	Min					10,00	16,00	2,00			
	Max		0,080	1,00	2,00	14,00	18,00	3,00		0,10	0,030
	N. de Coulée / Schmelz Nr / Heat N. 643303		0,046	0,37	1,33	10,55	16,63	2,07	0,54	0,03	0,025

38 Mode d'élaboration / Erschmelzungsart / Melting process	51 Demandé / Vorschrift / Required	52	53	54	55
Electrique / Elektrisch / Electric	P				
	Min				
	Max 0,045				
	0,033				

Z7CND17-12-02 NFA 35574/WNR 4401 DIN 17440/
AISI 316 - VALEUR MINI GARANTIE ISO-V=160J.

BARRE LAMINATE DECALAMINATE SOLUBILIZZATE

"TDN 162"

(3) L = Long / Laengs - Long; T = Travers / Quer-Transverse 58

(1) TE = Trempé à l'eau - Wasserhaerten - Waterquench; TH = Trempé à l'huile - Oilharten - Oil Quench; A = Hypertrempé - Losungsgeglueht - Solution annealed; R = Revenu - Anlassen - Tempered; RT = Recuit - Geglueht - Annealed; TRM = Recuit maxi - Weichgeglueht - Maxi annealed 7

(4) A l'état de référence / Zum Bezug Zustand / At reference condition 60 A

(5) A l'état de livraison / In Lieferzustand / In state of delivery 60 B

Controles de marquage, d'aspect et de dimensions satisfaisants / Bezeichnung, Besichtigung und Ausmessung : ohne Beanstandung / Marking, inspection and measurement : without objection 62

Nous certifions que les produits énumérés ci-dessus sont conformes aux prescriptions de la commande / Wir bestatigen hiermit dass die obengenannten Erzeugnisse den Bestellungvorschriften entsprechen / We certify hereby that the above mentioned products are consistent with the order prescriptions 66

Ugine, le 16-11-96

L'Agent Réceptionnaire de l'u / Der Werkssachverstaendige / The Work Inspector

C. Bioteau

Acciaierie Valbruna s.r.l.
36100 Vicenza (Italia) - V.le della Scienza, 25

Telex 480090 VALVI I - Telegrammi: Acciaierie Valbruna - Fax: (0444) 963836
Telef.: (0444) 966211 (30 linee R.A.) - Casella postale 784 - C.C.I.A.A. 190669
Canc. Tribunale di Vicenza n. 19944 - Cod. Fisc. e Partita IVA 01863340244

FILIALE DI CORMANO MI

CERTIFICATO DI COLLAUDO
(Test certificate)

N. 4754/96-C

Bolla di consegna n. / delivery note: 96/P213/C

Conferma n. / confirmation: 96 K 9356

Cliente / purchaser: CARRAR

Tipo / quality: MVAPM [MAXIVAL]

Ordine n. / purchaser order: 6214

Stato di fornitura / delivery condition: PELATO SOLUB.

Profilo in mm. / size: TONDO 75.00

Peso Kg. / weight: 190

Analisi Richiesta / chemical requirem.		C	Si	Mn	Cr	Ni	Mo	P	S	N
	min				16.00	10.00	2.00			
	max	0.08	1.00	2.00	18.00	14.00	3.00	0.045	0.030	0.10

Nr. Colata / heat nr.	C	Si	Mn	Cr	Ni	Mo	P	S	N
225642	0.04	0.58	1.45	16.35	10.11	2.04	0.030	0.029	0.06

Specifiche applicabili: ASTM A479,95B, S31600

Trattamento Termico del Saggio / sample heat treatment		Normalizz. / normaliz.	Ricottura / annealing	Ricristallizz. / annealing	Invecchiam. / aging	Solubilizz. / annealing	Tempra / quenching	Mezzo / medium	Rinvenimento / tempering
	°C								

Caratt. Meccaniche Richieste / mechanical requirements		R N/mm²	R0.2 N/mm²	E %	RA %	Lavoro assorbito / impact value Joule KV	KCU	Durezza / hardness HB	HRC
☐ colata / heat	min	515	205	30	40				
☒ prodotto / as-shipped	max								

Provetta / specimen Ø o ≠ mm	Lo mm	R N/mm²	R0.2 N/mm²	E %	RA %	Joule KV	KCU	HB	HRC
12.5	50	598	271	60	75				

Note / remarks

COPIA CONFORME ...
ACCIAIERIE VALBRUNA s.r.l.
FILIALE DI CORMANO

Acciaio prodotto al forno elettrico ad arco.
- Materiale solubilizzato a : 1040 C min/raffreddato in H20

Vicenza, 14/10/96

Resp. Controllo Qualità / Quality Control: [signature]

Il Collaudatore / Inspector: V.E108

cer-01 R

Valvola tipo: / *Valve type:* " CS 31 " (attacchi flangiati / *Flanged ends*)

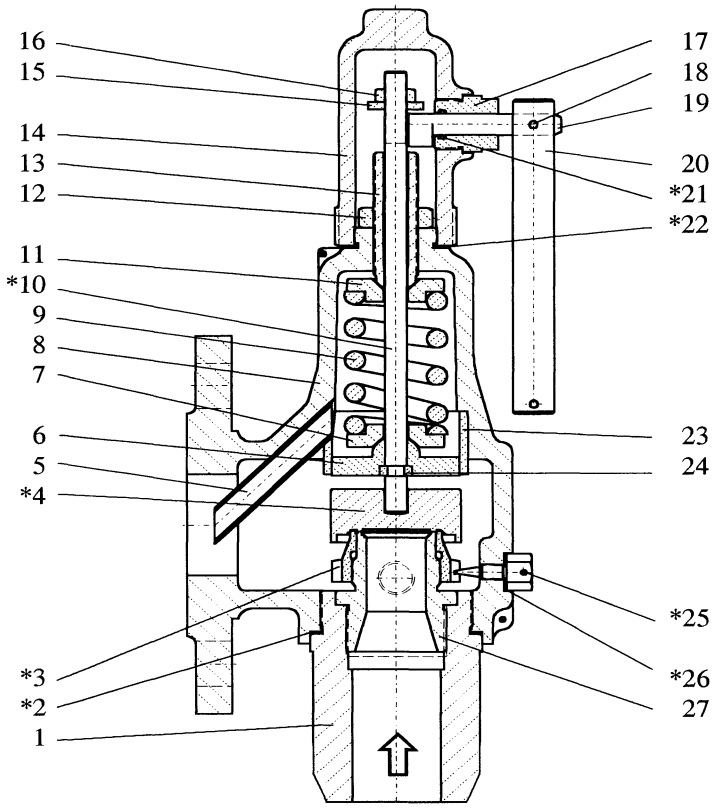

Valvola tipo CS 31 (Con leva)
CS 31 type valve (With lever)

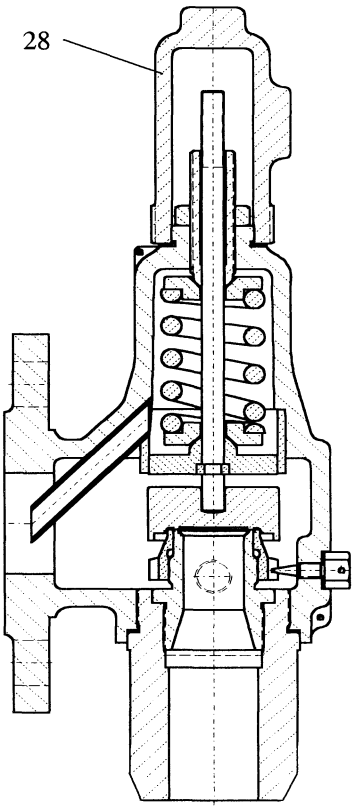

Valvola tipo CS 31 (Senza leva)
CS 31 type valve (Without lever)

TAPPI A TENUTA ELASTICA
RESILIENT TIGHTNESS DISC

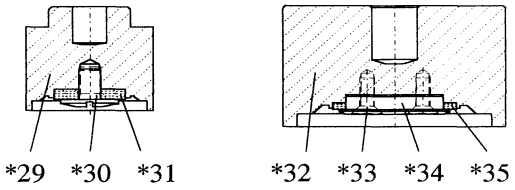

Per orifici tipo:
For orifice type:
" D - E - F "

Per orifici tipo:
For orifice type:
" G - H - J "

1 - Corpo valvola / *Valve body*	*10 - Asta / *Stem*	18 - Perno leva / *Lever pin*	*26 - Guarnizione / *Gasket*
*2 - Guarnizione / *Gasket*	11 - Piattello superiore / *Upper washer*	19 - Albero comando / *Control shaft*	27 - Sede / *Nozzle*
*3 - Anello regolazione / *Adjusting ring*	12 - Controdado / *Lock nut*	20 - Leva / *Lever*	28 - Cappello / *Cap*
*4 - Tappo / *Disc*	13 - Vite di taratura / *Compression screw*	*21 - Guarnizione / *Gasket*	*29 - Tappo / *Disc*
5 - Tubo eiettore / *Eductor tube*	14 - Cappello / *Cap*	*22 - Guarnizione / *Gasket*	*30 - Vite guarniz./ *Gasket screw*
6 - Pistone / *Piston*	15 - Dado per asta / *Stem nut*	23 - Guida / *Guide*	*31 - Guarnizione / *Gasket*
7 - Piattello infer. / *Lower washer*	16 - Dado / *Nut*	24 - Anello per asta / *Stem ring*	*32 - Tappo / *Disc*
8 - Incastellatura / *Bonnet*	17 - Manicotto / *Sleeve*	*25 - Vite anello regolazione / *Adjusting ring pin*	*33 - Vite / *Screw*
9 - Molla / *Spring*			*34 - Piattello guarn./ *Gasket plate*
			*35 - Guarnizione / *Gasket*

* RICAMBI CONSIGLIATI / *RECOMMENDED SPARE PARTS*
N.B.:I gruppi di partic.(29, 30, 31) e (32, 33, 34, 35) sono fornibili in unico set.
Note: *Part units (29, 30, 31) and (32, 33, 34, 35) are supplied in one set only.*

La CARRARO si riserva il diritto di modificare in qualsiasi momento e senza preavviso, le caratteristiche dei prodotti qui illustrati. *CARRARO reserves the right to modify the characteristics of here described products at any time and without notice.*

CARRARO S.R.L.
VALVOLE E STRUMENTAZIONE
20090 SEGRATE (MI) - VIA E. FERMI 22
TEL.(02) 269912.1 - FAX (02) 2692.2452

Rev.0 - 23/06/97 | DIS. 93132.PM4
Emesso: | Approv.:

Valvola di sicurezza tipo / *Safety valve type:* " CS 30 " - " CS 31 "

TIPO / *TYPE*: CS30

TIPO / *TYPE*: CS31
SENZA LEVA / *WITHOUT LEVER*

TIPO / *TYPE*: CS31
CON LEVA / *WITH LEVER*

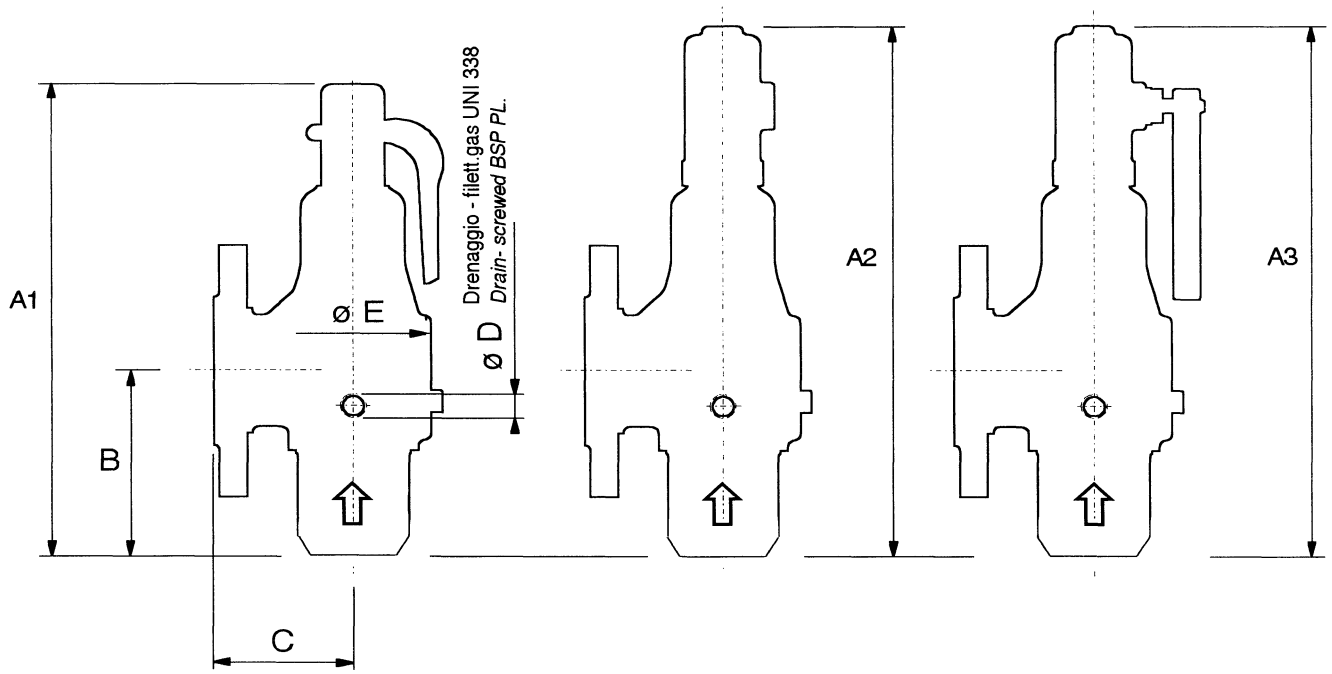

ATTACCHI A SALDARE B.W. *B.W. ENDS* Entrata / *Inlet*	
ANSI B16.25	●
	□

ATTACCHI FLANGIATI *FLANGED ENDS* Uscita / *Outlet*	
UNI PN/NP 16	●
ANSI 150 RF	□
	□

DN Attacchi /*Connections ND*		A1	A2	A3	B	C	øD	øE	Orifici standard previsti *Provided stand. orifices*	Altri orifici realizzabili *Other feasible orifices*		
Entrata / *Inlet*	Uscita / *Outlet*											
15 (1/2")	25 (1")	240	250	250		62	1/8"	62	□ D			
20 (3/4")	25 (1")	240	250	250		62	1/8"	62	□ E	□ D		
25 (1")	40 (1.1/2")	300	320	320		75	1/4"	84	□ F	□ D	□ E	
25 (1")	50 (2")	300	320	320		75	1/4"	84		□ D	□ E	□ F
32 (1.1/4")	40 (1.1/2")	300	320	320		75	1/4"	84	□ G	□ D	□ E	□ F
40 (1.1/2")	65 (2.1/2")	380	400	400		100	1/4"	114	□ H	□ F	□ G	□ J
40 (1.1/2")	80 (3")	380	400	400		110	1/4"	114		□ G	□ H	
● 50 (2")	65 (2.1/2")	380	400	400	160	100	1/4"	114	● J	□ G	□ H	
50 (2")	80 (3")	380	400	400	160	110	1/4"	114		□ G	□ H	□ J
										□		

La CARRARO si riserva il diritto di modificare in qualsiasi momento e senza preavviso, le caratteristiche dei prodotti qui illustrati. *CARRARO reserves the right to modify the characteristics of here described products at any time and without notice.*

CARRARO S.R.L.
VALVOLE E STRUMENTAZIONE
20090 SEGRATE (MI) - VIA E. FERMI 22
TEL.(02) 269912.1 - FAX (02) 2692.2452

Rev.0 - 23/06/97	DIS. 93131.PM4
Emesso:	Approv:

1 - Queste valvole possono essere:

1.1 - Tipo CS 30 - ad incastellatura aperta (non a tenuta).
- Flangiate (Fig.1) oppure filettate (Fig.2).
Le valvole CS 30 sono sempre dotate di leva, e possono avere il tappo a tenuta metallica oppure a tenuta elastica.

1.2 - Tipo CS 31 - ad incastellatura chiusa (a tenuta).
- Flangiate con leva (Fig.3) o senza leva (Fig.4),
- Filettate con leva (Fig.5) o senza leva (Fig.6).
Tappo a tenuta metallica oppure a tenuta elastica.

2 - Ogni valvola sarà distinta da una sigla costituita da lettere e numeri secondo la seguente identificazione:

CS = Carraro Sicurezza
30 = Valvola con incastellatura non a tenuta
31 = Valvola con incastellatura a tenuta
D-E-F-G-H-J = Orificio
G = Valvola con incastellatura in ghisa
A = Valvola con incastellatura in acciaio al carbonio
I = Valvola con incastellatura in acciaio inossidabile
S = Valvola con attacchi filettati
F = Valvola con attacchi flangiati
* = Numero variabile secondo l'esecuzione
L = Valvola con leva di sollevamento
E = Tenuta elastica

Esempio: **CS 31 F / G S 1 L**
valvola tipo CS 31 con orificio F, incastellatura in ghisa, attacchi filettati, esecuzione standard, leva.

3 - INSTALLAZIONE.

Vedere la Fig.7(A-B-C-D) "Prescrizioni per la tubazione di scarico".

Le valvole di sicurezza devono essere montate in posizione verticale direttamente sull'apparecchio che deve essere protetto, oppure tramite un tronchetto di tubazione di diametro non inferiore a quello di entrata della valvola di sicurezza e di lunghezza non superiore a tre volte detto diametro.

In nessun caso si deve collocare una valvola di intercettazione od altro impedimento tra l'apparecchio da proteggere e la valvola di sicurezza.

Prima dell'installazione, pulire attentamente e scrupolosamente l'entrata della valvola di sicurezza ed il tronchetto di collegamento (se esiste).

Poichè la valvola di sicurezza non deve essere sottoposta a sforzi provocati dalla tubazione di scarico, una congiunzione scorrevole deve essere inserita tra la valvola di

1 - These valves may be:

1.1 - Type CS 30 *- with open bonnet (unsealed).*
- Flanged (Fig.1) or threaded (Fig.2).
- The CS 30 valves are always with lifting lever, and may have metal seated or resilient seated disc.

1.2 - Type CS 31 *- with closed bonnet (sealed).*
- Flanged with lever (Fig.3) or without lever (Fig.4).
- Threaded with lever (Fig.5) or without lever (Fig.6).
Metal seated or resilient seated disc.

2 - Each valve is coded as follows:

CS = Carraro Safety
30 = Valve with unsealed bonnet
31 = Valve with sealed bonnet
D-E-F-G-H-J = Orifice
G = Valve with iron bonnet
A = Valve with carbon steel bonnet
I = Valve with stainless steel bonnet
S = Threaded valve
F = Flanged valve
** = Number variable according to the execution*
L = Valve with lifting lever
E = Valve with resilient seated disc

Example: ***CS 31 F / G S 1 L***
Valve type CS31, with F orifice, iron bonnet, threaded connections, standard execution, with lifting lever.

3 - INSTALLATION.

See Fig.7(A-B-C-D) "Discharge pipe prescriptions".

The safety valves shall be installed in vertical position, direct on the vessel to be protected, or through a pipe of a diameter not less than the safety valve inlet, and of a length no more than three times its diameter.

Never install a stop valve or any other hindrance between the vessel, to be protected, and the safety valve.

Before installing it, clean carefully the safety valve inlet and the connecting pipe, if any.

As the safety valve must not be subject to stresses caused by the discharge pipe, a sliding connection must be put between the safety valve and the discharge line, leaving clearance enough to absorb movements due to thermal expansion.

sicurezza e il tubo di scarico, lasciando un ampio gioco per tener conto dei movimenti dovuti alle dilatazioni termiche.

Il tubo di scarico deve essere sufficientemente grande da poter scaricare la piena portata della valvola ed impedire le fughe di fluido dal giunto scorrevole. La tubazione deve essere accuratamente studiata sia come dimensionamento della sezione in funzione della sua lunghezza (la perdita di carico complessiva è una contropressione aggiunta), sia per quanto riguarda le dilatazioni (specie se scaricano fluidi caldi) per evitare che la tubazione stessa induca sulla valvola forze tendenti a deformare il corpo.

Il diametro interno del tubo di scarico non deve essere inferiore a quello interno di uscita della valvola di sicurezza.

Se le valvole sono impiegate su gas incondensabili (aria, gas, ecc.) deve essere montato un tappo sul foro di drenaggio (vedere Fig.7/B).

Se esse sono impiegate per vapori o gas condensabili, applicare un tubo di drenaggio per convogliare il condensato ad un collettore di scarico. Nelle valvole con attacchi filettati l'incastellatura ha l'attacco di uscita filettato conico NPT.

Pertanto, specialmente per i tipi costruiti in ghisa, nell'avvitare l'eventuale tubazione di scarico evitare di stringerla con troppa forza (del resto inutile poichè sullo scarico aperto all'atmosfera, la tenuta non è necessaria). In caso contrario l'incastellatura potrebbe subire danni.

4 - TARATURA DELLE VALVOLE DI SICUREZZA.

Le valvole di sicurezza vengono tarate in officina con aria compressa al banco, non essendo possibile creare in officina tutte le condizioni che si possono riscontrare sull'impianto (p.e.: temperatura, dati geometrici dei tubi, ecc.).

Di conseguenza, specialmente se vengono impiegate con fluidi caldi (p.e. vapore), si renderà necessario un ritocco della taratura in esercizio. Pertanto, se possibile, evitare di far applicare sigilli al collaudo a freddo in fabbrica.

Per cambiare la pressione di taratura di una valvola di sicurezza si deve procedere come indicato nei paragrafi che seguono.

4.1 - Taratura delle valvole di sicurezza con leva di sollevamento, tipi:

CS 30/GF.L - CS 30/AF.L - CS 30/IF.L (Fig.1)
CS 30/GS.L - CS 30/AS.L - CS 30/IS.L (Fig.2).

Per aggiustare la pressione di taratura si deve procedere come segue:

- Togliere l'eventuale sigillo e la copiglia sul perno leva.
- Sfilare il perno leva (15) e la leva (19).

The discharge pipe must be of proper diameter to allow the discharge of the whole capacity of the valve and to avoid escapes of medium from the sliding joint.

The piping shall be carefully studied, both regarding the sizing of its section as a function of its length (the pressure drop is an additive backpressure) both regarding the thermal expansion (particularly when hot mediums are discharged) to avoid stresses on the valve which might deform the body.

The inside diameter of the discharge piping has not to be smaller than the safety valve inside outlet diameter.

If the safety valves are servicing non condensable gas (air, gas etc.) a plug should be fitted on the drain hole (see Fig. 7/B).

If they are servicing condensable gas or vapours, fit a drain pipe to convey the condensate to a discharge header.

In the valves with threaded connections the bonnet has NPT taper female outlet.

Therefore, particularly for cast iron bonnet, when screwing the possible discharge pipe avoid to force it (which is by the way useless, as the discharge pipe is open to athmosphere and tightness not necessary); on the contrary the bonnet could be damaged.

4 - SETTING OF SAFETY VALVES.

The safety valves are factory tested with compressed air at the testing bench, as it is impossible to get in the factory all of the operating conditions which shall verify on the plant (for instance temperature, pipe geometric data, etc.).

As a consequence, especially if used with hot mediums (e.g. steam), it will be necessary to adjust the setting on site.

As a consequence, if possible, avoid to have seals applied on the valve at factory test.

To change the set pressure of a safety valve, operate as specified in the following paragraphs.

4.1 - Setting of safety valves with lifting lever, types:

CS30/GF.L - CS30/AF.L - CS30/IF.L (Fig.1)
CS30/GS.L - CS30/AS.L - CS30/IS.L (Fig.2).

To adjust the set pressure operate as follows:

- *remove the seal and the split pin on the lever pin.*
- *remove the lever pin (15) and the lever (19).*
- *unscrew the cap screw (20).*
- *unloose the lock nut (14) and turn the screw (13), clockwise (screw up) if you need to increase the set pressure, or turn*

- Svitare la vite dal cappello (20).
- Allentare il controdado (14) e girare la vite di taratura (13), nel senso orario, (avvitare) se si vuole aumentare la pressione di taratura, e girare in senso contrario (svitare) se si vuole diminuire.
- Stringere il controdado (14) e rimontare i vari pezzi.
- Controllare che la leva (19) non sforzi contro il dado (16); il gioco tra le due parti deve essere di circa 1,5 mm.

4.2 - Taratura delle valvole di sicurezza con leva di sollevamento a tenuta, tipi:

CS 31/GF.L - CS 31/AF.L - CS 31/IF.L (Fig.3)
CS 31/GS.L - CS 31/AS.L - CS 31/IS.L (Fig.5).

Per aggiustare la pressione di taratura si deve procedere come segue:
- Togliere l'eventuale sigillo e il perno (18).
- Sfilare la leva (20).
- Svitare il manicotto (17) e togliere l'albero di comando (19). Fare attenzione alla guarnizione (21).
- Allentare il controdado (12) e girare la vite di taratura (13) nel senso orario (avvitando) se si vuole aumentare la pressione di taratura e girare in senso antiorario (svitando) se si vuole diminuire.
- Stringere il controdado (12).
- Avvitare il cappello (14) fino a battuta della guarnizione(22) (controllare che non sia danneggiata) posizionandolo in modo che il foro filettato per la leva capiti dal lato opposto allo scarico della valvola.
- Rimontare le varie parti della leva (17÷20), facendo attenzione che la guarnizione di tenuta (21) non sia danneggiata, che la camma dell'albero di comando sia rivolta verso il basso con un gioco di 1,5 mm circa con il dado (15).

Tutto ciò è facilmente controllabile poichè la leva deve muoversi per un breve tratto senza sforzo. In caso contrario agire sul dado e controdado (15 e 16).

4.3 - Taratura delle valvole di sicurezza senza leva di sollevamento, tipi:

CS 31/GF - CD 31/AF - CS 31/IF (Fig.4)
CS 31/GS - CS 31/AS - CS 31/IS (Fig.6).

Per aggiustare la pressione di taratura si deve procedere come segue:
- Togliere l'eventuale sigillo e svitare il cappello (28) di Fig.4 o (27) di Fig.6.
- Allentare il controdado (12) e girare la vite di taratura (13) nel senso orario (avvitare) se si vuole aumentare la pressione di taratura, e girare in senso contrario (svitare) se si vuole diminuire.
- Stringere il controdado (12) e rimontare il cappello (28) di (Fig.4) o pos.27 di (Fig.6).

counter-clockwise (unscrew) if you need to dicrease.
- tighten the lock nut (14) and reassemble all the parts.
- verify that the lever (19) does not strain against the nut (16); the clearance between parts must be about 1,5 mm.

4.2 - Setting of safety valves with sealed lifting lever, types:
CS31/GF.L - CS31/AF.L - CS31/IF.L (Fig.3)
CS31/GS.L - CS31/AS.L - GS31/IS.L (fig.5).

To adjust the set pressure operate as follows:

- take off the seal, if any and the lever pin (item 18), remove the lever (item 20)
- unscrew the sleeve (item 17) and take off tre control shaft (item 19)
- take care of the gasket (item 21)
- unscrew the cap (item 14)
- unloose the lock nut (item 12) and turn the compression screw (item 13) clockwise (screw) if you need to increase the set pressure, and turn counter-clockwise (unscrew) to drop down
- tighten the lock nut (item 12)
- screw the cap (item 14) till the gasket compression (item 22) (check that it is not damaged) placing it so that the screwed hole for the lever is on the opposite side of the valve discharge.
- reassemble the various parts of the lever (item 17 to 20) paying attention that the gasket (item 21) is not damaged and that the control shaft cam is turned downwards with a clearance of 1.5 mm abt. with the nut (item 15).

You can easily check it since the lever has to move for a short distance without effort. In the negative, act on the nut and the lock nut (items 15 and 16).

4.3 - Setting of safety valves without lifting lever, types:
CS31/GF - CS31/AF - CS31/IF (Fig.4)
CS31/GS - CS31/AS - CS31/IS (Fig.6).

To adjust the set pressure operate as follows:

- take off the seal, if any, and unscrew the cap (item 28 of Fig.4 or item 27 of Fig.6)
- unscrew the lock nut (item 12) and turn the compression screw (item 13) clockwise, if you need to increase the set pressure, or counterclockwise (unscrew) if you need to lower the set pressure.
- fasten the lock nut (12) and assemble the cap (item 28 of Fig.4 or item 27 of Fig.6).

5 - AGGIUSTAGGIO DELLO SCARTO DI PRESSIONE IN CHIUSURA (BLOWDOWN).

Quando cessa la causa che ha provocato l'apertura della valvola di sicurezza, la pressione nell'apparecchio protetto comincia a diminuire.

La chiusura della valvola avviene sempre ad una pressione inferiore a quella di taratura.

La differenza fra la pressione di chiusura e la pressione di taratura si definisce brevemente SCARTO DI PRESSIONE IN CHIUSURA (BLOWDOWN) e si esprime in percento della pressione di taratura.

Per esempio:

Pressione di taratura:	10,0 bar
Pressione di chiusura:	9,5 bar
SCARTO IN CHIUSURA	**0,5 bar**

ovvero scarto in chiusura del 5%.

Per aggiustare il blowdown, si deve togliere la vite di fermo dell'anello di regolazione (21) di Fig. 1 e 2, o (25) delle figure da (4) a (6) e si deve girare l'anello di regolazione, per mezzo di un attrezzo appuntito, muovendolo di una o due tacche per volta.

Girando l'anello in senso antiorario esso si alzerà e lo scarto di pressione in chiusura aumenterà; girando l'anello in senso orario si avrà l'effetto contrario.

Se l'anello di regolazione è difficile da muovere a causa di impurità che si siano depositate nella filettatura, esso può essere liberato dando leggeri colpi sull'incastellatura in corrispondenza dell'anello.

Terminate le operazioni di taratura assicurarsi che sia applicato l'eventuale sigillo.

6 - DISTURBI DI FUNZIONAMENTO.

I disturbi più comuni sono: le perdite, il martellamento e il bloccaggio a valvola parzialmente aperta. Alcuni disturbi possono sorgere dall'usura, da danneggiamento delle parti interne, da difettosa installazione o regolazione.

6.1 - Perdite di fluido.

6.1.1 - Perdite di fluido nelle valvole con leva di sollevamento, tipo:

CS 30/GF.L - CS 30/AF.L - CS 30/IF.L (Fig.1)
CS 30/GS.L - CS 30/AS.L - CS 30/IS.L (Fig.2).

E' molto importante che la pressione normale di esercizio sia sempre inferiore rispetto a quella di taratura di almeno 10%; in caso contrario la forza esercitata dalla molla

5 - ADJUSTMENT OF BLOWDOWN.

When the cause of the valve opening is over, the pressure in the protected unit starts lowering.

The shut-down of the valve arrives at a pressure lower than the set pressure.

***The difference between the set pressure and shut-down pressure is called "BLOWDOWN"** and is given in percentage of set pressure.*

For instance:

Set pressure:	*10.0 bar*
Shut down pressure:	*9.5 bar*
BLOWDOWN:	***0.5 bar***

that is a blowdown of 5%.

To adjust the blowdown, take off the adjusting ring pin (item 21 of Fig. 1 and 2, or item 25 of Fig. 4 to 6), and turn the adjusting ring, by means of a pointed tool, one or two notches at a time.

By rotating the ring counter-clockwise it will go up and the blowdown will increase; by rotating the ring clockwise the effect shall be the contrary.

Should the adjusting ring be hard to move due to impurities deposited in the thread, it can be freed by means of light taps on the bonnet near the ring.

After setting operations make sure that seal, if existing, be properly re-affixed.

6 - OPERATION TROUBLES.

The most common troubles are leakage, chattering, hang-up and lowering of set pressure.

These troubles may be developed by wear, damage to working parts or due to wrong installation or setting.

6.1 - Leakage.

6.1.1- Leakage in the safety valves with lifting lever, types:

CS30/GF.L - CS30/AF.L - CS30/IF.L (Fig.1)
CS30/GS.L - CS30/AS.L - CS30/IS.L (Fig.2).

It is very important that normal operating pressure is always at least 10% lower than popping pressure, otherwise the force caused by the spring on the disc to determine tightness is so small that a slight pressure rise is sufficient to cause leakage.

sul tappo per determinare la tenuta è così piccola che basta una lieve oscillazione dalla pressione per avviare una perdita.

Se si ha una lievissima perdita di fluido (che si può notare da un sibilo) quando la pressione ha quasi raggiunto il punto d'apertura, questa può essere trascurata e indica solamente che vi sono delle lievi irregolarità sulle superfici delle sedi di tenuta.

Una perdita di fluido più grande indica invece che la sede è danneggiata.

Si possono avere anche delle perdite continue alla normale pressione d'esercizio notevolmente al di sotto della pressione di chiusura della valvola.

Queste perdite possono essere provocate dal danneggiamento delle sedi di tenuta dovute a corpi estranei depositati sulle sedi stesse. Effettuare mediante la leva per l'apertura a mano (19) alcuni scarichi.

Se non si elimina l'inconveniente, la valvola deve essere riparata al più presto per prevenire gravi erosioni alle sedi.

Altre perdite possono essere date da cause meccaniche quali: mancanza di gioco tra il dado (16) e la leva (19), deformazione del corpo valvola dovuta alla errata installazione del tubo di scarico, così da indurre dannosi sforzi sulla valvola.

6.1.2 -Perdite di fluido nelle valvole con leva di sollevamento a tenuta, tipo:

CS 31/GF.L - CS 31/AF.L - CS 31/IF.L (Fig.3)
CS 31/GS.L - CS 31/AS.L - CS 31/IS.L (Fig.5).

Per queste valvole vale quanto detto al paragrafo 6.1, facendo riferimento alla pos.20 per la leva e alla pos.15 per il dado (Fig.3 e 5).

6.1.3 -Perdite di fluido nelle valvole senza leva di sollevamento, tipo:

CS 31/GF - CS 31/AF - CS 31/IF (Fig.4)
CS 31/GS - CS 31/AS - CS 31/IS (Fig.6).

E' molto importante che la pressione normale di esercizio sia sempre inferiore rispetto a quella di taratura di almeno 10%; in caso contrario la forza esercitata dalla molla sul tappo per determinare la tenuta è così piccola che basta una lieve oscillazione dalla pressione per avviare una perdita.

Se si ha una lievissima perdita di fluido (che si può notare da un sibilo) quando la pressione ha quasi raggiunto il punto d'apertura, questa può essere trascurata e indica solamente che vi sono delle lievi irregolarità sulle superfici delle sedi di tenuta.

Una perdita di fluido più grande indica invece che la sede è danneggiata. Si possono avere anche delle perdite continue alla normale pressione d'esercizio notevolmente al

If there is a very small leakage (that can be noticed from a light simmer) when pressure has almost reached the set point, there are only slight irregularities on the seating surfaces.

If leakage is remarkable, seat is damaged.

You may have continuous leakage at normal operating pressure, below closing pressure.

It may be caused by seating surface damage due to foreign matter trapped.

By means of the lever (item 19) make some discharges.

If trouble is not eliminated, the valve must be repaired as soon as possible to prevent serious erosions of the seats. Leakage can be also due to the following mechanical causes: lack of clearance between nut (item 16) and the lever (item 19); deformation of the valve body because of wrong discharge pipe installation so as to cause strains on the valve.

6.1.2 - Leakage in the safety valves with packed lifting lever, types:

CS31/GF.L - CS31/AF.L - CS31/IS.L (Fig.3)
CS31/GS.L - CS31/AS.L - CS31/IS.L (Fig.5).

For these valves what was said on paragraph 6.1.1 is still valid, making reference to item (20) for the lever, and item (15) for the nut (Fig.3 and Fig.5).

6.1.3 - Leakage in the safety valves without lifting lever, types:

CS31/GF - CS31/AF - CS31/IF (Fig.4)
CS31/GS - CS31/AS - CS31/IS (Fig.6).

It is very important that normal operating pressure is always at least 10% lower than popping pressure, otherwise the force caused by the spring on the disc to determine tightness is so small that a slight pressure rise is sufficient to cause leakage.

If there is a very small leakage (that can be noticed from a light simmer) when pressure has almost reached the set point, there are only slight irregularities on the seating surfaces.

If leakage is remarkable, seat is damaged.

You may have continuous leakage at normal operating pressure, below closing pressure.

This leakage may be due to damage of seats caused by foreign matter deposited on seats or by deformation of the valve body due to wrong installation of the discharge piping, such as to cause damaging efforts on the valve.

di sotto della pressione di chiusura della valvola.

Queste perdite possono essere provocate dal danneggiamento delle sedi di tenuta dovute a corpi estranei depositati sulle sedi stesse o da deformazione del corpo valvola dovuta alla errata installazione del tubo di scarico, così da indurre dannosi sforzi sulla valvola.

6.2 - Martellamento.

Il martellamento è un'azione di apertura e richiusura rapidamente alternate del tappo sulla sede e deve essere eliminato immediatamente altrimenti le sedi di tenuta vengono rovinate. Il martellamento può essere provocato dai seguenti motivi:

1) - insufficiente scarto di pressione in chiusura.
2) - tubo di entrata troppo lungo o attacco di diametro troppo piccolo.
3) - portata insufficiente.
4) - contropressione eccessiva dovuta alla tubazione di scarico troppo lunga o di sezione troppo piccola.
5) - ostruzione o chiusura del foro di scarico all'atmosfera sull'incastellatura delle valvole tipo CS 30.
6) - ostruzione del tubo eiettore (5) di Fig.3 ÷ 6 per le valvole tipo CS 31.

Se la valvola è dotata di leva si può fermare il martellamento tenendo aperta la valvola con la leva finchè la pressione si sia ridotta di circa il 7 ÷ 8% sotto il valore di taratura.

Se la valvola è del tipo senza leva occorre provocare l'abbassamento della pressione agendo sull'impianto a monte della valvola. In entrambi i casi provvedere subito a individuare la causa del martellamento e ad eliminarla.

6.3 - Bloccaggio.

Il bloccaggio a valvola parzialmente aperta puè verificarsi in fase di chiusura.

Le cause principali di tale fenomeno sono:

1) - errato scarto di pressione in chiusura;
2) - attriti di origine meccanica.

Se una valvola si blocca parzialmente aperta, controllare se vi sono attriti ed eliminarli, in caso negativo girare l'anello di regolazione a sinistra (cioè in senso orario) di una o due tacche. Con l'abbassamento dell'anello il disturbo verrà eliminato.

6.4 - Abbassamento della pressione di taratura.

L'abbassamento della pressione di taratura è spesso attribuito alla perdita di elasticità della molla.

Salvo casi eccezionali esso è invece causato dal danneggiamento alle sedi di tenuta provocato da corpi estranei, dal martellamento, oppure dalla differenza nella distribuzio-

6.2 - Chattering.

Chattering is a hammering action of a vibratory nature of the disc on the seat bushing and must be stopped immediately or the seats will be ruined.

Chattering may be caused by the following reasons:

1) - not sufficient blow-down
2) - too long inlet pipe or undersized inlet connection
3) - not sufficient capacity
4) - too high back pressure due to very long or undersized discharge pipe
5) - obstruction or shut up of discharge passage to atmosphere on the bonnet of type CS30 safety valves.
6) - obstruction of the eductor tube (item 5 of Fig.3 to 6) for type CS31 safety valves.

Il the valve has a lever, the chattering may be stopped by keeping the valve open with the lever until the pressure is reduced about 7 to 8% under the set pressure value.

If the valve is without lever type, the pressure lowering is to be obtained by acting on the upstream plant. In both cases the reason of hammering is to be defined at once and eliminated.

6.3 - Hang up.

Hang up of a partially open valve may occur during the closing stage. The main causes of this fault are:

1) - erroneous blow-down
2) - mechanical friction

Should a valve hang up partially open, check wheter there are frictions and eliminate them. In the negative turn the adjusting ring clockwise one or two notches.

By lowering the ring trouble should be eliminated.

6.4 - Lowering of set pressure.

Dropping of the popping point is many times unjustly charged against the spring losing its tension.

Invariably, however, it is caused by damage to the seats from foreign matter, from chatter, or difference in heat distribution between pops.

Check whether there is leakage before retouching setting.

Valves should not be subject to several tests at short time intervals, but first let valves be cool.

ne del calore nelle parti interne della valvola di sicurezza fra uno scarico e l'altro.

Controllare quindi accuratamente se vi sono perdite prima di ritoccare la taratura.

Non fare prove ripetute a breve distanza di tempo l'una dall'altra ma prima far raffreddare la valvola.

7 - SMONTAGGIO VALVOLA DI SICUREZZA.

7.1 - Smontaggio delle valvole di sicurezza con leva di sollevamento, tipi:

CS 30/GF.L - CS 30/AF.L - CS 30/IF.L (Fig.1)
CS 30/GS.L - CS 30/AS.L - CS 30/IS.L (Fig.2).

- Togliere l'eventuale sigillo e la copiglia.
- Sfilare il perno leva (15) e la leva (19).
- Svitare la vite (20) e togliere il cappello (18).
- Sbloccare il controdado (17) e smontarlo dall'asta (10).
- Svitare il dado (16).
- Togliere l'eventuale sigillo e svitare la vite di fermo (21).
- Girare l'anello di regolazione (3) verso destra fino a che tocchi il tappo (4), contando e segnando a parte il numero delle tacche corrispondenti allo spostamento dell'anello, poichè al rimontaggio esso dovrà essere riportato nella posizione iniziale.
- Allentare il controdado (14) e svitare la vite di taratura (13) (nel senso antiorario) contando il numero dei giri fino a molla completamente scaricata.
- Serrare il corpo valvola in morsa e allentare la connessione fra corpo valvola ed incastellatura utilizzando sempre e solo una chiave a nastro (non usare mai il giratubi, o qualsiasi altra chiave da idraulico, poichè si potrebbe danneggiare l'incastellatura).
- Svitare completamente l'incastellatura dal corpo valvola.
- Togliere il tappo (4).
- Sfilare il complesso asta-piattelli-molla. Fare attenzione che i due semianelli (5) non vadano persi, poichè a molla scaricata potrebbero uscire dalla loro sede.
- Svitare l'anello di regolazione (3) dal corpo-sede (1) (Fig.1) o (22) (Fig.2).

7.2 - Smontaggio delle valvole di sicurezza con leva di sollevamento a tenuta, tipi:

CS 31/GF.L - CS 31/AF.L - CS 31/IF.L (Fig.3)
CS 31/GS.L - CS 31/AS.L - CS 31/IS.L (Fig.5).

- Togliere l'eventuale sigillo e la spina elastica (18). Sfilare la leva (20).
- Svitare il manicotto (17) e togliere l'albero di comando (19).
- Fare attenzione alla guarnizione (21).
- Svitare il cappello (14).

7 - DISASSEMBLING OF SAFETY VALVES.

7.1 - Disassembling of safety valves with lever, types:
CS30/GF.L - CS30/AF.L - CS30/IF.L (Fig.1)
CS30/GS.L - CS30/AS.L - CS30/IS.L (Fig.2).

- Take off the seal, if any, and split pin.
- Slip off the lever pin (item 15) and the lever (item 19).
- Turn the cap locking screw out (item 20) and take off the cap (item 18).
- Release the lock nut (item 17) and remove it from the stem (item 10) Unscrew the nut (item 16).
- Take off the seal, if any, and unscrew the ring pin (item 21).
- Turn the adjusting ring (item 3) rightwards until it gets contact with the disc (item 4); count and note separately how many notches the ring was moved, since when reassembling, it must be reset in the initial position.
- Unloose the lock nut (item 14) and unscrew the compression screw (item 13) counter-clockwise counting the number of turns until the spring is fully released.
- Tighten the valve body in a vice and unloose the connection between valve body and bonnet by using, always and only, a strap-wrench (never use a pipe-wrench or any other pipe-fitter wrench, as body could go damaged).
- Turn the bonnet out of the valve body.
- Remove the disc (item 4) out of the stem.
- Slip off stem-washers-spring unit.
- Care should be taken that the two semi-rings (item 5) are not going lost, because when spring is unloaded, they could slip off their seat.
- Turn the adjusting ring (item 3) out of the valve body (item 1 of Fig.1 or item 22 of Fig.2).

7.2 - Disassembling of safety valves with sealed lifting lever, types:
CS31/GF.L - CS31/AF.L - CS31/IF.L (Fig.3)
CS31/GS.L - CS31/AS.L - CS31/IS.L (Fig.5)

- Take off the seal, if any, the lever pin (item 18) and the lever (item 20).
- Unscrew the sleeve (item 17) ant take off the control shaft (item 19).
- Take care of the gaskets (item 21).
- Unscrew the cap (item 14).
- Release the lock nut (item 16) and remove it from the stem (item 10).
- Take off the seal, if any, and unscrew the ring pin (item 25).
- By means of a screwdriver or a pointed tool turn the

- Sbloccare il controdado (16) e smontarlo dall'asta (10).
- Svitare il dado (15).
- Togliere l'eventuale sigillo e svitare la vite di fermo (25).
- Girare l'anello di regolazione (3) verso destra fino a che tocchi il tappo (4) contando e segnando a parte il numero delle tacche corrispondenti allo spostamento dell'anello, poichè al rimontaggio esso dovrà essere riportato nella posizione iniziale.
- Allentare il controdado (12) e svitare la vite di taratura (13) (nel senso antiorario) contando il numero dei giri fino a molla completamente scaricata.
- Serrare il corpo valvola (1) in morsa e allentare la connessione fra corpo valvola e incastellatura (8) utilizzando sempre e solo una chiave a nastro (non usare mai i giratubi, o qualsiasi altra chiave da idraulico, poichè si potrebbe danneggiare l'incastellatura).
- Svitare completamente l'incastellatura (8) dal corpo valv.(1).
- Togliere il tappo (4).
- Sfilare il complesso asta-piattelli-molla. Fare attenzione che i due semianelli (24) non vadano persi, poichè a molla scaricata potrebbero uscire dalla loro sede.
- Svitare l'anello di regolazione (3) dal corpo-sede (1).

7.3 - Smontaggio delle valvole di sicurezza senza leva di sollevamento, tipi:

CS 31/GF - CS 31/AF - CS 31/IF (Fig.4)
CS 31/GS - CS 31/AS - CS 31/IS (Fig.6).

- Togliere l'eventuale sigillo e svitare il cappello (28) di Fig.4 o (27) di Fig.6.
- Togliere l'eventuale sigillo e svitare la vite di fermo (25).
- Girare l'anello di regolazione (3) verso destra fino a che tocchi il tappo (4), contando e segnando a parte il numero delle tacche corrispondenti allo spostamento dell'anello, poichè al rimontaggio esso dovrà essere riportato nella posizione iniziale.
- Allentare il controdado (12) e svitare la vite di taratura (13) (nel senso antiorario) contando il numero dei giri fino a molla completamente scaricata.
- Serrare il corpo valvola (1) in morsa e allentare la connessione fra corpo valvola e incastellatura (8) utilizzando sempre e solo una chiave a nastro (non usare mai i giratubi, o qualsiasi altra chiave da idraulico, poichè si potrebbe danneggiare l'incastellatura).
- Svitare completamente l'incastellatura pos. 8 dal corpo valvola (1).
- Togliere il tappo (4).
- Sfilare il complesso asta-piattelli-molla. Fare attenzione che i due semianelli (24) non vadano persi, poichè a molla scaricata potrebbero uscire dalla loro sede.
- Svitare l'anello di regolazione (3) dal corpo-sede (1).

adjusting ring (item 3) rightwards until it gets contact with the disc (item 4); count and note separately how many notches the ring was moved, since when reassembling, it must be reset in the initial position.
- Unloose the lock nut (item 12) and unscrew the compression screw (item 13) counter-clockwise counting the number of turns until the spring is fully released.
- Tighten the valve body (item 1) in a vice and unloose the connection between valve body and bonnet (item 8) by using, always and only, a strap-wrench (never use a pipe-wrench or any other pipe-fitter wrench, as body could go damaged).
- Turn the bonnet (item 5) out of the valve body (item 1).
- Remove the disc (item 4).
- Slip off stem-washers-spring unit.
- Care should be taken that the two semi-rings (item 24) are not going lost, because when spring is unloaded, they could slip off their seat.
- Turn the adjusting ring (item 3) out of the valve body (item 1).

7.3 - Disassembling of safety valves without lifting lever types:

CS31/GF - CS31/AF - CS31/IF (fIG.4)
CS31/GS - CS31/AS - CS31/IS (fIG.6).

- Take off the seal, if any, and remove the cap (item 28 of Fig.4 or item 27 of Fig.6).
- Take off the seal, if any, unscrew the ring pin (item 25) and turn the adjusting ring (item 3) to the right until it touches the disc (item 4).
- Count and note separately how many notches the ring was moved, because, when reassembling, it must be reset in the original position.
- Turn the lock nut (item 12) out, and turn compression screw (item 13) counter clockwise (taking note of the number of turns) just until the spring is released.
- Grip the valve body (item 1) in a vice and release the joint between the valve body and the bonnet (item 8) by using, always and only, a strap wrench (never use a pipe-wrench or any other pipe-fitter wrench, as body could go damaged).
- Turn the bonnet (item 8) out of the valve body (item 1).
- Remove the disc (item 4).
- Slip off stem-washers-spring unit.
- Care should be taken that the two semi-rings (item 24) are not going lost, because when spring is unloaded, they could slip off their seat.
- Turn the adjusting ring (item 3) out of the valve body.

8 - LAPPATURA DELLE SEDI.

Per ripassare le superfici di tenuta del tappo e della sede usare un anello liscio di ghisa.

Non usare mai il tappo per la lappatura della sede, ma servirsi del suddetto anello liscio di ghisa.

La pasta abrasiva al carburo di silicio da usare per la lappatura è la "VIKI 600-800-1000" (reperibile presso la Ditta PAMPADO, V.le Epinasse, 81 - Milano, oppure la ditta BIFFI, Via Cavour, 78 - Novate Milanese - Mi).

Il numero indicato rappresenta la grana della pasta.

Il tipo 600 viene usato per la sgrossatura, il tipo 800 per la finitura ed il tipo 1000 per la lucidatura.

La lappatura di un ugello piano è estremamente facile; non è necessaria alcuna particolare preparazione e la tecnica viene appresa dopo pochi minuti di lavoro.

Se si avrà l'avvertenza di seguire le seguenti norme, chiunque sarà in grado di fare una perfetta lappatura:

1) - tenere i pezzi ben puliti;
2) - rinnovare frequentemente lo smeriglio sull'anello per la lappatura;
3) - applicare sull'anello per la lappatura uno strato sottilissimo di pasta abrasiva. Si eviterà in tal modo l'arrotondamento del bordo della sede;
4) - nel procedere alla lappatura della sede, porre attenzione a che l'anello per la smerigliatura non cada su di essa provocando ammaccature;
5) - procedere alla lappatura usando, con moto alternativo, l'anello apposito in tutte le direzioni, premendo uniformemente e ruotando l'anello lentamente. Nella lappatura del tappo l'anello deve essere tenuto fermo, muovendo il tappo nel modo sopra specificato;
6) - sostituire frequentemente la pasta dopo aver tolto quella vecchia;
7) - per controllare la lappatura effettuata sulla sede, togliere tutta la pasta abrasiva dalla medesima e dall'anello lappatore.

Lucidare la sede con lo stesso anello ben pulito, usando i movimenti sopra descritti per la lappatura. Se ci sono degli avvallamenti sulla superficie di tenuta, essi compariranno come ombreggiature in contrasto con la parte lucidata. In tal caso è necessaria un'ulteriore lappatura.

Tenere presente che per effettuare una buona lappatura devono essere sempre usati anelli lappatori con superfici assolutamente piane; per rimuovere ombreggiature sono necessari solo pochi minuti di lappatura;

8) - quando la lappatura è portata al termine, se appaiono delle linee radiali, queste possono essere eliminate ruotando l'anello lappatore intorno al suo asse, dopo avere tolta tutta la pasta abrasiva.

8 - SEAT LAPPING.

In order to lap tightness surfaces of the disc and of the seat, use a flat cast iron ring (lap).

Never use the disc to lap the seat, but use only the above said cast iron lap.

The abrasive paste of silicon carbide to be used for lapping is VIKI 600 - 800 - 1000 (available by PAMPADO V.le Epinasse 81 - Milano or by BIFFI Via Cavour 78 - Novate Milanese/MI).

The number indicated means the grain of the paste: type 600 is used for rough grinding; type 800 for finishing and type 1000 for polishing.

The lapping of a flat nozzle is easy: one does not need any special training and learns to carry it out in a few minutes; if one follows our suggestions, he will be surely able to carry out a perfect lapping:

1) - keep the piece very clean.
2) - often renew emery on lapping ring.
3) - put on the lapping ring a very thin layer of abrasive paste -in this way you will avoid rounding off the seat edge
4) - going on lapping the seat, be careful that ring is not falling on it, to avoid dents.
5) - go on lapping by using, with reciprocating motion, the proper ring in all directions, pressing uniformly and rotating the ring slowly.

When lapping the disc the ring must be kept still, the disc must be moved in the above mentioned way.

6) - replace often the paste after removing the old one.
7) - in order to check the lapping (just made) of the seat, remove all the abrasive paste from the seat and the lapping ring.

Polish the seat with the same ring, carefully cleaned, moving it as for lapping.

Should be there some depression on the seal surface, you will see something like shadings in contrast with the shining part.

In that case more lapping would be necessary.

Remember that to make a good lapping you must always use lapping rings with quite flat surfaces.

You need only a few minutes of lapping to remove shadings.

8) - when lapping is over, if there are still some radial lines, it is enough, to eliminate them, to revolve the lapping ring about its axis, after having removed all the abrasive paste.

Wash carefully the seal seats with kerosene, light oil or carbon tetrachloride and clean them with tissue paper or unfrayd cloth.

If dents on the seats or on the disc should be such as to need a lapping deeper than 0.25 mm, it is advisable for you

Lavare accuratamente le sedi di tenuta con kerosene, olio leggero, oppure tetracloruro di carbonio e pulire con carta velina o con panno privo di sfilacciature.

Se le intaccature sulla sede o sul tappo fossero tali da richiedere una lappatura profonda più di 0,25 mm è consigliabile restituire la valvola alla Carraro per la riparazione, a meno che non si disponga sul luogo di un'officina attrezzata per effettuare l'operazione di ripristino.

Tenere presente che nella tornitura tutti i profili devono essere riprodotti fedelmente, senza di che la valvola di sicurezza non funzionerebbe più regolarmente.

9 - TAPPI A TENUTA ELASTICA.

Quando i tappi sono dotati di tenuta elastica le sedi metalliche sul corpo si conservano in buono stato più facilmente. Se sono segnate o usurate vale quanto detto al paragrafo precedente.

Le guarnizioni elastiche del tappo, se segnate o incavate o comunque deteriorate, debbono essere sostituite, con semplice ed evidente operazione.

10 - RIMONTAGGIO VALVOLE DI SICUREZZA.

10.1 - Rimontaggio delle valvole con leva di sollevamento, tipi:

CS 30/GF.L - CS 30/AF.L - CS 30/IF.L (Fig.1)
CS 30/GS.L - CS 30/AS.L - CS 30/IS.L (Fig.2).

- Avvitare l'anello di regolazione (2) sul corpo-sede (1) di Fig.1 o (22) di Fig.2 (la testa dell'anello deve essere al livello della sede).
- Lubrificare i piattelli molla (7 e 12) sulla parte conica (che sono a contatto rispettivamente con il pistone e la vite di taratura), l'estremità inferiore dell'asta (10) in contatto con il tappo (4) e la parte inferiore interna della vite (13).
- Infilare il complesso asta-piattelli-molla facendo attenzione che i due semianelli (5) siano ben inseriti nella loro sede.
- Montare il tappo (4) sull'asta (10).
- Avvitare il corpo-sede(1) sull'incastellatura(9) bloccandolo
- Avvitare la vite di taratura (13) fino ad eliminarne qualsiasi gioco e quindi aggiungere lo stesso numero di giri occorsi per sollevare la compressione quando la valvola è stata smontata.
- Serrare il controdado (14).
- Rimettere nella posizione iniziale l'anello di regolazione (3) agendo come segue:

a) - Usando un attrezzo molto appuntito girare lentamente l'anello verso destra fino a che tocchi il tappo (4).
b) - Girare l'anello verso sinistra contando lo stesso numero

to send the valve back to CARRARO for repairing, unless you have at your disposal a workshop with proper facilities for repairing.

Keep in mind that all profiles of parts must be preserved otherwise the safety valve would no more regularly operate.

9 - RESILIENT TIGHTNESS DISCS.

When the discs are equipped with resilient tightness gaskets, the metal seats on the body remain more easily in good condition.

If they are signed or weared, the preeceding paragraph is applicable. The resilient gasket of the disc, if scratched or grooved or however weared, should be replaced, with simple and obvious operation.

10 - REASSEMBLING OF SAFETY VALVES.

10.1 - Reassembling of safety valves with lifting lever, types:

CS30/GF.L - CS30/AF.L - CS30/IF.L (Fig.1)
CS30/GS.L - CS30/AS.L - CS30/IS.L (Fig.2).

- Screw the adjusting ring (item 2) on the body (item 1 of Fig.1, or item 22 of Fig.2). The ring head must be at the seat level.
- Lubricate the spring washers (item 7 and 12) on the taper parts (which are in contact with the piston and the compression screw), the lower part of the stem (item 10), in contact with the disc (item 4) and the lower internal part of the compression screw (item 13).
- Slip on the stem-washers-spring unit taking care that the two semi-rings (item 5) are well placed in their housing.
- Fit again the disc (item 4) on the stem (item 10)
- Screw the body (item 1) on the bonnet (item 9) and lock it.
- Turn on the compression screw (item 13) until there is no clearance. Then add the same number of turns, required to relieve the compression, when the valve was disassembled.
- Tighten the lock nut (item 14).
- Replace the adjusting ring (item 3) in the initial position, by using the following procedure:
a) - by means of a screwdriver or pointed tool, move the ring slowly rightwards until it reaches the disc (item 4)
b) - counting the notches, turn the ring leftwards until it is in the initial position as before disassembling.
- Screw the ring pin (item 21) and reset the seal, if any.
- Assemble the nut (item 16) and the lock nut (item 17).

di tacche conteggiate in precedenza nello smontare la valvola, in modo da riportarlo nella posizione iniziale.
- Avvitare la vite di riferimento (21) e ripristinare l'eventuale sigillo.
- Montare il dado (16) e il controdado (17).
- Montare provvisoriamente il cappello (18) e la leva (19) controllando che fra il dado (16) e la leva ci sia un gioco di 1,5 mm circa.
- Dopo accertato quanto sopra bloccare il dado ed il controdado (16 e 17).
- Montare definitivamente il cappello, la leva, il perno (15) e la copiglia.
- Ripristinare l'eventuale sigillo a garanzia della taratura.

10.2 - Rimontaggio delle valvole con leva di sollevamento a tenuta, tipi:

CS 31/GF.L - CS 31/AF.L - CS 31/IF.L (Fig.3)
CS 31/GS.L - CS 31/AS.L - CS 31/IS.L (Fig.5).

- Avvitare l'anello di regolazione (3) sul corpo-sede (la testa dell'anello deve essere al livello della sede).
- Lubrificare i piattelli molla (7 e 11) sulla parte conica (che sono a contatto rispettivamente con il pistone e la vite di taratura), l'estremità inferiore dell'asta (10) in contatto con il tappo (4) e la parte inferiore interna della vite (13).
- Infilare il complesso asta-piattelli-molla facendo attenzione che i due semianelli (24) siano ben inseriti nella loro sede.
- Montare il tappo (4) sull'asta (10).
- Avvitare il corpo-sede sull'incastellatura (8) bloccandolo.
- Avvitare la vite di taratura (13) fino ad eliminarne qualsiasi gioco e quindi aggiungere lo stesso numero di giri occorsi per sollevare la compressione quando la valvola è stata smontata.
- Serrare il controdado (12).
- Rimettere nella posizione iniziale l'anello di regolazione (3) agendo come segue:

a) - Usando un attrezzo molto appuntito girare lentamente l'anello verso destra fino a che tocchi il tappo (4).
b) - Girare l'anello verso sinistra contando lo stesso numero di tacche conteggiate in precedenza nello smontare la valvola, in modo da riportarlo nella posizione iniziale.

- Avvitare la vite di riferimento (25) e ripristinare l'eventuale sigillo.
- Montare il dado (15) e il controdado (16) in modo che il piano inferiore del dado sia posto rispetto al piano di appoggio sulla incastellatura (vedi quota A, Fig.3 e 5), come segue:

Orifici D - E:	quota A = 36 mm
Orifici F - G:	quota A = 52 mm
Orifici H - J:	quota A = 60 mm

- Avvitare il cappello (14) fino a battuta della guarnizione (22) (controllare che non sia danneggiata) posizionandolo in

- Assemble temporarily the cap (item 18) and the lever (item 19) checking that there is at least a clearance of 1.5 mm abt. between the nut and the lever.
- Lock the nut and the lock nut (items 16 and 17).
- Assemble finally the cap, the lever, the lever pin (item 15) and the split pin.
- Put again the seal, if any, to cover set warranty.

10.2 - Reassembling of safety valves with packed lever, types:

CS31/GF.L - GS31/AF.L - CS31/IF.L (Fig.3)
CS31/GS.L - CS31/AS.L - CS31/IS.L (Fig.6).

- Screw the adjusting ring (item 3) on the body. The ring head must be at the seat level.
- Lubricate the spring washers (item 7 and 11) on the taper parts (which are in contact with the piston and the compression screw), the lower part of the stem (item 10), in contact with the disc (item 4) and the lower internal part of the compression screw (item 13).
- Slip on the stem-washers-spring unit taking care that the two semi-rings (item 24) are well placed in their housing.
- Fit again the disc (item 4) on the stem (item 10).
- Screw the body on the bonnet (item 8) and lock it.
- Turn on the compression screw (item 13) until there is no clearance. Then add the same number of turns, required to relieve the compression, when the valve was disassembled.
- Tighten the lock nut (item 12).
- Replace the adjusting ring (item 3) in the initial position, by using the following procedure:
a) - by means of a screwdriver or pointed tool, move the ring slowly rightwards until it reaches the disc (item 4).
b) - counting the notches, turn the ring leftwards until it is in the first position as before disassembling.
- Screw the ring pin (item 25) and reset the seal, if any.
- Fit the nut (item 15) and the lock nut (item 16) so that the lower nut surface (item 15) is placed at a distance from yoke face (see dimension A on Fig,.3 and 5) as follows:

Orifice D and E :	*A = 36 mm*
Orifice F and G :	*A = 52 mm*
Orifice H and J :	*A = 60 mm*

- Screw the cap (item 14) till the gasket compression (item 22) (check that it is not damaged) placing it so that the screwed hole for the lever is on the opposite side of the valve discharge.
- Reassemble the various parts of the lever (item 17 to 21) paying attention that the gasket (item 21) is not damaged and that the control shaft cam is turned downwards with a clearance of 1.5 mm abt. with the nut (item 15) ; you can

modo che il foro filettato per la leva capiti sul lato opposto allo scarico della valvola.
- Rimontare le varie parti della leva (17÷21), facendo attenzione a che la guarnizione di tenuta (21) non sia danneggiata e che la camma dell'albero di comando sia rivolta verso il basso con un gioco di 1,5 mm circa con il dado (15).

Tutto ciò è facilmente controllabile poichè la leva deve muoversi per un breve tratto senza sforzo.
- Ripristinare l'eventuale sigillo a garanzia della taratura.

10.3 - Rimontaggio delle valvole di sicurezza senza leva di sollevamento, tipi:

CS 31/GF - CS 31/AF - CS 31/IF (Fig.4)
CS 31/GS - CS 31/AS - CS 31/IS (Fig.6).

- Avvitare l'anello di regolazione (3) sul corpo-sede (la testa dell'anello deve essere al livello della sede).
- Lubrificare i piattelli molla (7 e 11) sulle parti coniche (che sono a contatto rispettivamente con il pistone e la vite di taratura), l'estremità inferiore dell'asta (10) (in contatto con il tappo (4) e la parte inferiore interna della vite (13).
- Infilare il complesso asta-piattelli-molla facendo attenzione che i due semianelli (24) siano ben inseriti nella loro sede.
- Montare il tappo (4) sull'asta (10).
- Avvitare il corpo-sede sull'incastellatura (8) bloccandolo.
- Avvitare la vite di taratura (13) fino ad eliminare qualsiasi gioco e quindi aggiungere lo stesso numero di giri occorsi per sollevare la compressione quando la valvola è stata smontata.
- Serrare il controdado (12) e rimontare il cappello fino a battuta della guarnizione.
- Rimettere nella posizione iniziale l'anello di regolazione (3) agendo come segue:

a) - Usando un attrezzo molto appuntito girare lentamente l'anello verso destra fino a che tocchi il tappo (4).
b) - Girare l'anello verso sinistra contando lo stesso numero di tacche conteggiate in precedenza nello smontare la valvola, in modo da riportarlo nella posizione iniziale.
- Avvitare la vite di riferimento (25) e ripristinare l'eventuale sigillo.

10.4 - Controllo delle guarnizioni.

Durante il rimontaggio verificare l'efficienza delle guarnizioni esistenti e, ove necessario, sostituirle.

11 - CONTROLLO PERIODICO DELLE VALVOLE DI SICUREZZA.

Per assicurarsi che le valvole di sicurezza continuino ad essere in buona efficienza di esercizio, esse devono venire provate periodicamente.

easily check it since the lever has to move for a short distance without effort).
- Reset the seal, if existing, to guarantee the setting.

10.3 - Reassembling of safety valves without lifting lever, types:

CS31/GF - CS31/AF - CS31/IF (Fig.4)
CS31/GS - CS31/AS - CS31/IS (Fig.6).

- Screw the adjusting ring (item 3) on the body. The ring head must be at the seat level.
- Lubricate the spring washers (item 7 and 11) on the taper parts (which are in contact with the piston and the compression screw), the lower part of the stem (item 10), in contact with the disc (item 4) and the lower internal part of the compression screw (item 13).
- Insert the stem-washers-spring assembly; pay attention that the two semi-rings (item 24) are well placed in their housing.
- Place the disc (item 4) on the stem (item 10)
- Place the body already complete with the ring on the bonnet (item 8) and fasten it.
- Turn on the compression screw (item 13) until there is no clearance left. Then add the same number of turns, required to relieve the compression, when the valve was disassembled.
- Tighten the lock nut (item 12) and reassemble the cap till gasket compression.
- Replace the adjusting ring (item 3) in the initial position, by using the following procedure:
a) - by means of a screwdriver or pointed tool, move the ring slowly rightwards until it reaches the disc (item 4)
b) - by counting the notches, turn the ring leftwards until it is in the initial position as before disassembling.
- Screw the ring pin (item 25) checking that it freely gets in.
- Reset the seal, if any.

10.4 - Control of gaskets.

While reassembling check the efficiency of existing gaskets and, when necessary, replace them.

11 - PERIODICAL TESTING OF SAFETY VALVES.

To ensure smooth and continuos operation of safety valves, they should be periodically tested.

To this aim they shall be manually opened by means of the lifting lever; during the tests the plant pressure must be at least 80% of the valve setting pressure; opening must be brief and not repeated.

A tale scopo esse verranno aperte manualmente e fatte scattare mediante leva di sollevamento; durante queste prove la pressione nell'apparecchio deve essere almeno l'80% di quella di taratura della valvola; l'apertura deve essere breve e non ripetuta.

La periodicità dipende dalle condizioni di impianto (maggiore o minore probabilità che la valvola si sporchi) per impianti puliti ogni tre mesi circa.

In caso di fermata dell'apparecchio protetto si consiglia di effettuare il controllo subito prima della fermata per poter approfittare di essa per le operazioni di manutenzione di cui si mettesse in evidenza la necessità.

Per le valvole non dotate di leva il conduttore dell'impianto dovrà verificare periodicamente il funzionamento, facendo aumentare la pressione agente sulla valvola, secondo le disponibilità dell'impianto.

12 - PEZZI DI RICAMBIO.

Per riordinare pezzi di ricambio, indicare il numero di matricola della valvola, il tipo, la dimensione e la pressione di taratura della valvola e se viene usata con vapore saturo o surriscaldato, o altro fluido.

Ogni disegno in sezione delle valvole riporta le parti di ricambio da noi consigliate da tenere a magazzino per affrontare una riparazione rapida.

13 - CONTROLLO E MANUTENZIONE DELLE MOLLE MONTATE SULLE VALVOLE DI SICUREZZA.

Le molle delle valvole di sicurezza sono protette in superficie da un trattamento o da un rivestimento adatto alla situazione ambientale indicata dal cliente all'atto della richiesta e dell'ordine.

Se non viene data nessuna speciale indicazione, si presume che l'ambiente di installazione sia quello normale degli stabilimenti industriali con atmosfera non aggressiva, o delle centrali termiche, o delle normali installazioni civili.

Se montate all'aperto, si presume che le valvole siano comunque difese dall'attacco degli agenti atmosferici.

Le molle sono normalmente alluminizzate o protette con vernice all'alluminio.

Esse possono restare in servizio per molti anni senza risultare particolarmente danneggiate o attaccate.

Durante le periodiche manutenzioni agli impianti si dovrà controllare accuratamente lo stato di conservazione delle superfici delle molle.

Se la protezione superficiale è intaccata, spazzolare

The period choosen for the test dipends on the plant conditions (more or less possibilities that the valve gets dirty); for clean plants, every three months about.

In case of protected plant stop, we suggest checking the valves just before the stop in order to take advantage of it for requested maintenance operations which are put in evidence.

For the valves without lifting lever the plant operator should periodically check the operation, letting increase the pressure which acts on the valve, accordingly with the plant possibility.

12 - SPARE PARTS.

When ordering spare parts, state serial number, type, size and set pressure of the valve, and whether it is used with saturated steam or superheated steam or any other medium.

Every section drawing of the valves shows the recommended spare parts to be kept in stock to quickly face the most common dificulties.

13 - INSPECTION AND MAINTENANCE OF SAFETY VALVES SPRINGS.

The springs of safety valves are protected on their surface by a treatment or a coating fit for the environmental situation which has been specified by the customer when inquiring or ordering.

If no special notice is given, the installation environment is presumed to be the normal one of industrial plants with non aggressive atmosphere, or of power stations, or of standard civil installation.

When in outdoor installation, the safety valves are presumed to be protected against any offence from atmosphere.

When for liquid service they are supposed to be used for clean water or non aggressive liquids.

For these applications we generally use aluminized or aluminium paint protected springs.

They may normally be kept on service for a number of years without getting damaged or even etched.

While carrying out the valve periodical maintenance, it is important to check the state of spring surface conservation.

If the surface protection is etched, accurately brush the surface and restore the protection.

For this purpose we may suggest to use the paint Carboline No.4631 (APSA Milano).

If the experience shows a tendency for the local atmosphere to etch the protection rather quickly, the painted

accuratamente la superficie e ripristinare la protezione. Per tale scopo possiamo consigliare l'uso della vernice Carboline N° 4631 (APSA - Milano).

Se l'esperienza mette in evidenza che l'atmosfera locale tende ad intaccare la protezione con una certa rapidità, si può ulteriormente proteggere la superficie verniciata con uno strato di grasso protettivo resistente a temperatura.

Possiamo suggerire il NASP (Tecnotrade) che è un composto sia lubrificante che protettivo contro la corrosione, resistente a qualunque temperatura anche elevatissima.

Vernice e grasso possono essere eventualmente forniti anche dalla Carraro.

Le molle inserite entro un coperchio chiuso ed esposte a sbalzi di temperatura con conseguente possibilità di condensazione di umidità sulle superfici interne, oppure quelle esposte ad essere bagnate dai liquidi contenuti, sono più suscettibili di danneggiamento e dovranno quindi essere controllate con maggior frequenza.

Si tenga presente che la ruggine o la corrosione provocano a lungo andare una riduzione della resistenza della molla, e la costituzione di localizzazione di sforzi concentrati, con la conseguente creazione di punti di incipiente rottura, che possono provocare il cedimento della molla.

Il controllo della buona conservazione della superficie della molla e la sua manutenzione sono quindi essenziali per la conservazione dell'efficienza della valvola di sicurezza.

NOTA BENE:
Abbiamo già messo in evidenza che prima di accingersi a smontare una valvola, per eseguire operazioni di manutenzione, occorre verificare la disponibilità delle parti di ricambio consigliate.

E' IMPORTANTE che dopo ogni operazione venga subito ripristinata la scorta, riapprovvigionando tutte le parti che sono state utilizzate.

ATTENZIONE:
Qualora si debbano eseguire saldature sulle tubazioni, evitare di collegare la presa di terra sulla valvola, poichè importanti parti scorrevoli potrebbero essere danneggiate.

surface may furtherly be protected by a layer of a protective, heat resistant compound.

We may suggest NASP (Tecnotrade) which is both a lubricant and anticorrosion protective compound, able to bear any temperature, even very high.

Paint and grease may be eventually supplied by Carraro.

The springs fit within a closed bonnet and subject to changes of temperature which may generate himidity condensation on the internal surfaces, or the ones which may be wet by the process liquids, are more subject to be etched and damaged, and shall be therefore more frequently checked.

Consideration must be given to the fact that rust or corrosion promote in the time a reduction of the spring resistance, and may determine the creation of stress increase, soon or later resulting in the spring failure. Monitoring of spring surface conservation and its regular maintenance are therefore essential for the preservation of the safety valve efficiency.

ATTENTION:
We have already put in evidence that before starting to disassemble a valve for maintenance it is necessary to check whether the suggested spare parts are available.

***IT IS IMPORTANT** that after each maintenance operation the stock of spares in warehouse is rebuilt, by procuring again all those which have been used.*

ATTENTION:
If any welding has to be made on the piping do not connect the ground top on the valve, as important sliding parts could be damaged.

La CARRARO si riserva il diritto di modificare in qualsiasi momento e senza preavviso, le caratteristiche dei prodotti qui illustrati.
CARRARO reserves the right to modify the characteristics of here described products at any time and without notice.

Per richiedere parti di ricambio citare sempre il numero di matricola stampigliato sulla targhetta applicata alla valvola.

To ask for spare parts always mention the serial number which is stamped on the tag fixed on the valve.

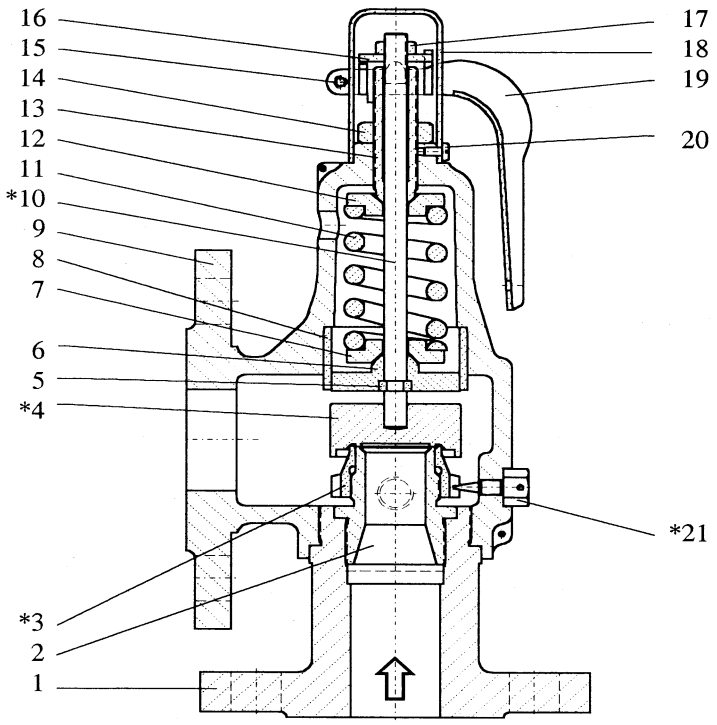

Fig.1 - **Valvola tipo CS 30 (Attacchi flangiati)**
CS 30 type valve (Flanged ends)

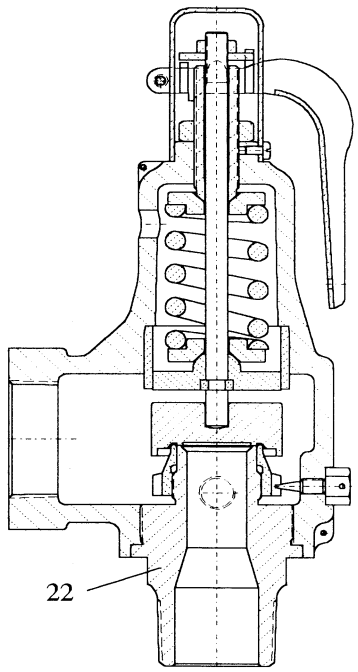

Fig.2 - **Valvola tipo CS 30 (Attacchi filettati)**
CS 30 type valve (Screwed ends)

PART. "A" - **TAPPI A TENUTA ELASTICA**
RESILIENT TIGHTNESS DISC

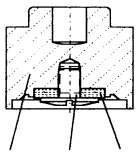

*23 *24 *25

Per orifici tipo:
For orifice type:
" D - E - F "

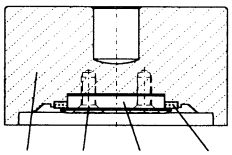

*26 *27 *28 *29

Per orifici tipo:
For orifice type:
" G - H - J "

1 - Corpo valvola / *Valve body*
2 - Sede / *Nozzle*
*3 - Anello regolazione / *Adjusting ring*
*4 - Tappo / *Disc*
5 - Anello per asta / *Stem ring*
6 - Pistone / *Piston*
7 - Piattello inferiore / *Lower washer*
8 - Guida / *Guide*
9 - Incastellatura / *Bonnet*
*10 - Asta / *Stem*
11 - Molla / *Spring*
12 - Piattello superiore / *Upper washer*
13 - Vite di taratura / *Compression screw*
14 - Controdado / *Lock nut*
15 - Perno leva / *Lever pin*
16 - Dado per asta / *Stem nut*
17 - Dado / *Nut*
18 - Cappello / *Cap*
19 - Leva / *Lever*
20 - Vite / *Screw*
*21 - Vite anello regolaz. / *Adjusting ring pin*
22 - Corpo-Sede / *Nozzle-body*
*23 - Tappo / *Disc*
*24 - Vite guarnizione / *Gasket screw*
*25 - Guarnizione / *Gasket*
*26 - Tappo / *Disc*
*27 - Vite / *Screw*
*28 - Piattello guarnizione / *Gasket plate*
*29 - Guarnizione / *Gasket*

* RICAMBI CONSIGLIATI / *RECOMMENDED SPARE PARTS*
N.B.:I gruppi di partic.(23, 24, 25) e (26, 27, 28, 29) sono fornibili in unico set.
Note: *Part units (23, 24, 25) and (26, 27, 28, 29) are supplied in one set only.*

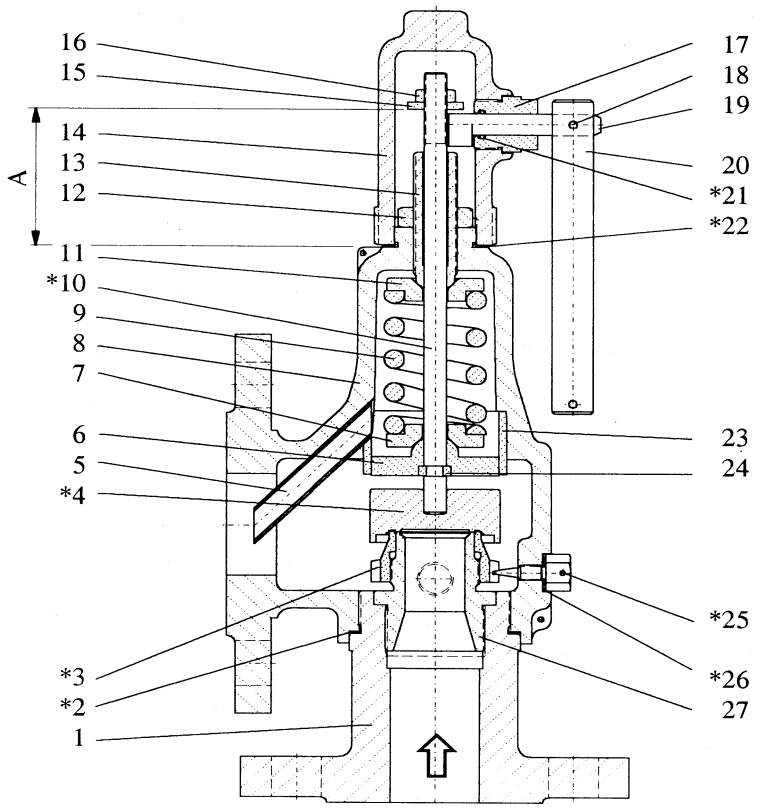

Fig.3 - **Valvola tipo CS 31 (Con leva)**
CS 31 type valve (With lever)

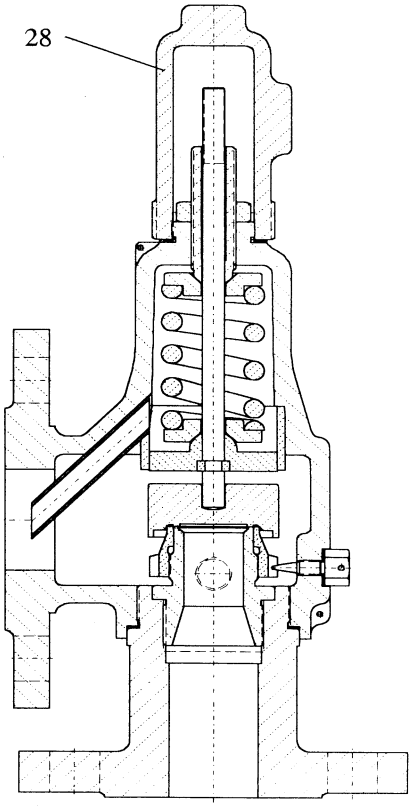

Fig.4 - **Valvola tipo CS 31 (Senza leva)**
CS 31 type valve (Without lever)

1 - Corpo valvola / *Valve body*
*2 - Guarnizione / *Gasket*
*3 - Anello regolaz. / *Adjusting ring*
*4 - Tappo / *Disc*
5 - Tubo eiettore / *Eductor tube*
6 - Pistone / *Piston*
7 - Piattello infer. / *Lower washer*
8 - Incastellatura / *Bonnet*
9 - Molla / *Spring*
*10 - Asta / *Stem*
11 - Piattello superiore / *Upper washer*
12 - Controdado / *Lock nut*
13 - Vite di taratura / *Compression screw*
14 - Cappello / *Cap*
15 - Dado per asta / *Stem nut*
16 - Dado / *Nut*
17 - Manicotto / *Sleeve*
18 - Perno leva / *Lever pin*
19 - Albero comando / *Control shaft*
20 - Leva / *Lever*
*21 - Guarnizione / *Gasket*
*22 - Guarnizione / *Gasket*
23 - Guida / *Guide*
24 - Anello per asta / *Stem ring*
*25 - Vite anello regolazione / *Adjusting ring pin*
*26 - Guarnizione / *Gasket*
27 - Sede / *Nozzle*
28 - Cappello / *Cap*
*29 - Tappo / *Disc*
*30 - Vite guarniz./ *Gasket screw*
*31 - Guarnizione / *Gasket*
*32 - Tappo / *Disc*
*33 - Vite / *Screw*
*34 - Piattello guarn./ *Gasket plate*
*35 - Guarnizione / *Gasket*

* RICAMBI CONSIGLIATI / *RECOMMENDED SPARE PARTS*
N.B.:I gruppi di partic.(29, 30, 31) e (32, 33, 34, 35) sono fornibili in unico set.
Note: *Part units (29, 30, 31) and (32, 33, 34, 35) are supplied in one set only.*

PART."A" - TAPPI A TENUTA ELASTICA
RESILIENT TIGHTNESS DISC

Per orifici tipo:
For orifice type:
" D - E - F "

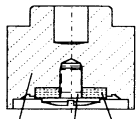

*29 *30 *31

Per orifici tipo:
For orifice type:
" G - H - J "

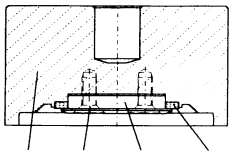

*32 *33 *34 *35

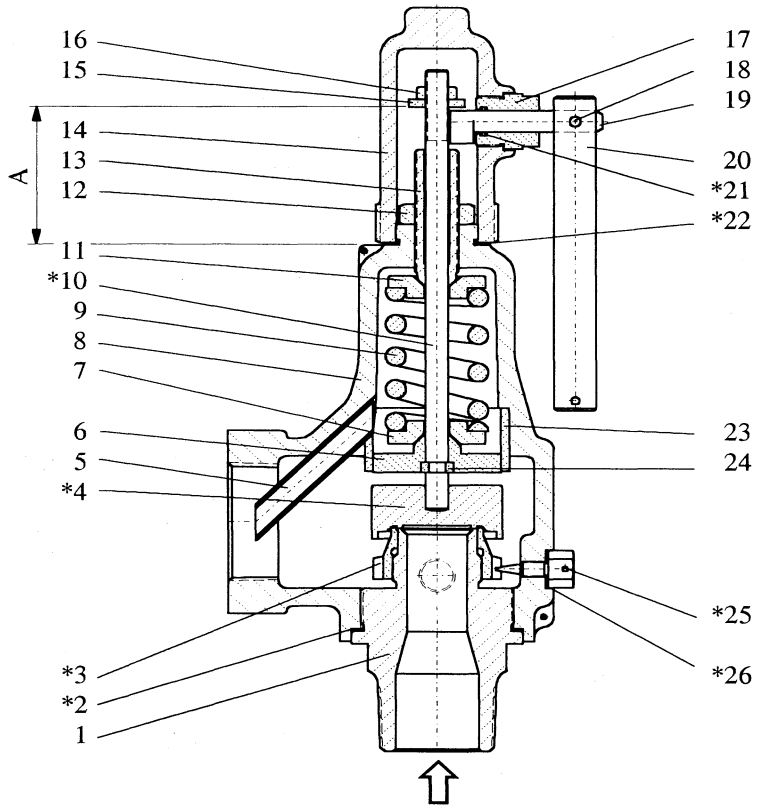

Fig.5 - **Valvola tipo CS 31 (Con leva)**
CS 31 type valve (With lever)

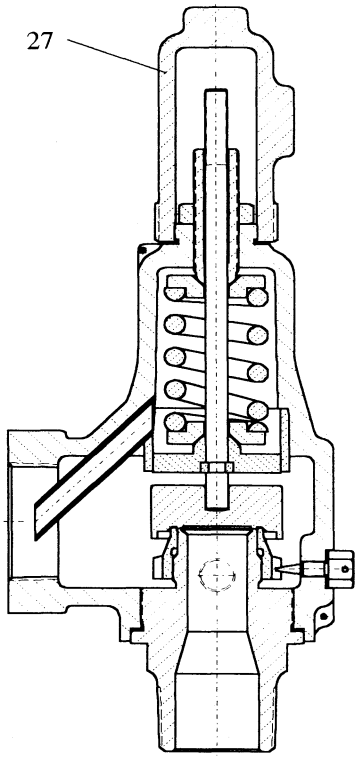

Fig.6 - **Valvola tipo CS 31 (Senza leva)**
CS 31 type valve (Without lever)

1 - Corpo-Sede / *Nozzle-body*
*2 - Guarnizione / *Gasket*
*3 - Anello regolazione / *Adjusting ring*
*4 - Tappo / *Disc*
5 - Tubo eiettore / *Eductor tube*
6 - Pistone / *Piston*
7 - Piattello infer. / *Lower washer*
8 - Incastellatura / *Bonnet*
9 - Molla / *Spring*
*10 - Asta / *Stem*
11 - Piattello superiore / *Upper washer*
12 - Controdado / *Lock nut*
13 - Vite di taratura / *Compression screw*
14 - Cappello / *Cap*
15 - Dado per asta / *Stem nut*
16 - Dado / *Nut*
17 - Manicotto / *Sleeve*
18 - Perno leva / *Lever pin*
19 - Albero comando / *Control shaft*
20 - Leva / *Lever*
*21 - Guarnizione / *Gasket*
*22 - Guarnizione / *Gasket*
23 - Guida / *Guide*
24 - Anello per asta / *Stem ring*
*25 - Vite anello regolazione / *Adjusting ring pin*
*26 - Guarnizione / *Gasket*
27 - Cappello / *Cap*
*28 - Tappo / *Disc*
*29 - Vite guarniz./ *Gasket screw*
*30 - Guarnizione / *Gasket*
*31 - Tappo / *Disc*
*32 - Vite / *Screw*
*33 - Piattello guarnizione/ *Gasket plate*
*34 - Guarnizione / *Gasket*

* RICAMBI CONSIGLIATI / *RECOMMENDED SPARE PARTS*
N.B.:I gruppi di partic.(28, 29, 30) e (31, 32, 33, 34) sono fornibili in unico set.
Note: *Part units (28, 29, 30) and (31, 32, 33, 34) are supplied in one set only.*

PART."A" - TAPPI A TENUTA ELASTICA
RESILIENT TIGHTNESS DISC

Per orifici tipo:
For orifice type:
" D - E - F "

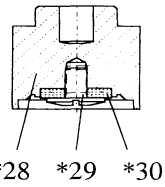

Per orifici tipo:
For orifice type:
" G - H - J "

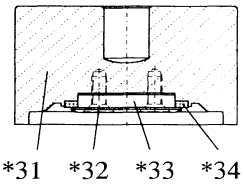

- Fig. 7/A -
Valvole tipo CS30 impiegate con vapori o gas condensabili.
Valves type CS30 for condensable vapors or gas and steam.

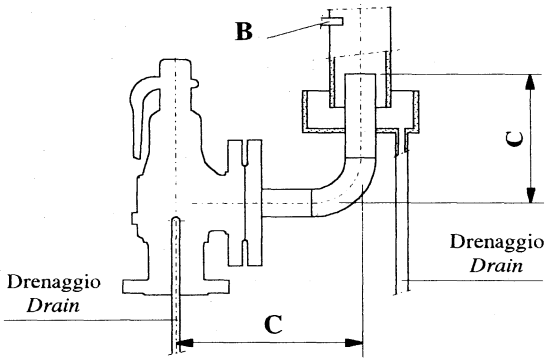

- Fig. 7/B -
Valvole tipo CS30 e 31 impiegate con vapori o gas non condensabili.
Valve type CS30 and CS31 for uncondensable vapors or gas.

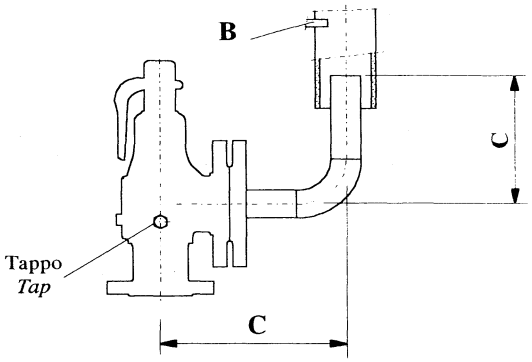

- Fig. 7/C -
Valvole tipo CS31 impiegate con liquidi, acqua calda o surriscaldata.
Valve type CS31 for liquids, hot or superheated water.

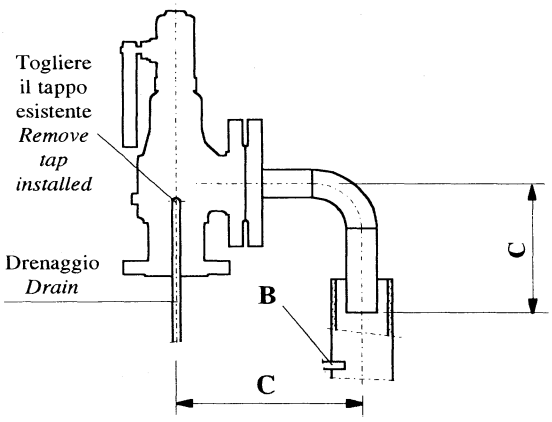

- Fig. 7/D -
Valvole tipo CS31 impiegate con vapori o gas condensabili.
Valve type CS31 for condensable vapors or gas.

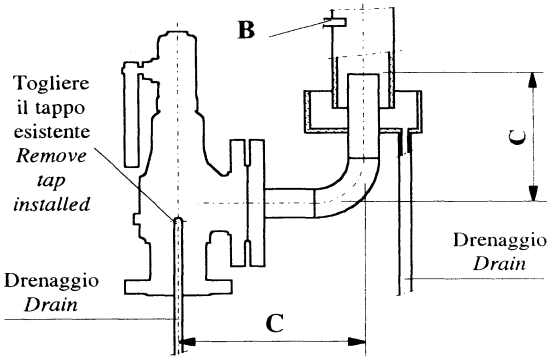

PRESCRIZIONI PER LA TUBAZIONE DI SCARICO

Quota C - più corta possibile (massimo 4 volte il diametro della tubazione di uscita). Nel caso che la tubazione di scarico avesse lunghezza superiore al max indicato, è necessario prevedere opportuni supporti (tali da non indurre sulla valvola forze di origine esterna, ad esempio da dilatazione), per sostenere il peso della tubazione stessa e le forze di reazione causate dallo scarico.
Particolare B -
Ancorare saldamente alle strutture dell'edificio.

DISCHARGE PIPE PRESCRIPTIONS

C dimension *- as short as possible, max 4 times the discharge pipe diameter.*

If discharge pipe is longer than aforesaid max, it must be supported (in such a way to avoid stresses on the valve due to thermal expansion) in order to bear the piping weight and the reaction forces caused by discharge flow.

B detail *- anchor surely to building structure.*

CARRARO è

Raccomandazioni generali per l'installazione delle valvole di sicurezza.

General recommendations for safety valve installation.

VALVOLE DI SICUREZZA
SAFETY VALVES

Cod. I, H, J, M, X

1 - Una eccessiva perdita di carico all'ingresso della valvola di sicurezza determina quella rapida successione di aperture e richiusure nota col nome di "battimento", o "martellamento".
Il battimento ha come conseguenza sia la riduzione della portata scaricata dalla valvola, sia il danneggiamento delle superfici di tenuta.
Se il battimento è di notevoli proporzioni, il danneggiamento può estendersi ad altre parti della valvola.
Le seguenti raccomandazioni saranno di aiuto per eliminare le cause che possono provocare il battimento.
a) - La sezione del tronchetto di attacco deve essere almeno equivalente alla sezione d'ingresso della valvola, ed il tronchetto stesso deve essere più corto possibile.
b) - Gli spigoli di attacco del tronchetto alla tubazione devono essere arrotondati con un raggio non inferiore ad un quarto del diametro interno del tronchetto.
c) - La perdita di carico fino all'entrata della valvola non deve risultare maggiore del 50% dello scarto in chiusura (blowdown) presunto per la valvola nelle condizioni di esercizio.
d) - Per eliminare gli effetti del fenomeno noto come " risonanza " valgono le raccomandazioni seguenti:
Le valvole di sicurezza debbono essere installate ad almeno 8÷10 diametri di distanza da ogni curva della condotta.
Tale distanza dovrà essere aumentata se la curva precede la valvola fra un tratto verticale e saliente ed uno orizzontale della tubazione, così da aumentare la densità del vapore nella zona immediatamente sotto il tronchetto di attacco.
Le valvole di sicurezza non debbono essere installate a meno di 8÷10 diametri di distanza (sia a monte che a valle) da collegamenti a "Y" di due tubazioni convergenti o divergenti.
Nei casi in cui la configurazione della tubazione rende impossibile o estremamente impratico rispettare le raccomandazioni di cui sopra, si provveda ad arrotondare lo spigolo a valle del tronchetto di attacco, lasciando vivo lo spigolo a monte.
L'arrotondamento a valle sarà fatto in modo che il raggio massimo sia pari ad un quarto del diametro del tronchetto, e venga gradualmente ridotto fino a lasciare a spigolo vivo solo una piccola porzione a monte.
Sistemando a questo modo l'ingresso nel tronchetto, la capacità di scarico della valvola non risulterà influenzata.
La valvola di sicurezza non dovrà mai essere montata su una linea in posizione contrapposta ad una derivazione di diametro equivalente situata sulla generatrice inferiore della tubazione.

2 - E' noto che eccessive vibrazioni delle tubazioni possono produrre spostamenti nella taratura delle valvole di sicurezza.
La conseguenza di vibrazioni sensibili può essere anche quella di determinare battimenti con possibile danneggiamento della valvola in aggiunta alla riduzione della capacità di scarico.
Eventuali vibrazioni delle tubazioni vanno quindi esaminate ed eliminate per prevenire difetti di funzionamento.

3 - I tubi di scarico, i drenaggi, i tubi di esalazione debbono essere installati e supportati in modo tale da non indurre forze sulla valvola.
Tali forze potrebbero determinare distorsioni e conseguenti difetti di tenuta a pressioni inferiori rispetto alla taratura.
Tener presenti le seguenti raccomandazioni:
a) - La tubazione di scarico non deve essere supportata dalla valvola.
Il massimo peso caricato sull'uscita della valvola non deve eccedere quello di una controflangia, un gomito ed un gocciolatoio.
b) - Le distanze fra il tubo di scarico ed il tubo camino dovranno essere tali da evitare contatti sia tenendo conto delle dilatazioni originate dal generatore e dal sistema di tubazioni in esercizio normale, e tenendo conto delle vibrazioni e dilatazioni in fase di scarico della valvola.
c) - Le connessioni flessibili, se usate per collegare l'uscita della valvola al tubo camino debbono essere sufficientemente lunghe e debbono essere progettate ed installate in modo tale che esse non possano mai divenire rigide in qualunque posizione della valvola.
Si ottengono risultati più sicuri quando la libertà di movimento è affidata alla flessibilità per piegamento piuttosto che per compressione o stiramento lungo l'asse.

***1 - A**n excessive pressure loss at the safety valve inlet determines the quick sequence of openings and reclosings which is known as "chattering" or "hammering".*
The chattering has the consequence both to reduce the capacity discharged by the valve, and to damage the seal surfaces.
If the chattering is of big proportion, the damage may be extended to some more parts of the valve.
The following recommendations may be of help to eliminate the causes which may originate the chattering.
***a**) - The section of the stub connecting the pipe to the valve should be at least equivalent to the valve inlet section and the stub itself should be as short as possible.*
***b**) - The edges of the stub connection to the conduit should be rounded, with a radius not less than one fourth of the stub internal diameter.*
***c**) - The pressure loss up to the valve inlet should be lower than 50% of the blowdown considered for the valve in the operating conditions.*
***d**) - To eliminate the effects of the phenomenon known as "sonic vibrations" the following recommendations are made.*
Safety valves should be installed at least 8 to 10 pipe diameters away from any bend of the conduit.
The distance should be increased when the valve is installed on the horizontal section of a header which is preceded by an upward section, so that the steam density in the area directly under the valve connection is increased.
Safety valves should not be installed closer than 8 to 10 pipe diameters either upstream or downstream from a diverging or a converging Y connection of two pipes.
In cases where a piping configuration renders the above recommendations impractical, or impossible, the dowstream corner of the header nozzle inlet should be rounded to a greater extent than the upstream corner; the radius at the downstream corner will be equal to a minimum of 1/4 of the stub diameter, and gradually reduced, leaving only a small portion of the upstream corner with a very small radius.
Arranging in this way the stub inlet, the valve relief capacity should not be influenced.
Safety valves should never be installed, in a steam line, in a position directly opposite to a branch line.

***2 - E**xcessive line vibrations are known to produce shifts in safety valve set pressure.*
Vibrations may possibly introduce chatter, causing damage to the valve, and reduce its capacity.
Consideration should be given to examining the problem and eliminating the vibrations in order to prevent working defects.

***3 - T**he discharge piping, the drains, have to be installed and supported in such a way not to induce any force on the valve.*
Such forces might determine distortions and consequently defects in the valve tightness at pressures lower than the set pressure.
Keep in mind the following recommendations.
***a**) - The discharge piping should not be supported by the valve.*
The maximum weight charged on the valve outlet should not exceed the weight of a counterflange, a bend and a drain.
***b**) - The distances between the discharge pipe and the outlet pipe shall be such as to prevent contacts, both keeping in account the expansions originated by the steam generator and by the piping systems in normal operation, and keeping in account the vibrations and the expansions in the discharge stroke of the valve.*
***c**) - The flexible connections, when used to connect the valve outlet with the outlet pipe, should be sufficiently long, and designed and installed in such a way that they may not become rigid, whichever may be the valve position.*
More sure results are obtained when the movement freedom is connected to the flexibility due to bending rather than to axial compression or stretching.

La CARRARO si riserva il diritto di modificare in qualsiasi momento e senza preavviso, le caratteristiche dei prodotti qui illustrati.
CARRARO reserves the right to modify the characteristics of here described products at any time and without notice.

RUPTURE DISK

Fike
METAL PRODUCTS
DIVISION FIKE CORPORATION
Blue Springs, Missouri 64015 U.S.A.
(816) 229-3405 • Telefax (816) 228-9277

RUPTURE DISC DEVICE CERTIFICATION NUMBER Q97006594

TÜV CERT ISO 9001

GENERAL SPECIFICATIONS

Customer: FIKE ITALIA P.O. Number: FCE-22205 P.O. Qty: 5
Qty. Shipped: 5 Nominal Size: DN40 Type: SRL Rupture Disc
Mfg. Lot Number: 9718432 Dwg. Number: N/A -
Bolt Torque: 51.0 NM Flange Rating: PN10 Capacity: N/A

Specified Manufacturing Range Type: **+/-5% Performance Tolerance**

Code or Specification Requirement: ISO6718 Certification
Customer Part Number: UM01036
Customer Tag Number: N/A

MATERIAL SPECIFICATIONS

Component and Material	Mat'l Lot No.
Ring Material 316 SST	470177
Seal Material 316 SST	9512010007

SPECIFICATIONS AT SPECIFIED TEMPERATURE

All Burst Pressures are listed in BARA @ 300 Degrees K
Specified Burst Pressure: Nominal: 6.00 Min: N/A Max: N/A

Manufacturing Range		Rupture Tolerance	
Min: N/A	Max: N/A	Min: 5.75	Max: 6.25

Stamped Burst Pressure: 6.00 Min: N/A Max: N/A

BURST TEST RESULTS

Average Burst Pressure: N/A
Burst Tests: N/A

SPECIFICATIONS AT AMBIENT TEMPERATURE*

*** Ambient temperature is defined as 50 to 90 degrees F. (10.0 to 32.2 degrees C.)**

All Burst Pressures are listed in BARA @ 295 Degrees K

Manufacturing Range		Rupture Tolerance	
Min: N/A	Max: N/A	Min: 5.75	Max: 6.25

Stamped Burst Pressure: 6.00 Min: N/A Max: N/A

BURST TEST RESULTS

Average Burst Pressure: 6.07 Test Media: AIR
Burst Tests: 6.13 6.07 6.02

SPECIAL NOTES

Full Test Certification attached. Refer to Material Lot Numbers listed above.

Rupture discs are manufactured at ambient temperature to burst within manufacturing range values derived from Fike Temperature Compensation data unless actual temperature tests are performed. We certify these components meet applicable specifications, drawings and requirements of your purchase order. Evidence of compliance is maintained on file in our records, available for review upon request.

W.J. McCarthy
Authorized Quality Representative

Aug-29-97 @ 1:37 PM
Date

AL 6186A-E 3/88

NOTICE OF SHIPMENT/ PACKING LIST

ALLEGHENY LUDLUM STEEL

DIVISION OF ALLEGHENY LUDLUM CORPORATION
DEDICATED TO QUALITY SPECIALTY STEEL

CERTIFICATE OF TEST

2

ST. ORDER NO. & DATE	CUST CODE	ACCEPTING MILL	SHIPPER NO.	PRODUCT CODE	MILL ORDER NUMBER	DATE SHIPPED
-060977 10/29/96	H603816	NEW CASTLE, IN.	072078	13020102060000	30-106-748	12/23/96

FORMS DISTRIBUTION	REPEAT ORDER	DO RATE	PRIORITY	GOV'T. CONTRACT	MAT'L.	SHIPPING LOCATION	INVOICE
SHIP TO 2 SPEC	42565-4	22			1237	NEW CASTLE IN	072078

SOLD TO	PRIME	SEC.	SHIP TO
VINCENT METAL GOODS SVC #41	DSO	DSO	VINCENT METAL GOODS SVC #58
RIO ALGOM, INC. - 03108	501	584	RIO ALGOM INC.
P.O. BOX 346			43 CENTURY DRIVE
ST. LOUIS MO 63166			AMBRIDGE PA 15003

LT# 470177
3-5-97

GRADE AND SPECIFICATIONS CARRIER - RAIDER TRUCK LINES

LEGHENY STAINLESS STEEL TYPE 316-L SHEET C R COILS ANNEALED 2B FIN 3 EDGE -- (ASTM-A-240-95B) SME-SA-240-A95) (ASTM-A-167-94) (4-2S SHEET) (MG SPEC BK SEC I ATT #3 #6 #9) (QQ-S-766D) -- (316/316L) -053:

CH PCS	DIMENSIONS W/G/L	HEAT #	COIL #	TEST #	GROSS	TARE	NET	THEO	TAG #/ CD	SKID #
1C	1 48./.024/COIL	874572	12066N602A	7633010	10405	88	10317		907203	B4
	1 48./.024/COIL	874572	12066N602B	7633010	9775	88	9687		907204	B3
C CUST IDENTITY 357913										
	2 SKIDS				20180	176	20004			

DIST: CPY ACK TO: VINCENT METAL GOODS, 455 85TH AVE N.W., MINNEAPOLIS, MN 55433, ATTN: SINA KOVAL/ S.O. STATUS - BRKN

YPE	HEAT/TEST	--C---	--MN--	--P---	--S---	--SI--	--CR--	--NI--	--MO--	--N---
AT	874572	.021	1.74	.028	.0005	.45	16.25	10.20	2.10	.03

EM	TEST NO	YIELD PSI *	TENSILE PSI	% ELONG IN 2"	% R/A	HARDNESS	BEND	CORROSION A 262 PR E	GRAIN SIZE	HARDENABILITY
1C	7633010	T 41900.	88500.	62.	NR	64.HR30T 62.HR30T	NR	PASS	NR	NR

* Y.S. BY 0.2% OFFSET METHOD

NR = DATA NOT REQUIRED

LEGHENY LUDLUM DOES NOT USE MERCURY IN THE TESTING OR PRODUCTION OF ITS PRODUCTS. TO THE BEST OF LEGHENY LUDLUMS KNOWLEDGE, UNDERSTANDING, AND BELIEF, THIS MATERIAL WAS NOT CONTAMINATED BY MERCURY ILE IT WAS BEING PRODUCED IN OUR FACILITIES.

AGE 01 OF 01 SHIPPING CONTROL COPY 12/23/96 14:10:01

GNEE – Please note – This consignment was turned over to the first class condition, being correctly loaded, at which time sponsibility for loss or damage in shipment ceased. For your tion please examine shipment as it arrives. If any shortage or [illegible] discovered, have a full description made by transportation or waybill before signing.

WARNING
Material Safety Data Sheets for this product have been supplied to your Purchasing Department. For an additional copy phone 412-845-8527. CAUTION: Processing that makes fumes, dust, or solutions may cause lung disease. See [illegible] Safety Data Sheets for further information.

Les fiches d'information – sécurité de ce produit ont été fournies à votre département chargé des achats. Pour obtenir des exemplaires supplémentaires veuillez téléphoner au numéro suivant: 412-845-8527. Attention: les traitements entraînant la production de vapeurs, poussières, ou solutions peuvent être cause de maladies pulmonaires. Pour plus de renseignements se référer aux fiches d'information-sécurité.

The above is a true copy of data on file. The material and test results conform to the sales contract and specification(s) as set forth in Allegheny Ludlum's Order Acknowledgement.

K. L. Aber
K. L. Aber - Manager, Technical Information Systems and Specifications

TELEDYNE RODNEY METALS

4349 GREEN ASH DRIVE
EARTH CITY, MO. 63045
TEL.314-298-8290 FAX.314-298-7404

PURCHASE ORDER NO	OUR ORDER NO	PAGE
7097	S6832K	1 of 1

FINE METAL PRODUCTS CORP
704 SOUTH 10TH STREET
BLUE SPRINGS MO
64015-0000

FINE METAL PRODUCTS CORP
704 S 10TH ST
BLUE SPRINGS MO
64015 0000

9512010007
12-12-95
p.1 of 2

TEST CERTIFICATE NO. 40066

DESCRIPTION: 316 ANN .00500 +.00025 -.00025 4F

E NE S.	PROD. NO. CODE PRODUIT PROD.-NR.	WIDTH LARGEUR BREITE	TOLERANCE TOLERANCE TOLERANZ	CUSTOMER PART NUMBER NUMERO DE PIECE CLIENT KUNDEN-TEIL-NR.	ORDERED QUANTITY QUANTITE COMMANDEE BESTELLMENGE	SHIPPED QUANTITY QUANTITE LIVREE VERSANDMENGE	NO. OF PIECES NOMBRE DE PIECES STÜCKZAHL DER COILS
2	000400	36.000	+ N/A - N/A		300.0 LB	302.0	2

COIL NUMBER ERO DE COURONNE COIL-NR.	HEAT NUMBER NUMERO DE COULEE CHARGEN-NR.	SUPPLIER FOURNISSEUR LIEFERANT	METHOD OF MELT TYPE DE COULEE SCHMELZART	LOT NUMBER NUMERO DE LOT LOS-NR.	CUSTOMER SPECIFICATIONS SPECIFICATION CLIENT KUNDENSPEZIFIKATION
11149	718134	JL	AOD		AMS 5524H ASTM A 240/A240M-94A

Inspection and dimensional records above verified by:

ALYSIS	C	MN	P	S	SI	CR	NI	N2	CU	MO
	.014	1.81	.028	.014	.41	16.46	10.2	.048	.33	2.07

**********M E C H A N I C A L P R O P E R T I E S **********

NDITION N	D	HARDNESS	U.T.S.	.2% YS	%E -in 2"	BEND	GRAIN SIZE	EMB	I.G.A.	KA MICRO INCH
	L	RB 84.0	97,000 PSI	42,900 PSI	51.0	OK		OK		
	T		93,000 PSI	43,000 PSI	55.0					

CHEMICAL ANALYSIS IS TAKEN FROM THE RAW MATERIAL SUPPLIER'S TEST CERTIFICATE.

Information above shall not be reproduced, except in full, without written approval of T.R.M.

Gopi Krishnamurti
Manager of Metallurgy
AUTHORIZED SIGNATURE

11/28/95
DATE

above are true and correct results of tests
amples of the material. Said results meet

Gopi Krishnamurti
MANAGER OF METALLURGY

Les resultats d'essai sur le materiel decrit ci-dessus sont veridi[illegible] et sinceres. Ils sont conformes aux [illegible]ications applicables et sont enregistres.

ISO 9002 TUV CERT
Certificate Registration No.272

Die obenstehenden Daten sind nach bestem Wissen und Gewissen korrekt ermi[illegible]t und basieren auf Testergebnissen von [illegible] Werkstoffproben. Die Ergebnisse [illegible]prechen den vorliegenden Spezifikationen und sind

ORIGINAL ISSUE DATE 08/21/95

J&L Specialty Steel, Inc.

TEST REPORT

DETROIT, MICHIGAN 48[illegible]

9512010007
12-12-95
p.2 of 2 Guarded 955372

CODE	MILL ORDER NO.	CUSTOMER PART NO.	DESCRIPTION	SHIPPER DATE	SHIPPER NO.
30	69173		316 2 D	04/27/95	D55552 PAGE 1 OF 1

END USE				
REROLLING	.0721 NOM IN / 1.83 MM	25.500 IN / 647.70 MM	COIL IN / COIL MM	

MATERIALS PRODUCED TO AND CONFORM WITH: SEE SPECS BELOW

P.O. NO. 28265

SOLD TO:
TELEDYNE RODNEY METALS 3/0
P.O. BOX 6915
NEW BEDFORD, MA 02742-0915

SHIP TO:
TELEDYNE RODNEY METALS
1357 EAST RODNEY FRENCH BLVD.
NEW BEDFORD, MA 02742-0915

LIFT NO.	HEAT NO.	COIL NO.	PIECES	NET WEIGHT LBS	NET WEIGHT KG
D45857	718059	7644714	1	14020	6359
		TOTALS	1	14020	6359

HEAT NO.	C	Mn	P	S	Si	Cr	Ni	Mo	Cu	Co	N_2	Al	Ti
L 718059	.016	1.82	.028	.013	0.47	16.53	10.20	2.10	0.22	.12	.052		

COIL / LIFT NO.	LOCATION	HARDNESS	YIELD PSI	YIELD MPA	TENSILE PSI	TENSILE MPA	% EL 2"	% RA	OLSEN	BEND TEST ANGLE	BEND TEST FACTOR
7644714	HEAD	RB 79	39,600	273	85,500	590	50			180	1XT
	TAIL	RB 79									

BENDS OK

J&L SPECIALTY STEEL, INC. DOES NOT USE MERCURY IN THE PRODUCTION NOR IN THE TESTING OF ITS PRODUCTS.
ACIDIFIED CU SO4 INTERGRANULAR CORROSION TEST - OK.

COIL / LIFT NO.	GRAIN SIZE	CORROSION
7644714		OK

AMS 5507E ASTM A-167-92B ASTM A-240-94
ASTM A-262-91 PRAC E ASME SA 240-92 QQS-766D

IT IS CERTIFIED THAT ALL ANALYSIS FIGURES ARE CORRECT AS CONTAINED IN THE RECORDS OF THE COMPANY.

M. J. McGuire

04/27/95

M-0002 (Rev. 2/94)

KRUPP HOESCH STAAL N.V.
Park Ragheno
Motstraat 54 - 2800 Mechelen

Fike Europe
Cert. Nr. 878946
FL 970710 it 1

FIKE
Tav.: Dhr. Jacobs

V/réf. N/réf. Date:
U/ref. O/ref. MAG 3450 Datum: 06/08/97

ATTESTATION DE QUALITE
KWALITEITSATTEST

EN 10 204 3.1.B

Produit : Nuance: Mode d'élaboration :
dukt: Round Kwaliteit: WN 4404 Wijze van gieten : E

Nr.	Quantité Hoeveelheid	Poids Gewicht	Dimension mm Afmeting	Coulée n° Giet nr.	Essai n° Proef nr.	Lot n° Lot nr.	Controle dim. Afm. Kontrole
1	2 St.	1400 Kg	Dia 150 mm	227011		970051710	Satisfaisant Bevredigend

Coulée n° Giet nr.	%C	%Si	%Mn	%P	%S	%Cr	%Mo	%Ni	%N
227011	0,013	0,6	1,5	0,03	0,026	16,9	2,1	11,1	

Essai n° Proef nr.	Dim. Epr. mm Proef Afm. mm		RP 0,2	RP 1,0	Rm	AL=5d. AL=80	%A5	%Z	
	10	L	249	295	554		56	71,4	

Nous certifions que ce matériel a été réceptionné selon
Wij bevestigen dat dit materiaal werd afgenomen volgens DIN 17440

LE CONTROLE ANTI-MELANGE A ETE REALISE
DE ANTI-MENGSEL-TEST WERD UITGEVOERD

Le Test I.K. a été réalisé selon DIN 50914:
De I.K. Test werd uitgevoerd volgens DIN 50914:

DIVERS: ATTEST 825/97

Tel. (015) 45 00 30
Fax (015) 42 10 88
H.R. Mechelen 76 174
B.T.W. BE 401 890 497

KRUPP HOESCH STAAL
S.A. N.V.

Prk. 000-0023279-06
Generale Bankmaatschappij 230-0992275-82
Bank Brussel Lambert 330-0575250-94
Kredietbank 437-7500111-12

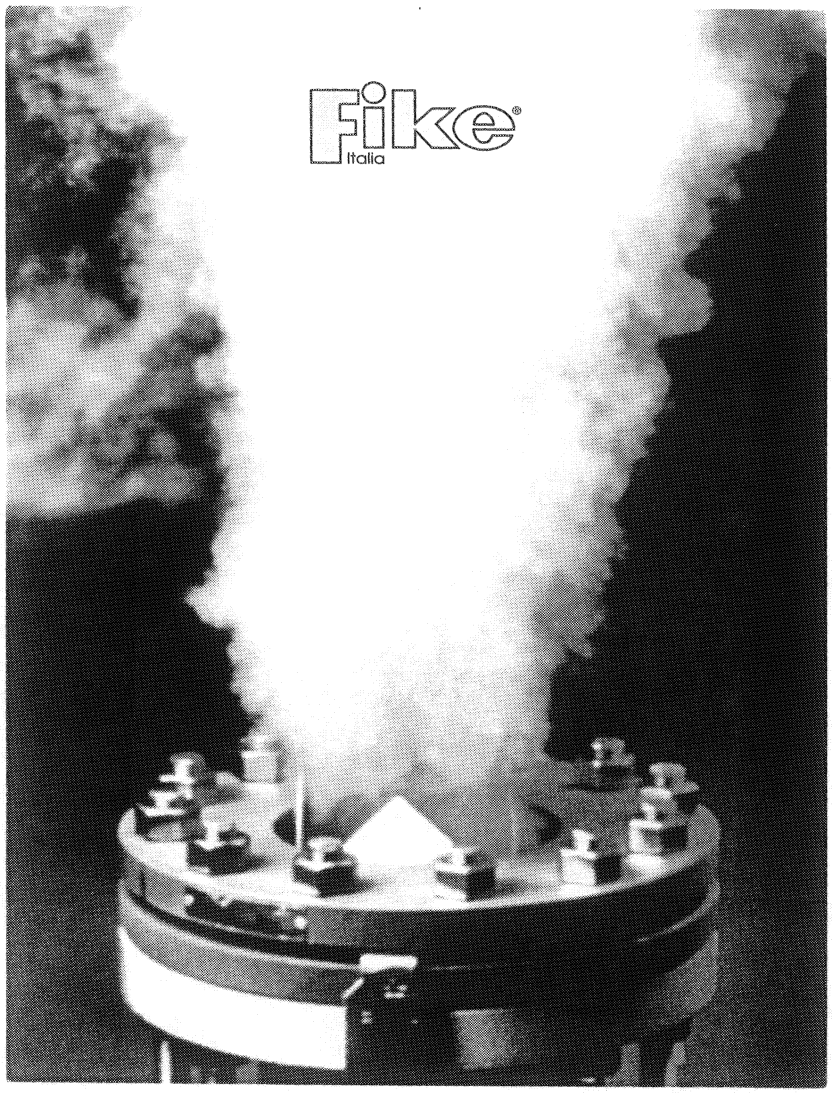
Fike
Italia

Fike Europe N.V.

ISTRUZIONI DI INSTALLAZIONE E MANUTENZIONE

Disco di rottura rovesciato e preinciso

Modello: SRL

Informazioni Generali
Il disco di rottura è una unità di scarico della pressione studiata per garantire l'apertura istantanea a pressione predeterminata di un sistema pressurizzato. La sua funzione è quella di proteggere il sistema da eccessi di pressione causati da reazioni chimiche o altre condizioni interne di sovrappressione.
Il disco di rottura rovesciato e preinciso richiede una particolare attenzione sia in fase di installazione che durante la manutenzione.

Avvertenza: Non collocate il disco di rottura in zone esposte al passaggio o stazionamento di persone perchè le stesse potrebbero restare ferite nel caso di fughe di pressione, rumore, prodotti chimici e/o frammentazione di parti.

Questa precauzione deve essere osservata nel caso di scarico "a bocca libera" anche se protetto da un ostacolo posizionato per assorbire l'eventuale forza d'urto del fluido in pressione. Nel caso di possibili scarichi tossici o gas/liquidi infiammabili gli stessi devono essere convogliati in luogo sicuro. Assicurare la tubazione con appropriati appoggi per assorbire l'urto nel caso di rottura del disco.
Per installare o sostituire un disco controllare quanto segue:

1. Disco di Rottura
Ispezionare attentamente il disco, controllare il numero di riferimento e tutti i dati indicati sulla targhetta (fig. 1) corrispondenti a posizionamento e specifiche. Rimuovere qualsiasi corpo estraneo presente sulla superficie del disco usando, se necessario e con la massima attenzione, un appropriato solvente.

Avvertenza: Maneggiare il disco di rottura con estrema cautela. Corpi estranei sulla zona di appoggio possono essere causa di perdite. Impronte graffi o qualsiasi alterazione della superficie del disco potrebbero dare luogo ad alterazioni della pressione di rottura fino ad un valore massimo pari a 1,5 volte la pressione nominale.

2. Sedi di alloggiamento
Rimuovere le sedi dalla linea e separare le due sedi. Rimuovere il disco da sostituire. Ispezionare le zone di contatto tra le due sedi e pulirle usando solvente, spazzola o tela smeriglio fine se necessario.
Se previsto, ispezionare l'anello toroidale O-ring e sostituirlo quando necessario.

Attenzione: Danni alle sedi di tenuta possono causare perdite o impossibilita per il disco di operare entro le tolleranze specificate.

Avvertenza: Sedi di alloggiamento danneggiate o corrose possono essere ricondizionate solo da "FIKE" la quale è in grado di emettere dettagliato preventivo per questo servizio. Lavorazioni da parte di personale non qualificato potrebbero causare perdite o scoppi del disco al di fuori delle tolleranze dichiarate.

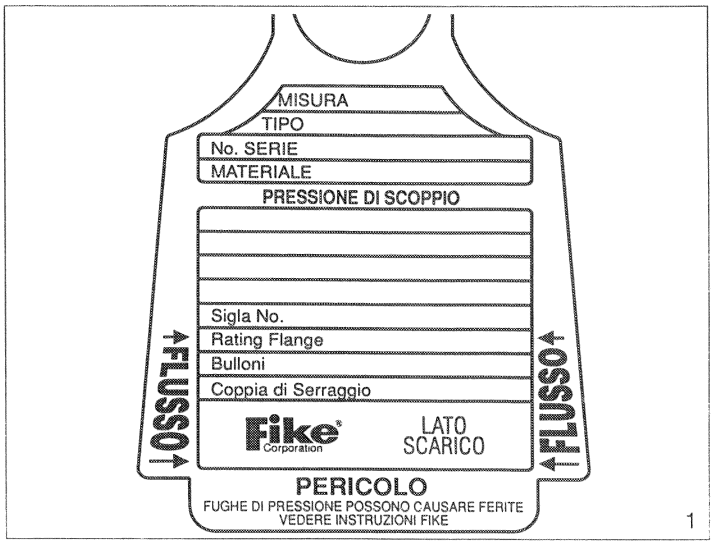

1

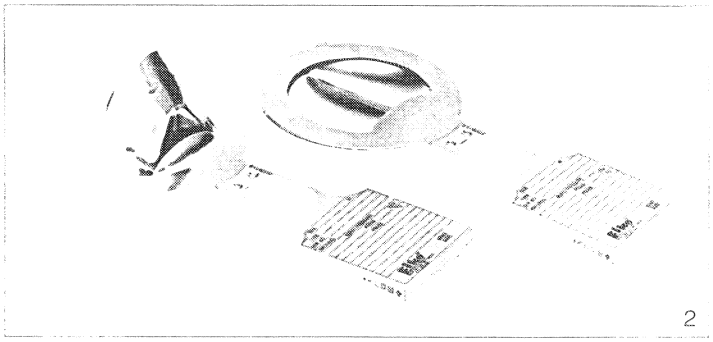
2

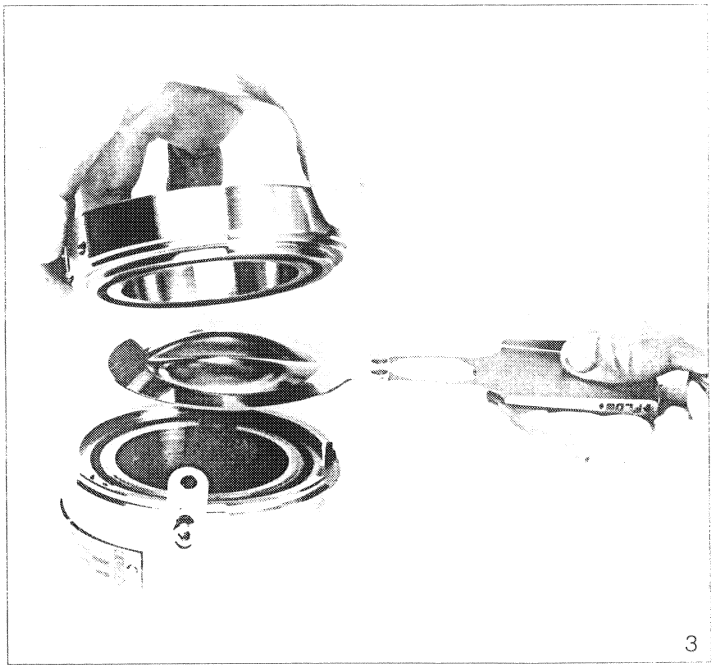
3

3. Installazione

Appoggiare la controflangia portadisco su una superficie di lavoro tenendo la zona di appoggio al disco orientata verso l'alto (fig. 3). Inserire l'opzione dell'O-ring nella contraflangia portadisco (quando richiesto). Posizionare il disco di rottura avendo cura di tenerne la calotta bombata verso l'alto. La linguetta di riferimente "DiscLoc"™ deve inserirsi propriamente nella sua nicchia di alloggiamento. Inserire l'opzione dell'O-ring nella base portadisco (quando richiesto). Allineare attentamente e piazzare la base portadisco sul disco avendo cura di tenere la zona di appoggio al disco rivolta verso il basso. Se provvisto, installare le viti di preassemblaggio o le clips laterali (fig. 4-5).

Attenzione: La tenuta tra disco e sede è una tenuta "metallo su metallo". Non usare nessun sigillante, guarnizione o grasso.

Piazzare l'unita portadisco tra le flange di linea. Verificare che le frecce riportato sul disco e sul portadisco siano orientate nella stessa direzione del flusso di scarico. Installare dadi e tiranti che devono essere lubrificati con olio leggero (SAE20W). Serrare i dadi con una coppia di serraggic corrispondente a quella marcata sulla targhetta di identificazione del disco di rottura (fig. 1). Serrare i dadi con successione incrociata con almeno 4 rotazioni. Si raccomanda dopo l'avviamento del sistema ed il raggiungimento delle condizioni normali di esercizio di riverificare il valore della coppia di serraggio dei bulloni che potrebbe essere variata per distensione del materiale. Attenzione durante il montaggio deve essere prestata anche al rating delle flange ed alle loro superfici che devono risultare tra loro parallele.

NOTA: Guarnizioni prodotte in materiali deformabili (p.e. Teflon) non sono raccomandate con l'impiego di contenitori SRL Gi. Consultateci per informazioni.

Attenzione: Il valore massimo della coppia di serraggio dei bulloni non deve superare quello prescritto in quanto ciò potrebbe determinare la deformazione permanente delle sedi di alloggiamento del disco di rottura. Questo fatto è influente sia sulla tenuta che sulla pressione di scoppio del disco.

Nel chiudere il disco con le sue sedi di alloggiamento tra le flange è importante che tutto il carico agente sul disco sia trasferito sulle flange le cui superfici devono restare il più parallele possibile tra loro anche durante il montaggio.

Avvertenza: Un eccessivo serraggio può danneggiarele superfici delle sedi di alloggiamento e può tranciare i dischi di rottura più sottili.

4. Manutenzione preventiva

Il disco di rottura dovrebbe essere ispezionato almeno ogni 6 mesi. Un controllo dovrebbe tendere a verificare se esistono segni visibili di perdite, corrosione o danneggiamento del disco. Generalmente il disco viene sostituito solo a rottura avvenuta. Comunque in molti casi le condizioni operative di impiego del disco determinano la frequenza con cui il disco deve essere sostituito. La migliore durata del disco può essere determinata solo sulla base delle singole esperienze legate alla applicazione.

5. Sostituzione del disco di rottura

Avvertenza: La linea di processo deve essere scaricata da tutte le pressioni prima di qualsiasi tentativo di rimozione del disco.

Per sostituire un disco scoppiato seguire le stesse raccomandazioni già citate in precedenza.

Quando riordinate il disco di rottura specificate sempre il n° di serie (vedi targhetta fig. 1).

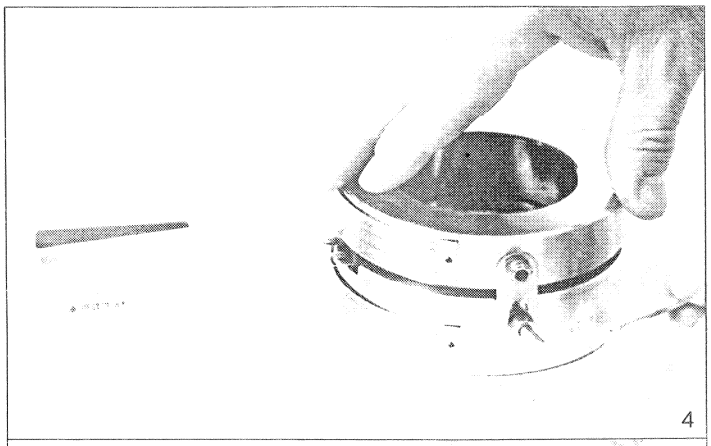

4

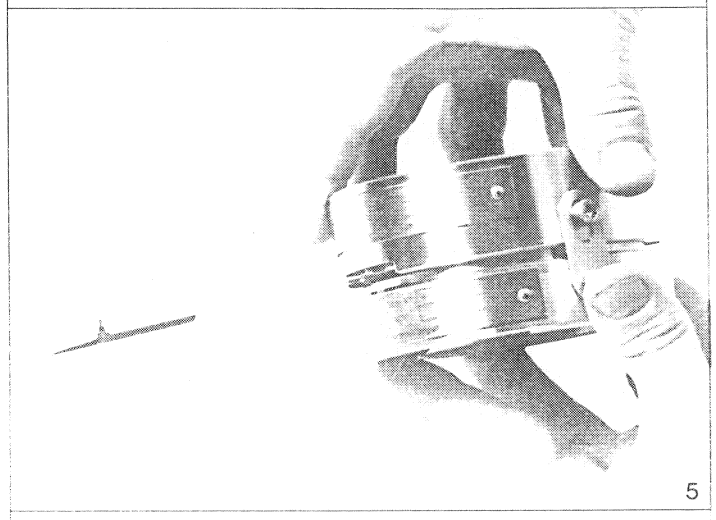

5

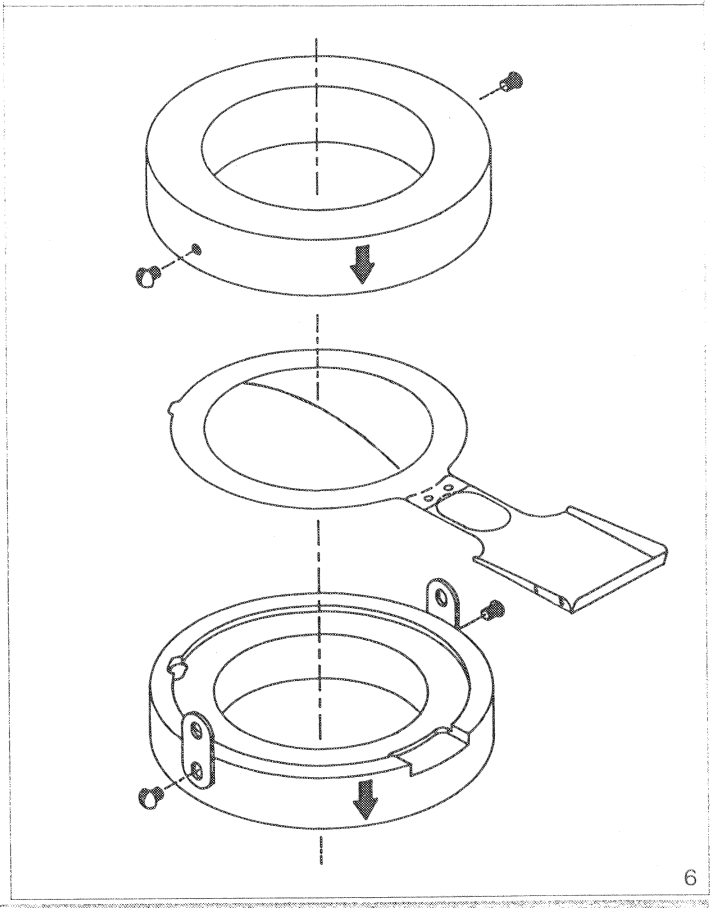

6

8 8126.70 0

Fike® Europe N.V. - Toekomstlaan 52 - B-2200 Herentals - Belgio - Tel. 014/21.00.31 - Telex 72.497 - Telefax 014/21.07.43

AXIAL TIERODS BELLOWS

RIAL VACUUM S.p.A.

Via P. Campanini, 3/a - 43100 Parma - Italia Tel. (0521) 272120 Fax 0521/270564

CERTIFICATO DI TENUTA A ELIO
CERTIFICAT D'ETANCHEITE' A L'HELIUM
HELIUM LEAK TEST CERTIFICATE
BESCHEINIGUNG ÜBER DICHTIGKEITSPRÜFUNG

1552

CLIENTE / CLIENT / CUSTOMER / KUNDE ANSALDO ENERGIA SPA GENOVA	ORD. CLIENTE / CDE CLIENT / CUST. ORDER / KUNDENBEST. COMM. FO 312
DESCRIZIONE / DESIGNATION / DESCRIPTION / BEZEICHNUNG - COMPLESSO A INS. 620RMO 7486 FIG. 1	RIF. RIAL / REF. RIAL / RIAL CODE / RIAL REFERENZ
N° DI SERIE / N° D'ORDRE / SERIAL NR / SERIE NUMMER	RIF. CLIENTE / REF. CLIENT / CUSTOMER REF. / KUNDENREF.

☐ TRATTAMENTO RIAL U.H.V. PROCEDURE RIAL U.H.V. RIAL U.H.V. PROCEDURE RIAL U.H.V. VERFAHREN	N. 7	ALTRI TRATTAMENTI ..... AUTRE PROCEDURE ..... OTHER PROCEDURE ..... ANDERE VERFAHREN .....

— CERCAFUGHE / DETECTEUR DE FUITE / LEAK DETECTOR / DEEKDETEKTOR: ALCATEL TYPE ASM 51 NR. .....

— CLASSE DI PROVA / CLASSE D'ESSAI / TEST CLASS / PRÜFKLASSE

☐ A 3×10^{-8} atm. cm^3/sec.

☐ B 3×10^{-8} atm. cm^3/sec.
- CON DECAPPAGGIO E TRATTAMENTO BIANCO
- AVEC DECAPAGE ET TRAITEMENT BLANC
- WITH PICKLING AND NUCLEAR CLEANLINESS
- MIT BEIZEN BZW UHV-REINIGUNG

☒ C 1×10^{-9} atm. cm^3/sec.
- CON RISCALDAMENTO A 130° C
- AVEC ETOUVAGE A 130° C
- WITH BACKING AT 130° C
- AUFHEIZUNG BIS 130° C

☐ REGISTRAZIONE DELLA PROVA
ENREGISTREMENT DE L'ESSAI
TEST RECORDING
AUTOM. PRÜFEINTRAGUNG

COMMENTI / COMMENTAIRES / COMMENTS / BEMERKUNG

RISULTATI DELLA PROVA / RESULTATS DE L'ESSAI / TEST RESULTS / VERSUCHSERGEBNISSE:

N. DI PEZZI PROVATI / N. DE PIECES TESTEES / N. OF PARTS TESTED / GEPRÜFTE TEILANZAHL: 7

N. DI PEZZI ACCETTATI / N. DE PIECES ACCEPTES / N. OF RECEIPT PARTS / ANGENOMME TEILANZAHL: 7

DATA / DATE / DATE / DATUM 24/07/97

IL CONTROLLORE / LE CONTROLLEUR / THE CONTROLLER / DER PRÜFER

CURRENT LEADS (DISCENDENTI)

American Magnetics, Inc.

P.O. Box 2509, 112 Flint Road, Oak Ridge, TN 37831-2509
Phone: (423) 482-1056 Fax: (423) 482-5472
Internet: http://www.usit.net/ami E-mail: amagi@usit.net

AMI HELIUM VAPOR COOLED CURRENT LEADS

Installation, Operation and Maintenance Instructions

I. INTRODUCTION

The American Magnetics, Inc. (AMI) helium vapor cooled current leads are designed to introduce high currents into liquid helium environments with a minimum of liquid helium loss. This is accomplished by using the heat capacity of the cold helium boil-off gas to cool the current leads.

II. SPECIFICATIONS

A. Table 1 lists the specifications and shows dimensional references for AMI standard vapor cooled current leads. Dimensional references in Table 1 are shown on Figure 1. Custom designed or special order current leads may have dimensions and specifications that vary from those listed. However, the remainder of the information in these Installation, Operation and Maintenance Instructions is applicable.

B. A voltage drop of 0.2 volts per lead at the rated current is typical.

C. A pressure drop of approximately 2mm of mercury (0.03 psi) is developed through the leads at the rated current.

D. Operating temperature range is 300K to 4.2K.

III. INSTALLATION

A. Carefully remove the current leads from the shipping carton and ensure all packaging material is removed.

B. Ensure that the vapor passages do not have any foreign material lodged in them. Check the passage-ways by blowing dry compressed air through the passage-ways.

> *<u>NOTE:</u> Compressed air with high moisture content may cause water vapor to collect in the passage-ways which may subsequently freeze and cause blockage.*

Model Number		L-50	L-75	L-100	L-150	L-200	L-250	L-500	L-1000	L-2000	L-3000	L-5000
Amperes		50	75	100	150	200	250	500	1000	2000	3000	5000
~Helium consumption, liters/hr., (pair of leads)		0.18	0.25	0.37	0.48	0.64	0.8	1.6	3.2	6.4	9.6	16
Type (see figures above)		A	A	A	A	A	A	A	B	B	B	B
DIMENSIONS IN INCHES	A	1/4	1/4	1/4	1/4	3/8	3/8	1/2	1/2	1/2	1/2	3/4
	B	1-1/2	1-1/2	1-1/2	1-1/2	2	2	3	3	3	3-3/4	4-1/2
	C	1	1	1	1	1-1/4	1-1/4	1-1/2	2	2-1/2	3	3
	D								1	1	1-1/2	1-1/2
	E	9/32	9/32	9/32	9/32	9/32	9/32	9/16	9/32	7/16	7/16	7/16
	F	3/8	3/8	3/8	3/8	1/2	3/4	3/4	3/4	3/4	1	1
	G	3/8	3/8	3/8	3/8	1/2	1/2	1/2	7/8	1-1/8	1-1/4	1-1/2
	H	1/4	1/4	1/4	1/4	3/8	1/2	1/2	1/2	3/4	1	1
	I								2-1/4	2-1/2	2-5/8	3
	J								1-3/4	2	2-1/8	2-1/4
	K	1/4 NPT	1/4 NPT	1/4 NPT	1/4 NPT	3/8 NPT	3/8 NPT	1/2 NPT	1	1-1/4	1-3/8	1-5/8
	L	7/8	7/8	7/8	7/8	1	1	1-3/16	5/8	5/8	5/8	5/8
	M	9/16	9/16	9/16	9/16	9/16	9/16	3/4	3/8	3/8	3/8	3/8
	N								9/32	9/32	9/32	9/32
	O	1/4	1/4	1/4	1/4	3/8	3/8	1/2	3/4	1	1-1/8	1-3/8
	R					0.201	0.201	0.201	9/32	13/32	17/32	17/32
	S	1	1	1	1	1	1	1	1-1/2	1-1/2	1-1/2	1-1/2
	T	1/16	1/16	1/16	1/16	1/8	1/8	1/8	1/4	1/4	1/4	1/4
	U					1/4	1/4	1/4	1/2	1/2	1/2	1/2
	V	16-5/8	16-5/8	16-5/8	16-5/8	16-5/8	16-5/8	17-1/2	19-1/2	19-1/2	19-1/2	19-1/2
	W	Adjust.	Adjust.	Adjust.	Adjust.	Adjust.	Adjust.	Adjust.	1-1/2	2	2	2
	X	1/4	1/4	1/4	1/4	3/8	3/8	1/2	3/4	1	1-1/8	1-3/8

TABLE 1
HELIUM VAPOR COOLED CURRENT LEAD SPECIFICATIONS

*Helium consumption is for a pair of leads when energized at operating current. Helium consumption is approximately equal to 1.6 x 10-3 liter per hour per lead. Helium consumption at zero current is approximately 40% of operating consumption.

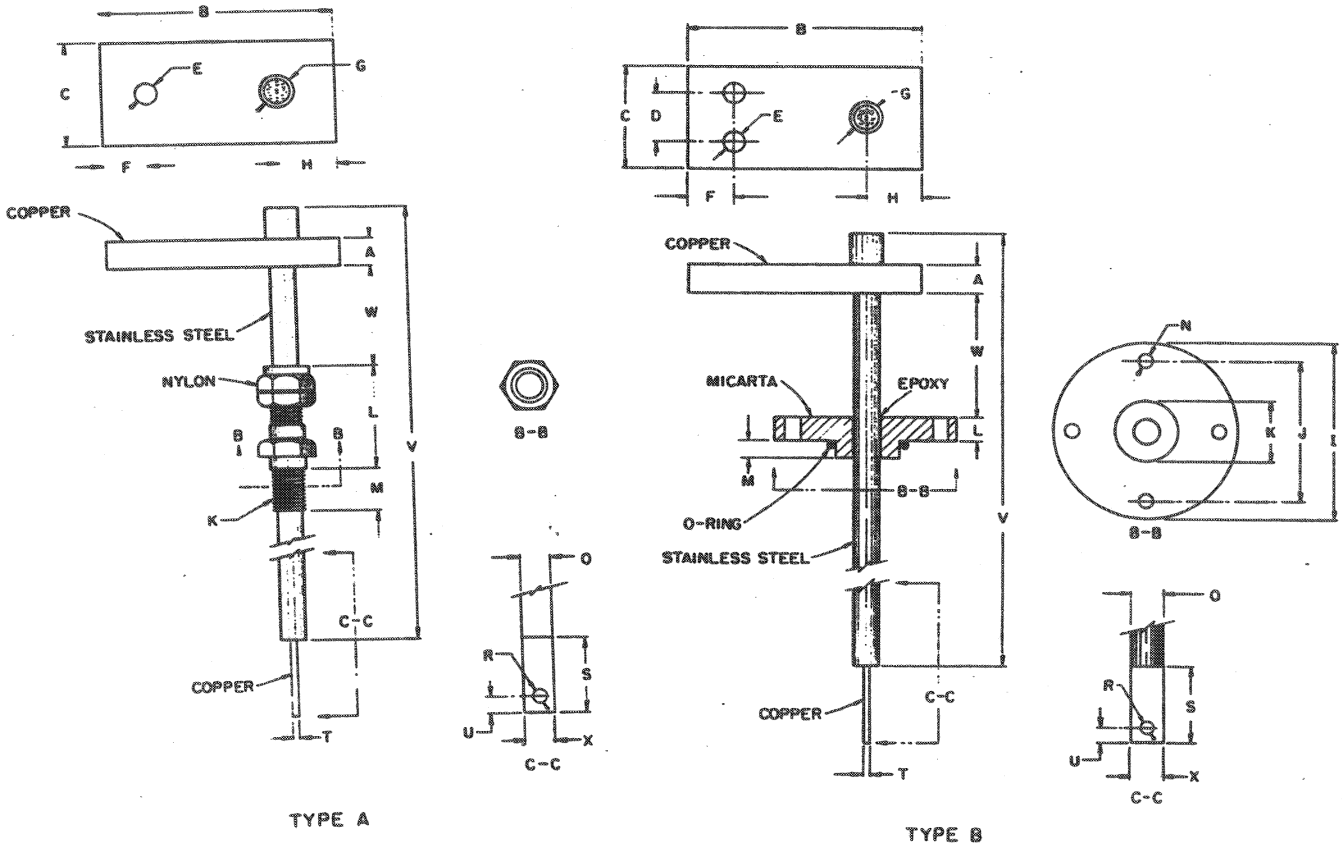

FIGURE 1
DIMENSION REFERENCES OF STANDARD HELIUM VAPOR COOLED CURRENT LEADS

C. Position the current leads into the helium dewar and secure them in position either with nylon bushings or by bolting through the micarta flange.

> *<u>CAUTION:</u> Ensure that the bottom of the vapor tube is positioned above the maximum liquid helium level. A liquid helium level above the bottom of the vapor tube will result in excessive helium loss until the level stabilizes below the end of the vapor tube.*

D. Electrical connections to the bottom current lug should be made by bolting and soldering. Solder electrical connections with ordinary eutectic lead-tin or other low melting point solder.

> *<u>CAUTION:</u> A heat sink should be provided between the electrical connection and the vapor tube to keep the temperature below 400oF. The vapor tube is constructed with a lead-silver solder that melts at 430oF. Temperatures above 430o could result in damage to the vapor tube filaments.*
>
> *<u>NOTE:</u> It is desirable to make as good an electrical connection as possible between the current lead connection flange and the load. A poor electrical connection may cause excessive helium loss.*
>
> *<u>NOTE:</u> AMI can provide a 24 inch bus bar extension that will operate in either the superconducting or resistive mode. However, it should be noted that the use of a bus bar extension may cause the helium consumption to increase.*

E. Electrical connections should be made by bolting or clamping cables, with proper terminations, to the top current lug.

> *<u>CAUTION:</u> Be sure all power supplies are de-energized before making or breaking electrical connection.*

F. During cooldown, helium gas should be vented through the vapor cooled current leads. A short length of rubber tubing pointed downwards will create a helium gas trap and prevent the re-introduction of air into the system.

IV. OPERATION

The helium vapor cooled current leads are a passive system component. They are ready to carry the current to the load when properly installed. Upon initial operation and periodically thereafter the helium gas flow through the current leads should be checked and the flow balanced (i.e. equalized). Flow is adjusted by restricting, by any suitable means, the higher gas flow. All normal gas flow from the dewar should be vented through the current leads. An overpressure valve should be provided on the dewar to vent large amounts of helium gas that may be generated in an abnormal event (e.g. superconducting magnet quench).

> *CAUTION: When vapor cooled current leads are used with inductive loads such as superconducting magnets, special care should be taken to avoid thermal damage to the current leads. Gas blockage can result in overheating, deterioration or even complete burn-out of the current leads. The resulting inductive voltages in the load are dangerous and special care must be taken to ensure the magnet is completely discharged to avoid equipment damage and electrical shock.*

After gas flow has been initially balanced a frequent visual check for frost on the current lead is sufficient to assure safe operation. Alternatively, the voltage across each lead (from the top of the lead to the appropriate magnet terminal) may be monitored to avoid operating with an overheated condition.

> *CAUTION: If your experiment requires current reversing it is recommended that the AMI Model 610 current reversing switch be purchased. Manual disconnecting and switching of current leads is NOT recommended because of the potentially fatal voltages involved.*

V. MAINTENANCE

Periodically check and adjust the helium gas vapor flow through the leads to ensure they are balanced.

VI. TROUBLESHOOTING

If the vapor cooled current leads are properly installed and operated within the specification limits they will provide years of trouble free service. The leads are sealed, passive units and repair, other than by factory authorized personnel, is not recommended.

VII.WARRANTY

All products manufactured by AMI are warranted to be free of defects in materials and workmanship and to perform as specified for a period of one year from date of shipment. In the event of a failure occurring during normal use, AMI, at its option, will repair or replace all products or components that fail under warranty, and such repair or replacement shall constitute a fulfillment of all AMI liabilities with respect to its products. All warranty repairs are F.O.B. Oak Ridge, Tennessee.

VIII.RETURN AUTHORIZATION

Items to be returned to AMI for repair (warranty or otherwise) require a return authorization number to ensure your order will receive the proper attention. Please call an AMI representative at (423) 482-1056 for a return authorization before shipping any item back to us.

SCHAEFER

KLAUS SCHAEFER AG

KRYOTECHNIK · VAKUUMTECHNIK · MESSTECHNIK · UMWELTSCHUTZ

Telephon (031) 747 64 64
Telefax (031) 747 64 70
Bankkonto Société de Banque Suisse, CH-1630 Bulle, 67-815.001.0
Postcheckkonto Zürich 80-34049-0
MWST-Nr 237.851

KLAUS SCHAEFER AG · POSTFACH · CH-3178 BÖSINGEN

ANSALDO ENERGIA S.P.A.
Uffici di Via N. Lorenzi 8
I - 16121 GENOVA

Ihr Zeichen: / Your reference: Mr. Marco Galleno

Ihre Nachricht vom: / Your letter of: Fax of November 21, 1996

Unser Zeichen: / Your reference: VK/KS/FN

Industriestrasse 12, CH-3178 Bösingen
December 19, 1996

Offer No. 8671/1/96

3, [illegible] BOTTOM FLANGE 114.3 mm O.D.

QUAN.	DESCRIPTION

1 pair **Custom L-5000 Vapor Cooled Current Leads**

AMI vapor cooled current leads transfer current from a 300K room temperature environment to 4.2K helium. The heat capacity of helium vapor is used in these counterflow leads to minimize the liquid helium consumption. The vapor cooled leads will be tested and meet the specifications listed below. AMI recommends a slightly different top flange configuration as shown in drawing number 1920626-0359-2. AMI also requests that the bottom SS flange be larger in diameter to avoid damage from excessive heating of the lead assuming welding is required upon installation.

ALLARME = 100 mVolt

The current leads will meet the following specifications:

1. Continuous current rating ..... 5,000 amperes
2. No-flow burnout time ..... 3.15 minutes minimum
3. Active length ..... 965.2 mm
4. Overall length of lead body ..... 1105 mm
5. Approximate overall length with tabs ends ..... <1230 mm
6. Diameter of lead body ..... 63.5 mm O.D.
7. Length between bottom flange and lead top .... 1090 mm
8. Helium leakage toward air ..... 10^{-7} mbar l/s
9. Helium leakage toward vacuum ..... 10^{-9} mbar l/s
10. Working position ..... Vertical to 45°
11. Heat losses at 5,000 amperes ..... 1.175 Watts/lead - kA
12. Heat losses at zero current ..... 0.705 Watts/lead - kA
13. Weld flange materials of construction ..... 304L Stainless Steel

SFr. 29'800.--

US$ 22'150.--
(alternative)

W (current lead)
5.875 × 2 = 11.75 W
3.525 × 2 = 7.05 W

The following tests will be performed and a Certification of Compliance provided:

1. Construction and dimensional checks.
2. Dye penetration test with acceptance criterion according to ASME VIII div. 2 article 9.2
3. Leakage testing per ASME V article 10 (hood method). Leak rate < 1 x 10^{-7} mbar l/s. This test will be performed on a mass spectrometer accurate to < 1 x 10^{-10} mbar l/s.
4. Insulation resistance against ground will pass testing at 0.7 kV c.c. for one minute in air @ room temperature with > 280 M Ohms resistance.

The following items are called out by AMI as expected values or exceptions to the Ansaldo specifications:

..... <2mm Hg at 5,000 amperes between 4.2K and 300K

<2.63 mbar

American Magnetics, Inc.

P.O. Box 2509, 112 Flint Road, Oak Ridge, TN 37831-2509
Phone: (423) 482-1056 Fax: (423) 482-5472
Internet: http://www.usit.net/ami E-mail: amagi@usit.net

June 20, 1997

Dear Mr. Piero Valente,

Enclosed are 3 copies of all certification documents for the custom 5000 ampere vapor cooled current leads, as required by your specification. The current leads are being shipped 6/20/97 by Burlington Air Express, Airbill #300619734, and should arrive in Chiasso, Switzerland by 6/27/97.

Regarding a technical issue, you should be careful when welding to the flange on the lower end of the current lead. You need to make sure that during welding that you do not overheat the flange. If you overheat the flange, then the solder used inside the current lead will melt. It is recommended that you keep the current lead tube less than 177°C during welding to prevent the solder from melting. The melting point of the solder is 220°C.

If you have any questions, please do not hesitate to contact us. Thank you for choosing AMI current leads for your project. We wish you much success in your work.

Sincerely,

Paul Arak

Paul E. Arakawa

cc: K. Schaefer
K. Efferson

cc/enc: Job file #4851

ANSALDO

Ansaldo Energia spa

Via N. Lorenzi 8, 16152 Genova GE Italia
Tel. (010) 6551, Fax 010 6556209, Telex 270006, C.P. 4657
Cod. Fisc. n. 00734630155, P.IVA n. 03279700102,
C.C.I.A.A. n. 320959 Genova, Iscr. Trib. Genova n. 55719
Sede Legale a Genova, Capitale L. 205.000.000.000.

TRASMISSIONE DOCUMENTI
Transmittal
No.

FOGLIO *Sheet* DI *of*

DATA *Date*

MODULO TRASMISSIONE DOCUMENTI
TRANSMITTAL FORM

DESTINATARIO
To
GAMBINA
COLLAUDO

COPIA A
Copy to

ALL'ATTENZIONE DI
Attention

ALL'ATTENZIONE DI
Attention

ORDINE ~~CLIENTE~~ FORNITORE
Customer order
BC 185364

IMPIANTO
Plant
BABAR

OGGETTO
Object

ORDINE ANSALDO COMP.
Ansaldo Comp. order

COMMESSA
Job nr.
0009EM

POS. *Item*	N. DOCUMENTO *Document nr.*	REV/DATA *Rev/date*	TITOLO DOCUMENTO *Document title*	(1)	(2)	(3)
1	F.C. 2-5-2-1124/1/86		CERTIFICATION DOCUMENTATION	C		CR
			FOR [illegible] CUSTOM SCOOP			
			VAPOR COOLED [illegible] LEADS			

(1) TIPO DI DOCUMENTO
Document type

- D — Disegno - *Drawing*
- S — Specifica - *Specification*
- P — Procedure - *Procedure*
- O — Ordine - *Order*
- C — Certificazione - *Reports*
- — .....

(2) MOTIVAZIONE INVIO
Submission code

- A — Approvazione - *Approval*
- I — Informazione - *Information*
- R — Restituzione - *Restitution*
- RI — Richiesta - *Request*
- CO — Commenti - *Comments*

(3) TIPO DI COPIA
Copy type

- OR — Originale - *Original*
- CR — Copia riproducibile - *Reproducible copy*
- CX — Copia - *Paper copy*
- MF — Microfilm - *Microfilm*
- — .....
- — .....

NOTE
Notes

Ansaldo Energia spa

UNITÀ EMITTENTE
Issuing unit
FMA/CRSP
P. VALENTE

☒ SI PREGA DI RESTITUIRE COPIA DEL PRESENTE DOCUMENTO FIRMATA PER RICEVUTA.
Please send back copy of the present document signed as receipt

COPIE INTERNE
Internal copies to

58288.5005

ARCHIVIO GEP

American Magnetics, Inc.

P.O. Box 2509, 112 Flint Road, Oak Ridge, TN 37831-2509
Phone: (423) 482-1056 Fax: (423) 482-5472
Internet: http://www.usit.net/ami E-mail: amagi@usit.net

COPY

CERTIFICATION DOCUMENTATION FOR ANSALDO CUSTOM 5000 AMPERE VAPOR COOLED CURRENT LEADS P.O. 12/97-8671/1/96

June 20, 1997

American Magnetics, Inc.

P.O. Box 2509, 112 Flint Road, Oak Ridge, TN 37831-2509
Phone: (423) 482-1056 Fax: (423) 482-5472
Internet: http://www.usit.net/ami E-mail: amagi@usit.net

CERTIFICATE OF COMPLIANCE

Customer: Ansaldo

Date: 6/13/97

Customer Purchase Order: 12/97-8671/1/96

Date of PO: 2/10/97

Product: 5000 A Custom Vapor Cooled Current Lead

Qty. Shipped: 2 ea.

It is hereby certified that the products listed below, supplied on the above referenced purchase order, have been measured to the following values and are acceptable to specification requirements. as stated in AMI Quotation No. 961218-V4851. Insulation resistance tested at 0.7kV c.c. for one minute in air @ room temperature.

Serial No.	Insulation Resistance
7G0610A	> 500 Mohms
7G0610B	> 500 Mohms

Charles Hargis

Charles H. Hargis
Quality Assurance

American Magnetics, Inc.

P.O. Box 2509, 112 Flint Road, Oak Ridge, TN 37831-2509
Phone: (423) 482-1056 Fax: (423) 482-5472
Internet: http://www.usit.net/ami E-mail: amagi@usit.net

CERTIFICATE OF COMPLIANCE

Customer: Ansaldo

Date: 6/13/97

Customer Purchase Order: 12/97-8671/1/96

Date of PO: 2/10/97

Product: 5000 A Custom Vapor Cooled Current Lead

Qty. Shipped: 2 ea.

It is hereby certified that the products listed below, supplied on the above referenced purchase order, have been measured and are acceptable to specification requirements as stated in AMI Quotation No. 961218-V4851. Both leads were tested as indicated on AMI Sketch No. SK4851D, and were found to be within the following specifications:

Max. helium leakage toward air :	10E-7 mbar l/s
Max. helium leakage toward vacuum :	10E-9 mbar l/s

Charles H. Hargis
Quality Assurance

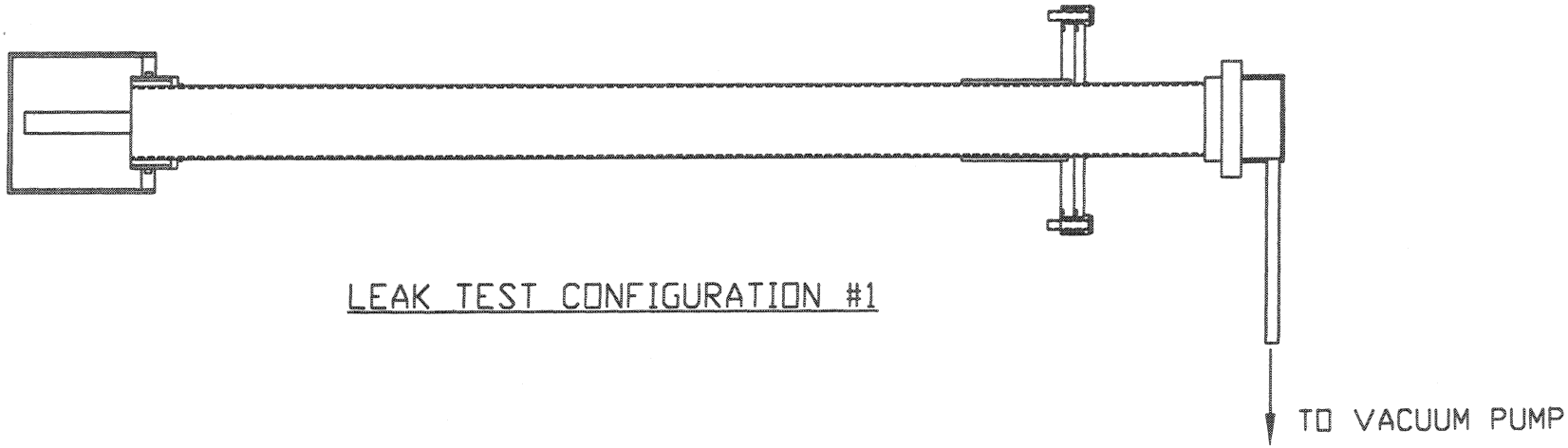

LEAK TEST CONFIGURATION #1

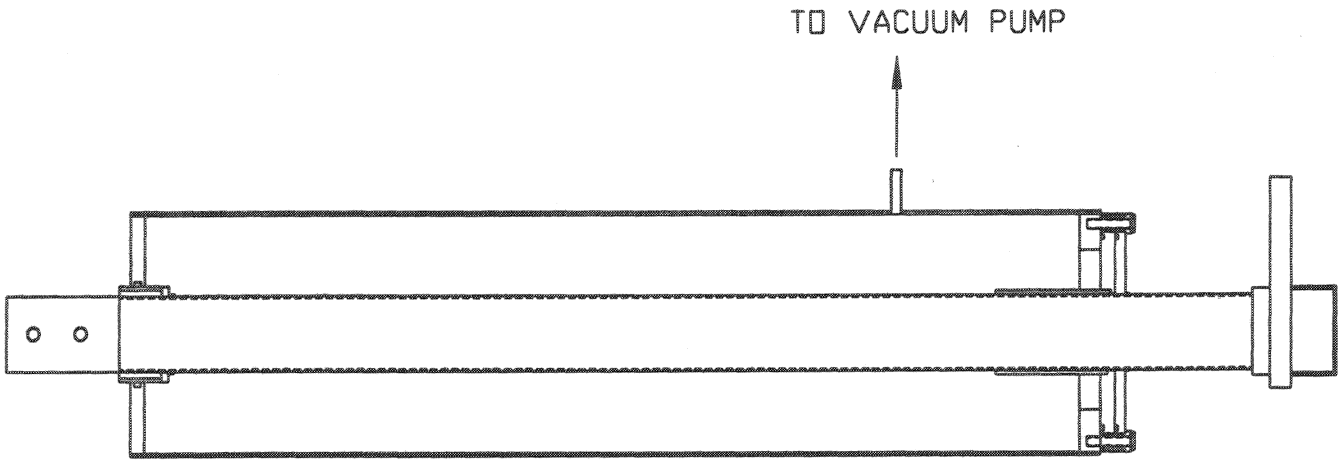

LEAK TEST CONFIGURATION #2

5000 AMP CURRENT LEAD

AMI
SKETCH
SK4851D
JOB# 4851
PEA
05/22/97

NOTES:

1. ALL LEAK TEST IN ACCORDANCE WITH APPLICABLE ASME CODE.
2. ALL WELDS SHALL BE DYE PENETRANT TESTED IN ACCORDANCE WITH APPLICABLE ASME CODE.

AMERICAN MAGNETICS, INC.
Number of Pages: 1
To: Piero VALENTE
ANSALDO
Fax Number: 011-39 1 06 55 64 85
From: Paul E. Arakawa
Date: May 22, 1997

NOTES:

1. DEWAR TOP FLANGE TO HAVE A 200 mm OUTSIDE DIAMETER PER CUSTOMER.
2. ALL WELDS TO BE VACUUM TIGHT AND TESTED IN ACCORDANCE WITH AMI QUOTATION NO. 961218-V4851.
3. ALL DIMENSIONS ARE IN MM UNLESS OTHER WISE NOTED.
4. CHAMFER G-10 TUBE & FLANGE TO ALLOW RELIEF WITH WELD ON MOUNTING FLANGE.

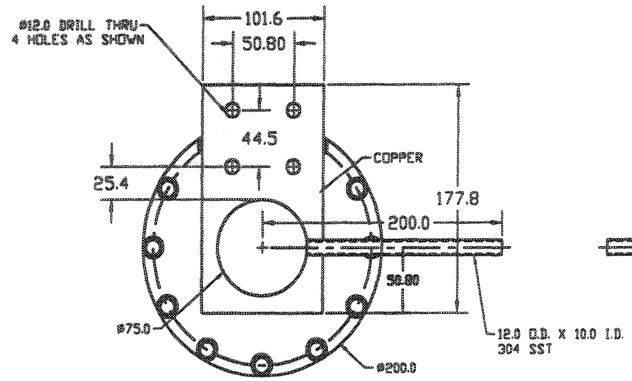

TOP VIEW A-A
LEFT HAND LEAD ASSEMBLY

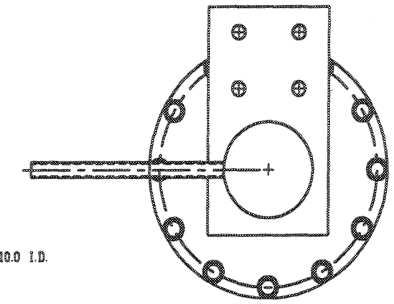

TOP VIEW A-A
RIGHT HAND LEAD ASSEMBLY

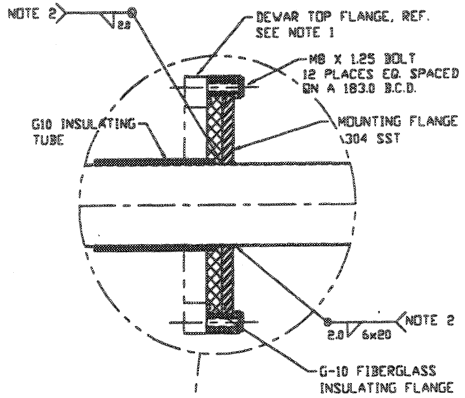

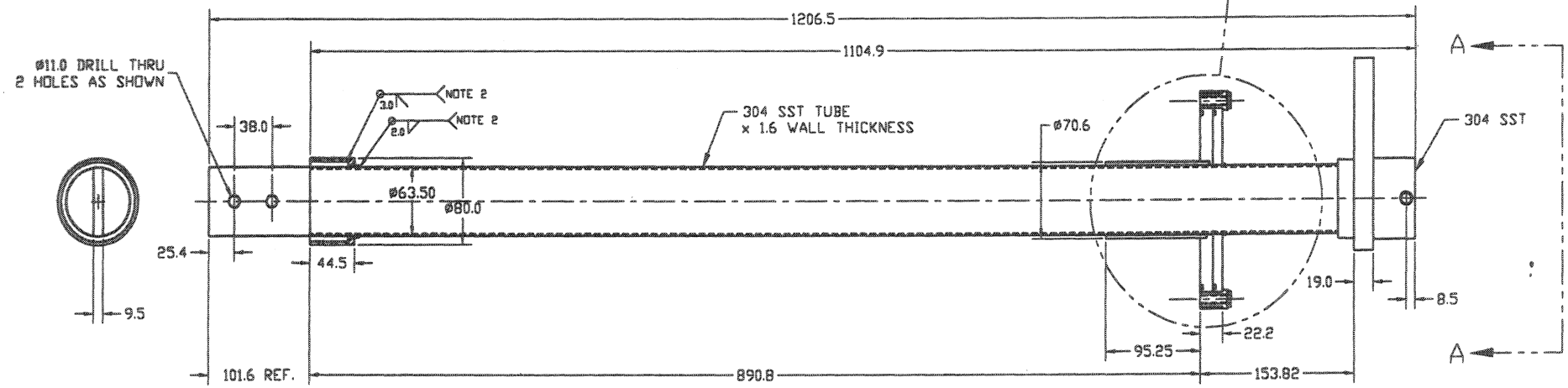

5000 AMP CUSTOM VCCL
REQ'D: ONE LEFT HAND ASSEMBLY
REQ'D: ONE RIGHT HAND ASSEMBLY

TOLERANCES UNLESS OTHERWISE SPECIFIED X DECIMALS +/- 0.8 MM XX DECIMALS +/- 0.3 MM ANGLES +/- 1.0°	AMERICAN MAGNETICS, INC.
	DESCRIPTION: ANSALDO 5000 AMP CUSTOM VCCL CUSTOMER DRAWING SHEET 1 OF 1
	DATE 5/02/97 · DRAWN BY PEA · REVISED BY · APPROVED
ALL DIMENSIONS IN MM UNLESS OTHERWISE SPECIFIED	SCALE 1/2 · SIZE D · DRAWING NO. 97-4851-2281

PATHWAY

LIQUID PENETRANT EXAMINATION REPORT

NO.	REV./DATE
DATE	PAGE OF

CUSTOMER American Magnetics, Inc PATHWAY NO.

CUSTOMER P.O. SPEC REQ'TS. Cust

UNIT I.D.	DRAWING & REV #	AREA OF INSPECTION	WELDER SYMBOL	WPS NO.	ACCEPT	REJECT	DATE/INSPECTOR/LEVEL
7G0610A	4851	P.T. Inspect			✓		JUN 13 1997
		6 welds					
		Per Dwg					
		Note &					
		Spec.					
7G0610B	4851	P.T. Inspect			✓		JUN 13 1997
		6 welds					
		Per Dwg					
		Note &					
		Spec.					

TRAVELER OPERATION/REMARKS: Ref. P.O.# 25297

TIN/BATCH #	
PENETRANT	96C07K
DEVELOPER	97B07K
CLEANER	96M02K

Penetrant Material Manufactures Certifications are on file at Pathway Bellows, Inc. The materials listed meet the contamination limits of:

- [x] ASME Sect V, Article 6
- [ ] Other
- [ ] NAVSEA 250-1500-1

THE ABOVE LISTED ITEMS WERE EXAMINED IN ACCORDANCE WITH PATHWAY BELLOWS LIQUID PENETRANT PROCEDURE 2Rev26 AND ARE ACCEPTABLE TO REFERENCED SPECIFICATION REQUIREMENTS.

Carl W. Loy

QUALITY ASSURANCE ENGINEER/QUALITY CONTROL SUPERVISOR

PAGE

PATHWAY "CAN-DO" IT

10/94

QUALITY ASSURANCE

CONFIDENTIAL INFORMATION PROPERTY OF PATHWAY BELLOWS, INC. COPYING OF THIS MATERIAL IS STRICTLY PROHIBITED UNLESS PERMISSION IS GRANTED IN WRITING

PATHWAY	HELIUM LEAK TEST REPORT	NO. HLT-1	REV. (3) 6/1/80
		DATE	PAGE OF

CUSTOMER American Magnetics, Inc. PATHWAY NO.

CUSTOMER P.O. SPEC. REQTS. Cust

UNIT I.D.	DWG. & REV. NO.	LEAK RATE	ACCEPT	REJECT	DATE/INSPECTOR/LEVEL
760610A	-4851	1×10^{-7}	✓		JUN 13 1997
760610B	-4851	1×10^{-7}	✓		JUN 13 1997
					JUN 13 1997

QUALITY ASSURANCE

REMARKS: Ref. PO.# 25297

MASS SPECTROMETER LEAK DETECTOR

S/N: BDBAD8004018 TRAVELER OPERATION NO.

THE ABOVE LISTED ITEMS WERE TESTED IN ACCORDANCE WITH PATHWAY BELLOWS HELIUM LEAK TEST PROCEDURE HLT 2 AND ARE ACCEPTABLE TO REFERENCED SPECIFICATION REQUIREMENTS.

Carl W. Loy

QUALITY ASSURANCE ENGINEER/QUALITY CONTROL SUPERVISOR

PATHWAY "CAN-DO" IT

AMERICAN MAGNETICS, INC.
P.O. BOX 2509
112 FLINT ROAD
OAK RIDGE, TN. 37831-2509
VOICE 423-482-1056 FAX 423-482-5472

FACSIMILE TRANSMITTAL SHEET

TO: Piero VALENTE	FROM: Paul E. Arakawa
COMPANY: ANSALDO	DATE: June 19, 1997
FAX NUMBER: 011-39 1 06 55 64 85	TOTAL NO. OF PAGES INCLUDING COVER: 2
PHONE NUMBER:	SENDER'S REFERENCE NUMBER: ANS-97-002
RE: APPROVAL REQUEST	YOUR REFERENCE NUMBER:

☐ URGENT ☑ FOR REVIEW ☐ PLEASE COMMENT ☑ PLEASE REPLY ☐ INFORMATION

NOTES/COMMENTS:

Dear Piero,

I enjoyed talking to you and the other gentleman (I did not get his name) by telephone on 6/18/97. I am providing clarification of the helium leak test which we performed on your 5000 ampere vapor cooled current leads.

We tested both leads, serial numbers 7G0610A and 7G0610B, as indicated on AMI sketch number SK4851D. In the actual test, we evacuated the leads to 1 x 10E-7 mbar l/s and then introduced helium gas around the canister. The helium spectrometer, with a sensitivity of 1 x 10E-9 mbar l/s, detected no leaks, as tested in configuration #1 or configuration #2 shown on the above referenced sketch.

We also certify that the leads were manufactured in according to AMI drawing number 97-4851-2281, with the following exceptions, one of which was verbally approved by you during our telephone conversation of 6/18/97.

Current Lead Serial No. 760610A

Specified Dimension (mm)	Actual Dimension (mm)
890.8	889.8
153.82	153.11

Current Lead Serial No. 760610B

Specified Dimension (mm)	Actual Dimension (mm)
890.8	889.8
153.82	152.32

Please respond to your approval/disapproval of the exception to the 153.82 mm dimension. Once we have this final approval we will ship immediately.

Please let me know if you need additional information.

Sincerely,

Paul Arak

Paul E. Arakawa

Ansaldo Energia s.p.a. GENOVA (ITALIA)	**ANSALDO** **TELEFAX** N° ++ 39 10 6556485	Data: 20/06/97 date: N. fax: Fogli n. :3 Pages no. :
DESTINATARIO *TO*	Societa' / Company : SCHAEFER c.c. AMI Sig. : Mrs. SCHAEFER c.c. P. ARAKAWA Fax n. / Fax no. : 0041 31 7476470 c.c. 001 423 4825472	
MITTENTE *FROM*	Sig. / Mr. : P. VALENTE Ufficio / Office : PMA/CRSP Tel. n. / Phone No. : 010/6556722	
OGGETTO *SUBJECT*	CURRENT LEADS BaBar your offer No. 8671/1/96 AMI fax June 19,1997	

Dear Paul,

if you had a sensitivity of 1 x 10-9 mbar l/s, it means that you can appreciate a leak of 1 x 10 -9 mbar l/s. If you wrote that there was no leakage it means that you are within contract specification:

Max helium leakage toward air = 10-7 mbar l/s

Max helium leakage toward vacuum = 10-9 mbar l/s

If that is true, I give you the final approval, but please send me a new leak test certification specifying the above written value.

For the dimensional point of view we also accept what written in the fax attached.

I remember you if you can advice us when the current leads should arrive to CHIASSO (CH).

P. Valente

SANDVIK
Sandvik Steel Canada
425 McCartney Street,
ARNPRIOR, Ontario K7S 3P3 Tel: 613-623-6501 Fax: (Admin) 613-623-7243

CERTIFIED MATERIAL TEST REPORT

CUSTOMER:
SANDVIK STEEL COMPANY
982 GRIFFIN POND ROAD
CLARKS SUMMIT, PA 18411
U.S.A.

SHIP TO:
S A M E

MILL ORDER
000003979

CUSTOMER ORDER & ITEM
097780 01

Tag: TUBE SALES
FOREST PARK

SPECIFICATION
ASTM A213-96B/A269-94A, ASME SA213 95 ED.
CPI T-2.3.35 REV 0
ATL659552 ✓
GA30051

MATERIAL
TP304/TP304L Seamless Stainless Steel Tube

1/2" x .035" avg/wall

WORK ORDER/HEAT NO.
*1 19895 437970 *1 19896 437970
*1 19897 437970 *2 19898 437970

* = Test Lot

HEAT ANALYSIS: Melt Source - Sandvik, Sweden Melt Method - Electric Furnace

Heat No.	C	Si	Mn	P	S	Cr	Ni	Mo	Co	Cu	N
437970 ✓	.005	.40	1.37	.025	.004	18.37	10.68	.30	.080	.210	.046

PRODUCT ANALYSIS

437970	.010	.35	1.38	.024	.006	18.27	10.74	.29	.078	.213	.044

MECHANICAL TESTS

TEST LOT	UTS psi	0.2% YS psi	El % on 2"	Hardness RB
1.	91,000	39,000	60	74
	90,000	39,000	64	76
2.	87,000	37,000	60	72
	90,000	37,000	60	72

TEST REPORTS
FEB 10 1997
ACCEPTABLE
BY

Eddy Current Examination - Acceptable
Alloy Verification - Acceptable
Flare Test - Acceptable
Flattening Test - Acceptable
Seamless, Cold Finished, Bright Annealed & Quenched
No weld repair has been performed on this material
Traceability to test lot is through Work Order Number linemarked on tubes.

This material was manufactured by Sandvik Steel Canada in Canada and meets the requirements of NAFTA origin.

This material has not come in contact with mercury or mercury-containing compounds.

This certification affirms that the contents of the report are correct and accurate and that all test results and operations performed by Sandvik Steel Canada or our subcontractors are in compliance with the material specification. The material is manufactured according to a quality system, approved and registered to ISO 9002.

I. Fraser, Superintendent Quality Systems and NDE/dh
97.01.20

AL Tech Specialty Steel Corporation

90 Willowbrook Avenue, Dunkirk, N.Y. 14048

CERTIFICATE OF TEST

ACCEPTING MILL	PURCHASE ORDER NO AND DATE		MILL ORDER NUMBER	DATE SHIPPED	INVOICE NO
WATERVLIET	CNJ-6-56939	09/11/96	0-0-90440-01	10/25/96	

SOLD TO:
TUBESALES INC
PROSPECT PLAINS ROAD

CRANBURY NJ 08512

SHIP TO:
TUBESALES
ENGELHARD DRIVE

MONROE TOWNSHIP NJ 08512
OFF EXIT 8A N J TURNPIKE

PRODUCT SPECIFICATIONS
AL TECH STAINLESS TYPE 304/304L
EXTRUDED MECHANICAL TUBING TO ASTM A-511-90 WITH
PROPERTIES TO TABLE 12 OF S.2.1 AND AMS-5639 REV F

ITEM	DESCRIPTION	QUANTITY	POUNDS
01	3.2500 .2500 17-24'		

R-59569

CHEMICAL ANALYSIS: ELEMENTS & PERCENTAGES

HEAT NO.	C	MN	P	S	SI	CR	NI	MO	CU	CO
A4147H	.017	1.78	.026	.019	.57	18.18	9.34	.52	.36	.113
CHECK	.021	1.78	.025	.018	.56	18.16	9.30	.52	.35	.110

MECHANICAL PROPERTIES:

HEAT NO.	TENSILE KSI	.2% YIELD KSI	% ELONG IN 2" OR 4D EQUIV.	RED AREA %	HARDNESS
A4147H	86.9	41.0	47.0	61.0	RB 76

MATERIAL FREE FROM MERCURY CONTAMINATION

NO WELD REPAIR WAS PERFORMED ON THIS MATERIAL

MATERIAL CONFORMS TO THE REQUIREMENTS OF THE SPECIFICATIONS LISTED ABOVE.

INTERGRANULAR CORROSION TEST: OK

STEEL MELTER: ATLAS SPECIALTY STEEL, WELLAND, ONTARIO - CANADA

TUBESALES
OCT 28 1996
ACCEPTABLE BY
TEST REPORTS

W. Jarosz-TEST CERTIFIER 10/25/96

TEST CERTIFIER

THE TEST RESULTS SHOWN ABOVE ARE CERTIFIED TO BE A CORRECT STATEMENT OF RECORDS THAT WERE DERIVED FROM TESTING SAMPLES OF THE MATERIAL

TELEDYNE RODNEY METALS

SCOTTDALE PLANT
PO BOX 302, SCOTTDALE, PA 15683
TEL# 412-887-9700 FAX# 412-887-9686

TEST CERTIFICATE NO. 1824

PURCHASE ORDER	OUR ORDER NO.	PAGE
CRP 6-59134	D5482	1 of 2

SOLD TO: TUBESALES
PROSPECT PLAIN RD
CRANBURY NJ

SHIP TO: TUBESALES
175 TUBEWAY
FOREST PARK GA

LOT NUMBER	SIZE O.D.	SIZE WALL	SIZE I.D	GRADE	HEAT NUMBER	ORDERED QUANTITY	SHIPPED QUANTITY	TEMPER	SMLS	WLD
D5482	1.2500	.035		321	A5A2403	1000 FT	740 FT 31 PCS	ANNEALED	Y	

TEST REPORTS

PART NBR	MELT SOURCE	SPECIFICATIONS
012572	SUMITOMO	MIL-T-8808B/8606C AMEN 2AMS 5557G/5570M

FEB 25 1997
ACCEPTABLE
BY

CHEMISTRY PROPERITIES

ELEMENT:	C	Mn	P	S	Si	Cr	Ni	N2	Cu	Mo	Ti	Fe
LADLE :	.07	1.37	.024	.004	.50	17.20	9.20	.020	.27	.29	.55	REM.

MECHANICAL PROPERITIES

.2% OFFSET Y.S. PSI	MPA	-- U.T.S. -- PSI	MPA	%ELONGATION IN 2 INCHES	HARDNESS	SURFACE ROUGHNESS	HYDROSTATIC
42,570		93,320		51.50		OD 10 RA	OK
52,700		94,590		54.00		ID 10 RA	
42,720		95,200		50.00			

FLATTENING	SURFACE CONDITION	LOOSE MATERIAL	MICROSCOPIC	PASSIVATION
OK	OK	OK	OK	OK

FLARING	GRAIN SIZE	FLANGE	INTERGRNLR CORROSION
OK	8	OK	OK

HEAT TREATMENT: ALL MATERIAL SUPPLIED ON THIS ORDER WAS SUBJECT TO A FINAL SOLUTION BRIGHT ANNEALING HEAT TREATMENT IN A CONTINOUS FURNACE. THE MATERIAL WAS HELD AT A TEMPERATURE OF 1900 DEGREES F MINIMUM FOR A SUFFICIENT TIME TO INSURE COMPLETE SOLUTION OF THE CARBIDES IN THE MATRIX. FOLLOWED IMMEDIATELY BY QUENCHING TO BELOW 800 DEGREES F IN LESS THAN THREE MINUTES. QUENCHING WAS ACCOMPLISHED VIA THE CONTACT H2 ATMOSPHERE AND NON-CONTACT CIRCULATING COOLING WATER (PER TRM PROCEDURE AP-2, REV. 13 DTD 6-16-95.)

NO WELD REPAIR WAS PERFORMED ON THIS PRODUCT

100% VISUAL AND DIMENSIONAL INSPECTION

DURING THE MANUFACTURING PROCESSES, TEST, AND INSPECTIONS, THIS MATERIAL DID NOT COME IN DIRECT CONTACT WITH MERCURY OR ANY OF ITS COMPOUNDS, NOR WITH ANY SINGLE BOUNDARY CONTAINMENT.

"ALL MATERIAL SUPPLIED IS COLD-DRAWN SEAMLESS"

"ALL ITEMS FURNISHED WITH THIS SHIPMENT ARE IN FULL COMPLIANCE WITH ALL PURCHASE ORDER AND SPECIFICATION REQUIREMENTS. THE TEST REPORTS REPRESENT THE ACTUAL ATTRIBUTES OF THE ITEMS FURNISHED AND THAT THE TEST RESULTS ARE IN FULL COMPLIANCE WITH ALL APPLICABLE SPECIFICATION AND ORDER REQUIREMENTS. WHEN TWO OR MORE SPECIFICATIONS ARE INCLUDED IN PURCHASE ORDERS REQUIRING SIMILAR TESTING TO DIFFERING REQUIREMENTS, TELEDYNE RODNEY METALS PERFORMS TESTING TO THE MORE STRINGENT REQUIREMENT."

S. M. Slemmie 2/20/97
AUTHORIZED SIGNATURE DATE

The above are true and correct results of tests on samples of the material. Sold results meet

RATH manufacturing co., inc.

RATH Micro Weld STAINLESS STEEL TUBING

2505 FOSTER AVENUE, JANESVILLE, WISCONSIN, 53547-0389 U.S.A.
PHONE 608-754-2222, FAX 608-754-0889

REPORT OF TESTS

SOLD TO:

CUST NO. 20852000
TUBESALES
175 TUBEWAY
PO BOX 747
FOREST PARK GA
30051

SHIP TO:

TUBESALES
175 TUBEWAY
FOREST PARK GA
30051

CUSTOMER ORDER NUMBER	PURCHASE ORDER NUMBER	DATE CERTED	SHIP VIA
C101549	ATL 7-51459	3/06/97	BESTWAY/PPD & ADD

ITEM NUMBER	DESCRIPTION	QUANTITY
1606010011101	2.500 x 16 GA. TP-304L B/A	1.000

CHEMICAL ANALYSIS (WT %)		MECHANICAL TEST	
HEAT:	270280	YIELD STRENGTH (0.2% OFFSET) P.S.I.	43,700
	.012	TENSILE STRENGTH P.S.I.	92,000
MN	1.470	ELONGATION (%)	56.0
P	.030	HARDNESS	RB 82
S	.016	FLANGE TEST	OK
SI	.520	FLATTENING TEST	OK
CR	18.190	REVERSE BEND	OK
NI	9.110	FLARE TEST	OK
MO	.320	REVERSE FLATTENING	OK
CU	.280	**NON-DESTRUCTIVE TEST**	
CO	.250	EDDY CURRENT	OK
N	.080	AIR UNDER WATER P.S.I.	
		HYDRO P.S.I.	
		ADDITIONAL TESTS/SUPPLEMENTS	
		1	
		2	
		3	
		4	
		5	
		6	

ORDER DATA

SA249/A249/A269/A554
SA249-A92, A249-94a,
A269-94a, A554-94
MATERIAL IS TP304/TP304L

PIECES	CUT LENGTH
50	20' RML

TEST REPORTS
MAR 11 1997
ACCEPTABLE
BY MK

Rath Mfg. Co., Inc. does not use mercury, lead, sulfur or any special metal alloy which is liquid at ambient temperature in it's product or facility. Weld repair was not used to manufacture this product.
Rath's stainless steel tubing manufacturing process does not use any of the products targeted in the U.S. Clean Air Act of 1990.

ATTEST:
We hereby certify that the material described herein has been inspected and tested to be in accordance with the applicable specifications as stated in the "ORDER DATA" portion of this report.

Technical inquiries regarding this form should be directed to the technical services group. All other assistance concerning this certification should be directed to Roberta Roberts.

BY: R. Roberts
MILL CERTIFICATION COORDINATOR

FORM NO. 20010

International Copper Company

MATERIAL CERTIFICATION
COPPER MILL PRODUCTS

CUSTOMER ORDER NO.	INVOICE NO.	INVOICE DATE
25166	1-90357	4/22/97

CUSTOMER

American Magnetic Inc.
P. O. Box 2509
Oakridge, Tn. 37831

SHIPPED TO

Same
112 Flint Road

MATERIAL

Alloy 110 Copper Bar to ASTM-B-187
1 pc 3/8" X 2-1/2" Bar X 48"
1 pc 3/4" X 4" Bar X 24"
1 pc 3" Dia. Rod X 24"

This is to certify that this material was manufactured pursuant to the requirements of the following SPECIFICATION: ASTM-B-187

ORDER DATA

QUANTITY	MILL LOT NO.	SIZE	DATE SHIPPED	
48"		3/8" X 2-1/2"	4/22/97	
24"		3/4" X 4"	4/22/97	
24"		3" Dia.	4/22/97	

MECHANICAL PROPERTIES AND TESTS

ROCKWELL HARDNESS	AVERAGE GRAIN SIZE, mm.	TENSILE STRENGTH PSI	YIELD STRENGTH	ELONGATION % IN

BEND TEST IN DEGREES	MERCUROUS NITRATE TEST	EXPANSION TEST	FLATTENING TEST	OTHER
		%		

CHEMICAL ANALYSIS

COPPER %	ZINC	LEAD	TIN	IRON	SILICON	MANGANESE	OTHER

SUBSCRIBED AND SWORN TO BEFORE ME

THIS _____ DAY OF _____ 19____

_____ NOTARY PUBLIC

Dewey E. Cato Jr

By Dewey E. Cato, Jr.
AUTHORIZED SIGNATURE

Tull

Certification of Materials

AMERICAN MAGNETICS INC.
112 FLINT ROAD

OAK RIDGE TN 37831

DATE 04/22/97

YOUR ORDER NO. P/O # 25166

TULL INVOICE NO. 0168874

Material

26568 1/2 304 HRAP S/S PLATE

Certification

We certify that the ORDER ITEM described on this document was shipped in accordance with your order. The producer of the material has certified to us that it was produced in accordance with the following specifications:

ASTM-A240, ASME-SA240, CONDITION A,

AMS-5513, UNS-S-30400

Robert F. Bryson
QUALITY MANAGER

Tull Metals
PO BOX 4725
NORCROSS GA 30091-4725
770-368-4200

ATLANTIC PLASTICS AND SUPPLY CO.

721 DREW AVENUE, N.C. • ROANOKE, VA 24012 • (540) 366-2323 • FAX: (540) 366-7151

CERTIFICATE OF COMPLIANCE

TO: American Magnetics DATE: 5-6-97
112 Flint Rd.
Oak Ridge, TN 37830

PART NUMBER:

PURCHASE ORDER #: 25197

MATERIAL: 2 1/2 X 3 G-10 tube

SPEC: L-P-509A

SIGNATURE: Laura Jolly

TITLE: office manager

ATLANTIC PLASTICS AND SUPPLY CO.

721 DREW AVENUE, N.C. • ROANOKE, VA 24012 • (540) 366-2323 • FAX: (540) 366-7151

CERTIFICATE OF COMPLIANCE

TO: American Magnetics DATE: 5-6-97
112 Flint Rd.
Oak Ridge, TN 37830

PART NUMBER:

PURCHASE ORDER #: 25197

MATERIAL: 1/2 X 12 X 24 G-10

SPEC: MIL-I-24768/2 GEE

SIGNATURE: Nina Folly

TITLE: office manager

DAMPING RESISTOR

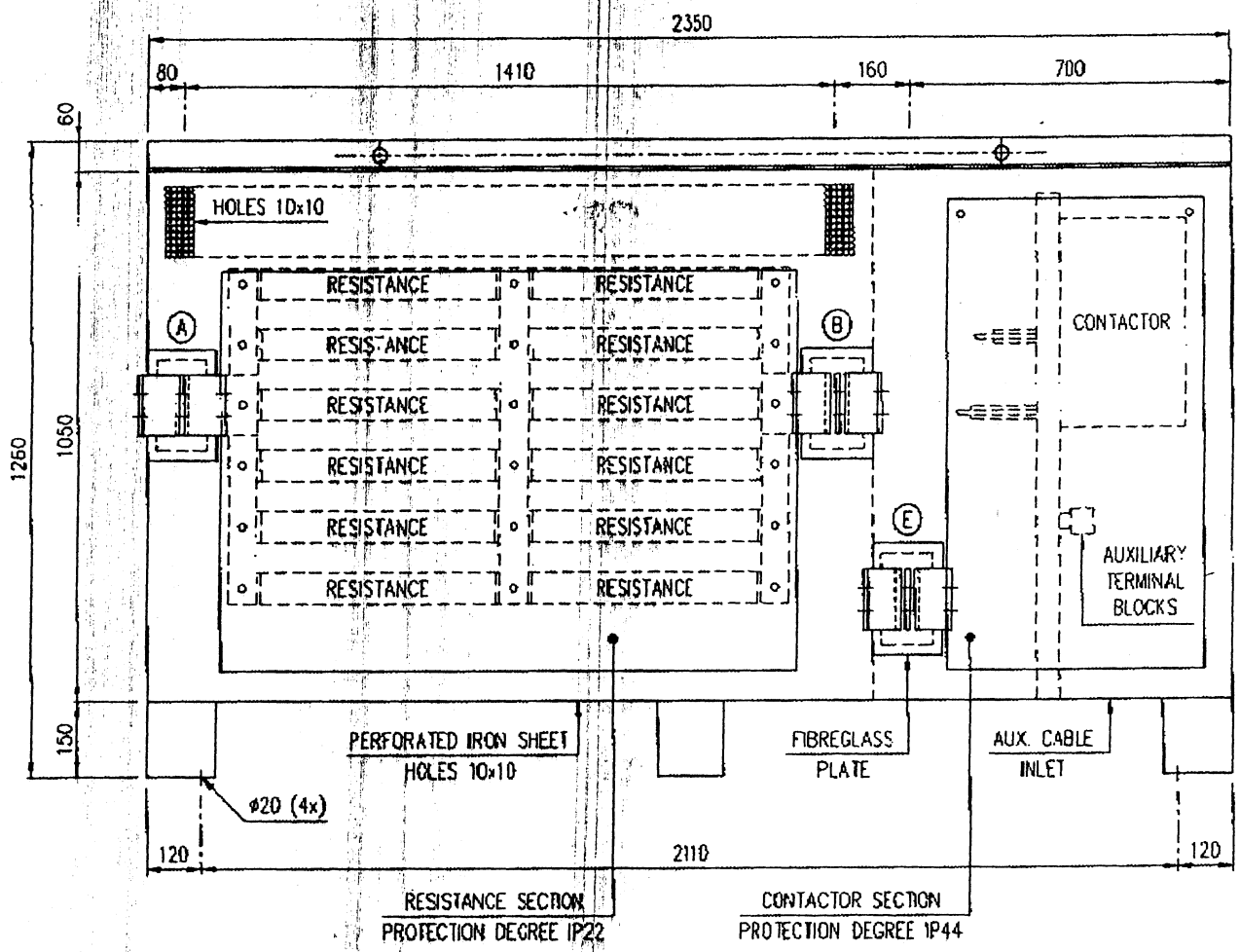

WEIGHT ~1200 kg

Rev.	Disegnato Drawn	Approvato Approved	Data Date	Descrizione Description
2	CZG	MF	28/04/97	TERMINALS MODIFIED
1	CZG	MF	05/03/97	TERMINALS A,B,C MODIFIED

Disegno di proprietà della MICROELETTRICA SCIENTIFICA che si riserva tutti i diritti di legge

Conferma Acknowledg	160/97	Disegnato Drawn	CZG	Data Date	13/02/97
Cliente Customer	ANSALDO EN.	Approvato Approved	MF	Data Date	13/02/97
N. Ordine P. Order	BCI87286 ACIS GNO	Certificato Checked	-	Data Date	-

Scala Scale 1 : 10

Revisione Revision: 1 2 3 4 5 6

File Disp. DR47046 113

Codice Code

MICROELETTRICA SCIENTIFICA MILANO ITALY

Descrizione – Description: DAMPING RESISTOR

OVERALL DIMENSIONS

Foglio Sheet 1 di of 3

Disegno N. – Dwg. No. DR47046

05/05/97 14:52 MICROELETTRICH

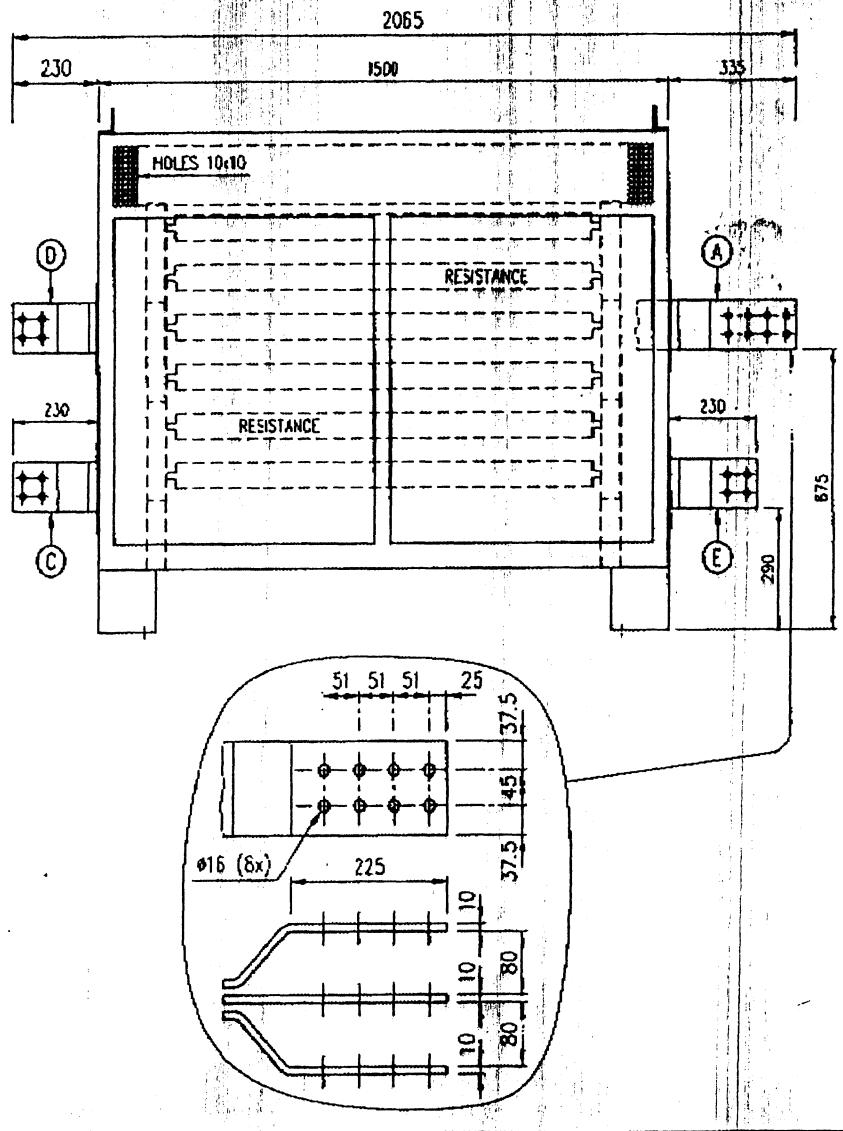

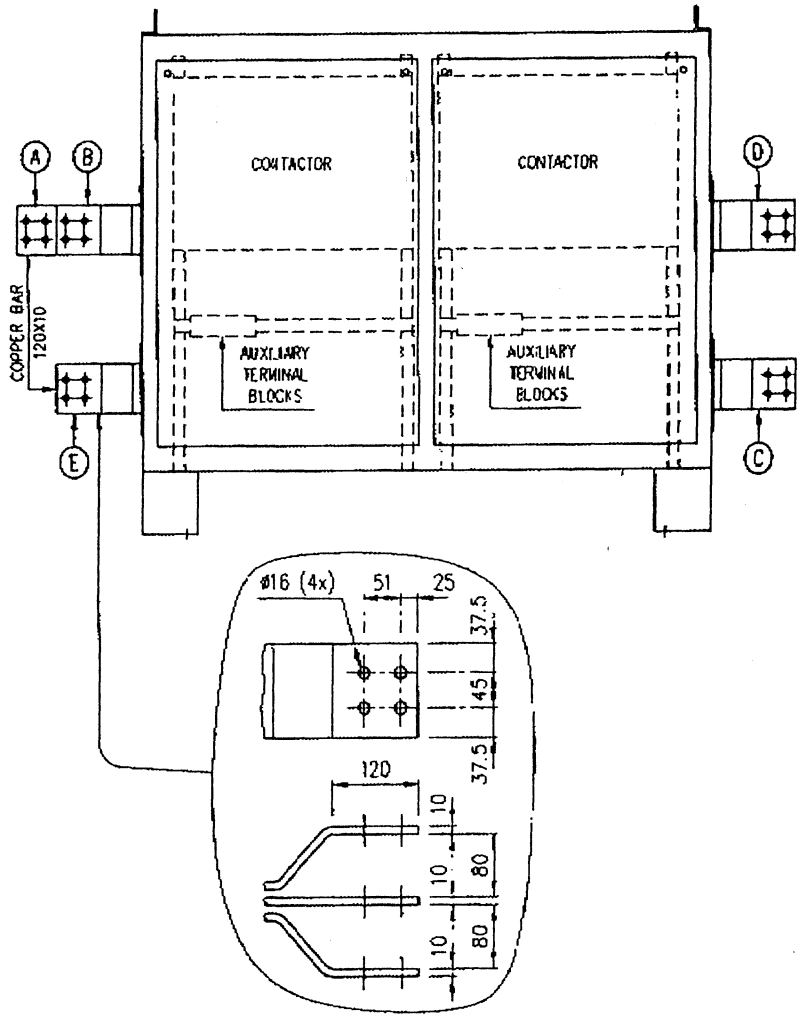

Rev.	Disegnato Drawn	Approvato Approved	Data Date	Description
2	CZG	MF	28/04/97	TERMINALS MODIFIED
1	CZG	MF	05/03/97	TERMINALS A,B,C MODIFIED

Disegno di proprietà della MICROELETTRICA SCIENTIFICA che si riserva tutti i diritti di legge

Conferma Acknowledg. 160/97	Disegnato Drawn CZG	Data Date 13/02/97	Scala Scale 1 : 12.5		
Cliente Customer ANSALDO EN.	Approvato Approved MF	Data Date 13/02/97	Revisione Revision	1 2	3 4 5 6
N. Ordine P. Order 8C187298 ACIS GNO	Controllato Checked -	Data Date -	File Disk DR47046A 113	Codice Code	

MICROELETTRICA SCIENTIFICA MILANO ITALY

Descrizione - Description

DAMPING RESISTOR

OVERALL DIMENSIONS

Foglio Sheet 2 di of 3

Disegno N. - Dwg. No.

DR47046

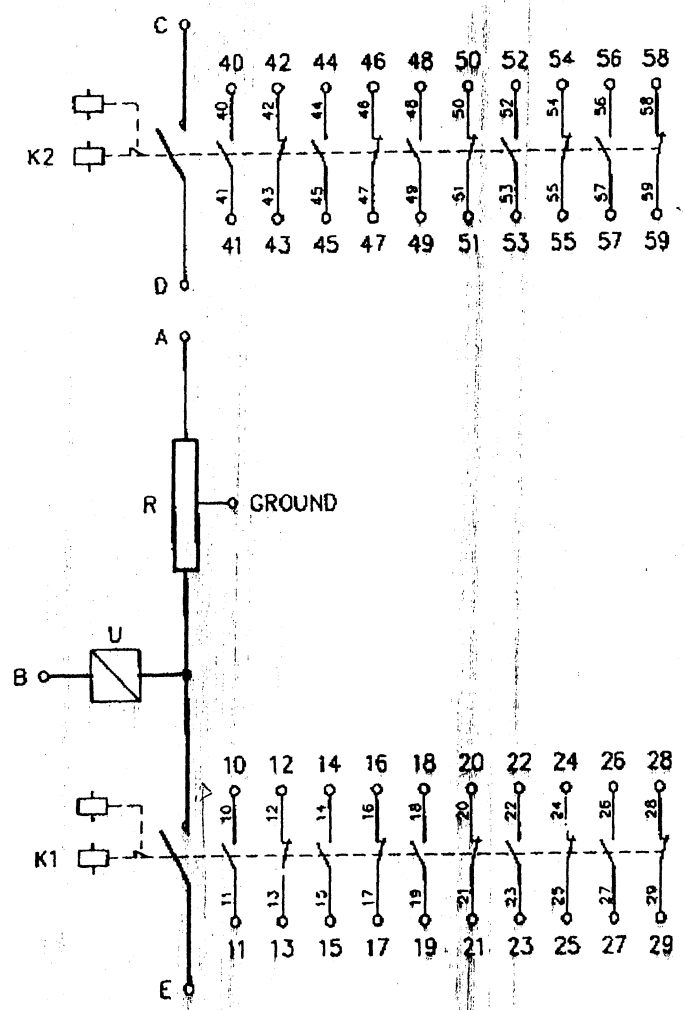

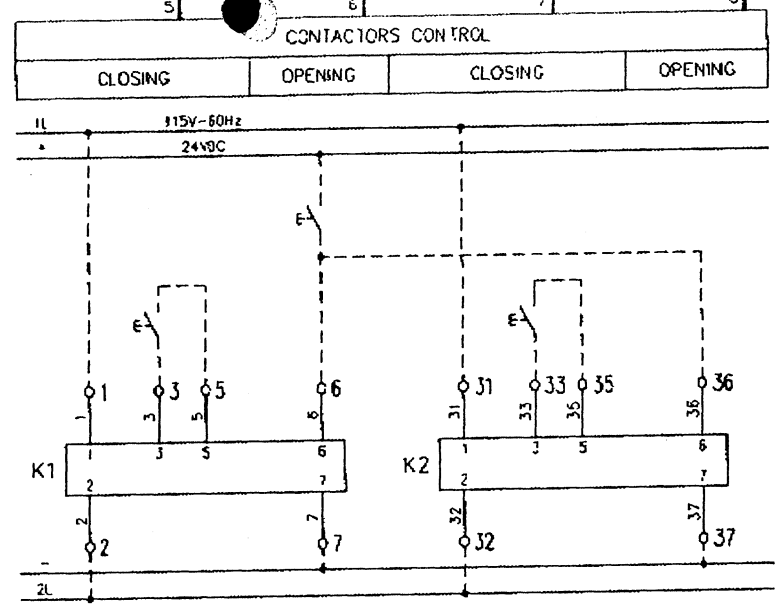

NO	NC
1	1
2	2
2	2
3	3
3	3

NO	NC
1	1
2	2
2	2
3	3
3	3

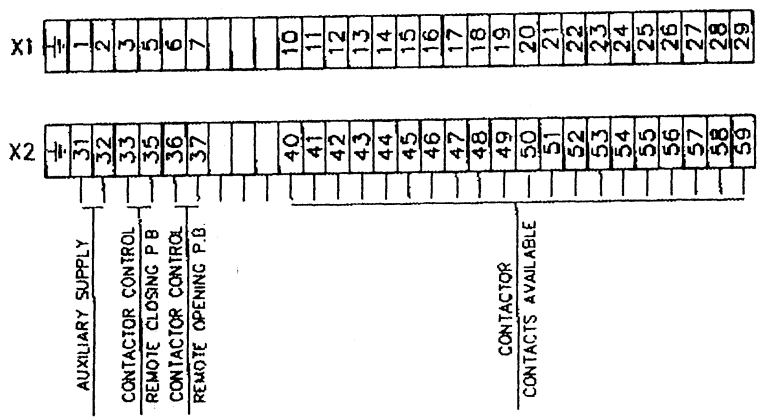

Rev.	Disegnato Drawn	Approvato Approved	Data Date	Descrizione Description
3	CZG	MF	28/04/97	POWER CIRCUIT MODIFIED
2	CZG	MF	14/04/97	POWER CIRCUIT MODIFIED
1	CZG	MF	05/03/97	OPENING CIRCUIT MODIFIED

Disegno di proprietà della MICROELETTRICA SCIENTIFICA che si riserva tutti i diritti di legge

Conferma Acknowledg. 160/97	Disegnato Drawn CZG	Data Date 13/02/97	Scala Scale 1 : 10
Cliente Customer ANSALDO EN.	Approvato Approved MF	Data Date 13/02/97	Revisione Revision 1 2 3 4 5 6
N. Ordine P. Order BC187296 ACIS GNO	Controllato Checked	Data Date	File DR470468 Disk 113

Codice Code

Foglio Sheet 3 di of 3

MICROELETTRICA SCIENTIFICA MILANO ITALY

Descrizione - Description
DAMPING RESISTOR
ELECTRICAL DIAGRAM

Disegno N. - Dwg. No.
DR47046

A4A0

Microelettrica Scientifica

MICROELETTRICA SCIENTIFICA s.p.a.
Via ALBERELLE, 56/58 - 20089 ROZZANO (Milano) ITALY - Telefono (02) 57.573-1 - Telefax (02) 57510940 - Telex 351265 MIELIT I

CERTIFICATO DI COLLAUDO RESISTENZE
N° BC0160/97/10

CLIENTE : ANSALDO ENERGIA SPA

ORDINE N° : BC 187296 ACIS GNO del 22/01/97

CONFERMA N° : 160/97 del 27/01/97 POSIZIONE : 1 QUANTITA' : 1

TIPO : Resistenza di scarica

DISEGNO N° : DR47046 fg. 1-2-3 rev.3

CODICE : 9830000

PRODUZIONE < GETTIMANA : 26
ANNO : 1997

N° DI SERIE : 160/97

TEMPERATURA AMBIENTE : 24°C

VALORE OHMICO SPECIFICATO A 20°C

0.068 ohm < - 5 % (0.0646 ohm) / + 5 % (0.0714 ohm)

MISURA VALORE OHMICO

0.0678 ohm

ESAME VISIVO : positivo

CONTROLLO DIMENSIONALE : positivo

VERIFICA VERNICIATURA SECONDO CICLO TM080395 (RAL 7030 - spessore > 90 µm) : positivo

RIGIDITA' DIELETTRICA per 60 sec. 50 Hz

TENSIONE DI PROVA 1° STADIO : 2500 V positivo

MISURA RESISTENZA DI ISOLAMENTO CON MEGGER DA 1000 Volt

> 100 Mohm positivo

NORME DI RIFERIMENTO : CEI 17-13/1 fascicolo 2463 E

ELENCO STRUMENTI USATI : Ohmetro elettronico CROPICO D04A (N° di strumento 0062)
Prova rigidita' dielettrica M.S. (N° di strumento 0014)
Megger elettronico ABB METRAWATT METRISO 1000D (N° di strumento 0065)

NOTE : /

FIRMA COLLAUDATORE FIRMA ENTE COLLAUDO ESTERNO

DATA : 30 GIU. 1997

Microelettrica Scientifica

MICROELETTRICA SCIENTIFICA s.p.a.
Via ALBERELLE, 56/58 - 20089 ROZZANO (Milano) ITALY - Telefono (02) 57.573-1 - Telefax (02) 57510940 - Telex: 351265 MIELIT I

CERTIFICATO DI COLLAUDO CONTATTORI
N° BC0160/97/11

CLIENTE : ANSALDO ENERGIA SPA

ORDINE N° : BC 187296 ACIS GNO del 22/01/97

CONFERMA N° : 160/97 del 27/01/97 POSIZIONE : 1 QUANTITA' : 2

TIPO : TAN 6000

N° DI POLI : 1 NA (2 x 3000 Amp. in parallelo)

CONTATTI AUSILIARI : 10 NA + 10 NC

TENSIONE NOMINALE : 600 V

CODICE : N0006000P1A00

PRODUZIONE < SETTIMANA : 13
ANNO : 1997

SERIAL N° : 160/97 - 001
160/97 - 002

ESAME VISIVO : positivo ✓ | VERIFICA FUNZIONAMENTO MECCANICO : positivo ✓ | MISURA RESISTENZA BOBINA : positivo ✓

INTERASSE DI MONTAGGIO : A = 600 mm

PROVA FUNZIONAMENTO ELETTRICO

TENSIONE DI COMANDO CHIUSURA 115 Vca 60 Hz < + 10 % (126 Vca) / - 20 % (92 Vca)

TENSIONE DI COMANDO APERTURA 24 Vcc < + 10 % (26 Vcc) / - 20 % (19 Vcc)

RIGIDITA' DIELETTRICA per 60 sec. 50 Hz

CIRCUITO PRINCIPALE

Terminali verso massa :
3500 V positivo ✓

Tra i contatti aperti :
3500 V positivo ✓

BOBINA DI COMANDO

Terminali verso massa :
2000 V positivo ✓

CONTATTI AUSILIARI

Terminali verso massa :
2000 V positivo ✓

NORME DI RIFERIMENTO : CEI EN 60947-4-1

ELENCO STRUMENTI USATI : Ohmetro elettronico CROPICO D04A (N° 0062)
Multimetro digitale ABB METRAWATT 1 MA-5D (N° 0056)
Prova rigidita' dielettrica PESATORI PAI K 15 (N° 0057)

NOTE : /

FIRMA COLLAUDATORE

FIRMA ENTE COLLAUDO ESTERNO

DATA : 30 GIU. 1997

TIE RODS

RADIAL TIE RODS

(x SCAC)

magn. (Ton)	F(Ton)	F (KN)	TS01	TS02	TS03	TS04	TS05	TS06	TS07	TS08	TS11	TS12	TS13	TS14	TS15	TS16	TS17	TS18	THEORIC	AVERAG	DL (mm)
TOTAL 0	0	0	0	0	0	0	0	0	0	0	0	0	0	0	0	0	0	0	0	0	0
8.16	2.04	20	529	504	498	494	494	486	479	483	510	525	487	472	497	452	492	490	465	493.25	0.337876
16.32	4.08	40	1046	1001	1008	995	999	998	968	972	985	1046	970	969	990	923	996	978	931	990.25	0.678321
25.092	6.273	61.5	1614	1545	1548	1540	1545	1545	1501	1500	1512	1603	1496	1516	1549	1441	1548	1513	1431	1532.25	1.049591

Ltie-rod 685
mm

26/12/97

radial

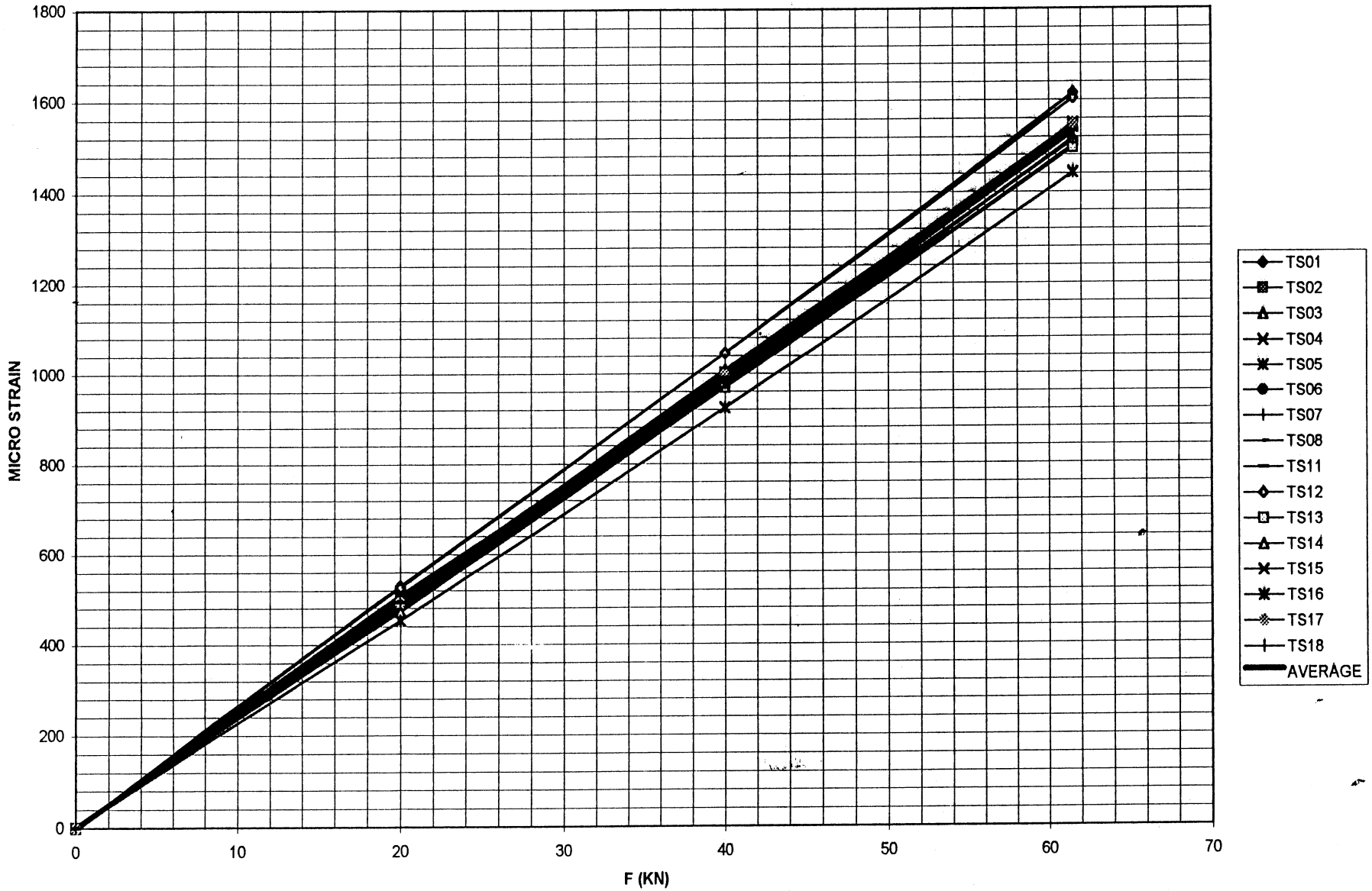
1800
1600
1400
1200
1000
800
600
400
200
0
MICRO STRAIN
0
10
20
30
40
50
60
70
F (KN)
TS01
TS02
TS03
TS04
TS05
TS06
TS07
TS08
TS11
TS12
TS13
TS14
TS15
TS16
TS17
TS18
AVERAGE

RADIAL

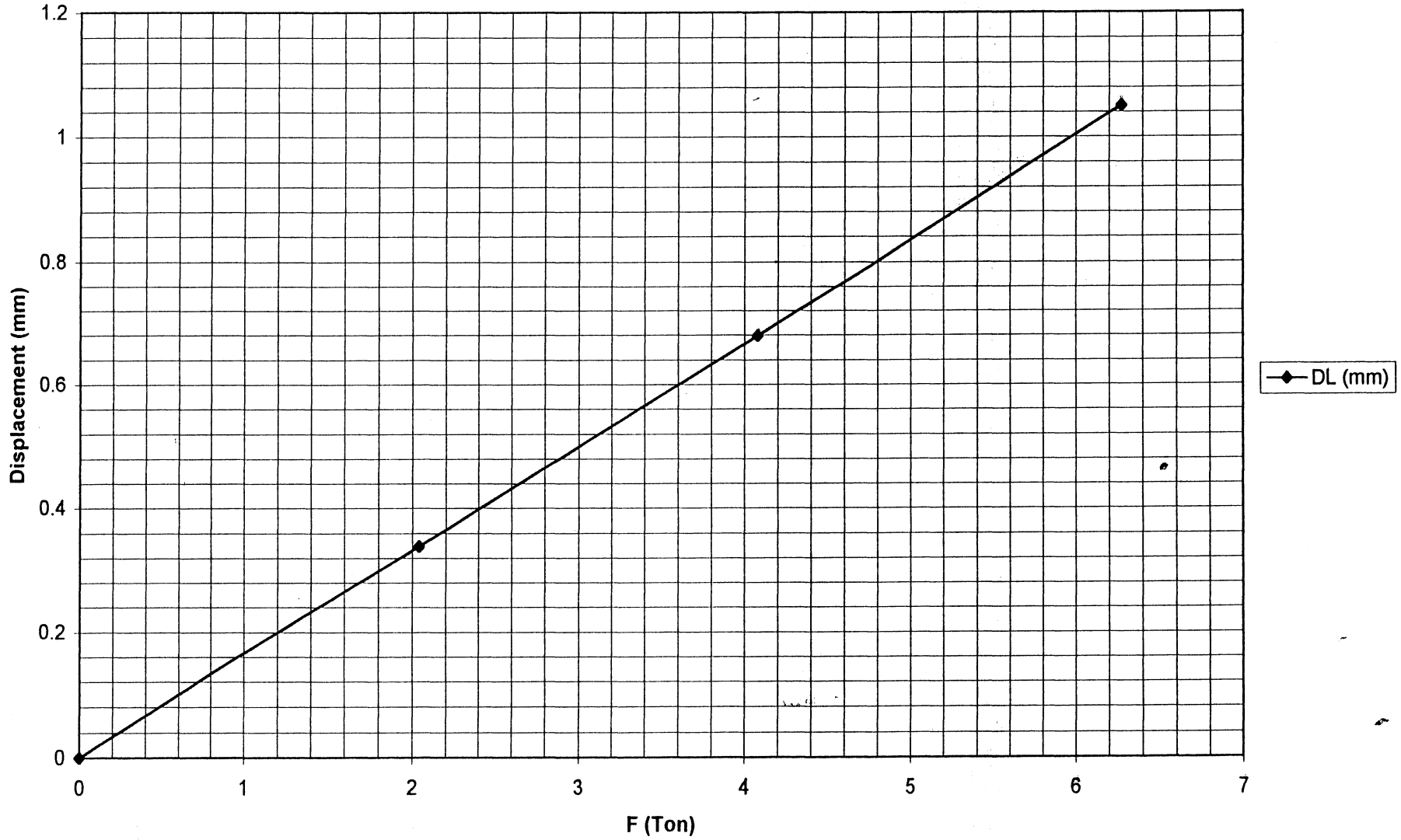

RADIAL

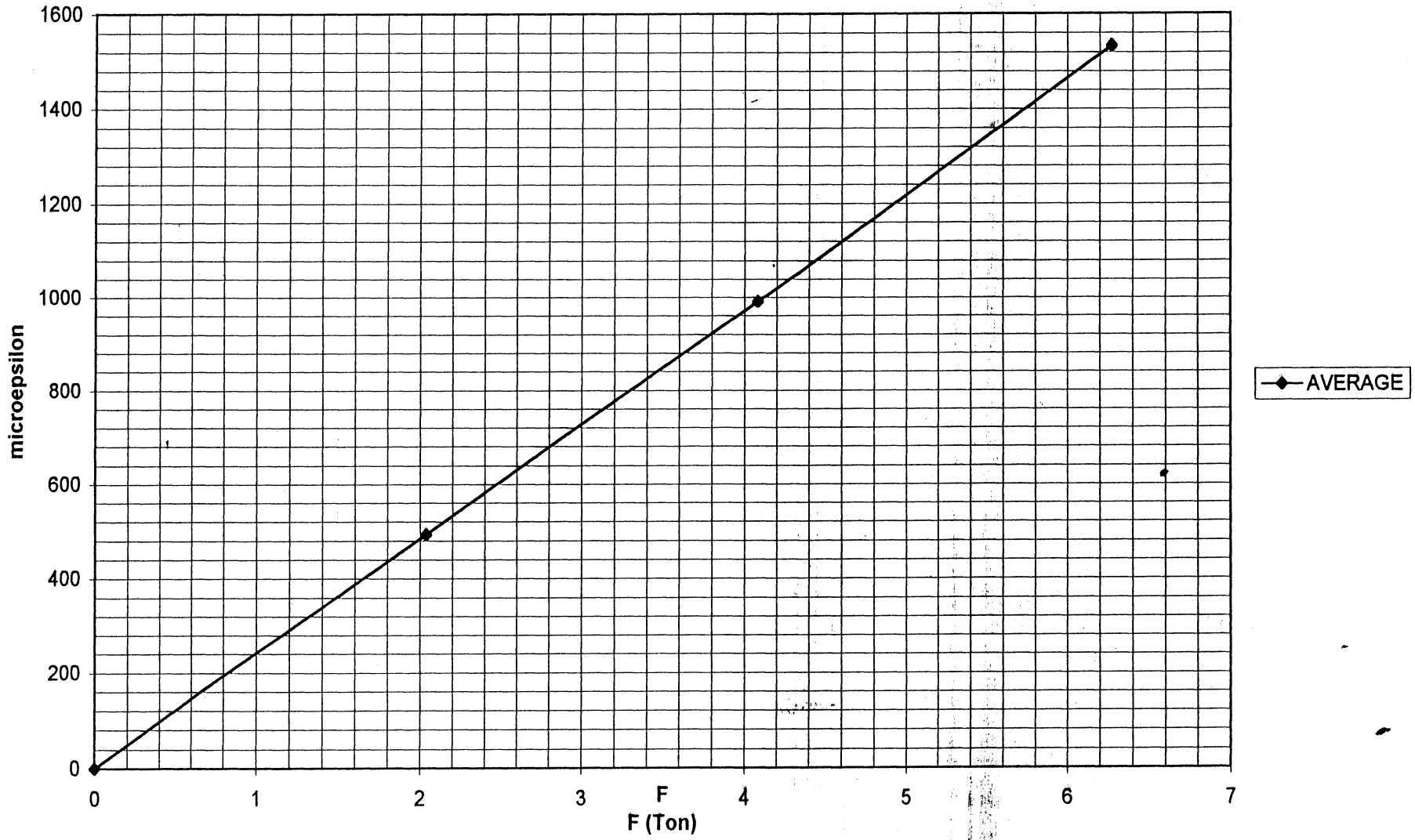
1600
1400
1200
1000
800
600
400
200
0
microepsilon
0
1
2
3
F
4
5
6
7
F (Ton)
AVERAGE

AXIAL TIE RODS

F (KN)	TIE ROD A	TIE ROD B	TIE ROD C	TIE ROD D	TIE ROD E	TIE ROD F	THEORIC
0	0	0	0	0	0	0	0
30	530	505	522	529	521	536	494
60	1066	1019	1059	1068	1043	1074	988
100	1785	1710	1780	1797	1743	1805	1647

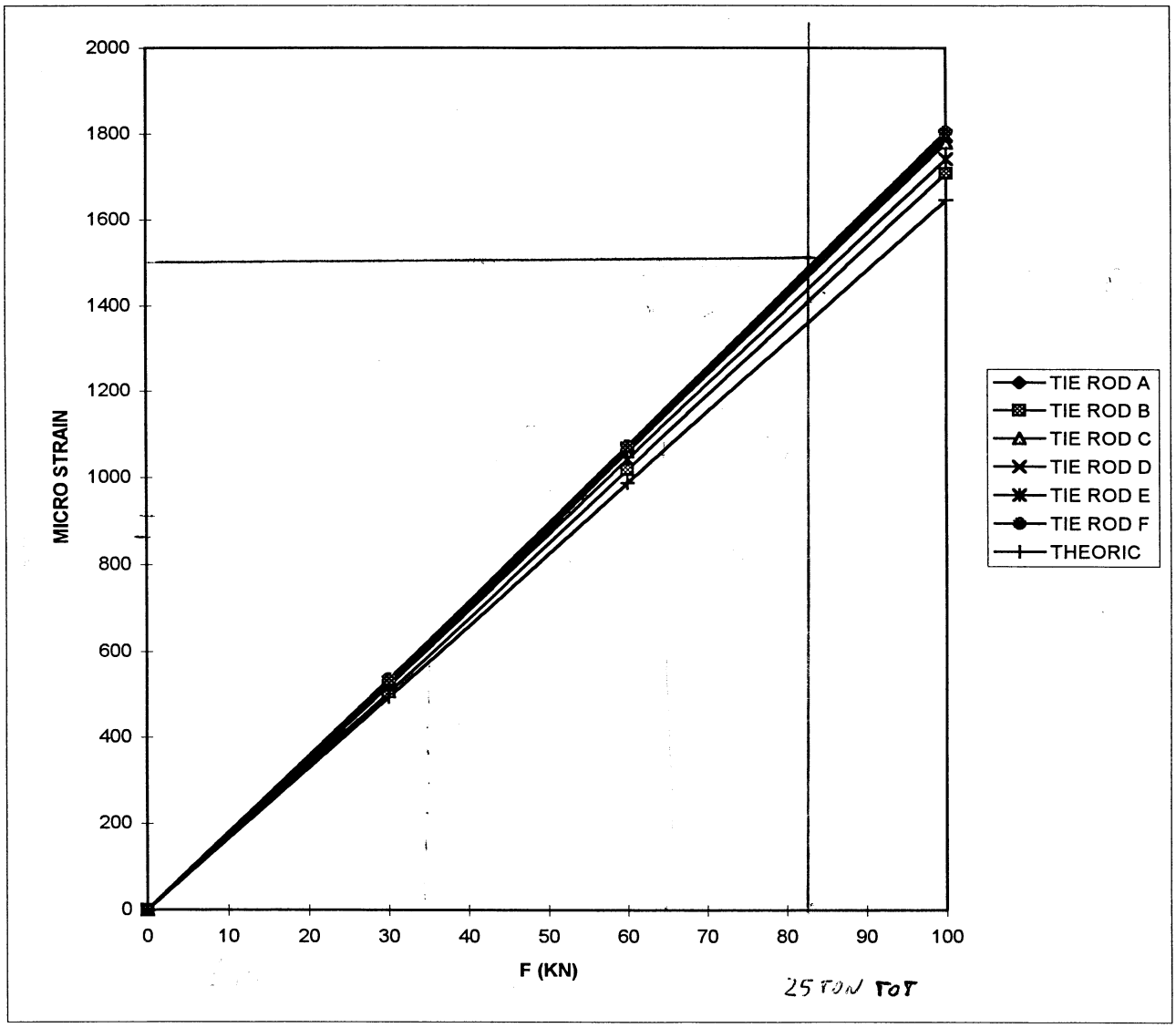

RADIAL TIE RODS

F (KN)	TS01	TS02	TS03	TS04	TS05	TS06	TS07	TS08	TS11	TS12	TS13	TS14	TS15	TS16	TS17	TS18	THEORIC
0	0	0	0	0	0	0	0	0	0	0	0	0	0	0	0	0	0
20	529	504	498	494	494	486	479	483	510	525	487	472	497	452	492	490	465
40	1046	1001	1008	995	999	998	968	972	985	1046	970	969	990	923	996	978	931
61.5	1614	1545	1548	1540	1545	1545	1501	1500	1512	1603	1496	1516	1549	1441	1548	1513	1431

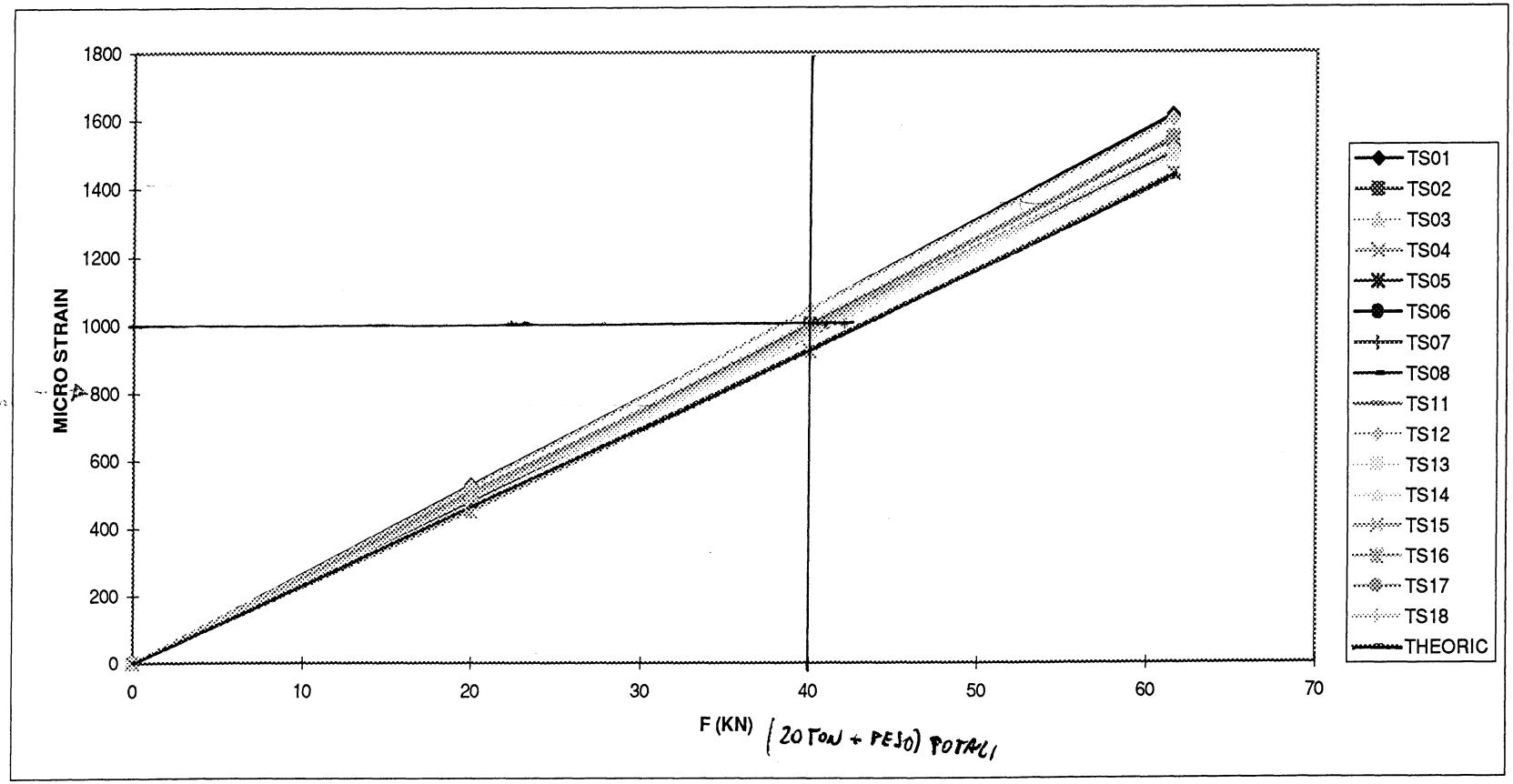

TEL 0114 2720081 FAX 0114 2761556 TELEX 517448 SMP G
Reg in England No 1919677 VAT Reg No 391 2525 55

NAMAS TESTING 1385

CERTIFICATE OF CONFORMITY

REGISTERED FIRM
Cert No. FM 12278
OAS 3640/65

SERIAL NUMBER SMP 52454

Customer	Consignee	Customer order number	SMP Order number
AMEC S.R.L. VIA TAGLIOLINI 42/44/46 N 16152 GENOVA	ANSALDO ENERGIA S.P.A. VIA N. LORENZI 8 16152 GENOVA	HS4461 /HP1 **Specification** ASTM B637- 93/ UNS N07718/ HYT C002 REV 0/ DIN 50049 / EN 10204 - 3.1.B	032606 **Process** Vacuum Induction Melted/ Electroslag Remelted.

Description of material supplied:
5 Billets. 1AO. 2AO. 3AO. 4AO. 5AO. 120mm Diameter As Forged Condition Ground Forging Billet.

Cast no	C	Si	Mn	P	S	Cr	Mo	Ni	Al	B	Co	Cu	N2	Nb	Sn	Ti	V	W	Zr	Ta	Fe	Pb		Ta+Nb
YES18450	.029 ✓	.14 ✓	.08 ✓	.005 ✓	.001 ✓	17.28 ✓	2.93 ✓	50.53 ✓	.55 ✓	.003 ✓	.01 ✓	.01 ✓		4.93 ✓		.98 ✓				.007				4.937 ✓

Test No	Tensile size	$R_{p0.2\%}$	Rm	A	Z	Impact	Hardness Test piece	Hardness On Bars	Notch tensile	Creep / rupture tests Stress	Temp	Time	D=Discontinued F=Fractured TPS=Total Plastic Strain
T-transverse L-longitudinal				%	%						°C	Hours	

Colour Code :- Blue/Black.

Heat Treatment:—	Metallographic:----	Non Destructive Tests:
		Ultrasonic Satisfactory to NDE 642.

Certified that, unless stated above, the whole of the above-mentioned material have been manufactured, tested and inspected in accordance with the terms of the contract/order applicable thereto and conform fully to the standards/specifications quoted hereon
The quality control arrangements adopted in respect of these supplies have accorded with the following conditions:-

VS.ORDINE N° GE-BC 195663 UMA GMO 00 DEL 18/07/97

AMEC S.r.l.
L'Amm.re Unico
(F. Biggi)

THE ABOVE MATERIAL IS STAMPED WITH TEST NO, CAST NO. SPECN NO. AND INSPECTORS STAMP THUS:

A C LONGLEY (Mrs)
Dated 1996
SPECIALED PRODUCTS LTD.

Signed
FOR AND ON BEHALF OF SPECIAL

SPECIAL TESTING WORKS LTD

Bacon Lane, Sheffield S9 3NH
Tel: 0114 244 1061
Fax: 0114 244 0444 Works
Fax: 0114 244 5566 Acc/Admin.

AI/2368/46

Testing No: 0046*

ROLLS ROYCE APPROVED LABORATORY Approval No. 11191

TEST REPO:
PAGE 1 OF

To Messrs:

Tested in the presence of

For:

For:

Order No: HY1317C

Date Received: 25-OCT-96

TEST No.	MARKS ON SPECIMEN	SIZE	CAST No.	TENSILES In accordance with A370:95a								IMPACT ASTM E23	BEND TEST	HARDNESS
				SECTION	AREA Sq. in	0.2 % PROOF N/mm2			MAX STRESS N/mm2	ELONGATION ON 1.414 %	REDUCTION OF AREA %	CHARPY 10 x 10 mm 2mm V Notch Joules		
MINIMUM SPECIFICATION REQUIREMENTS	ALLOY 718													
144436	YES 18450	4" dia x 4"	YES 18450	0.349	0.096	988.0			1222.0	27.4	36.1	Tested at -75 deg C Sc 80 70 Lateral Expansion 0.034" 0.066" 0.029" Shear Fracture 100% 100% 100%		
			Sol. Treated and Aged. 2 x Hardness Results: (ASTM E18) 1) 37 HRC 2) 38 HRC											

Analysis as given by Customer:

Representing:

~~In accordance with EN 10204 3.1B~~

Analysis shown as % by volume

Authorised Signatories
A. K. Beardshaw
K. S. Capes
C. Millward
S. R. Pearce
R. C. James
C. P. Garlick
M. Justice
M. D. Burns

No Copy is Authentic without the embossed seal and signature.

TEST RESULTS DO NOT IN ANY WAY COVER APPROVAL OF THE QUALITY OF MANUFACTURE OF THE MATERIAL

Signed
For and on behalf of
SPECIAL TESTING WORKS LTD.

AMEC S.R.L.
VIA TAGLIONINI 42/44/46 N
16152 GENOVA

AMEC S.r.l.
L'Amm.re Unico
(E. Biggi)

ANSALDO ENERGIA S.P.A.
VIA N. LORENZI 8
16152 GENOVA

VS. ORDINE N° GE-BC 195663

UMA GMO 00 DEL 18/7/97

SPECIAL TESTING WORKS LTD
Bacon Lane, Sheffield S9 3NH
Tel: 0114 244 1061
Fax: 0114 244 0444 Works
Fax: 0114 244 5566 Acc/Admin.

AI:2358:46

Testing No: 0046*

ROLLS ROYCE APPROVED LABORATORY Approval No. 11191

SDS DATE 25-APR-97

PAGE 1 Of

To Messrs:

Order No: HY3380A

Date Received: 25-APR-97

Tested in the presence of

For:

For:

TEST No.	MARKS ON SPECIMEN	SIZE	CAST No.	TENSILES In accordance with A370:96 SECTION	AREA Sq. in	0.2 % PROOF N/mm2			MAX STRESS N/mm2	ELONGATION ON 4 in %	REDUCTION OF AREA %	IMPACT ASTM E23 CHARPY 10 x 10 mm 2mm V Notch Joules	BEND TEST	HARDNESS
MINIMUM SPECIFICATION REQUIREMENTS.	ALLOY 718													
151162	YR18774	70mm dia x 4"	YR18774	0.248	0.048	938.0			1246.0	23.5	47.3	Tested at -75 deg F 97 100 93 Lateral Expansion 0.041" 0.042" 0.042" Shear Fracture 100% 100% 100%		

Solution Treated and Aged.

2 x Hardness Results: (ASTM E10)
1) 331 HB
2) 331 HB

Given by Customer:

Analysis shown as % by volume

Authorised Signatories
A. K. Beardshaw
K. S. Capes
S. R. Pearce
R. C. James
C. P. Garlick
N. D. Burns
R. M. Adams

No Copy is Authentic without the embossed seal and signature.

Signed S. R. Pearce
For and on behalf of
SPECIAL TESTING WORKS LTD.

TEST RESULTS DO NOT IN ANY WAY CONFER APPROVAL FOR QUALITY OF MANUFACTURE OF THE MATERIAL

AMEC S.R.L.

VIA TAGLIONINI 42/44/46 N
16152 GENOVA

ANSALDO ENERGIA S.P.A.

VIA N. LORENZI 8
16152 GENOVA

VS.ORDINE N° GE-BC 195663 UMA GMO 00

AMEC S.r.l.
L'Amm.re Unico
(F. Biggi)

Reg Office: Atlas Works, Sheffield, England
TEL 0114 2722381 FAX 0114 2761556 TELEX 547448 SMPG
Reg in England No 1919677 VAT Reg No 391 2525 55

NAMAS TESTING 1385

CERTIFICATE OF CONFORMITY

Cert No. FM 12276
QAS 3640 / 65

SERIAL NUMBER SMP 5542

Customer	Consignee	Customer order number	SMP Order number
AMEC S.R.L. VIA TAGLIOLINI 42/44/46 N 16152 GENOVA	ANSALDO ENERGIA SPA. VIA N. LORENZI 8 16152 GENOVA	HS4519HP **Specification** ASTM B637-93/UNS No.7718 -Chemistry only. HYT C002 Rev 0/ DIN 50049/ EN 10204-3.1.B	033515 **Process** Vacuum Induction Melted/ Electroslag Remelted.

Description of material supplied:
3 Billets. 1A0. 2A0. 3A0. 120mm Diameter. As Forged Condition Ground Forging Billet. Ø 36

Cast no	C	Si	Mn	P	S	Cr	Mo	Ni	Al	B	Co	Cu	N2	Nb	Sn	Ti	V	W	Zr	Ta	Fe	Pb	Nb+Ta
YR18774	.033 ✓	.10 ✓	.06 ✓	.005 ✓	.001 ✓	17.26 ✓	3.00 ✓	50.32 ✓	.65 ✓	.004 ✓	.06 ✓	.02 ✓		4.96 ✓		1.03 ✓				.007 ✓			

Test No	Tensile size	$R_{p0.2\%}$	Rm	A	Z	Impact	Hardness Test place	Hardness On Bars	Notch tensile	Creep / rupture tests Stress	Temp	Time	D=Discontinued F=Fractured TPS=Total Plastic Strain
T-transverse L-longitudinal				%	%						°C	Hours	

Colour Code: Blue/ Black

Heat Treatment:—

Metallographic:—

Non Destructive Tests:
Ultrasonic
Satisfactory to NDE 642.

Certified that, unless stated above, the whole of the above-mentioned material have been manufactured, tested and inspected in accordance with the terms of the contract/order applicable thereto and conform fully to the standards/specifications quoted hereon.
The quality control arrangements adopted in respect of these supplies have accorded with the following conditions:-

VS. ORDINE N° GE-BC 195663 UMA GMO 00
DEL 18/07/97

AMEC S.r.l.
L'Amm.re Unico
(F. Biggi)

THE ABOVE MATERIAL IS STAMPED WITH TEST NO. CAST NO. SPECN NO. AND INSPECTOR'S STAMP THUS:

A C LONGLEY (Mrs)
13 February, 1997
Signed
FOR AND ON BEHALF OF SPECIALTEO PRODUCTS LTD

Terraspan UK Limited

The Nickel Alloy Specialists

135 MANOR FARM ROAD, GREET
BIRMINGHAM B11 2HT
ENGLAND
Telephone UK :0121-707 8322
FACSIMILE UK :0121-706 1762
FACSIMILE INTL :0 44 121 706 1762
E-MAIL :sales@terraspan-uk-ltd.demon.co.uk

Fax

Att. Dott. VALENTE
27/5/97

To: Ebertrade SAS
Name: Mr Balboni
Date: 13/05/97
Pages: 1
Re: MFB 67122
From: Mark Phillips
Message:

RE: AMEC SRL - ORDER NUMBER : 08 05 97

Please find below the Mechanical Values of the Stock Material

Size mm	0.2% P.S. N/mm2	Max Stress N/mm2	Elongation on 1.4" %	Red/Area %	Charpy 10x10mm 2mm V Notch Tested at -75 Deg F ASTM E23(Joules)		
19.05	968	1222.0	27.4	36.1	82	80	70
36	938	1246.0	29.5	47.3	97	100	93

Size mm	Lateral Expansion	Shear Fracture	Hardness ASTM E18
19.05	0.034", 0.026", 0.029"	100%,100%,100%	37, 38 HRC
36	0.041", 0.042", 0.042"	100%, 100%, 100%	331, 331 HB

Please confirm that the above figures are within the required limits for the customer so that we can proceed with the Order processing

Thanks and Regards

Mark Phillips

TOTALE P.02

EBERTRADE sas
di A. Balboni & C.
materiali e tecnologie per applicazioni industriali

Fax nº 1145
Date 27/05/97

Via G.B.Piranesi 26 - 20137 Milano - Tel. 02/70 00 39 94 - fax 02/70 00 39 70

To : ANSALDO - GENOVA
Attention : DOTT. VALENTE
Re: BARRE IN ALLOY 718

Come da conversazione telefonica, ritrasmettiamo copia della documentazione relativa al barrame disponibile presso la ns rappresentata TERRASPAN LTD / UK :

COMPOSIZIONE CHIMICA

barra dia	19,05 mm	36 mm	25,4 mm
cast n.	ES 18450	YR 18774	YR 18775
C	.029	.033	.037
Si	.14	.10	.10
Mn	.08	.06	.06
P	.005	.005	.005
S	.001	.001	< .001
Cr	17.28	17.26	17.25
Mo	2.93	3.00	2.99
Ni	50.53	50.32	50.24
Al	.55	.65	.60
B	.003	.004	.004
Co	.01	.06	.05
Cu	.01	.02	.02
Nb	4.93	4.96	4.97
Ti	.98	1.03	1.01
Ta	.007	.007	.005
Nb+Ta	4.9 - 7	4.9 - 7	4.7 - 7.6

In allegato, ritrasmettiamo copia del fax della ns rappresentata riportante le caratteristiche meccaniche per le barre dia 19,05 e 36 mm.

A Vs disposizione per ogni ulteriore necessità, cogliamo l'occasione per porgere cordiali saluti

Ebertrade sas
A. Balboni

TOTALE P.01

6485

EBERTRADE SAS

di A. Balboni & C.

materiali e tecnologie per applicazioni industriali

Via G.B.Piranesi 26 20137 Milano - Tel. 02/70 00 39 94 - fax 02/70 00 39 70

Fax n° MO

Date 23/05/97

Page 1 of 2

Att.ne Ing. Dormicchi
Gallerio

To : AMEC SRL
Attention : SIG FRANCO BIGGI
Re: VS ORDINE FAX 900
NS REF 5011/MFB 67122

CON RIFERIMENTO AL FAX DELLA SPETT.LE ANSALDO DA VOI INVIATOCI, VI TRASMETTIAMO QUI DI SEGUITO IL TESTO DI RISCONTRO DELLA NS RAPPRESENTATA TERRASPAN UK:

"""

RINGRAZIANDOVI PER IL VS FAX RIGUARDANTE LE BARRE IN ALLOY 718, ABBIAMO IL PIACERE DI RISPONDERVI COME SEGUE:

A) IN ALLEGATO VI TRASMETTIAMO IL CERTIFICATO DI ANALISI CHIMICA DI TUTTE LE POSIZIONI E CIOE':
DIAM 19.05 / DIAM 36 MM E DIAM 25,4 SE RICHIESTO QUALE ALTERNATIVA.

B) TUTTE LE DIMENSIONI HANNO SUBITO UN TRATTAMENTO TERMICO STANDARD DI:
°F 1025 °C X 2 ORE X WQ (Solution Anneal) +
°F 1800 °C X 6 ORE X AC (Aged)

C) Noi riteniamo che la filettatura per rullatura indurisca il materiale ma non siamo in grado di stimare di quanto. La filettatura per taglio dovrebbe avere minore effetto.
Probabilmente la migliore soluzione sarebbe di rullare i componenti nelle condizioni di fornitura e poi stara' al cliente di effettuare un trattamento di indurimento con invecchiamento per raggiungere il piu' vicino possibile i valori desiderati

d) Se viene scelta la via della filettatura per taglio e viene richiesta la dimensione alternativa, possiamo offrire il diametro 25,4 x 25 metri a Sterline 93/metro.

Confidiamo che quanto sopra possa essere soddisfacente per il cliente ed in attesa di ricevere Vs. ulteriori istruzioni, porgiamo cordiali saluti
Firmato da: TERRASPAN UK/LTD """

IN ATTESA DI VS DECISIONE IN MERITO, RESTIAMO A VS DISPOSIIZONE PER ULTERIORI CHIARIMENTI O NECESSITA' E PORGIAMO I NS MIGLIORI SALUTI
EBERTRADE SAS

26-MAG-1997 06:32 AMEC SRL +39 10 6509414 P.01

ORIGINA

SSM
STUDIO SPERIMENTALE METALSIDERURGICO s.r.l.
Via degli Artigiani, 60 - 16162 GENOVA Bolzaneto
Tel. (010) 710.259 - 713.751 - Telefax 710.566
autorizzato L.S.P.E.S.L. - R.I.M.A. - A.B.S. - I.I.S. - M.M.C. - SV - NV - LR.

COLLAUDO / INSPECTION	SAGGIO SEM. / TEST	DATA / DATE	CERTIFICATO / CERTIFICATE	PAGINA / PAGE
SSM	N. 4766	1/08/1997	N. 2094	N. 1
	ORDINE / ORDER: Odt n°165		SAGGIO / TEST: N. A - B	

CLIENTE / CUSTOMER: AMEC SRL GENOVA GE

PROVE MECCANICHE EFFETTUATE SU / MECHANICAL TESTS ON: TONDI "ASTM B 637 UNS N07718"
** A (Diam.35) - B (diam.20)

PLACCA / PLATE — COLATA / HEAT — DIMENSIONI DEL MATERIALE / DIMENSION OF MATERIAL mm **

STRIPPO E POSIZIONE ORIENTATION	SPESSORE LARGHEZZA DIAMETRO THICKNESS and WIDTH or DIAMETER mm	PROVA DI TRAZIONE / TENSION TEST: AREA DELLA SEZIONE SECTION mm²	LUNGHEZZA UTILE GAGE LENGTH mm	SNERVAMENTO YIELD STRENGTH TOTALE TOTAL KN	SNERVAMENTO N/mm² min. 1034 max	ROTTURA TENSILE STRENGTH TOTALE TOTAL KN	ROTTURA N/mm² min. 1275 max	ALLUNGAMENTO ELONGATION TOTALE TOTAL mm	ALLUNGAMENTO % min. 12,0 max	STRIZIONE REDUCT OF AREA % min. 15 max	PIEGA BEND TEST a = d =	RESILIENZA IMPACT TEST TIPO TYPE TEMPERATURA °C TEMPERATURE min. sing. min. for 1. J min. medio min. aver.
L (A)	12,50	122,71	50,0	99,90	814	144,20	1175	63,0	26,0	44,64		
L (B)	12,50	122,71	50,0	100,50	819	145,40	1185	62,2	24,4	44,64		

ANSALDO ENERGIA S.P.A.
VIA N.LORENZI 8
16152 GENOVA

VS. ORDINE N° GE-BC 195663 UMA GMO 00
DEL 18/7/97

AMEC S.R.L.
VIA TAGLIOLINI 42/44/46 N
16152 GENOVA

AMEC S.r.l.
L'Amm.re Unico
(F. Biggi)

NOTE / REMARKS

IL LABORATORIO / THE LABORATORY — IL CLIENTE / THE CUSTOMER — IL COLLAUDATORE / THE INSPECTOR

G. BOSSINI

TOTALE P.07

TOTALE P.02

AXIAL TIE RODS

F (KN)	TIE ROD A	TIE ROD B	TIE ROD C	TIE ROD D	TIE ROD E	TIE ROD F	THEORIC
0	0	0	0	0	0	0	0
30	530	505	522	529	521	536	494
60	1066	1019	1059	1068	1043	1074	988
100	1785	1710	1780	1797	1743	1805	1647

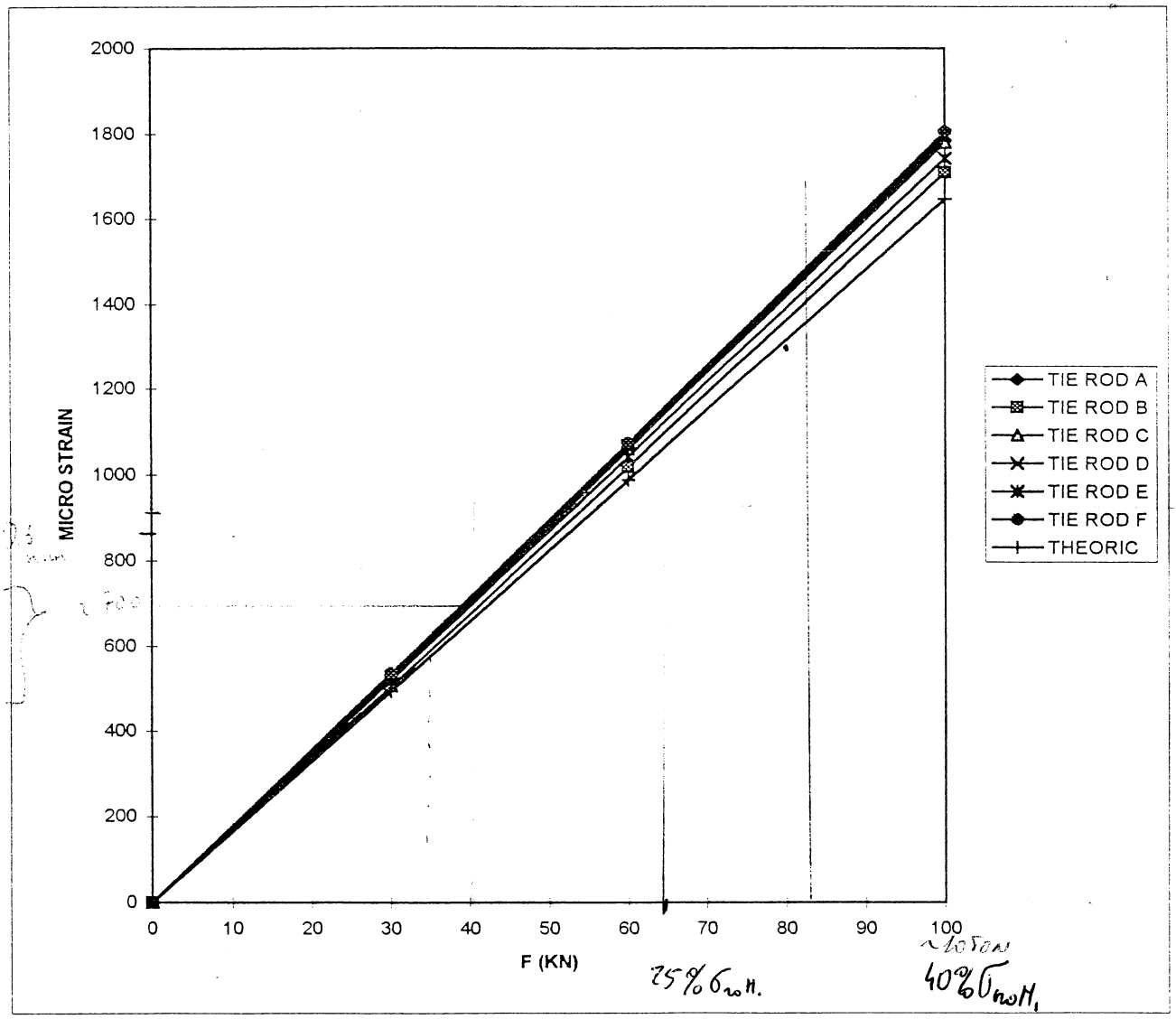

2056/97

Tirante assiale per Babar

1) 258.000 retto filett. M. 18

2) Tirante radiale
196000 KN retto filettatura M 16

2056/97/1

50.000N

30-7-97

etiel

100 KN

Fiducie no 2

30/07/97

25/3 Tiranti = 8.33 T per tirante → 81.6 KN ASSIALI (4.2) $\sigma = \frac{8330}{216} = 39 \frac{kg}{mm}$

(300) $\sigma = \quad = 31 \frac{kg}{mm}$

$20 + 7.4 = 27.4 \times \frac{0.577}{4} = 3.96 T \times 0.1020 = 38.8$ KN RADIALI $\sigma = \frac{3960}{167} = 24 \frac{kg}{mm^2}$

TIRANTI

PESO

DATI PARTENZA MATERIALE: $\times 0.1020$

	0.2% P.S. (N/mm^2)	kg/mm^2	MAX STRESS (N/mm^2)	kg/mm^2
ϕ 19.05	968	98.7	1222	124.6
ϕ 36	938	95.7	1246	127.1

TIRANTI ASSIALI FORZE MAGN. A 300 K

$F = 25$ TON $\sigma_{AMM.} = \sigma_{ULT.}/4 = 124.6/4 = 31.15 \ kg/mm^2$

$A_{TOT\,MIN} = F/\sigma_{AMM} = 25000/31.15 = 802.6 \ mm^2$

$A_{TOT\,MIN}$ PER TIRANTE $= A_{TOT\,MIN}/3 = 802.6/3 = 267.5 \ mm^2$

$\phi_{MIN\ NOCCIOLO} = \sqrt{\frac{4 A_{TOT\,MB}}{\pi}} = \sqrt{\frac{4 \cdot 267.5}{3.14}} = 18.46$ mm

USANDO $\boxed{20 \times 1.5 \ MB}$ 20×1 MC → $\phi_{NOCC} = 18.16$ (258) → $\phi_{NOCC} = 18.773$ O.K. $\boxed{A_{RES} = 272}$ → $A_{res} = 85$

Per il tirante ϕ 18.46 → $A = 267.5$ 277

FORZE MAGN A 42 K

si scala la formula usata per l'INCONEL 18 data dagli AMERICANI:

1402 MN/m^2 a 297 K RAPP. $\frac{1853}{1402} = 1.32$

1853 MN/mm^2 a 20 K.

$A_{TOT\,MIN}$ 20 $= A_{TOT\,MIN}$ 297 K / 1.32 $= 267.5/1.32 = 202.65$

$\phi_{MIN\ NOCC.}$ a 20 K $= \sqrt{\frac{4 \cdot A_{TOT\,MIN\,20}}{\pi}} = \sqrt{\frac{4 \cdot 202.65}{3.14}} = 16.1$

si USA 18×1.5 MB → $\phi_{NOCC} = [illegible]$ O.K.

Tirante nº 2

R_{media} - 195000 kN

$\phi_{fondo\ fil.}$ = 13,42

$S_{resist\ fondo\ filete}$ = 141,447

R = 1386 MPa = 141,2 kg/mm²

ϕ_{media} 14.701

S_{media} 109,74

R = 1155 MPa = 117,71 kg/mm²

TIRANTI

DATI PARTENZA MATERIALE: $\sigma_{0.1020}$

	0.2% P.S. (N/mm²)	Kg/mm²	MAX STRESS (N/mm²)	Kg/mm²
ϕ 19.05	968	98.7	1222	124.6
ϕ 36	938	95.7	1246	127.1

TIRANTI ASSIALI

FORZE MAGN. A 300 K

$F = 25$ TON $\qquad \sigma_{AMM} = \sigma_{ULT}/4 = 124.6/4 = 31.15$ Kg/mm²

$A_{TOT\,MIN} = F/\sigma_{AMM} = 25\,000/31.15 = 802.6$ mm²

$A_{TOT\,MIN}$ PER TIRANTE $= A_{TOT\,MIN}/3 = 802.6/3 = 267.5$ mm²

$\phi_{MIN\,NOCCIOLO} = \sqrt{\frac{4 A_{TOT\,MIN}}{\pi}} = \sqrt{\frac{4 \cdot 267.5}{3.14}} = 18.46$ mm

O.K.

$\phi_{NOCC} = 18.16$ $\qquad \boxed{A_{RES} = 272}$

$\phi_{NOCC} = 18.773$ $\qquad \rightarrow A_{RES} = 285$

Per il tirante ϕ 18.46 $\rightarrow A = 267.5$

FORZE MAGN A 4.2 K

si scala la formula usata per l'INCONEL 18 dato dagli AMERICANI

1402 MN/m² a 297 K $\qquad$ RAPP. $\frac{1853}{1402} = 1.32$

1853 MN/mm² a 20 K

$A_{TOT\,MIN}\,20 = A_{TOT\,MIN}\,297\,K / 1.32 = 267.5/1.32 = 202.65$

$\phi_{MIN\,NOCC}$ a 20 K $= \sqrt{\frac{4 \cdot A_{TOT\,MIN}\,20}{\pi}} = \sqrt{\frac{4 \cdot 202.65}{3.14}} = 16.1$

se si USA 18 × 1.5 MB $\rightarrow \phi$

AXIAL TIE RODS

F (KN)	TIE ROD A	TIE ROD B	TIE ROD C	TIE ROD D	TIE ROD E	TIE ROD F	THEORIC
0	0	0	0	0	0	0	0
30	530	505	522	529	521	536	494
60	1066	1019	1059	1068	1043	1074	988
100	1785	1710	1780	1797	1743	1805	1647

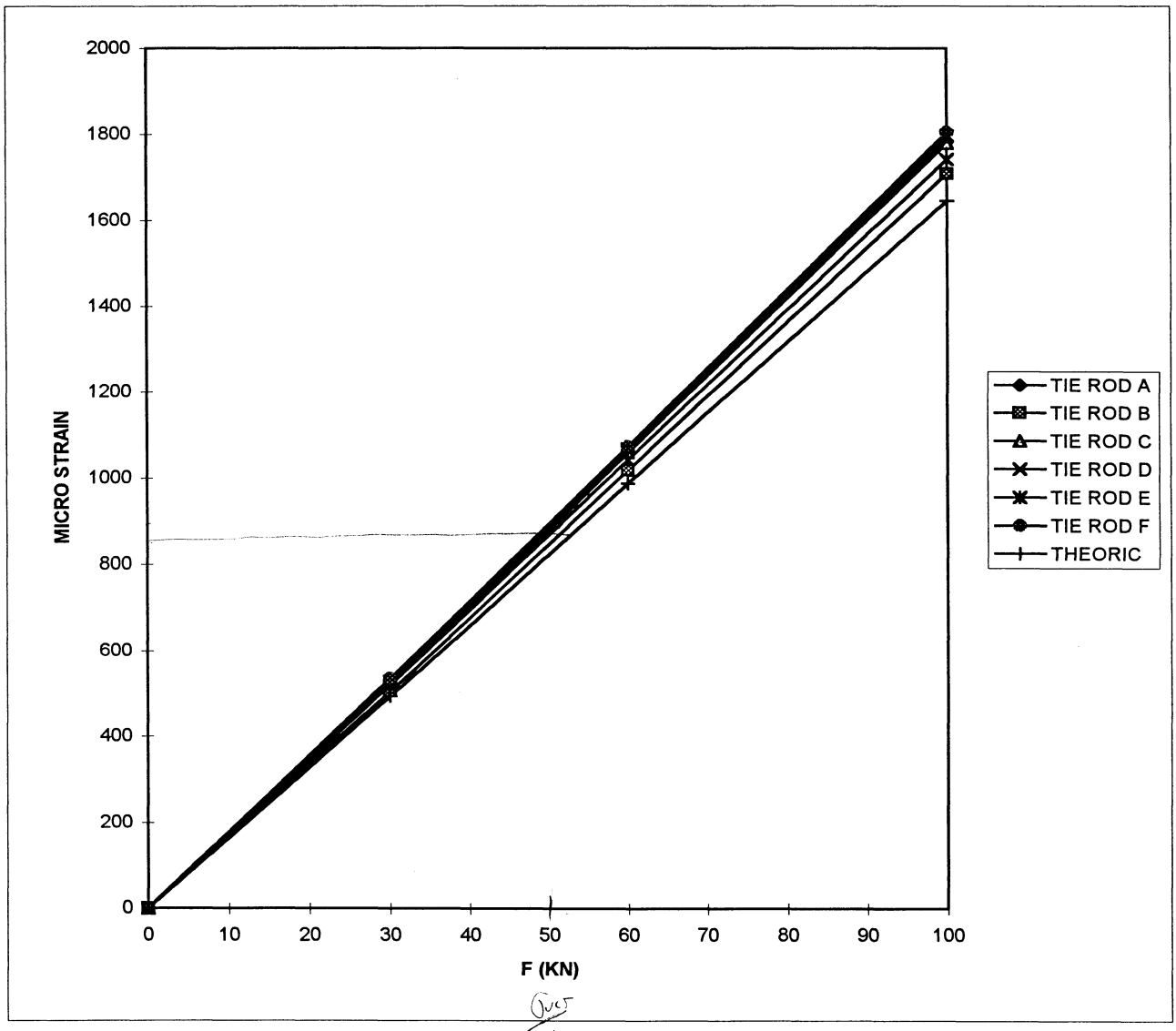

TS17

F	R_{SOL} ⊙	ΔR	R_{SOL} ♀	ΔR
0	350.461	0	350.461	0
20	350.761	0.300	350.856	0.395
40	351.136	0.675	351.195	0.734
61.5	351.530	1.069	351.577	1.116

TIRANTI RADIALI

TS01: $R_0 = 350.223$ $\langle \Delta R \rangle_{20} = 0.374$ $\langle \Delta R \rangle_{40} = 0.740$

$\langle \Delta R \rangle_{61.5} = 1.142$

F	0	20	40	61.5
ε	0	528.7	1046.0	1614
ε_{TEO}	0	465	931	1431

TS02: $R_0 = 350.592$ $\langle \Delta R \rangle_{20} = 0.357$

$\langle \Delta R \rangle_{40} = 0.709$ $\langle \Delta R \rangle_{61.5} = 1.094$

F	0	20	40	61.5
ε	0	504.1	1001.1	1544.8
ε_{TEO}	0	465	931	1431

TS03 $R_0 = 380.611$ $\langle \Delta R \rangle_{20} = 0.352$

$\langle \Delta R \rangle_{40} = 0.714$ $\langle \Delta R \rangle_{61.5} = 1.096$

F	0	20	40	61.5
ε	0	498.4	1008.1	1547.5
ε_{TEO}	0	465	931	1431

TS04 $R_0 = 350.405$ $\langle \Delta R \rangle_{20} = 0.350$

$\langle \Delta R \rangle_{40} = 0.704$ $\langle \Delta R \rangle_{61.5} = 1.090$

F	0	20	40	61.5
ε	0	494.48	994.6	1539.9
ε_{TEO}	0	465	931	1431

TS05 $R_0 = 380.798$ $\langle \Delta R \rangle_{20} = 0.850$

$\langle \Delta R \rangle_{40} = 0.708$ $\langle \Delta R \rangle_{61.5} = 1.095$

F	0	20	40	61.5
ε	0	493.9	999.1	1545.3
ε_{TEO}	0	465	931	1431

TS06 $R_0 = 350.550$ $\langle \Delta R \rangle_{20} = 0.344$

$\langle \Delta R \rangle_{40} = 0.707$ $\langle \Delta R \rangle_{61.5} = 1.094$

F	0	20	40	61.5
ε	0	485.8	988.4	1545.0
ε_{TEO}	0	465	931	1431

TS07 $R_0 = 350.344$ $\langle \Delta R \rangle_{20} = 0.339$

$\langle \Delta R \rangle_{40} = 0.685$ $\langle \Delta R \rangle_{61.5} = 1.062$

F	0	20	40	61.5
ε	0	479.0	967.9	1500.6
ε_{TEO}	0	465	931	1431

TS08 $R_0 = 350.563$ $\langle \Delta R \rangle_{20} = 0.342$

$\langle \Delta R \rangle_{40} = 0.688$ $\langle \Delta R \rangle_{61.5} = 1.062$

F	0	20	40	61.5
ε	0	483.0	971.6	1499.8
ε_{TEO}	0	465	931	1431

TS 11 $R_0 = 350.360$ $\langle \Delta R \rangle_{20} = 0.361$

$\langle \Delta R \rangle_{40} = 0.697$ $\langle \Delta R \rangle_{61.5} = 1.070$

F	0	20	40	61.5
ε	0	510.1	984.8	1511.9
ε_{TEO}	0	465	931	1431

TS12 $R_0 = 350.865$ $\langle \Delta R \rangle_{20} = 0.372$

$\langle \Delta R \rangle_{40} = 0.741$ $\langle \Delta R \rangle_{61.5} = 1.136$

F	0	20	40	61.5
ε	0	524.9	1045.5	1602.8
ε_{TEO}	0	465	931	1431

TS13 $R_0 = 350.761$ $\langle \Delta R \rangle_{20} = 0.345$

$\langle \Delta R \rangle_{40} = 0.687$ $\langle \Delta R \rangle_{61.5} = 1.060$

F	0	20	40	61.5
ε	0	486.9	969.6	1496.0
ε_{TEO}	0	465	931	1431

TS14 $R_0 = 350.508$ $\langle \Delta R \rangle_{20} = 0.334$

$\langle \Delta R \rangle_{40} = 0.686$ $\langle \Delta R \rangle_{61.5} = 1.073$

F	0	20	40	61.5
ε	0	471.7	968.9	1515.5
ε_{TEO}	0	465	931	1431

TS15 $R_0 = 350.876$ $\langle \Delta R \rangle_{20} = 0.352$

$\langle \Delta R \rangle_{40} = 0.707$ $\langle \Delta R \rangle_{61.5} = 1.098$

F	0	20	40	61.5
ε	0	496.6	990.4	1549.2
ε_{TEO}	0	465	931	1431

TS16 $R_0 = 350.675$ $\langle \Delta R \rangle_{20} = 0.320$

$\langle \Delta R \rangle_{40} = 0.684$ $\langle \Delta R \rangle_{61.5} = 1.021$

F	0	20	40	61.5
ε	0	451.7	923.2	1441.4
ε_{TEO}	0	465	931	1431

TS17 $R_0 = 350.461$ $\langle \Delta R \rangle_{20} = 0.348$

$\langle \Delta R \rangle_{40} = 0.705$ $\langle \Delta R \rangle_{61.5} = 1.096$

F	0	20	40	61.5
$\mathcal{E}$	0	491.6	995.9	1548.2
$\mathcal{E}_{TEO}$	0	465	931	1431

TS18 $R_0 = 350.765$ $\langle \Delta R \rangle_{20} = 0.347$

$\langle \Delta R \rangle_{40} = 0.683$ $\langle \Delta R \rangle_{61.5} = 1.072$

F	0	20	40	61.5
$\mathcal{E}$	0	483.8	978.1	1513.0
$\mathcal{E}_{TEO}$	0	465	931	1431

TIRANTI RADIALI

PROVE STRAIN

1 KN = 102 kg = 0,102 T

20 KN

40 KN

61,5 KN

1 T = $\frac{1}{0,102}$ KN

HP 3456 A

CRUO 450.356

TIRANTE TS18

F(KN)	R	R	SCARICA
	350.760	350.766	350.765
20	351.090	351.011	351.035
40	351.470	351.308	351.328
61,5	351.?	351.680	351.650

Pos 1

RICARICA F = 40 KN R = 351.284

ROTAZIONE 180°

Pos 3

F	R	SCARICA
0	350.766	350.765
20	351.097	351.099
40	351.410	351.414
61,5		

TORNATI INDIETRO DI 90°

0	0	0

POS 2

F	R	SCARICA	RICARICA
0	350.764	350.765	350.765
20	351.118	351.118	351.138
40	351.464	351.464	351.515
61.5	351.840	351.840	351.911

RICARICA A 20 KN
351.138

SCARICATO A ~ 20 KN

TORNATI A 0

RICARICA			
		0	350.765
20	351.131	20	351.130
40	351.506	40	351.504
61.5	351.904	61.5	351.902

RIPORTATO NELLE CONDIZIONI INIZ.

POS 1

0	0	0

0	350.765
20	351.031
40	351.334
61.5	351.660

RUOTATO 90°

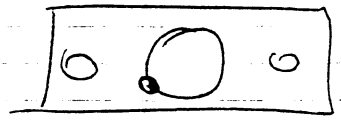

POS 2

		SCARICATO ~ 10 kN
		RICARICA
0	350.765	
20	351.112	380.113
40	351.450	380.449
61.5	351.821	351.820

RUOTATO 90°

POS. 3

0	350.765
20	351.189
40	351.473
61.5	351.849

RUOTATO 90°

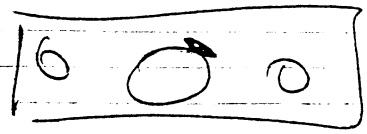

POS.4

		RICARICA (SCARICATO 1 kN)
0	350.764	
20	351.110	
40	351.465	351.468
61.5	351.852	351.857

ASSIALE

TIRANTE

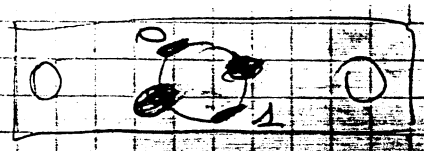

F (kN)	SG 0		SG 1	
0	40	350.638	41	350.428
5	65	350.703	56	350.484
10	22	350.760	128	350.556
15	188	350.826	186	350.645
20	263	350.901	236	350.664
[illegible]	409	351.047	340	350.768
40	352	351.190	459	350.877
50	693	351.331	563	350.991
60	833	351.471	676	351.104
70		351.612		351.220
[illegible]		351.749		351.334
90		351.887		351.450
100		352.026		351.568

NUOVA

30	351.005	350.810
60	351.415	351.162

RUOTATO 180°

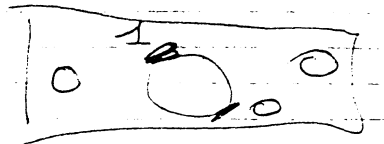

0	Δ0	350.643	Δ1	350.428
30	497	351.146		350.660 232
60	911	351.554		351.013 585
90				

VOLTMETRO: HP-3456A

<30> = 903

<60> = 1283.5

CRIO 450.356

0 FRONT
1 REAR

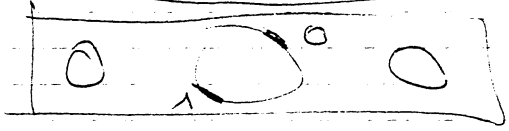

RUOTATO 90°

0		350.042		350.430
30	394	351.036	345	350.775
60	799	351.441	699	351.129

<30> = 905.5 369.5

<60> = 1285

DI NUOVO 80

0	350,642		380.430
30	414 351.056	328	380.758
60	831 351.473	670	351.100

<ΔR, 30> = 371

<ΔR, 60> = 450,5

<30> = 907

<60> = 1286,5

INVERTITE LE VETTURE

	1 FRONT	0 REAR
0	350.428	350.643
30	350.758	351.051
60	351.101	351.470

MATTINATA

	ΔR_0	ΔR_1	
0,0	264	500	<3827
60	672	856	<764>

TS07 : $\delta_{20} = 0.096$ $\langle \Delta R \rangle_{20} = 0.339$ $p = 28\%$

TS08 : $\delta_{20} = 0.036$ $\langle \Delta R \rangle_{20} = 0.342$ $p = 10,5\%$

TS11 : $\delta_{20} = 0.122$ $\langle \Delta R \rangle_{20} = 0.361$ $p = 34\%$

TS12 : $\delta = 0.058$ $\langle \Delta R \rangle = 0.372$ $p = 15,6\%$

TS13 : $\delta = 0.108$ $\langle \Delta R \rangle = 0.345$ $p = 31\%$

TS14 : $\delta = 0.041$ $\langle \Delta R \rangle = 0.334$ $p = 12\%$

TS15 : $\delta = 0.093$ $\langle \Delta R \rangle = 0.352$ $p = 26\%$

TS16 : $\delta = 0.108$ $\langle \Delta R \rangle = 0.320$ $p = 34\%$

TS17 : $\delta = 0.095$ $\langle \Delta R \rangle = 0.348$ $p = 27\%$

~~TS18 : $\delta =$ $\langle \Delta R \rangle = 0.347$ $p =$~~

$$p = \frac{\delta}{\Delta R}$$

$\boxed{F = 20 \text{ KN}}$

$p_{MAX} = 37\%$ $p_{MIN} = 10,5\%$

~~TS07 → TS17 $\langle \Delta R \rangle$ =~~ $\langle p \rangle = 25\%$

$F = 61.5$ KN

TS07 ; $\langle \Delta R \rangle = 1.062$ $\delta = 0.078$ → $p = 7\%$

TS08 : $\langle \Delta R \rangle = 1.062$ $\delta = 0.085$ → $p = 8\%$

TS11 : $\langle \Delta R \rangle = 1.070$ $\delta = 0.120$ → $p = 11\%$

TS12 : $\langle \Delta R \rangle = 1.136$ $\delta = 0.029$ → $p = 2,6\%$

TS13 : $\langle \Delta R \rangle = 1.060$ $\delta = 0.091$ → $p = 8,5\%$

TS14 ; $\langle \Delta R \rangle = 1.073$ $\delta = 0.022$ → $p = 2\%$

TS15 ; $\langle \Delta R \rangle = 1.098$ $\delta = 0.036$ → $p = 3\%$

TS16 ; $\langle \Delta R \rangle = 1.021$ $\delta = 0.054$ → $p = 5\%$

TS17 ; $\langle \Delta R \rangle = 1.096$ $\delta = 0.047$ → $p = 4\%$

$\boxed{F = 61.5 \text{ KN}}$ $p_{MAX} = 25\%$ (TS02)

$p_{MIN} = 0.5\%$ (TS05)

$\langle p \rangle = 6.6\%$

ZAMBETTI E LUMINA

Zambetti & Lumina	SISTEMA QUALITA' *QUALITY SYSTEM* DOCUMENTAZIONE DI CO LLAUDO *DATA BOOK*	DATA 30/06/97 *Date* COMM. 7033 *job* FOGLIO 1 DI 1 *Sheet* *of*

CLIENTE : ANSALDO ENERGIA S.p.A.
Customer

COMMESSA : F10004EM
Job

ORDINE N° : BC 192126 Del 11/03/97
Order n°

DENOMINAZIONE : CAMINO CRIOGENICO
Denomination

SEZIONE *Section*	DESCRIZIONE *Description*	PAGINA N° *Page n°*
A	PIANO CONTROLLO QUALITA' *Quality control plan*	001 ÷ 003
B	ATTESTATI DI CONFORMITA' *Manufactoring inspection standard*	004 ÷ 009
C	CERTIFICATI MATERIALI *Material certificates*	010 ÷ 022
D	SPECIFICHE DI SALDATURA E SALDATORI QUALIFICATI *Welding procedures and qualified welding operatives*	023 ÷ 030
E	CERTIFICATI CND *NDT reports*	031 ÷ 033
F	CERTIFICATI PROVE DI TENUTA *Pressure test report*	034

Enti collaudatori *Inspect. officials*	Ispettore cliente *Customer inspect.*	Capo collaudo *Inspect. Director*
		Zambetti & Lumina s.r.l. Cont. Qualità II° Livello SNT-TC-1A Walter Spelgatti

Zambetti
& Lumina

SEZIONE

SECTION

A

Zambetti & Lumina	SISTEMA QUALITA' *QUALITY SYSTEM*	PCQ N° 09/97 *Qcp N°*
	PIANO CONTROLLO QUALITA' **QUALITY CONTROL PLAN**	COMM. 7033 *Job*
		DATA 21/04/97 *Date*

CLENTE *Customer* ANSALDO ENERGIA S.p.A.	ORDINE *Order* BC 192126 Del 11/03/97	COMM. CLIENTE *Customer's job* F10004EM	
OGGETTO *Subject* CAMINO CRIOGENICO	UNITA' *Unit* \	QUANTITA' *Quantity* 1	FOGLIO DI *Sheet of* 1 3

DOCUMENTI DI RIFERIMENTO
Reference documents

1- SPECIFICA ANSALDO N° 700RM07442 Rev.0

ENTI ISPETTIVI
Inspections bodies

A - Z & L C -

B - ANSALDO D -

APPROVAZIONE CLIENTE
Customer approval

LEGENDA
Legend

H = FASE VINCOLANTE
Hold point

N = FASE DA SEGNALARE
Notofication point

R = ESAME DEL CERTIFICATO
Test report rewiev

1 = ATTESTATO DI CONFORMITA'
Certificate of compliance

2 = CERTIFICATO DI ORIGINE
Origin certificate

3 = CERTIFICATO PROVA E/O COLLAUDO
Test / testing certificate

4 =

5 =

Rev. *Rev.*	Data *Date*	Descrizione *Description*	Preparato *Prepared*	Verificato *Checked*	Approvato *Approved*
0	21-04- 97	PRIMA EMISSIONE			

MODULO - MD023 FG.1 Rev.00

Zambetti & Lumina	PIANO DI CONTROLLO QUALITA' QUALITY CONTROL PLAN	CLIENTE *Customer* ANSALDO ENERGIA	OGGETTO *Subject* CAMINO CRIOGENIC	PCQ N° *Qcp N° 09/97* FOGLIO DI *Sheet 2 OF 3*	COMM. *Job* 7033 DATA *Date* 21/04/97

Fase *Item*	Fase di lavoro da ispezionare *Inspection stage*	Norme applicabili *Applicable standard*	Criterio di Accettazione *Acceptance standard*	Tipo Certif. *Certif. type*	Ente e tipo di controllo *Inspection and type test* A	B	C	D	Luogo di ispezione *Inspection location*	Data prevista di ispezione *Espected inspection date*	Data effettiva di ispezione *Actual inpection date*	N° certificato di prova *Test certificate number*	Note *Comments*
1.0	CONTROLLO CERTIFICAZIONE D'ORIGINE DEI MATERIALI	ASTM A240	ASTM A240 TYPE 304	2	R	R			Stab. Z&L *Z&L Shop*		06-05-97	VEDI SEZIONE C	
2.0	CONTROLLO QUALIFICHE DI SALDATURA E SALDATORI (WPS/PQR/WPQ)	ASME IX	ASME IX	3	H	R			Stab. Z&L *Z&L Shop*		24-04-97	VEDI SEZIONE D	
3.0	CONTROLLI IN FABBRICAZIONE												
3.1	CONTROLLO ASSIEMAGGIO DEI PARTICOLARI PRIMA DELLA SALDATURA	DISEGNI APPLICABILI	DISEGNI APPLICABILI		H				Stab. Z&L *Z&L Shop*		14-05-97	/	
3.2	CONTROLLO DIMENSIONALE DOPO SALDATURA	DISEGNI APPLICABILI	DISEGNI APPLICABILI	3	H				Stab. Z&L *Z&L Shop*		03-06-97	VEDI SEZIONE B	
3.3	CONTROLLI RX AL 100% DELLE SALDATURE TESTA-TESTA DELL' INVOLUCRO A DIS.620RM07428	ASME V Art.2	ASME VIII	3	H	R			Stab. Z&L *Z&L Shop*		18-06-97	VEDI SEZIONE E	
3.4	CONTROLLO LP AL 100% DELLE SALDATURE A TENUTA	ASME V Art.6	ASME VIII	3	H	N			Stab. Z&L *Z&L Shop*		18-06-97	" "	
3.5	CONTROLLO VISIVO AL 100% DI TUTTE LE SALDATURE	ASME V Art.9	ASME VIII	3	H	N			Stab. Z&L *Z&L Shop*		18-06-97	VEDI SEZIONE B	
3.6	CONTROLLO DIMENSIONALE FINALE DOPO LAVORAZIONI MECCANICHE	DISEGNI APPLICABILI	DISEGNI APPLICABILI	3	H				Stab. Z&L *Z&L Shop*		25-06-97	" "	
3.7	PROVA DI TENUTA A VUOTO	700RM07442 P.to 6	700RM07442 P.to 6	3	H	H			Stab. Z&L *Z&L Shop*		26-06-97	VEDI SEZIONE F	

A	Timbro e firma *Stamp and signature*	B	Timbro e firma *Stamp and signature*	C	Timbro e firma *Stamp and signature*	D	Timbro e firma *Stamp and signature*	Revisione *Revision*	
	Zambetti & Lumina s.r.l. Cont. Qualità II° Livello SNT-TC-IA Walter Spelgatti							0	21/04/97
								1	
								2	
								3	
								4	

MODULO - MD023 FG.2 Rev.00

002

Zambetti & Lumina	PIANO DI CONTROLLO QUALITA' QUALITY CONTROL PLAN	CLIENTE *Customer* ANSALDO ENERGIA	OGGETTO *Subject* CAMINO CRIOGENIC	PCQ N° *Qcp N° 09/97* FOGLIO DI *Sheet 3 OF 3*	COMM. *Job* 7033 DATA *Date* 21/04/97

Fase *Item*	Fase di lavoro da ispezionare Inspection stage	Norme applicabili *Applicable standard*	Criterio di Accettazione *Acceptance standard*	Tipo Certif. *Certif. type*	Ente e tipo di controllo *Inspection and type test* A	B	C	D	Luogo di ispezione *Inspection location*	Data prevista di ispezione *Espected inspection date*	Data effettiva di ispezione *Actual inpection date*	N° certificato di prova *Test certificate number*	Note *Comments*
3.8	CONTROLLO VISIVO DIMENSIONALE DEL CAMINO E DELLO SCHERMO PREMONTATI	DISEGNI APPLICABILI	DISEGNI APPLICABILI	3	H	H			Stab. Z&L *Z&L Shop*		02-07-97	VEDI SEZIONE B	
4.0	CONTROLLO DOCUMENTAZIONE FINALE	COME DA PCQ	COME DA PCQ		H	H			Stab. Z&L *Z&L Shop*		02-07-97	—	

A	Timbro e firma *Stamp and signature*	B	Timbro e firma *Stamp and signature*	C	Timbro e firma *Stamp and signature*	D	Timbro e firma *Stamp and signature*		Revisione *Revision*	
	Zambetti & Lumina s.r.l. Cont. Qualità II° Livello SNT-TC-IA *Walter Spelgatti*								0	21/04/97
									1	
									2	
									3	
									4	

MODULO - MD023 FG.2 Rev.00

003

Zambetti
& Lumina

SEZIONE

SECTION

B

Zambetti & Lumina	SISTEMA QUALITA' *QUALITY SYSTEM* ATTESTATO DI CONFORMITA' *Certificate of compliance*	ATC N° 087/97 A COMM. *job* 7033 DATA *Date* 03-06-97

CLIENTE *Customer* ANSALDO ENERGIA S.P.A.	ORDINE *Order* BC132126 DEL 11-03-97	COMM. CLIENTE *Customer's job* F1000 4EM
OGGETTO *Subject*		FOGLIO *Sheet* 1 DI *of* 1

RIFERIMENTO ORDINE *Order reference* POS. *Item*	DISEGNO *Drawing*	DENOMINAZIONE *Item description*	Quantita' *Quantity*	Documentazione rilasciata *Delivered documentation*
1	620RM07428	SCATOLA VALVOLE	1	
	620RM07431	FLANGIA INFERIORE	1	
	620RM07432	SERBATOIO	1	

SI CERTIFICA CHE I PARTICOLARI SOPRACITATI SONO STATI COSTRUITI IN CONFORMITA' AI DISEGNI E ALLE SPECIFICHE RICHIAMATE IN ORDINE

WE CERTIFY THAT THE ABOVEMENTIONED PARTS HAVE BEEN BUILD AND TESTED IN CONFORMITY WITH SPECIFICATIONS AND DRAWINGS AS PER ORDER

Note
Remarks

1- CONTROLLO DIMENSIONALE, DOPO SALDATURA, CON ESITO POSITIVO

2- RIF. NS. PCQ N° 09/97 FASE 3.2

Operatore *Operator*	Enti Collaudatori *Inspect. officials*	Ispettore cliente *Customer inspect.*	Capo collaudo *Inspect. Dept.manager*
			Zambetti & Lumina s.r.l Cont. Qualità II° Livello SNQ TC-IA Walter Spelgatti

MODULO - MD002 Rev.00

Zambetti & Lumina	SISTEMA QUALITA' *QUALITY SYSTEM* ATTESTATO DI CONFORMITA' *Certificate of compliance*	ATC N° 092/97 COMM. *job* 7033 DATA *Date* 18-06-97

CLIENTE *Customer*	ORDINE *Order*	COMM. CLIENTE *Customer's job*
ANSALDO ENERGIA S.P.A.	BC 132126 DEL 11-03-97	F10004EM
OGGETTO *Subject*		FOGLIO *Sheet* 1 DI *of* 1

RIFERIMENTO ORDINE *Order reference* POS. *Item*	DISEGNO *Drawing*	DENOMINAZIONE *Item description*	Quantita' *Quantity*	Documentazione rilasciata *Delivered documentation*
1	620RM07428	SCATOLA VALVOLE	1	
	620RM07431	FLANGIA INFERIORE	1	
	620RM07432	SERBATOIO	1	

SI CERTIFICA CHE I PARTICOLARI SOPRACITATI SONO STATI COSTRUITI IN CONFORMITA' AI DISEGNI E ALLE SPECIFICHE RICHIAMATE IN ORDINE

WE CERTIFY THAT THE ABOVEMENTIONED PARTS HAVE BEEN BUILD AND TESTED IN CONFORMITY WITH SPECIFICATIONS AND DRAWINGS AS PER ORDER

Note
Remarks

1- CONTROLLO VISIVO AL 100% DI TUTTE LE SALDATURE, CON ESITO POSITIVO

2- RIF. NS. PCQ N° 09/97 FASE 3.5

Operatore *Operator*	Enti Collaudatori *Inspect. officials*	Ispettore cliente *Customer inspect.*	Capo collaudo *Inspect. Department*
			Zambetti & Lumina s.r.l. Cont. Qualità II° Livello SNT-TC-IA Walter Speldatti

MODULO - MD002 Rev.00

Zambetti & Lumina	SISTEMA QUALITA' *QUALITY SYSTEM* ATTESTATO DI CONFORMITA' *Certificate of compliance*	ATC N° 093/37 COMM. *job* 7033 DATA *Date* 25-06-97

CLIENTE *Customer* ANSALDO ENERGIA S.P.A.	ORDINE *Order* BC 132126 DEL 11-03-97	COMM. CLIENTE *Customer's job* F10004EM
OGGETTO *Subject*		FOGLIO *Sheet* 1 DI *of* 1

RIFERIMENTO ORDINE *Order reference* POS. *Item*	DISEGNO *Drawing*	DENOMINAZIONE *Item description*	Quantita' *Quantity*	Documentazione rilasciata *Delivered documentation*
1	VEDI S.T.	PARTICOLARI VARI	1	
	700RM07442	PER CAMINO CRIOGENICO		

SI CERTIFICA CHE I PARTICOLARI SOPRACITATI SONO STATI COSTRUITI IN CONFORMITA' AI DISEGNI E ALLE SPECIFICHE RICHIAMATE IN ORDINE

WE CERTIFY THAT THE ABOVEMENTIONED PARTS HAVE BEEN BUILD AND TESTED IN CONFORMITY WITH SPECIFICATIONS AND DRAWINGS AS PER ORDER

Note
Remarks

1- CONTROLLO DIMENSIONALE FINALE, DOPO LAVORAZIONE MECCANICA, CON ESITO POSITIVO

2- RIF. NS. PCQ N°09/97 FASE 3.6

Operatore *Operator*	Enti Collaudatori *Inspect. officials*	Ispettore cliente *Customer inspect.*	Capo collaudo *Inspect. Dept. manager*
			Zambetti & Lumina s.r.l. Cont. Qualità II° Livello SNT-TC-IA Walter Spelgatti

MODULO - MD002 Rev.00

Zambetti & Lumina	SISTEMA QUALITA' *QUALITY SYSTEM* ATTESTATO DI CONFORMITA' *Certificate of compliance*	ATC N° 096/97 COMM. *job* 7033 DATA *Date* 02-07-97

CLIENTE *Customer* ANSALDO ENERGIA S.P.A.	ORDINE *Order* BC 192126 DEL 11-03-97	COMM. CLIENTE *Customer's job* F 10004 EM
OGGETTO *Subject*		FOGLIO *Sheet* 1 DI *of* 1

RIFERIMENTO ORDINE *Order reference* POS. *Item*	DISEGNO *Drawing*	DENOMINAZIONE *Item description*	Quantita' *Quantity*	Documentazione rilasciata *Delivered documentation*
1	VEDI S.T.	ASSIEME CAMINO	1	
	700RM07442			

SI CERTIFICA CHE I PARTICOLARI SOPRACITATI SONO STATI COSTRUITI IN CONFORMITA' AI DISEGNI E ALLE SPECIFICHE RICHIAMATE IN ORDINE

WE CERTIFY THAT THE ABOVEMENTIONED PARTS HAVE BEEN BUILD AND TESTED IN CONFORMITY WITH SPECIFICATIONS AND DRAWINGS AS PER ORDER

Note
Remarks

1- CONTROLLO VISIVO E DIMENSIONALE DEL CAMINO E DELLO SCHERMO PREMONTATI, CON ESITO POSITIVO

2- RIF. NS. PCQ N° 09/97 FASE 3.8

Operatore *Operator*	Enti Collaudatori *Inspect. officials*	Ispettore cliente *Customer inspect.*	Capo collaudo *Inspect. Dept manager*
			Zambetti & Lumina s.r.l. Cont. Qualità II° Livello SNT-TC-IA Walter Spelgatti

MODULO - MD002 Rev.00

CARBONE LORRAINE GRUPPO PECHINEY

IL CARBONIO

Viale Lucania, 6
I-20139 MILANO, ITALIA
Tel. (39) (2) 57 49 31
Fax (39) (2) 57 30 21 03
Telex 320553 CARBO-I

DIVISIONE CHIMICO-MECCANICA

Pratica seguita da: SIG.RA A. FERRARI
Tel. interno: 02/57493.1
Ns/rif.: SMA/MC/AF-N. 1124/L
Vs/rif.:

SPETT.LE
ZAMBETTI E LUMINA SRL
LOC. PERGEGALLI
24060 - ENDINE GAIANAO (BG)

C.A. VS. SIG. GUIZZETTI

Milano, 30.05.1997

Oggetto: **CERTIFICATO DI CONFORMITA'**

In allegato Vi preghiamo di voler trovare il certificato di conformità del materiale relativo al Vs. ordine N. 281/97 del 16.05.97.

Con l'occasione, porgiamo i ns. più distinti saluti.

IL CARBONIO S.P.A.
mc

1 All./

008

Groupe CARBONE LORRAINE

CEFILAC
Z.I. de Survaure
F-42607 MONTBRISON

N° PV/*PV nr* : 205645/21/97/000

CERTIFICAT DE CONFORMITE MATIERE ET DIMENSIONNELLE
CERTIFICATE OF MATERIAL AND DIMENSIONAL COMPLIANCE
(Type 2.1 selon NF EN 10204)

Nous soussignés CEFILAC, certifions que les joints objet de la commande :
CEFILAC certify that the seals of this purchase order :

Client/*Customer* : IL CARBONIO SPA

Adresse/*Address* : 20139 MILANO ITALIE

N° commande/*Order nr.* : P0918 **du**/*of* 19/05/97

Références articles client :
Customer article reference

N° Client : *8945* **N° A.R.** : 205645 **Postes n°** : *01*
Customer nr *Ack. nr* *Item nr.*

ont été exécutés en :
were manufactured in :
INOX + COUPELLE JOINT ALU

et sont conformes aux dimensions demandées
and are in compliance with the required dimensions

et aux prescriptions de la commande.
and with the specifications of the order.

LOT: 61391/1/3

Date : 21/05/97

Nom/*Name* : P.PERRIER

Visa :

LCL MTB

Zambetti
& Lumina

SEZIONE

SECTION

C

Zambetti & Lumina	SISTEMA QUALITA' *QUALITY SYSTEM* ELENCO CERTIFICATI DI ORIGINE *Origin certificates list*	ACM N° 44/97 COMM. *job* 7033 DATA *Date* 06-05-97

CLIENTE *Customer* ANSALDO ENERGIA S.P.A.	ORDINE *Order* BC 192126 DEL 11-3-97	COMM. CLIENTE *Customer's job* F 10004EM
OGGETTO *Subject* ASSIEME CAMINO CRIOGENICO	DISEGNO *Drawing* VARI	FOGLIO *Sheet* 1 DI *of* 1

CERTIFICATO N° *Certificate n°*	FORNITORE *Supplier*	MATERIALE *Material*	PROFILO *Profile*	DIMENSIONI *Dimension*
47400/385/07	ALZ	AISI 304	LAMIERA	SP. 10
64617/201/43	"	"	"	"
232348	ACERINOX	"	"	SP. 25
232282	"	"	"	SP. 30
96/02631	DMV STAINLESS	"	TUBO	ϕ 42,4 x 2
14195	" "	"	"	ϕ 141,3 x 3,4
30413/54	SANDVIK	"	"	ϕ 159 x 4,5
9652861	DMV STAINLESS	"	"	ϕ 219,1 x 8,18
/	METALMA	RAME	LAMIERA	SP. 1-2
1235	SILMET	"	TUBO	ϕ 18 x 1

Note
Remarks

Enti Collaudatori *Inspect. Officials*	Ispettore cliente *Customer inspect.*	Capo collaudo *Inspect. Manager*
		Zambetti & Lumina s.r.l. Cont. Qualità II° Livello SNT-TC-IA Walter Spelgatti

MODULO - MD073 Rev.00

ALZ nasmloze vennootschap
Maatschappelijke zetel
Genk-Zuid : Zone 6A, B 3600 Genk
Tel. (089) 30 21 11 - Telefax (089) 30 23 80
Telex 39058 aldorg b
H.R. Tongeren nr 41.051 B.T.W. nr BE 401 277.914

Der TÜV Rheinland hat mit Schreiben vom 21. März 1972 auf die Gegenzeichnung verzichtet

SURVEYOR'S MARK
CACHET DE L'EXPERT
STEMPEL DES WERKSSACHVERSTÄNDIGEN

Certificat de Réception C.C.P.U. Nr
Abnahmeprüfzeugnis B
nach DIN 50049/3.1.B - NFA 00001/3.1.B - EN 10204/3.1.B

Approved as supplier according to AD/WO - TRD 100 statement W E 003
Überprüfung als Hersteller nach AD/WO - TRD 100 Blatt W E 003

PROD.PROCES: Electric Arc Furnace - VOD - Continuous Casting.
PROC. FABRIC.: Four à Arc - VOD - Coulée Continue.
FERTIGUNGSABL.: Elektro-Lichtbogen Ofen - VOD - Stranggusz.

your order n° - votre n° de cde - Bestell.Nr	our order n° - notre n° de cde - Werksnr
LAC/OIK/FEB97-	47400/385/07

ACIER INOXYDABLE, COILS, LAMINES A CHAUD, RECUITS ET DECAPES

heat n°-n° coulée Schmelze Nr: K650026
coil n°-n° bobine Band Nr: 65002620

Specifications - Spécifications - Vorschriften	Type - Nuance - Quality	Finish	Corrosion test - Corr. inter - Int.krist.Korr.
ASTM A240/A240 M-94A	TYPE 304	NO 1	ASTM A262 E - 93A :OK
ASME SA 240-95 ADD.95	TYPE 304	NO 1	
AFNOR NFA 36209-05/90	Z7 CN 18-09	LAC	AFNOR NFA 05-159 T1 :OK

dimensions - Abmessungen
mm 10.00 1500.00 0.0

Material (Code Designation) Matière Werkstoff (Nummer)

Quenching Hypertrempe Abschreckung ASTM A240 1050°c forced air air poussé forcierter Luft

Particular requirem - Prescr particul - Sondervorschriften :
MATERIAL MERCURY FREE

CHEMICAL ANALYSIS
COMPOSITION CHIMIQUE
CHEMISCHE ZUSAMMENSETZUNG

ELEMENTS	LADLE ACIERIE SCHMELZE	PRODUCT PRODUIT STUCKANAL.
C	0.050	0.050
Mn	1.32	1.33
P	0.032	0.031
S	0.006	0.005
Si	0.38	0.37
Cr	18.16	18.15
Ni	8.55	8.52
Mo		
Cu		
Ti		
Co		
N	0.026	
α - ferrite		
δ - ferrite		

MECHANICAL PROPERTIES - PROPRIETES MEC. - MECH. WERTE

TENSILE TEST ESSAI DE TRACTION ZUG VERSUCH	ROOM TEMP. - TEMP. AMB. - RAUMTEMP. REQ.-EXIGÉ ANFORDERUNG		OBTAINED - OBTENU - ERGEBNISSE TEST N° - N° TEST - PROBE		TEMP. °C REQ.-EXIGÉ ANFORDER.	OBTAIN.-OBTENU ERGEBNISSE
ASTM A240	N/MM2 min.	max.	65002620 A (T) E		min	
Section-Q Schnitt mm²			12.53X10.10			
yield 0.2% Limite él. Str.grenze 1.0%	205		321	325		
			358	357		
tensile strength rupture Zugfestigkeit	515		610	616		
elong. % A50 elong Br.Dehn. A5	40		57	59		
			57	59		
F 0.2 /R max %			52	52		
hardness dureté Härte HRB		92	86.5	88.5		

grain size astm grain astm Korngrösse 7.0

bend pliage Biegeversuch 180° OK

impact strength test essai de résilience Kerbschlagbiegeversuch °C

TESTS TO VERIFY BATCH AND QUALITY HAVE BEEN CARRIED OUT
TESTS DE VERIFICATION DE LA CONFORMITE DE LA NUANCE FOURNIE
VERWECHSLUNGSPRÜFUNG WURDE DURCHGEFÜHRT OK

VISUAL INSPECTION AND DIMENSIONAL CHECK
EXAMEN VISUEL ET DIMENSIONEL DE SURFACE
BESICHTIGUNGEN UND ABMESSUNGEN EXAMEN VISUEL D'ASPECT DE SURFACE ET DIMENSIONS OK

ZAMBETTI & LUMINASTI ENDINE N.....
Controllo Qualità
COPIA CONFORME ALL'ORIGINALE

QUANTITY / WEIGHT MEMO / QUANTITÉ MÉMO POIDS LIVRÉ
ÜBERSICHT GELIEFERTER GEWICHTE

PACKAGE Nr N° DE CAISSE PAKET NR	QTY. QTÉ. ANZ.	NET WEIGHT POIDS NET NETTO GEW.	PACKAGE Nr N° DE CAISSE PAKET NR	QTY. QTÉ. ANZ.	NET WEIGHT POIDS NET NETTO GEW.
70069095	1	16840			
TOTAL/GESAMT:	QTY. QTÉ. ANZ	1	NET WEIGHT POIDS NET NETTO GEW.		16840

OIKOS S.p.A.

The delivery is in accordance with the order.
La fourniture est conforme aux exigences de la commande.
Die Lieferung entspricht den Bestellbedingungen.

IL PRESENTE CERTIFICATO È VALIDO PER:
CLIENTE .....
ORDINE N° 35 DEL 07.5.97
BOLLA° 6655 DEL 04.6.97
POSIZIONE ..... N° PEZZI 1
VALVOROBICA INDUSTRIALE

ALZ nasmloze-vennootschap
THE SURVEYOR - L'EXPERT - DER WERKSSACHVERSTÄNDIGE

Genk the 29.01.1997
le
den

H. JANSSEN

PACKING LIST 703647 - I - 9701773

ALZ naamloze vennootschap
Maatschappelijke zetel
Genk-Zuid : Zone 6A, B 3600 Genk
Tel. (089) 30 21 11 - Telefax (089) 30 23 80
Telex 39058 aldozg b
H.R. Tongeren nr 41.051 - B.T.W. nr BE 401.277.914

Der TÜV Rheinland hat mit Schreiben vom 21. Märtz 1972 auf die Gegenzeichnung verzichtet

SURVEYOR'S MARK
CACHET DE L'EXPERT
STEMPEL DES WERKSSACHVERSTÄNDIGEN

Certificat de Réception C.C.P.U. Nr
Abnahmeprüfzeugnis B
nach DIN 50049/3.1.B - NFA 00001/3.1.B - EN 10204/3.1.B

Approved as supplier according to AD/WO - TRD 100 statement W E 603
Überprüfung als Hersteller nach AD/WO - TRD 100 Bericht W E 603

PROD.PROCES: Electric Arc Furnace - VOD - Continuous Casting.
PROC. FABRIC.: Four à Arc - VOD - Coulée Continue.
FERTIGUNGSABL.: Elektro-Lichtbogen Ofen - VOD - Strangguss.

your order n° - votre n° de cde - Bestell.Nr	our order n° - notre n° de cde - Werksnr
LOT 483684/96 ALZ4596	64617/201/43

ACIER INOXYDABLE, COILS, LAMINES A CHAUD, RECUITS ET DECAPES

heat n°-n° coulée / Schmelze Nr: K649077

coil n°-n° bobine / Band Nr: 64907748

Specifications - Spécifications - Vorschriften	Type - Nuance - Quality	Finish	Corrosion test - Corr. inter - Int.krist.Korr.
ASTM A240/A240 M-94A	TYPE 304	NO 1	ASTM A262 E - 93A :OK
ASME SA 240-95 ADD.95	TYPE 304	NO 1	
AFNOR NFA 36209-05/90	Z7 CN 18-09	LAC	AFNOR NFA 05-159 T1 :OK

dimensions - Abmessungen
mm 10.00 1500.00 0.0
inches

Material (Code Designation) / Matière / Werkstoff (Normbez.)

Quenching / Hypertrempe / Abschreckung: ASTM A240 1050°C forced air / air poussé / bewegter Luft

P lar requirem. - Prescr. particul. - Sondervorschriften :

CHEMICAL ANALYSIS
COMPOSITION CHIMIQUE
CHEMISCHE ZUSAMMENSETZUNG

ELEMENTS	LADLE ACIERIE SCHMELZE	PRODUCT PRODUIT STUCKANAL.
C	0.051	0.050
Mn	1.27	1.29
P	0.033	0.032
S	0.012	0.012
Si	0.40	0.39
Cr	18.08	18.12
Ni	8.63	8.65
Mo		
Cu		
Ti		
N	0.026	
α - ferrite		
δ - ferrite		

MECHANICAL PROPERTIES - PROPRIETES MEC. - MECH. WERTE

TENSILE TEST ESSAI DE TRACTION ZUG VERSUCH	ROOM TEMP. - TEMP. AMB. - RAUMTEMP. REQ.-EXIGÉ ANFORDERUNG N/MM2 min.	max.	OBTAINED - OBTENU - ERGEBNISSE TEST N° - N° TEST - PROBE 64907748 A (T)	E	TEMP. °C REQ.-EXIGÉ ANFORDER. min.	OBTAIN.-OBTENU ERGEBNISSE
ASTM A240						
Section-Q.Schnitt mm²			12.66X10.12			
yield limite él. Str.grenze 0.2%	205		324	321		
1.0%			362	360		
tensile strength rupture Zugfestigkeit	515		615	613		
elong. % A50 allong. Br.Dehn. A5	40		56	57		
			56	57		
E 0.2 /R max %			52	52		
hardness dureté Härte HRB		92	87.0	86.5		

TRUE COPY
C.S.A.I. s.p.a.
li, ____
VS. ord. Fax pos. ____
Ns. comm. ____ n° lamiera 6307
Inspection Department

grain size astm / grain astm / Korngrösse

bend / pliage / Biegeversuch 180° OK

impact strength test / essai de résilience / Kerbschlagbiegeversuch °C

TESTS TO VERIFY BATCH AND QUALITY HAVE BEEN CARRIED OUT
TESTS DE VERIFICATION DE LA CONFORMITE DE LA NUANCE FOURNIE
VERWECHSLUNGSPRÜFUNG WURDE DURCHGEFÜHRT
OK

VISUAL INSPECTION AND DIMENSIONAL CHECK
EXAMEN VISUEL ET DIMENSIONEL DE SURFACE
BESICHTIGUNGEN UND ABMESSUNGEN
EXAMEN VISUEL D'ASPECT DE SURFACE ET DIMENSIONS OK

QUANTITY / WEIGHT MEMO / QUANTITÉ MÉMO POIDS LIVRÉ
ÜBERSICHT GELIEFERTER GEWICHTE

PACKAGE Nr N° DE CAISSE PAKET NR	QTY. QTÉ. ANZ.	NET WEIGHT POIDS NET NETTO GEW.	PACKAGE Nr N° DE CAISSE PAKET NR	QTY. QTÉ. ANZ.	NET WEIGHT POIDS NET NETTO GEW.
70068857	1	17880			
TOTAL/GESAMT:	QTY. QTÉ. ANZ. 1		NET WEIGHT POIDS NET NETTO GEW.	17880	

CSA I 409-97 b

The delivery is in accordance with the order.
La fourniture est conforme aux exigences de la commande.
Die Lieferung entspricht den Bestellbedingungen.

NICHELCROM S.P.A.
VIA TRENTO, 96
20099 SESTO S. GIOVANNI
ITALIE

ZAMBETTI & LUMINA S.r.l. ENDINE GAJANO (BG) N. ..... Controllo Qualità

ALZ naamloze vennootschap
THE SURVEYOR - L'EXPERT - DER WERKSSACHVERSTÄNDIGE

Genk the le den 23.01.1997

012

PACKING LIST 703029 - I - 9701468

362

CERINOX, S.A.
FABRICA DEL CAMPO
GIBRALTAR
PALMONES (LOS BARRIOS)
TEL. (34) - 56 - 62 93 00
FAX (34) - 56 - 62 93 01
P.O. BOX. 83
11370 LOS BARRIOS (CADIZ)

INSPECTION CERTIFICATE

CERTIFICADO DE INSPECCION 3.1.B

ACCORDING TO / SEGUN: EN 10204

CERTIFICATE No / CERTIFICADO NR: 232348 1 / 1

CUSTOMER / CLIENTE:
C.S.A.I. SPA
VIA FOSSE ARDEATINE, 69
20099 S.S.GIOVANNI MILANO ITALIA

Our order no. / N/PEDIDO: AE32561

Your order no. / S/PEDIDO: 005927/96

REQUIREMENTS / NORMAS APLICABLES: ASTM-A-240/93;A-480/93;ASME-SA-240/95 + Add95

GRADE / MATERIAL: Acx 160, TP-304

FINISH / ACABADO: Nro.1

TRADE MARK / SELLO DEL FABRICANTE

INSPECTOR'S STAMP / SELLO DEL INSPECTOR

STEELMAKING PROCESS / PROCESO DE ACERIA: A.O.D.

COIL / BOX BOBINA/CAJA	CONTENT CONTENIDO	DIMENSIONES THICKNESS ESPESOR	WIDTH ANCHO	LENGTH LARGO	MARKS MARCA	QUANTITY Nº PIEZAS	PROBETA	
4061	02PR91 ACA	25,00	1.500,00	6.000,00	40	1	02PR91 AC	C
4061	02PR91 ACB	25,00	1.500,00	6.000,00	40	1	02PR91 AC	C

CHEMICAL ANALYSIS — COMPOSICION QUIMICA (%)

HEAT NO. COLADA	C	CR	MN	N	NI	P	S	SI
REQUIREMENTS REQUISITOS	0,080	18,000 20,000	2,000	0,100	8,500 10,500	0,045	0,030	0,750
91	0.049	18,318	1,632	0,050	8,596	0,024	0,008	0,318

MECHANICAL PROPERTIES — CARACTERISTICAS MECANICAS

COIL PROBETA	PROBE	Rm. N/MM2	Rp 0.2 N/MM2	HRB	A200 %
REQUIREMENTS REQUISITOS	ST	515,00 700,00	205,00	92,00	40,00
PR91 AC	CT	591,9	278,0	89,0	54,4

TRUE COPY
C.S.A.I. s.p.a.
li, ...
VS. ord. Fax pos. .....
Ns. comm. ..... n° Istmiera 3622
Inspection Department

INTERGRANULAR CORROSION / CORROSION INTERGRANULAR: ASTM-A-262 PRACTICA E

SURFACE AND DIMENSIONAL CONTROL / INSPECCION SUPERFICIAL Y DIMENSIONAL: SATISFACTORY / Satisfactoria

REMARKS / OBSERVACIONES

Temperatura de hipertemple entre 1050 y 1100 º C

ZAMBETTI & LUMINA S.r.l. ENDINE GAIANO (BG) N..... Controllo Qualità

WORK INSPECTOR / INSPECTOR: J.A. Simón

*013

PALMONES, 28 FEBRERO 1997

ACERINOX, S.A.
FABRICA DEL CAMPO
DE GIBRALTAR
PALMONES (LOS BARRIOS)
TFNO. (34) - 56 - 62 93 00
FAX (34) - 56 - 62 93 01
P.O. BOX. 83
11370 LOS BARRIOS (CADIZ)

INSPECTION CERTIFICATE 3.1.B

CERTIFICADO DE INSPECCION

ACCORDING TO / SEGUN: EN 10204

CERTIFICATE No. / CERTIFICADO NR: 232282 3 / 1

CUSTOMER / CLIENTE

C.S.A.I. SPA
VIA FOSSE ARDEATINE, 69
20099 S.S.GIOVANNI MILANO ITALIA

Our order no. / N/PEDIDO: AE32561

Your order no. / S/PEDIDO: 005927/96

REQUIREMENTS / NORMAS APLICABLES
ASTM-A-240/93;A-480/93;ASME-SA-240/95 + Add95

GRADE / MATERIAL: Acx 160 TP-304

FINISH / ACABADO: Nro.1

TRADE MARK / SELLO DEL FABRICANTE

INSPECTOR'S STAMP / SELLO DEL INSPECTOR

STEELMAKING PROCESS / PROCESO DE ACERIA: A.O.D.

COIL / BOX / BOBINA/CAJA	CONTENT / CONTENIDO	DIMENSIONS / DIMENSIONES THICKNESS / ESPESOR	WIDTH / ANCHO	LENGTH / LARGO	MARKS / MARCA	QUANTITY / Nº PIEZAS	PROBETA	
Z3976	04PR91 CA	30,00	1.500,00	6.000,00	30	1	04PR91 C	C
Z3976	04PR91 CB	30,00	1.500,00	6.000,00	30	1	04PR91 C	C
Z8668	04PR91 DA	30,00	1.500,00	6.000,00	31	1	04PR91 D	C
Z8668	04PR91 DB	30,00	1.500,00	6.000,00	31	1	04PR91 D	C

CHEMICAL ANALYSIS — COMPOSICION QUIMICA (%)

HEAT NO. / COLADA	C	CR	MN	N	NI	P	S	SI
REQUIREMENTS / REQUISITOS	0,080	18,000 20,000	2,000	0,100	8,500 10,500	0,045	0,030	0,750
R91	0,049	18,318	1,632	0,050	8,596	0,024	0,008	0,318

MECHANICAL PROPERTIES — CARACTERISTICAS MECANICAS

COIL / PROBETA	MODE	Rm. N/MM2	Rp 0.2 N/MM2	HRB	A200 %
REQUIREMENTS / REQUISITOS	ST	515,00 700,00	205,00	92,00	40,00
4PR91 C	CT	602,0	318,4	90,0	57,8
4PR[illegible] D	CT	597,4	286,7	89,0	62,4

TRUE COPY
C. S. A. I. s.p.a.
li, ...
VS. ord. Fax pos. .....
Ns. comm. ..... nº lamiera 4152
Inspection Department

INTERGRANULAR CORROSION / CORROSION INTERGRANULAR
ASTM-A-262 PRACTICA E

SURFACE AND DIMENSIONAL CONTROL / INSPECCION SUPERFICIAL Y DIMENSIONAL
SATISFACTORY / Satisfactoria

REMARKS / OBSERVACIONES

Temperatura de hipertemple entre 1050 y 1100 º C

ZAMBETTI & LUMINASTI N..... Controllo Qualità ENDINE GAIANO (BG)

WORK INSPECTOR / INSPECTOR

014

J.A. Simón

PALMONES, 28 FEBRERO 1997

D. 65.320.011

CUSTOMER'S ORDER 95/1405

MILL ORDER / ITEM 4711364/004

PRODUCT SEAMLESS STAINLESS STEEL PIPES-COLD DRAWN-ACC. TO ASTM A 312 /ASME SA 312 SEC. II IN TP 304L AND TP 304 - ANNEALED AND PICKLED - PLAIN ENDS -

DIMENSIONS:

Lg. From	Lg. To	O.D. mm	W.T. mm
4000	8000	42,400	2,000

QUANTITY : Nr 36 Mt 239 Kg 490 Ft 784' 1" Lbs 1080,2

TEST N. 59275 HEAT N. 74559

TENSION TEST + 20,0^C
TEST SPEC. : LONGITUDINAL SECTION 37,6 mm2

YIELD POINT 0,2% (MPA):	requir min	205	result	422,9
TENSILE STRENGTH (MPA):	requir min	515	result	643,6
ELONGATION :	CALIBRATED ON 2"	50,8 mm		
(%):	requir.min	35,0	result	42,3

TECNOLOGICAL TESTS PERFORMED WITH SATISFACTORY RESULTS:
FLATTENING TEST

HEAT N. 74559

HEAT ANALYSIS %

C	0,017	Mn	1,93	Si	0,32	P	0,025	S	0,003	Ni	10,35
Cr	18,20										

LEAK-TIGHTNESS TEST PERFORMED WITH SATISFACTORY RESULTS BY:
HYDRAULIC TEST PRESSURE 19,8 MPA

VISUAL AND DIMENSIONAL CONTROL OF THE TUBES HAS BEEN CARRIED OUT WITH SATISFACTORY RESULT

REMARKS:
THE STEEL IS PRODUCED BY ELECTRIC FURNACE

THE TUBES HAVE BEEN SOLUTION TREATED AT 1070°C

ALL TUBES HAVE BEEN SUBJECTED TO P.M.I. (PERMANENT MAGNETIC INSPECTION) WITH SATISFACTORY RESULT.

ZAMBETTI & LUMINASI ENDINE GAMBARA (BG) N..... Controllo Qualità

IL PRESENTE CERTIFICATO E' VALIDO PER:
CUSTOMER FERNNOX
ORDINE N. 12 NS. COMMESSA N. 0.5913
ORDER N. OUR WORK ORDER N.
POS. COMM. 03 QUANTITÀ 1.96,720
ITEM QUANTITY
FERNNOX
FOTOCOPIA CONFORME ALL'ORIGINALE

Questo certificato è emesso da un sistema computerizzato e valido senza firma. Il certificato originale riporta il marchio DMV in colore blu lungo la diagonale. Il possessore dell'originale, qualora rilasci copie, deve attestarne a sua nome la conformità, assumendosi ogni responsabilità per usi illeciti o comunque non consentiti dalla DMV Stainless Italia s.r.l.
Alterazioni e/o falsificazioni saranno perseguite a termini di legge.

This certificate is issued by a computerized system and it is valid without signature. On the original certificate the trade-mark DMV blu coloured along the diagonal is stamped. In case the owner of the original certificate would release a copy of it, he must attest its conformity to the original one taking upon himself the responsability for any unlawful or not allowed use.
Any alteration and/or falsification will be subject to the law.

Ce certificat est délivré par un système informatisé et il est valable sans signature. Le certificat original comporte la marque DMV de couleur bleu le diagonale. Dans le cas où le possesseur de l'original délivrera une copie, il devra attester la conformité en son nom, en s'endossant toute la responsabilité pour des usages illicites ou, tout simplement, pas permis par DMV Stainless Italia s.r.l.
Toute altération ou contrefaçon seront susceptibles d'entraîner des poursuites légales.

015

DATE	D.M.V. STAINLESS ITALIA S.R.L.	CHIEF OF INSPECTION DPT
6/05/1996		Ivan NEMBRINI

MANNESMANN
STAINLESS VALLOUREC

MW STAINLESS Deutschland GmbH
Postfach 16 01 20 • D-42830 Remscheid

INSPECTION CERTIFICATE 3.1.B ACC. TO
EN 10204: 1991 + A1:1995

14195 1/

To delivery note no 42/ / Delivery date . .

MW-order no 820/0537 4 Destination ITALY

Purchaser order no 4711609

Date of order 96.10.04 User-order no 2404/96
User

Supply plant MHP/REMSCHEID

Date of order 96.10.04 User-order no 2404/96

HIGH ALLOY STEEL TUBES # SEAMLESS, COLD FINISHED #
TECHNICAL TERMS OF DELIVERY DIN 17458, EDIT. 07.85,
PRUEFKLASSE 2 #
ASTM A 312 M - 94 B AND SA 312 M, EDITION 1995 / ASME BOILER
PRESSURE VESSEL CODE, SECTION II, EDITION 1995 #
IN CONNECTION WITH NF A 49-117, EDIT. 09.85 # TP 304 L
/ TP 304 / 1.4306 / 1.4301 / Z 2 CN 18.10 / Z 6 CN 18.09 #
FINISH: SOLUTION ANNEALED, FREE FROM SCALE #
ENDS PLAIN, SQUARE-CUT TO TUBE AXIS, DEBURRED #
TUBE TOLERANCE CLASS D 3 / T 3 ACC. TO DIN EN ISO 1127-05.96
IN RANDOM MILL LENGTH 4000 - 7000 MM

Interim Certificate
for information only
dated 25.3.97 signed

Item	Deliv.	Dimension/Item text	Quty/pcs	kg/lbs	Length m/ft
1	Part	OUT.DIAM. W.THICKN. 141,3 X 3,4 MM P.O.-NO. 2404/96 PACKED IN CASES	16	1.142 2.518	96,84 317,72

Results of ladle analysis (S) %

HEAT NO	STEELMAK.PROCESS	C	SI	MN	P	S	CR	NI
MINIMUM							18,000	10,000
MAXIMUM		0,030	1,000	2,00	0,045	0,0300	20,000	12,500
190220	S	0,024	0,380	1,88	0,019	0,0070	18,470	10,380

ZAMBETTI & LUMINA S.r.l. ENDINE GAIANO (BG)
N. .....
Controllo Qualità

016

STAINLESS VALLOUREC DMV-order no 8207053/ 4

Purchaser order no 4711609 14195 2

Tensile test results

Sample no	Heat no	Test piece dimension mm	Test piece type	Test piece direction	Test piece loc.	Test piece orient.	Test temperature Grad C	Yield/proof strength Rp0,2 N/qmm	Rp1 N/qmm	Tensile strength Rm N/qmm	Elongation (%) Lo=5.65VSO(A5)	Y/T Ratio
MINIMUM								180	215	460	40,0	
MAXIMUM										680		
161	190220			longit			RT	256	291	583	58,2	

Hardness test results

Sample no	Heat no	HRB Value 1	Value 2	Value 3	Value 4
MAXIMUM		90,0	90,0	90,0	90,0
161	190220	73,0	73,0	73,0	
161	190220	74,0	74,0		

Other test results

-HEAT TREATMENT: 1040 DEGREES C AIR
-ULTRASONIC TEST ACC. TO SEP 1915: SATISFACTORY
-HYDROSTATIC TEST, 80 BAR: SATISFACTORY
-FLATTENING TEST: SATISFACTORY
-RING EXPANDING TEST OF 100 % AT ONE END: SATISFACTORY
-VISUAL AND DIMENSIONAL INSPECTION SATISFACTORY
-INTERCRYSTALLINE CORROSION TEST AS PER DIN 50914 SATISFACTORY
-MATERIAL IDENTIFICATION TEST OF ALL TUBES BY SPECTROGRAPHIC ANALYSIS: SATISFACTORY
-INTERCRISTAL CORROSION TEST ACC. TO NF A 05-159: SATISFACTORY

Marking of the products

DMV-D -MATERIAL-DIMENSION-HEAT-NO-WA
H-S-2-US-ASTM A 312M/ASME SA 312M-SMLS-49-117-
TP 304/TP 304 L-1.4301/1.4306-
Z2 CN 18-10/Z6 CN 18-09

IL PRESENTE CERTIFICATO E' VALIDO PER
CLIENTE CUSTOMER FERRINOX
ORDINE N. ORDER N. 121
POS. COMM. ITEM
NS. COMMESSA N° OUR WORK TICKET N° A 29
QUANTITÀ QUANTITY
FERRINOX ACCIAI INOSSIDABILI
FOTOCOPIA CONFORME ALL'ORIGINALE

THE PRODUCTS HAVE BEEN TESTED IN ACCORDANCE WITH THE PURCHASE SPECIFICATION AND ARE FOUND TO BE SATISFACTORY

MHP MANNESMANN HOESCH PRÄZISROHR GMBH
WERK REMSCHEID, ABNAHME
42831 REMSCHEID, POSTFACH 160210
SIGNED STOPKA, INSPECTION REPRESENTATIVE
REMSCHEID, THE 97.03.24, TELEPHONE: (02191) 366-205
TELEFAX: (02191) 366-220

This testimonial and certification respectively is recorded by computer system and is valid without signature. Alteration or use for other products are regarded as falsification of documents and will be subject to criminal jurisdiction.

ZAMBETTI & LUMINA s.r.l. N. ..... Controllo Qualità ENDINE GAIANO (BG)

017

[redacted]

INSPECTION [redacted]
CERTIFICATE
ACC TO
EN 10 204 3.1.B

Date of order	Customer order No	Cust No/Exp (Cons
970307	A7-000237	250-099
Date of order	**Our order No**	**Cust No/Exp (Buye**
123913	300-36609 50127	250-700

MATERIAL DESCRIPTION:
SEAMLESS STAINLESS STEEL TUBES

STEEL GRADE:
SANDVIK 3R60

INSPECTOR'S S

!QA-TUBE!

MELTING PROCESS:
E

TECHNICAL REQUIREMENTS:
DIN 17458, TESTING CLASS 1

MATERIAL (STANDARD):
X2CRNIMO18143

MATERIAL NO
1.4435

EXTENT OF DELIVERY:

IT	DIMENSIONS (MM) ETC.	PIECES	QUANTITY	HEAT NO	LOT NO
05	TST-3R60-159-4.5	8	890.0	439793	47178
	TOTAL	8	890.0 KG		

HEAT ANALYSIS (%):

HEAT NO	C	SI	MN	P	S	CR	NI	M
439793	.017	.39	1.61	.031	.006	17.42	12.91	2.

RESULT OF TESTING:

LOT NO	RP0.2 N/MM2	RP1.0	RM N/MM2	A5 %	HARDNESS	HYDR.T MPA
47178	267	308	603	49		8.

SPECTROSCOPIC IDENTIFICATION: SATISFACTORY.
VISUAL INSPECTION AND DIMENSIONAL CONTROL: SATISFACTORY.
MARKING :
SANDVIK 3R60 W.NR 1.4435 H S PK 1 159.00 X 4.50 HT 439793

HEAT TREATMENT: SOLUTION ANNEALED AND QUENCHED.

THE MATERIAL IS MANUFACTURED ACCORDING TO A QUALITY SYSTEM, APPROVED AND REGISTERED TO ISO 9001

ZAMBETTI & LUMINA s.r.l. N..... Controllo Qualità ENDINE GAIANO (BG)

IL PRESENTE CERTIFICATO E' VALIDO PER:
CLIENTE CUSTOMER TERRINOX
ORDINE N. ORDER N. 1EL
NS. COMMESSA N° OUR WORK TICKET N° A99413
POS. COMM. ITEM 08
QUANTITÀ QUANTITY 1508
FERRINOX
ACCIAI INOSSIDABILI
FOTOCOPIA CONFORME ALL'ORIGINALE

AB SANDVIK STEEL
Quality Assurance Department
ANITA RUNSTEN / CERTIFICATES

Beteckningar enligt ISO, v g vänd
Symbols according to ISO, PTO
Kurzzeichen laut ISO b.w.
Symboles selon ISO, t.s.v.p.

Postal address	Telephone	Division	Telefax	MEMO	Bankers	Postal giro accou
AB SANDVIK STEEL S-811 81 SANDVIKEN SWEDEN	Nat 026-26 00 00 Int +46 26-26 00 00 Telex	Strip	+46 26 27 23 07	SESTLXST		
		Wire	+46 26 27 47 20	SESTLXWI		
		Tube	+46 26 25 27 70	SESTLXTU	Svenska Handelsbanken	
		Semif.Prod.	+46 26 26 40 30	SESTLXSO	S-E Banken	

018

DMV STAINLESS France SERVICE QUALITE B.P. 10 - 21501 Montbard cedex	ABNAHMEPRUFZEUGNIS EN 10204 - 3.1.B	9652861	Sheet/Seite 1

CLIENT
Purchaser / Besteller
COMMANDE No 95/1314/ No COMMANDE USINE GZ3804030
Order Nr / Besteller Nr (Identification Fourniture/Certificat)
SUBORDER / ITEM 4711330

TYPE DE PRODUIT Tubes sans soudure / Seamless Pipes/Tubes / Nathlose Stahlrohre — Finis à chaud / Hot finished / Warmgefertig — Série pipe / Pipe series / Série pipe — Hypertrempé Décapé / Annealed Pickled / Abgeschreckt Gebeitz

NUANCES ET SPECIFICATIONS / Grade and Specifications / Stahlsorte und Liefervorschriften
TP304L/TP304
ASTM A 312/ASME SA 312
MARQUAGE/MARKING/MARKIERUNG : DMV -F- ASTM A312 / ASME SA312
TP304L/TP304 - HEAT : 386060 - 8" NPS.SCH 40S - 219.10 X 8.18 -
SEAMLESS - GZ3804030 -

QUANTITE / Quantity / Liefermenge			DIMENSIONS (Diam. X Ep. X Lg(mm)) / Size / Abmessung	
Nombre	M	Kg		
[illegible]	67.02	2910	219.10 x 8.18 SIZE 8" SCH 40S	5840 / 6400

ACTERISTIQUES CHIMIQUES / Chemical Analysis / Chemische Zusammenseltzung
boration / Melting Process / Erschmelzungsart ACIER ELECTRIQUE / ELECTRIC STEEL / ELECTROSTAHL

	C	Mn	P	S	Si	Ni	Cr				
MINI MAXI	0.035	2.00	0.040	0.030	0.75	8.00 11.00	18.00 20.00				
Coulée / Heat 386060	0.021	1.84	0.029	.0010	0.27	10.23	18.36				

ACTERISTIQUES MECANIQUES ET METALLURGIQUES / Mechanical and Metallurgical Properties / Mechanische und Metallurgische Kennwerte

	Re. à 0.2% Ys 0.2% STRECKGRENZE MPA	Rm TENSILE TEST ENGFESTIGUNG MPA	A % ELONGATION DEHNUNG 50.8 mm	APLATISSEMENT FLATTENING RINGFALTV		
CONDITIONS IMPOSEES	MINI 205	MINI 515	MINI 35			
272 M273	297	584	50.9	BON-OK-OB BON-OK-OB		

COPIA CONFORME ALL'ORIGINALE
FERRINOX ACCIAI INOSSIDABILI srl

ZAMBETTI & LUMINA s.r.l. N.... Controllo Qualità ENDINE GAIANO (BG)

METALMA spa

RAME: ESTRATTO TABELLE UNI 5649 / 3310

SEMILAVORATI	COMPOSIZIONE CHIMICA					STATO FISICO	CARATTERISTICHE MECCANICHE		
	Cu	Bi	Pb	O_2	P		R	A	HB
Piatto/Barra Cu ETP									
UNI 5649-71	99,90	0,001	0,005	0,04	-	-	-	-	-
UNI 3310	-	-	-	-	-	Crudo H20	30+37	5	75+90
Lastra/Nastro Tubo Cu DHP									
UNI 5649-71	99,85	0,001	0,01	-	0,013 + 0,050	-	-	-	-
UNI 3310	-	-	-	-	-	Cotto R	20+25	40	40+60
UNI 3310	-	-	-	-	-	Crudo H10	25+29	10	60+75
UNI 3310	-	-	-	-	-	Crudo H20	30+37	5	75+90

APPLICAZIONI:

* **Cu ETP** Per semilavorati destinati a conduttori elettrici o per leghe pregiate.-
* **Cu DHP** Per semilavorati per i quali non vi sono esigenze di conduttività elettrica, ma aventi buone caratteristiche di plasticità ed esenti da fenomeni di fragilità in ambiente riducente.-

ZAMBETTI & LUMINA S.r.l. N..... Controllo Qualità ENDINE GAIANO (BG)

silmet

ATTESTATO DI ANALISI SU PRODOTTO FINITO N° 1295

DATA	17/11/95
DIMENSIONI TUBO	18 X 1
STATO FISICO	COTTO
PRODOTTO IL	16/11/95
RIFERIMENTO PCCL	945

COMPOSIZIONE CHIMICA

Cu	99,955
Zn	0,0000
Pb	0,0018
Fe	0,0000
Sn	0,0000
Ni	0,0052
P	0,0345
Mn	0,0018
Al	0,0011
Si	0,0000

NOTE

ZAMBETTI & LUMINA S.r.l. ENDINE GAIANO (BG) N..... Controllo Qualità

VISTO COLLAUDO

GHIDINI TRAFILERIE S.p.A.

Fonderie Estrusioni Laminazioni Trafilerie Corderie

ERTIFICATO DI COLLAUDO N° 1801 DEL 17.11.95

OVE ESEGUITE SU Tubo Cu DHP 18x1 rotoli

ENTE

NFERMA ORD. CLIENTE Pcl 245 16.11.95

	PROVINI		PROVE MECCANICHE						PROVE ELETTRICHE		
			trazione					durezza	resistenza elettrica		Condutt.
N.	Dimensioni mm.	Sezione iniziale S_0 mm²	Limite deformazione permanente 0,2% Totale Fs N.	Limite deformazione permanente 0,2% Unitario Rs N. / mm²	Resistenza a trazione carico massimo Totale Fm N.	Resistenza a trazione carico massimo Unitario Rm N. / mm²	Allungam. dopo rottura $L_0 = 40$ A %	H	Lettura al ponte ..... °C	Specifica a 20 °C Ω mm² / m	% I.A.C.S.
Dati richiesti secondo tabella UNI 6507						7,220	7,45				
6	18,01x0,90	48,35			11510	238,05	54,6				
7	18,01x0,90	48,35			11120	229,98	49,8				

ZAMBETTI & LUMINA S.r.l. N. ... Controllo Qualità ENDINE GAIANO (BG)

Visto collaudo Cliente | Visto collaudo | Visto responsabile

Sede Amm.: Via Armieri, 8 - 25066 Lumezzane (Brescia) Italy
telefono (030) 871461 - telefax (030) 871998 - telegrammi GHIDINITRAFILERIE

Zambetti
& Lumina

SEZIONE

SECTION

D

Zambetti & Lumina srl

PROCEDURE QUALIFICATION RECORD

Doc. N. PQR 0107

Emesso il 20.06.91

Foglio 1 di 2

PQR N. 0107 according to ASME

WPS N. 0107 Rev. 0

WELDING PROCESS

SMAW a	[X]	OFW f	[ ]
SAW b	[ ]	ESW g	[ ]
GTAW c	[X]	EGW h	[ ]
GMAW d	[ ]	EBW i	[ ]
PAW e	[ ]	SW l	[ ]

TYPE

Manual	1	[X]
Automatic	2	[ ]
Semiautomatic	3	[ ]
Machine	4	[ ]
Other	5	[ ]

SEQUENCE

from one side [X] c1 + a1

from both side [ ]

BEVEL PREPARATION

Workmachined	[X]
Grinded	[ ]
Cutted	[ ]
Oxycutted	[ ]
Other	[ ]

BACKING

Yes [ ] No [X]

Back.Mater. ____

Welding Joint Type SEE JOINT

WELD METAL DEPOSIT GTAW 1 = 3 mm
WELD METAL DEPOSIT SMAW 2÷N: OTHER

MATERIAL

Group N. P 8.1 to P 8.1

Material A240 316L to A240 316L

VALIDITY

Base Metal 1,58 to 16 mm

Weld Metal 1,58 to 16 mm

Diameter over 2"

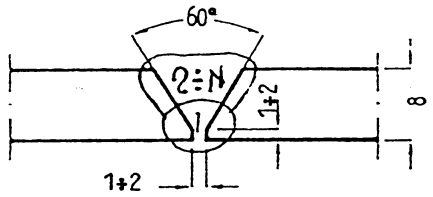

WITH BACK GAS RATE 18/19 LT/1'

Layer	Proc	FN.	AN.	SFA	AWS	Dia.	+/-	Amps.	Volts	Weld Metal	Flux or Gas	Gas rate	Speed
1	c1	5	8	5.9	ER 316 L	2.4	+	75÷80	-	FILOGASTIG 316L	ARGON	9/10 LT/1'	
2÷N	a1	5	8	5.4	E 316 L	3.25	-	90÷110	-	RS 316 L			

PREHEAT

Temp. ≥20 C

interpass T. ≤200 C

Preheat Maint. ____ h

TECHNIQUE 1

Bead	String	[X]	Weave	[ ]
Pass	Multiple	[X]	Single	[ ]
Electrode	Multiple	[ ]	Single	[X]

CLEANING

Initial Cleaning BRUSHING

Interpass Clean. BRUSHING

Back Gouging NO

Peening NO

POSITION

		G	F	S
Flat	1	[X]	[ ]	[ ]
Rotated	1R	[ ]	[ ]	
Horizontal	2	[ ]	[ ]	[ ]
Rotated	2R		[ ]	
Vertical	3	[ ]	[ ]	
Overhead	4	[ ]	[ ]	[ ]
All position	5	[ ]	[ ]	
All pos. 45deg	6	[ ]		

Weld Progress Up [ ] Down [ ]

HEAT TREATMENT

	1st	2nd	1st H.T.
Annealing	[ ]	[ ]	T. ____ C
Normalizing	[ ]	[ ]	H.T. ____ C/h
Tempering	[ ]	[ ]	C.T. ____ C/h
Solubilizing	[ ]	[ ]	Maint. ____ h
Quenching	[ ]	[ ]	2nd H.T.
Interm.PWHT	[ ]		T. ____ C
Stress Relief.	[ ]	[ ]	H.T. ____ C/h
P.W.H.T.		[ ]	C.T. ____ C/h
			Maint. ____ h

NON DESTRUCTIVE TEST

	VI	PT	MT	RT	UT
Bevel	[X]	[ ]	[ ]	[ ]	[ ]
Root pass	[X]	[ ]	[ ]	[ ]	[ ]
Interpass	[ ]	[ ]	[ ]	[ ]	[ ]
Final pass	[ ]	[ ]	[ ]	[ ]	[ ]
After goug.	[ ]	[ ]	[ ]	[ ]	[ ]
On all weld	[X]	[X]	[ ]	[X]	[ ]

Revisionato da SERTEG & ZAMBETTI & LUMINA

Revisionato il 20.06.91

Revisione N. 0

& ZAMBETTI & LUMINA s.r.l.

BUREAU VERITAS MILAN ITALY WITNESSED SURVEYOR A. NICOLINI DATE

BUREAU VERITAS SURVEYORS PARIS 1828 INTERNATIONAL REGISTER MILAN

Zambetti & Lumina srl

PROCEDURE QUALIFICATION RECORD

Doc. N. PQR 0107

Emesso il 20.06.91

Foglio 2 di 2

Results of PQR N. 0107

TENSILE TESTS

Specimen N.	Width	Thk	Area	T.S. N/mm2	Y.P. N/mm2	E %	Type of failure
01-07	19.1	8.5	162.3	564			DUCTILE - IN THE WELD
01-07	19.1	8.4	160.4	562			DUCTILE - OUT OF WELD

BEND TESTS

Face	Root	Side
GOOD	GOOD	
GOOD	GOOD	

HARDNESS AND MACRO

Hardness Type _____

B.M.	W.M.	H.A.Z.

TOUGHNESS TESTS

Specimen N.	Notch Loc.	Notch Type	Test Temp	Impact Value	Remarks

CH.ANAL.

C =	Mn=	Si=	S =	P =
Cr=	Ni=	Mo=	Ti=	Co=
Cu=	Nb=	Va=		

FILLET

Visual Insp. SATISFACTORY Yes ☐ No ☐

Penetrat.into Parent Metal Yes ☐ No ☐

Heat Treatment Chart N. / performed by /

Certificate of Radiographic Test N. 1501/91/ND performed by QUALITY CONTROL

Mechanical Test Certificate N. 2581/91/PM performed by QUALITY CONTROL

Other Test / performed by /

We certify that the statement in this record are correct and that the test weld were prepared, welded and tested in accordance with: ASME IX

WELDERS

Welder Name	Process	Stamp N.
PRIORE GIUSEPPE	GTAW	S3
PRIORE GIUSEPPE	SMAW	S3

Date	Manufacturer
15/07/91	ZAMBETTI & LUMINA

ZAMBETTI & LUMINA S.r.l.

Test conducted by QUALITY CONTROL

Date	Agency Inspection
15/07/91	BUREAU VERITAS

BUREAU VERITAS MILAN ITALY WITNESSED REVIEWED SURVEYOR A. NICOLINI DATE

Revisionato da				
Revisionato il				
Revisione N.				

BUREAU VERITAS SURVEYORS PARIS 1828 MILAN INTERNATIONAL REGISTER

Zambetti & Lumina srl	PROCEDURE QUALIFICATION RECORD According to ASME Code Sect. IX	PQR 12-96 Page 1 of 2 Date

WPS Nr. 12-96

Welding Process GMAW

Types (Manual , Automatic ,Machine , Semi-autom.) SEMI-AUTOMATIC

JOINT (QW-402)

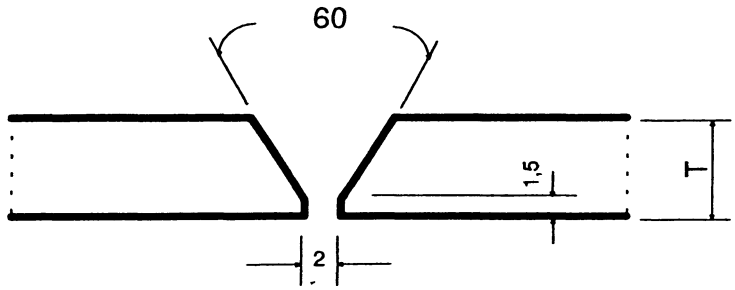

BUREAU VERITAS SURVEYORS PARIS 1828 MILAN INTERNATIONAL REGISTER

BASE METALS (QW-403)

Material Specification	ASTM A 240 TP. 304L
P-No. to P-No.	8 to 8
Test Thickness (m m)	20
Test Diameter (mm)	/
Other	/

PWHT (QW-407)

Temperature (° C)	/
Time (h)	/
Heating Rate (°C / h)	/
Cooling Rate (°C / h)	/
Other	/

FILLER METALS (QW-404)

Process (es)	GMAW
SFA Specification	5.9
AWS Classification	ER 308L
Filler Metal F-No.	6
Weld Metal A-No.	8
Chemical Analysis	/
Size of Filler Metal (mm)	1,0
Brand Name Wire/Electrode	OK AUTROD 16.12
Manufacturer	ESAB
Brand Name Flux	/
Manufacturer	/
Deposit. Weld Metal (mm)	20
Other	/

GAS (QW-408)

	Shielding	Trailing	Backing
Composition (%)	98%Ar + 2%CO2	/	98%Ar + 2%CO2
Flow Rate (l / l')	20 -24	/	28 - 30

Other /

ELECTRICAL CHARACTERISTICS (QW-409)

Process (es)	GMAW
Current	DC
Polarity	REVERSE
Amps.	140 - 170
Volts	27 - 34
Tungsten Size (mm)	/
Other	METHOD OF ARC TRANSFER : GLOBULAR

POSITION (QW-405)

Position	1G
Progression (Uphill-Downhill)	/
Other	/

PREHEAT (QW-406)

Preheat temperature (°C)	20
Interpass Temperature (°C)	150
Other	/

TECHNIQUE (QW-410)

Travel Speed (cm / l')	45
String or Weave Bead	STRING
Oscillation (mm)	/
Multipass or Single Pass	MULTIPASS
Single or Multiple Electrodes	/
Welding Sequencies	ALL PASSES : GMAW
Other	BACK GOUGING : GRINDING

Zambetti & Lumina srl	PROCEDURE QUALIFICATION RECORD According to ASME Code Sect. IX	PQR 12-96 Page 2 of 2 Date

TENSILE TEST - (QW-150)

Test Nr.	Width (mm)	Thickness (mm)	Area (mm^2)	Ultimate Total Load (N)	Ultimate Unit Stress (N / mm^2)	Type of Failure & Location
1	20,0	19,8	396,0	210.000	530	DUCTILE - OUTSIDE WELD
2	20,0	19,7	394,0	213.000	540	DUCTILE - OUTSIDE WELD

ALL WELD METALTENSILE TEST

Test Nr.	Diameter (mm)	Area (mm^2)	Length (mm)	Yeld		Tensile		Elongation	
				Total (N)	Unit (N/mm^2)	Total (N)	Unit (N/mm^2)	Total (mm)	Unit (%)

GUIDED BEND TEST - (QW-160)

Type and Figure No.	Results	Type and Figure No.	Results
Transversal Side - QW 462.2	Good	Transversal Side - QW 462.2	Good
Transversal Side - QW 462.2	Good	Transversal Side - QW 462.2	Good

TOUGHNESS TEST - (QW-170)

Test Nr.	Notch Location	Notch Type	Test Temp. (°C)	Impact Value (J)	Lateral Expansion		Drop Weight	
					(% Shear)	(Mils)	Break	No Break

FILLET-WELD TEST - (QW-180)

Result : Satisfactory ❑ Yes ❑ No Penetration into Parent Metal ❑ Yes ❑ No

Macro Result

OTHER TESTS

Macro Examination	SATISFACTORY
Hardness Test	/
Chemical Analysis	/
Non Destructive Examination	RADIOGRAPHIC : SATISFACTORY

BUREAU VERITAS SURVEYORS PARIS 1828 MILAN INTERNATIONAL REGISTER

Welder' s Name and Stamp ZANNI GIANFRANCO - S18

Test Conducted By BUREAU VERITAS Laboratory Test Nr.

We certify that the statement in this record are correct and that the test weld were prepared , welded and tested in accordance with the requirements of Section IX of the ASME Code

MANUFACTURER	DATE	TESTING AGENCY
Zambetti & Lumina s.r.l. Cont. Qualità II° Livello SNT-TC-IA Walter Spelgatti	18 MAR. 1996	BUREAU VERITAS ITALY WITNESSED REVIEWED SURVEYOR A. NICOLINI

Zambetti & Lumina

WELDING PROCEDURE SPECIFICATION

According to ASME CODE Sect.IX

WPS Nr. 0107/C — Pag. 1 / 1

PQR Nr. 0107

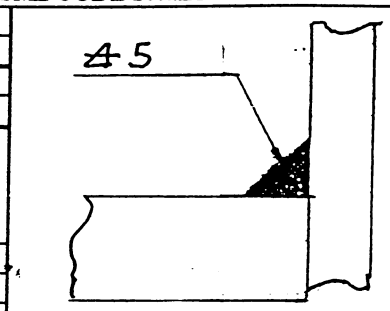

QW 402	Joint preparation	Grinding or Machining
	Back Gouging	Grinding
QW 403	Materials Specification	ASTM A240 TP.304L
	P No. to P No.	8,1 to 8,1
	Thickness (mm)	5
	Diameter (mm)	/
	Welding Process	GTAW - MANUAL
	Weld Passes	ALL
	Backing Support	NONE
QW 404	Deposited Weld Thickness (mm)	5
	Size of Weld Pass (mm)	<5
	Size of Filler Metal (mm)	2,4
	Filler Metal Brand Name	FILOGASTIG
	Flux Brand Name	/
	A No.	8
	F No.	5
	SFA Specification	5,9
	AWS Classification	ER 316L
	Other	/
QW 405	Welding Position	1G
	Welding Progression	/
QW 406	Preheating Temperature (° C) min.	20
	Interpass Temperature (° C) max.	<200
	Post-heating Tem. & Time (° C& hr)	/
	Method of Heating	/
	Method of Control	/
QW 408	Shielding Gas	99,99 % ARGON
	Flow Rate (L / 1')	9/10 LT/1'
	Backing Gas	/
	Flow Rate (L / 1')	/
	Trailing Gas	/
	Flow Rate (L / 1')	/
QW 409	Current	DIRECT
	Polarity	STRAIGHT
	Amps	75 ÷ 80
	Volts	/
	Heat Imput (KJ/ cm)	/
QW 410	Travel Speed (cm / 1')	/
	Wire Feed Speed (cm / 1')	/
	Contact to Work Distance (mm)	/
	Method of Arc Transfer	GLOBULAR
	Bead Type (Weave or String)	STRING
	Oscillation (mm)	5
	Gas Cup Size (mm)	/
	Tungsten Electrode Size (mm)	/
	Multipass or Single Pass	SINGLE
	Single or Multiple Electrode	SINGLE
	Cleaning (Initial & Interpass)	BRUSHING AND GRINDING
	Peening	/
	Other	/
QW 407	PWHT Temperature (° C)	/
	PWHT Holding Time (hr)	/

Rev.	Date	Descr.	Prep.	Appr.
0	17/06/ 96		Walter Zambetti	

Zambetti & Lumina

WELDING PROCEDURE SPECIFICATION

According to ASME CODE Sect.IX

WPS Nr. 7033/A		Pag. 1 / 1
PQR Nr. 0107 + 12-96		
QW 402	Joint preparation	Grinding or Machining
	Back Gouging	Grinding
QW 403	Materials Specification	ASTM A240 TP.304
	P No. to P No.	8.1 to 8.1
	Thickness (mm)	25
	Diameter (mm)	/

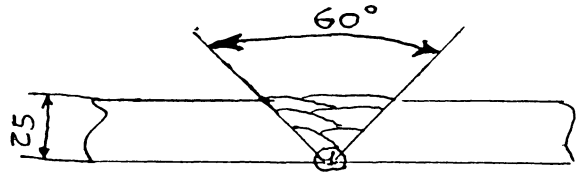

	Welding Process	GTAW - MANUAL	GMAW - SEMIAUTOM.
	Weld Passes	1ST	FILL-OUT - RIEMPIMENTO
	Backing Support	NONE	YES, WELD METAL
QW 404	Deposited Weld Thickness (mm)	<6	< 30
	Size of Weld Pass (mm)	<5	< 10
	Size of Filler Metal (mm)	2,4	1.0
	Filler Metal Brand Name	FILOGASTIG	ESAB OK AUTROD 16,12
	Flux Brand Name	/	/
	A No.	8	8
	F No.	5	6
	SFA Specification	A 5.9	A 5.9
	AWS Classification	ER 316L	ER 308L
	Other	/	/
QW 405	Welding Position	1G	1G
	Welding Progression	/	/
QW 406	Preheating Temperature (° C) min.	> 20	>20
	Interpass Temperature (° C) max.	<200	< 200
	Post-heating Tem. & Time (° C& hr)	/	/
	Method of Heating	/	/
	Method of Control	/	/
QW 408	Shielding Gas	99,99 % Ar	98% Ar + 2% CO2
	Flow Rate (L / 1')	9/10 LT/1'	20 - 24
	Backing Gas	/	/
	Flow Rate (L / 1')	/	/
	Trailing Gas	/	98% Ar + 2% CO2
	Flow Rate (L / 1')	/	28 - 30
QW 409	Current	DIRECT	DIRECT
	Polarity	STRAIGHT	REVERSE
	Amps	75 - 80	120 - 150
	Volts	/	22 - 24
	Heat Imput (KJ/ cm)	/	/
QW 410	Travel Speed (cm / 1')	/	40 - 46
	Wire Feed Speed (cm / 1')	/	/
	Contact to Work Distance (mm)	/	/
	Method of Arc Transfer	GLOBULAR	GLOBULAR
	Bead Type (Weave or String)	STRING	STRING
	Oscillation (mm)	5	/
	Gas Cup Size (mm)	/	20
	Tungsten Electrode Size (mm)	/	/
	Multipass or Single Pass	SINGLE	MULTIPASS
	Single or Multiple Electrode	SINGLE	/
	Cleaning (Initial & Interpass)	BRUSHING AND GRINDING	BRUSHING AND GRINDING
	Peening	/	/
	Other	/	/
QW 407	PWHT Temperature (° C)	/	/
	PWHT Holding Time (hr)	/	/

Rev.	Date	Descr.	Prep.	Appr.
0	21/04/ 97		W. Schwab	

Zambetti & Lumina srl

WELDER AND OPERATOR QUALIFICATION TESTS

Doc. N. WOP 110

Emesso il 20.06.91

Foglio 1 di 1

Welder Name PRIORE GIUSEPPE Stamp N. S3 Using WPS N. 0107 Rev. 0

VARIABLES	VALUE USED IN QUALIFICATION	QUALIFICATION RANGE
Process	SMAW [X] SAW [ ] GTAW [X] GMAW [ ] PAW [ ] OFW [ ] ESW [ ] EGW [ ] EBW [ ] SW [ ]	SMAW [X] SAW [ ] GTAW [X] GMAW [ ] PAW [ ] OFW [ ] ESW [ ] EGW [ ] EBW [ ] SW [ ]
Process Type	Man [X] Aut [ ] S/A [ ] Mac [ ] Oth [ ]	Man [X] Aut [ ] S/A [ ] Mac [ ] Oth [ ]
Backing	Yes [ ] No [X]	Yes [X] No [X]
Material Spec. PN	P8 [ ] [ ] to P8 [ ] [ ]	P8 [ ] [ ] to P8 [ ] [ ]
Thickness	[ ] FILLET [X] GROOVE	[X] FILLET all [X] GROOVE UP TO 16 MM
Diameter	[ ] FILLET [ ] GROOVE	[X] FILLET all [X] GROOVE OVER 2"
Filler Metal	AWS ER 316/ E316 SFA 5.4/5.9 FN. 5 [ ] [ ]	AWS ER 316/ E316 SFA 5.4/5.9 FN. 5 [ ] [ ]
Positions	1 1R 2 2R 3 4 5 6 G [X] [ ] [ ] [ ] [ ] [ ] [ ] F [ ] [ ] [ ] [ ] [ ] [ ] [ ] S [ ] [ ] [ ]	1 1R 2 2R 3 4 5 6 G [X] [X] [X] [ ] [ ] [ ] [ ] F [X] [X] [X] [X] [ ] [ ] [ ] S [X] [X] [ ]
Weld Progression	Up [ ] Down [ ]	Up [ ] Down [ ]
Type of Gas	GAS ARGON	GAS ARGON
Electrical Characteristics	CURRENT DIRECT POLARITY NEG/POS	CURRENT DIRECT POLARITY NEG/POS

Macro result: SATISFACTORY Yes [ ] No [ ]

Fracture test: /

We certify that the statement in this record are correct and that the test weld were prepared, welded and tested in accordance with: ASME IX CONJOINTLY TO PQR 0107

BEND TEST	Type	No.	Results
	Face	2	SATISFACTORY
	Root	2	SATISFACTORY
	Side		

Radiographic Results: SATISFACTORY Yes [X] No [ ]

Radiogr. Tests Cert. N. 1501/91/ND

Date	Manufacturer
15/07/91	ZAMBETTI & LUMINA

ZAMBETTI & LUMINA S.r.l.

Test conducted by

Date	Agency Inspection
15/07/91	BUREAU VERITAS

BUREAU VERITAS MILAN ITALY WITNESSED REVIEWED SURVEYOR A. NICOLINI DATE

Revisionato da				
Revisionato il				
Revisione N.				

BUREAU VERITAS SURVEYORS PARIS 1828 MILAN INTERNATIONAL REGISTER

Zambetti & Lumina srl	WELDER / WELDING OPERATOR QUALIFICATION RECORD According to ASME Code Sect. IX	WPQ S18-12-96

NAME OF WELDER ZANNI G. FRANCO **STAMP No. S18**

WPS No. 12-96

THE ABOVE WELDER IS QUALIFIED FOR THE FOLLOWING RANGES :

VARIABLES	VALUES USED IN QUALIFICATION	QUALIFICATION RANGE
Process	GMAW	GMAW
Type	SEMI-AUTOMATIC	SEMI-AUTOMATIC
Backing	YES	YES
Materials specification	ASTM A 240 TP. 304L	
P-no. to P-no.	8 / 8	1 - 8 to 1-8
Type of Joint (Groove or Fillet)	GROOVE	GROOVE & FILLET
Thickness of Test Coupon (mm)	20	MAX TO BE WELD
Diameter of Test Coupon (mm)	/	> 78
Filler Metal SFA Spec	5.9	5.9 / 5.18 / 5.28
Filler Metal AWS Class.	ER 308L	ALL THOSE INCLUDED IN FNo
F No.	6	6
Position	1G	1G-1F
Weld Progression	/	/
Shielding Gas	Ar 98% + CO2 2%	Ar 95 / 99 % + CO2 1 / 5%
Type Of Current	DC	DC
Polarity	REVERSE	REVERSE
Joint Tracking	/	/
Visual Control	/	/

GROOVE WELD

Guided bend test (type , No. and results) :	/
Radiografphc examination of test sample :	SATISFACTORY
Radiogaphic examination of production weld :	/
Visual Examination :	SATISFACTORY

FILLET WELD

Fracture test :	/
Length and percentage of defects :	/
Macro test-Fusion :	/
Appearance and fillet size :	/
Visual Examination :	/

BUREAU VERITAS SURVEYORS PARIS 1828 MILAN INTERNATIONAL REGISTER

Test conducted by (Laboratory Test No.)

We certify that the statement in this record are correct and that the test welds were prepared , welded and tested in accordance with the requirements of Section IX of the ASME Code.

MANUFACTURER	DATE	TESTING AGENCY
Zambetti & Lumina s.r.l. Cont. Qualità II° Livello SNT-TC-1A Walter Spelgatti	1 8 MAR. 1996	BUREAU VERITAS MILAN ITALY WITNESSED REVIEWED SURVEYOR A. NICOLINI DATE

Zambetti
& Lumina

SEZIONE

SECTION

E

Zambetti & Lumina	SISTEMA QUALITA' *QUALITY SYSTEM* RAPPORTO DI ESAME CON LIQUIDI PENETRANTI *Penetrant liquid test report*	RLP N° 14/97 COMM. *job* 7033 DATA *Date* 18-06-97

CLIENTE *Customer* ANSALDO ENERGIA S.P.A.	ORDINE *Order* BC 132126 DEL 11-03-97	COMM. CLIENTE *Customer's job* F1000/EM
OGGETTO *Subject* PARTICOLARI VARI CAMINO CRIOGENICO	DISEGNO *Drawing* 620 RM 07428 620 RM 07431 620 RM 07432	QUANTITA' *Quantity* 1 + 1 + 1

Stato di controllo *Testing status*	☐ Preliminare *Preliminary*	☒ Finale Z&L *Final Z&L*	☐ Finale ufficiale *Final official*	
Condizioni superficiali *Surface conditions*	☐ Sabbiate *Sandblasted*	☐ Lavoraz. meccanica *Machined*	☒ COME SALDATO AS WELDED	
Tipo di liquido *Liquid type*	☒ Solubile in acqua *Water-washable*	☐ Rimov. con solvente *Solvent-removable*	☐ Post emulsionabile *Post-emulsifiable*	
Metodo di rilevazione *Detection mode*	☒ Contrasto di colore *Colour contrast*	☐ Contrasto di luminosita' (luce di wood) *Brilliance contrast (wood light)*		

Procedura d'esame *Examination procedure* ASM V ART. 6	Limiti di accettazione *Acceptance standards* ASME VIII
Liquido detergente *Cleaner* / Temp. *Time* /	Liquido penetrante *Penetrant liquid* PENETRANT DP 51 Temp. *Time* 15 MIN.
Emulsificatore *Emulsifier* / Temp. *Time* /	Rivelatore *Developer* DEVELOPER D100 Temp. *Time* /
Caratteristiche chimiche in accordo con *Chemical analysis in compliance with* ASME sez. V art.6 par. T530 ☒	Temperatura di prova *Testing temperature* (°C) 25 ±

Schizzo zone esaminate
Sketch of tested parts

Risultati *Results*	☒ Conforme *According to*	☐ Non conforme *Not according to*	☐ Scarto *Rejection*

Note
Remarks

1- CONTROLLO ESEGUITO SUL 100% DELLE SALDATURE DI TENUTA

2- RIF. NS. PCQ N° 03/97 FASE 3.4

Operatore *Operator*	Enti Collaudatori *Inspect. officials*	Ispettore cliente *Customer inspect.*	Capo collaudo *Inspect. Department manager*
			Zambetti & Lumina s.r.l. Cont. Qualità II° Livello SNT-TC-IA Walter Spalgatti

MODULO - MD007 Rev.00

OFFICINA CONTI SALDATURA
24019 VERDELLO (BG)
Via Fantoni, 13/A - Zona Ravarolo
Tel. (035) 48.95.38 - Telefax (035) 48.11.90

CERTIFICATO RADIOGRAFICO

Radiographic Certificate

DOSSIER CERTIFIC.VO
Inspection Book

Pag. 1 di 21
Pag. 1 of 21

CLIENTE / Customer: ZAMBETTI & LUMINA
ORDINE / Order: /
COMMESSA CONTI / Conti Job: /

COMPONENTE: TIPO / Component Type:
SIGLA / Item:
N° FABBRICA / Serial no:

CORPO	FONDI	TUBI	BOCCHELLI			DISEGNO / Drawing
						620RM07428

CODICE E SPECIF. APPLICABILE / Applicable Spec. and Code: ASME V - ASME VIII
PROCEDURA D'ESAME / Examinat. Procedure: RT 1

OGGETTO / Object: SCATOLA VALVOLE
MATERIALE / Material: AISI 304

CONDIZIONI D'ESAME - Examination Conditions

SORGENTE: TIPO / Source Type: "X" RAY
PROD. / Prod.: GILARDONI

MACCHIA FOCALE

K e V: 280
Focal Spot Size: 3x3
mA: 6
DIST. FOCALE / Souce to Film Distance: 700
TEMPO ESPOS. / Exposure Time: 1'35"

SCHERMI PIOMBO - Lead Screen

ANT. SP. / Front thk.: 0,10
POST SP. / Back thk.: 0,10

PENETRAMETRO - Penetrameter

TIPO / Type: 6 DIM
☒ LATO SORG. - Source Side
☐ LATO FILM - Film Side

ESPOSIZIONE - Exposure

PARETE-Wall: ☒ SING. - Single ☐ DOPPIA - Double
FILM - Film: ☒ SING. - Single ☐ DOPPIO - Double

TIPI DI DISCONTINUITÀ - Types of Discountinuities

1a	POROSITÀ DISUNIFORME - Scattered Porosity
1b	POROSITÀ A GRAPPOLO - Cluster Porosity
1c	POROSITÀ ALLINEATE - Linear Porosity
1d	POROSITÀ ALLUNGATE (TARLI) - Piping Porosity
2a	INCLUSIONE SCORIA - Slag Inclusion
2b	INCLUSIONE TUNGSTENO - Tungsten Inclusion
3	MANCANZA FUSIONE - Incomplete Fusion
4	MANCANZA DI PENETRAZIONE - lack of penetration
5	INCISIONE MARGINALE - Undercut
6	INCISIONE ALLA RADICE - Shrinkage Groove
12a	CRICCA LONGITUDINALE - Longitudinal Crack
12b	CRICCA TRASVERSALE - Transversal Crack
12c	CRICCA DI CRATERE - Crater Crack
12f	CRICCA DI RADICE - Root Crack
16	CORDONE IRREGOLARE - Weaving Fault
17	SGOCCIOL. 1A PASS. - Excess of Pen. 1st Pass.
18	SLIVELLAMENTO LEMBI - Edges Misalignment
19	ECCESSO DI PENETRAZIONE - Excessive penetration
20	INSELLAMENTO ALLA RADICE - Root Concavity
21	RIPRESA DIFETTOSA - Stop Start Defect

SCHIZZO POSIZIONE FILMS:
Films Position Sketch

Zambetti & Lumina

N.° RER-07/97
C.C.M.I. 7033
DATA 18-06-97
CLIENTE / CUSTOMER: ANSALDO ENERGIA
ORDINE / ORDER: BC 192126
DISEGNO / DRAWING: 620RM07428
CONTROLLATO / CONTROLLED: [signature]

OFFICINA **CONTI** SALDATURA
24049 VERDELLO (BG)
Via Fantoni, 13/A - Zona Ravarolo
Tel. (035) 48.95.38 - Telefax (035) 48.11.90

CERTIFICATO RADIOGRAFICO

Radiographic Certificate

DOSSIER CERTIFIC.VO
Inspection Book

Pag. 2 di
Pag. 2 of

TRATTO Position	SALD.RE Welder	DIMENSIONI Dimensions DIAM. Diam.	Sp. Thk.	FILM TIPO Type	CLASSE Class	TIPO DIFETTO Type of defect	GIUDIZIO Judg.nt	NOTE Remarks
A 1-2	—		25	D7	II		1	
B 1-2	—		25	D7	II		1	
C 1-2	—		25	D7	II		1	
D 1-2	—		25	D7	II		1	

GIUDIZIO - Judgement

1: NESSUN DIFETTO - No Defects
2: DIF.TI ACCETT.LI DAL COD. - By Code Acc.ble Defects
3: DIFETTI DA RIPARARE - Defects to Repair
4: SALDATURA DA SCARTARE - Weld to Reject

ESEGUITO DA Performed by	INTERPRETATO DA Interpreted by	APPROVATO DA Approved by	DATA Date	ISPETTORE CLIENTE Custom. Inspector	ISPETT. AUTORIZZATO Authorized Inspector
Fabio Conti	Fabio Conti ☐ I°LEVEL ☒ II°LEVEL ASNT-CICPND	Fabio Conti ☐ I°LEVEL ☒ II°LEVEL ASNT-CICPND	18/06/97		

ESAME - Examination

033

Zambetti
& Lumina

SEZIONE

SECTION

F

RPR
LT n° 839/001

RAPPORTO DI PROVA
Helium leak test report

COMM GC: *Job* 839 **CLIENTE** *Customer* ZAMBETTI & LUMINA **ORDINE** *Order* 326/97 **COMM:** *Job* 7033

IMPIANTO: *Plant* — **UNITA':** *Unit*

OGGETTO: *Subject:* CAMINO CRIOGENICO RIF. ORD. ANSALDO BC 192126 **ITEM**

PARTI VERIFICATE *Tested parts* SALDATURE E ACCOPPIAMENTI/SPORTELLI - FLANGIA INFERIORE

CODICE: *Code* ASME V ART. 10 APP. V ED. 95 **SPECIFICA** *Specification* ANSALDO 700RM07442 REV. 0 15/01/97 **DIS.:** *Drw* 620RM07433

STRUMENTAZIONE DI PROVA/*Testing equipment*

UNITA' DI CONTROLLO: *Control unit* ALCATEL ASM 120 H **SN:** *sn.* 1088 **SENSIBILITA':** *Sensibility* 1×10^{-9} mbar l/s **TARATURA:** *Calibration* 11/04/97

GRUPPO DI POMPAGGIO: *Pumping System* VARIAN SD-1400 **SN:** *sn* ROOTS 500 **SN:** *sn* TURBO MOL. **SN:** *sn* 1506/M **SN:** *sn* /

MISURATORE DI VUOTO: *Vacuum gauge* EDWARDS 1001 **SN:** *sn* 5733-50-19E **SN:** *sn* PRL 10 **SN:** *sn* D021-58-00 **SN:** *sn* /

VAL.NOM.FUGA CAMP.A PERMEABILITA': *Permeability cal. leak nom. value* 6×10^{-8} **mbar. l/sec** **A** *at* 20 **°C** **TARATURA:** *Calibration* 05/03/97

TEMP. AMBIENTE: *Room temperature* 15 **°C** **COEFF. CORR. TEMPO:** *Time drift* / **%ANNO** *Year* **COEFF. CORR. TEMP. :** ± 3 % **°C** *Thermal drift*

VAL.EFF.FUGA CAMP.A PERMEAB.: *Actual calibrated leak* 5×10^{-8} **mbar. l/sec** **VAL.NOM.FUGA CAMP.CAPILL.:** *Capillary calibrated leak nom. value* / **mbar. l/sec**

CONDIZIONI DI MISURA E DATI OPERATIVI/*Testing condition and work notes*

CONDIZIONI DEL PEZZO *Tested parts conditions*	INTERNA *Internal*	ESTERNA *External*	METODO DI PROVA *Testing method*			
			HOOD ■	GLOBAL ■		
PRESS. ❑ VUOTO ■ *Press. Vacuum*	$1{,}3 \times 10^{-3}$ mbar	A.T.M	PRESS. ❑	JET He ❑		
CONCENTRAZIONE He *He concentration*	/	45%	BOMBING ❑	SNIFFER ❑		
			LOCALIZ. ❑	ACCUMUL. ❑		

TECNICA DI RILEVAZIONE/*Detection tecnique* STATICA/*Static* ■ DINAMICA/*Dynamic* ❑

TEMPO DI RISPOSTA: *Response time* 10 sec. **TEMPO DI ATTESA:** *Detection time* 20 min. **PRESS. TEST PORT:** *Test port pressure* $1{,}3 \times 10^{-3}$ **mbar**

PRESS. ASS. S. MASSA: *M.S. abs. pressure* $< 1 \times 10^{-4}$ **mbar** **F.S IND. FUGA:** *F.S. of leak indication* 10^{-9} **mbar**

VELOCITA' DI SCANSIONE: *Scanning speed* / **DISTANZA DAL PEZZO:** *Work distance* /

RISULTATI/*Result*

LIMITE DI ACCETTABILITA': *Allowable leakage* 1×10^{-7} mbar.l/s GLOBALE ■ *Global* PARZIALE ❑ *Partial*

FUGA INDICATA: *Indicate leak* 3×10^{-9} mbar.l/s **RUMORE DI FONDO: (M2)** *Background* 3×10^{-9} mbar.l/s

FUGA RILEVATA : Q = (M3-M2) *Detected leak* 0 (ZERO) **FUGA CALCOLATA : Q1 = (Q x 100/%He)** *Calculated leak* 0 (ZERO)

CONFORME/ACCEPTABILE ■ **NON CONFORME/NOT ACCEPTABLE** ❑

NOTE/Notes : RIF. QCP N° 09/97 ITEM 3.7

DATA/*Date*	OPERATORE/*Operator*	CLIENTE/*Customer*	ENTI COLLAUDATORI/*Surveyor*	PAGINA/*Page*
26/06/97	GENERALE CONTROLLI FORMENTI GRAZIANO II° LEV. MT. PT UT. MSLT. - ET.	Zambetti & Lumina s.r.l. Cont. Qualità II° Livello SNT-TC-IA Walter Spelgattini		1 di 1

SIMIC

SIMIC SPA
CAMERANA (CN)

Camerana 09-09-97
PROT. 627/97

Spett.le ANSALDO ENERGIA
GENOVA

alla c.a. Sig. Valente

Oggetto: Vs. ordine N° BC 180846
ordine N° BC 190075

In allegato Vi trasmettiamo documentazione finale relativa agli ordini in oggetto.

cordiali saluti

SIMIC s.p.a.
IMPIANTI INDUSTRIALI
12072 CAMERANA (CUNEO)

SIMIC s.p.a.
CAMERANA (CN)

DOCUMENTATION

ORDER NR. BC 180846

CRIOSTATO

COMM:F10004EM

SIMIC s.p.a.
IMPIANTI INDUSTRIALI
12072 CAMERANA (CUNEO)

SIMIC s.p.a.
CAMERANA (CN)

PIANO FABRICAZIONE CONTROLLO
MANUFACTORI AND CONTROL PLAN

Com. 16179

Ansaldo Energia s.p.a. GENOVA (ITALIA)	ANSALDO TELEFAX N° ++ 39 10 6556485	Data: 14/01/97 date: N. fax:PMA/7.016/PV Fogli n. : 4 Pages no. :
DESTINATARIO *TO*	Societa' : SIMIC Company Sig. : Biestro c.c. Ginola Fax n. : 0174/96309 Fax no.	
MITTENTE *FROM*	Sig. : P. VALENTE Mr. Ufficio : PMA/CRSP Office Tel. n. : 010/6556722 Phone No.	
OGGETTO *SUBJECT*	CRIOSTATO BaBar Piano di fabbricazione e controllo	
	Le invio il PFC approvato dal ns. ente qualità. Per le convocazioni dei controlli e quant'altro relativo alla qualità vogliate riferirvi sempre al ns. ente qualità (cfr. fax n. PMA/6.780/PV), mandando per conoscenza copia al sottoscritto. Distinti saluti P. Valente	

SIMIC SPA CAMERANA (CN)	MANUFACTORIG AND CONTROL PLAN	JOB: 16179

CLIENT: ANSALDO ENERGIA	JOB ANSALDO: 0004EM	DESCRIPTION : CRYOSTAT	PAG. 2 OF 3
ORDER: BC180846	PFC N° 16179/1/96 REV.2	DWG: 620RM07242	

PHASE	material / components or work phase to be inspectionede	inspection and test kind	applied rules / approval	shape list S	1	2	3	customer insp. locus	certif.n° / date	A	NOTE
01	MATERIAL IDENTIFICATION END CERTIFICATE CHECK		ASTM B 209 / UNI 7323	H				A 19 GE	ANSALDO QUALITA' Parodi Enzo	2	13/2/87
02	WPS - PQR - WPQ - WELD MAP VERIFICATION		ASME IX	H	A			A 19 GE	ANSALDO QUALITA' Parodi Enzo		13/2/87
03	NDT OPERATORS CHECK		ASNT-TC-1A	H				A 19 GE	ANSALDO QUALITA' Parodi Enzo	4	13/2/87
04	MARKING MATERIALS		OM 006	H				A 19 GE	ANSALDO QUALITA' Parodi Enzo		13/2/87
05	CUTTING AND BEVELING PLATES THK 50 AND 10 MM.	VISUAL TEST	07759	H				A 19 GE	ANSALDO QUALITA' Parodi Enzo		13/2/87
06	BENDING PLATES THK.10,35,50 MM		07759	H							
07	VISUAL AND DIMENTIONAL CHECK ROLLER PLATES		07759	H				A 19 GE	ANSALDO QUALITA' Parodi Enzo		13/02/87
08	ROLLER PLATES WELDING		WPS	H				A 19 GE	ANSALDO QUALITA' Parodi Enzo		
09	CUTTING AND BEVELING PLATES FOR FLANGES	VISUAL TEST	07759	H				A 19 GE	ANSALDO QUALITA' Parodi Enzo		13/2/87
10	WELDING FLANGES		WPS	H				A 19 GE	ANSALDO QUALITA' Parodi Enzo		
11	VISUAL CHECK OF WELDS 100%		ASME V ART 9	H	W			A 19 GE	ANSALDO QUALITA' Parodi Enzo	3	
12	PENETRANTS TEST OF WELDS 100%		ASME V ART.6 / ASME "II" DIV.2	H	W			27/2/87	05/03/87		01/LP/04 / 02/LP/05 / 03/LP/06
13	RT EXAMINATION BUTT-WELDS		ASME V ART.2 / ASME "II" DIV.2	H	W	10/4/87		A 19 GE	ANSALDO QUALITA' Parodi Enzo	3	16179/11
14	BEVELING AND TAPERING ROLLER PLATES THK 35 AND 50 MM.		DWG	H				A 19 GE	ANSALDO QUALITA' Parodi Enzo		03/3/87
15	VISUAL AND DIMENSIONAL CHECK		DWG	H				A 19 GE	ANSALDO QUALITA' Parodi Enzo	3	
16	DRILLING FOR PIPE EXTERNAL SHELL		DWG	H							
17	WELDING PIPE ON EXTERNAL SHELL		WPS	H							
18	PENETRANTS TEST OF WELDS ON PIPES		ASME V ART.6 / ASME IIIV DIV.2	H	W	10/04/87		A 19 GE	ANSALDO QUALITA' Parodi Enzo	3	—
19	ASSEMBLY EXTERNAL AND INTERNAL SHELLS		DWG	H	W			A 19 GE	ANSALDO QUALITA' Parodi Enzo		03/03/87

H = HOLD POINT
W = WHITHNESS POINT
R = REVIEW
A = APPROVAL BEFORE TO WELDING

SHAPE LIST : 1 ANSALDO ENERGIA
2 .....
3 .....

A = CUSTOMER CERTIFICATE
A1 CONFORMITY CERTIFICATE
A2 ORIGINAL CERTIFICATE
A3 TEST REPORT
A4 QUALIFICATION REPORT

SIMIC s.p.a.
IMPIANTI INDUSTRIALI
12072 CAMERANA (CUNEO)

SIMIC SPA CAMERANA (CN)	MANUFACTORIG AND CONTROL PLAN	JOB: 16179

CLIENT: ANSALDO ENERGIA	JOB ANSALDO: 0004EM	DESCRIPTION : CRYOSTAT	PAG. 3 OF 3
ORDER: BC188846	PFC N° 16179/1/96 REV.2	DWG: 620RM07242	

PHASE	material / components or work phase to be inspectionede	inspection and test kind	applied rules approval	shape list $	1	2	3	customer insp. locus	certif.n° date	A	NOTE
20	MACHINING INTERNAL AND EXTERNAL SHELLS		DWG	H							
21	CUTTING PLATES FOR STACK		DWG	H							
22	ASSEMBLY AND WELDING STACK		WPS	H							
23	VISUAL CHECK WELDING STACK		DWG	H							
24	PENETRANT TEST WELDING STACK		ASME V ART.6 ASME VIII DIV.2	H						3	
25	MACHINING STACK		DWG	H						3	
26	MACHINING FLANGE DWG 620RM07247 SH 1/2		DWG	H						3	
27	ASSEMBLY STACK AND WELDING ON FLANGE DWG 620RM07247 SH 1/2		DWG	H							
28	MACHINING INTERNAL SIDE ON THE FLANGE. DWG 620RM07247 SH 1/2		DWG	H						3	
29	MACHINING FLANGE DWG 620RM07247 SH 2/2		DWG	H						3	
30	ASSEMBLY FLANGES ON JACKET		DWG	H							
31	DIMENSIONAL CHECK	VISUAL TEST	DWG	H	W			ANSALDO QUALITA' Parodi Enzo		3	
32	CLEANING + Prot.	SIMIC	700 RM 07229	H						1	
33	VACUUM TEST		ASME V ART.10 700 RM 07229	H	H					3	
34	FINAL TEST		700 RM 07229	H	H					3	
35	FINAL DOCUMENTATION			H	H					3	
36	SETUP OF SHIPMENT			H							
37											
38											

H = HOLD POINT
W = WHITNESS POINT
R = REVIEW
A = APPROVAL BEFORE TO WELDING

SHAPE LIST : 1 ANSALDO ENERGIA
2 .....
3 .....

A = CUSTOMER CERTIFICATE
A1 CONFORMITY CERTIFICATE
A2 ORIGINAL CERTIFICATE
A3 TEST REPORT
A4 QUALIFICATION REPORT

SIMIC s.p.a.
IMPIANTI INDUSTRIALI
12072 CAMERANA (CUNEO)

SIMIC S.P.A.
CAMERANA (CN)

CND
NDT

SIMIC S.P.A. CAMERANA (CN)	RT EXAMINATION BUTT-WELDS AND WELDS FLANGES	DOC.No. doc.No. 16179-11-97
		DATA. date. 10-04-97

CLIENTE : ANSALDO
ORDINE : BC 180846
OGGETTO : CRIOSTATO - CRIOSTAT
PAFTICOLARE: VIROLA ESTERNA - EXTERNAL SHELL RADIOGRAPHIC REPORT N°14 AND N°15
DISEGNO : 620RM07245

CLIENTE : ANSALDO
ORDINE : BC 180846
OGGETTO : CRIOSTATO - CRIOSTAT
PAFTICOLARE: VIROLA INTERNA - INTERNAL SHELL RADIOGRAPHIC REPORT N°16 AND N°17 AND N°18
DISEGNO : 620RM07246

CLIENTE : ANSALDO
ORDINE : BC 180846
OGGETTO : CRIOSTATO - CRIOSTAT
PAFTICOLARE: FLANGE - FLANGES RADIOGRAPHIC REPORT N°21 AND N°22
DISEGNO : 620RM07247

PFC 16179/1/96 rev 2 FASE 13
QCP 16179/1/96 rev 2 PHASE 13

SIMIC s.p.a.
CDI
ROBALDO PAOLO

ANSALDO QUALITA' GE Parodi Enzo
10/04/97

SIMIC.SPA
CAMERANA (CN)

CONTROLLO CON LIQUIDI PENETRANTI
LIQUID PENETRANT EXAMINATION REPORT

DOC.No.
doc.No.16179/04/LP

FOGLIO
sheet 1/1

COMM.ANSALDO
job.ANSALDO

F10004EM

CLIENTE
Purchaser: ANSALDO ENERGIA

ORDINE
P.O. Nr.: BC 180846

APPARECCHIO
Vessel: CRIOSTATO
CRYOSTAT

SIGLA
Item: 620RM07246

COLLAUDO
Inspection

OGGETTO
Object: VIROLA INTERNA P.T. SALDATURE DI COMPOSIZIONE
INTERNAL SHELL P.T. ASSEMBLY WELDS

Extension
100 %

STADIO DI LAVORAZIONE
Fabrication step: COME SALDATO
AS WELDED

SPECIFICA DI CONTROLLO
Examinatio procedure:
ASME 5 ART 6
ASME 8 DIS 2 ART 9.2

CONDIZIONI SUPERFICIALI
Test surface status

COME SALDATO
As welded [X]

MOLATO
Ground [ ]

LAVORATO DI MACCHINA
Machined [ ]

COMBINAZ. LIQUIDI PENETRANTI liquid penetrant grouping	LAVABILE IN ACQUA water washable VISIBILE visible [X]	FLUOR. fluoresc. [ ]	LAVABILE CON SOLVENTE solvent removable VISIBILE visible [ ]	FLUOR. fluoresc. [ ]	POST EMULSIFICABILE post emulsified VISIBILE visible [ ]	FLUOR. fluoresc. [ ]
PULITORE Cleaner	VELNET					
PENETRANTE Penetrant	RED W W					
EMULSIFICATORE Emulsifier	/					
SOLVENTE Remover	/					
RIVELATORE Developper	WHITE W					
LUNGH.ONDA LUCE Light wave lenght	/					
MARCA Trade-mark	CGM					

PROCEDURA DI CONTROLLO
Examination sequence

PULITURA CON Cleaning by	VELNET	
APPLICAZIONE PENETRANTE CON Penetrant application by	SPRAY	
TEMPO MIN. DI PENETRAZIONE Penetrant minimum time	15	MINUTI minutes
APPLICAZIONE EMULSIF. CON Emulsifier application by	/	
RIMOZIONE PENETRANTE CON Penetrant removal by	WATER	
APPLICAZIONE RIVELATORE Developper Application	SPRAY	
ESSICAZIONE CON Drying process by	AIR	
TEMPO MIN. DI SVILUPPO Developing minimum time	15	MINUTI minutes
TEMPO MAX. DI LETTURA Checking maximum time	30	MINUTI minutes

SCHIZZO
Sketch

PFC 16179 FASE 12

QCP 16179 PHASE 12

RISULTATI DELL'ESAME
Examination result: SATISFATORY

DATA/date
27/02/97

level 1

SIMIC.SPA
SIMIC s.p.a.
CDI
ROBALDO PAOLO
level 2-3

COLLAUDATORI/INSPECTORS
ANSALDO QUALITA'
Parodi Enzo

SIMIC.SPA
CAMERANA (CN)

CONTROLLO CON LIQUIDI PENETRANTI
LIQUID PENETRANT EXAMINATION REPORT

DOC.No.
doc.No.16179/05/LP

FOGLIO
sheet 1/1

COMM.ANSALDO
job.ANSALDO

F10004EM

CLIENTE
Purchaser: ANSALDO ENERGIA

ORDINE
P.O. Nr.: BC 180846

APPARECCHIO
Vessel: CRIOSTATO / CRYOSTAT

SIGLA
Item: 620RM07245

COLLAUDO
Inspection

OGGETTO
Object: VIROLA ESTERNA / EXTERNAL SHELL — P.T. SALDATURE DI COMPOSIZIONE / P.T. ASSEMBLY WELDS

Extension: 100 %

STADIO DI LAVORAZIONE
Fabrication step: COME SALDATO / AS WELDED

SPECIFICA DI CONTROLLO
Examinatio procedure: ASME 5 ART 6 / ASME 8 DIS 2 ART 9.2

CONDIZIONI SUPERFICIALI
Test surface status: COME SALDATO / As welded [X] — MOLATO / Ground [ ] — LAVORATO DI MACCHINA / Machined [ ]

COMBINAZ. LIQUIDI PENETRANTI liquid penetrant grouping	LAVABILE IN ACQUA water washable VISIBILE visible [X]	FLUOR. fluoresc. [ ]	LAVABILE CON SOLVENTE solvent removable VISIBILE visible [ ]	FLUOR. fluoresc. [ ]	POST EMULSIFICABILE post emulsified VISIBILE visible [ ]	FLUOR. fluoresc. [ ]
PULITORE Cleaner	VELNET					
PENETRANTE Penetrant	RED W					
EMULSIFICATORE Emulsifier	/					
SOLVENTE Remover	/					
RIVELATORE Developper	WHITE W					
LUNGH.ONDA LUCE Light wave lenght	/					
MARCA Trade-mark	CGM					

PROCEDURA DI CONTROLLO
Examination sequence

PULITURA CON Cleaning by	VELNET	
APPLICAZIONE PENETRANTE CON Penetrant application by	SPRAY	
TEMPO MIN. DI PENETRAZIONE Penetrant minimum time	15	MINUTI minutes
APPLICAZIONE EMULSIF. CON Emulsifier application by	/	
RIMOZIONE PENETRANTE CON Penetrant removal by	WATER	
APPLICAZIONE RIVELATORE Developper Application	SPRAY	
ESSICAZIONE CON Drying process by	AIR	
TEMPO MIN. DI SVILUPPO Developing minimum time	15	MINUTI minutes
TEMPO MAX. DI LETTURA Checking maximum time	30	MINUTI minutes

SCHIZZO
Sketch

PFC 16179 FASE 12

QCP 16179 PHASE 12

RISULTATI DELL'ESAME
Examination result: SATISFATORY

DATA/date: 28/02/97

SIMIC.SPA

level 1

level 2-3

SIMIC s.p.a. CDI ROBALDO PAOLO

COLLAUDATORI/INSPECTORS

ANSALDO QUALITA' GE Parodi Enzo

SIMIC.SPA
CAMERANA (CN)

CONTROLLO CON LIQUIDI PENETRANTI
LIQUID PENETRANT EXAMINATION REPORT

DOC.No.
doc.No.16179/06/LP

FOGLIO
sheet 1/1

COMM.ANSALDO
job.ANSALDO

F10004EM

CLIENTE / Purchaser: ANSALDO ENERGIA

ORDINE / P.O. Nr.: BC 180846

APPARECCHIO / Vessel: CRIOSTATO — SIGLA / Item: 620RM07247 FG 1/2 — 2/2

COLLAUDO / Inspection

OGGETTO / Object: FLANGIA USCITA ELETTRICA / FLANGES/E LATO OPPOSTO — P.T. SALDATURE DI COMPOSIZIONE / P.T. ASSEMBLY WELDS

Extension: 100 %

STADIO DI LAVORAZIONE / Fabrication step: COME SALDATO / AS WELDED

SPECIFICA DI CONTROLLO / Examinatio procedure: ASME 5 ART 6 / ASME 8 DIS 2 ART 9.2

CONDIZIONI SUPERFICIALI / Test surface status: COME SALDATO / As welded [X] — MOLATO / Ground [ ] — LAVORATO DI MACCHINA / Machined [ ]

COMBINAZ. LIQUIDI PENETRANTI / liquid penetrant grouping	LAVABILE IN ACQUA / water washable: VISIBILE / visible [X]	FLUOR. / fluoresc. [ ]	LAVABILE CON SOLVENTE / solvent removable: VISIBILE / visible [ ]	FLUOR. / fluoresc. [ ]	POST EMULSIFICABILE / post emulsified: VISIBILE / visible [ ]	FLUOR. / fluoresc. [ ]
PULITORE / Cleaner	VELNET					
PENETRANTE / Penetrant	RED W W					
EMULSIFICATORE / Emulsifier	/					
SOLVENTE / Remover	/					
RIVELATORE / Developper	WHITE W					
LUNGH.ONDA LUCE / Light wave lenght	/					
MARCA / Trade-mark	CGM					

PROCEDURA DI CONTROLLO / Examination sequence

PULITURA CON / Cleaning by	VELNET	
APPLICAZIONE PENETRANTE CON / Penetrant application by	SPRAY	
TEMPO MIN. DI PENETRAZIONE / Penetrant minimum time	15	MINUTI / minutes
APPLICAZIONE EMULSIF. CON / Emulsifier application by	/	
RIMOZIONE PENETRANTE CON / Penetrant removal by	WATER	
APPLICAZIONE RIVELATORE / Developper Application	SPRAY	
ESSICAZIONE CON / Drying process by	AIR	
TEMPO MIN. DI SVILUPPO / Developing minimum time	15	MINUTI / minutes
TEMPO MAX. DI LETTURA / Checking maximum time	30	MINUTI / minutes

SCHIZZO / Sketch

PFC 16179 FASE 12

QCP 16179 PHASE 12

RISULTATI DELL'ESAME / Examination result: SATISFATORY

DATA/date: 03/03/97

SIMIC.SPA

level 1

level 2-3

SIMIC s.p.a. CDI ROBALDO PAOLO

COLLAUDATORI/INSPECTORS

ANSALDO QUANTA' Parodi Enzo

SIMIC.SPA
CAMERANA (CN)

CONTROLLO CON LIQUIDI PENETRANTI
LIQUID PENETRANT EXAMINATION REPORT

DOC.No.
doc.No.16179/03/LP

FOGLIO
sheet 1/1

COMM.ANSALDO
job.ANSALDO

F10004EM

CLIENTE
Purchaser: ANSALDO ENERGIA

ORDINE
P.O. Nr.: BC 180846

APPARECCHIO
Vessel: CRIOSTATO

SIGLA
Item: 620RM07247 FG 1/2 2/2

COLLAUDO
Inspection

OGGETTO
Object: FLANGIA USCITA ELETTRICA FLANGES/E LATO OPPOSTO P.T. CIANFRINI SALDATURA P.T. WELDS CHANFERING

Extension 100 %

STADIO DI LAVORAZIONE
Fabrication step: DOPO LAVORAZIONE MECCANICA AFTER MACHINING

SPECIFICA DI CONTROLLO
Examinatio procedure: ASME 5 ART 6
ASME 8 DIS 2 ART 9.2

CONDIZIONI SUPERFICIALI
Test surface status

COME SALDATO
As welded [ ]

MOLATO
Ground [ ]

LAVORATO DI MACCHINA
Machined [X]

COMBINAZ. LIQUIDI PENETRANTI liquid penetrant grouping	LAVABILE IN ACQUA water washable VISIBILE visible [X]	FLUOR. fluoresc. [ ]	LAVABILE CON SOLVENTE solvent removable VISIBILE visible [ ]	FLUOR. fluoresc. [ ]	POST EMULSIFICABILE post emulsified VISIBILE visible [ ]	FLUOR. fluoresc. [ ]
PULITORE Cleaner	VELNET					
PENETRANTE Penetrant	RED W W					
EMULSIFICATORE Emulsifier	/					
SOLVENTE Remover	/					
RIVELATORE Developper	WHITE W					
LUNGH.ONDA LUCE Light wave lenght	/					
MARCA Trade-mark	CGM					

PROCEDURA DI CONTROLLO
Examination sequence

PULITURA CON Cleaning by	VELNET	
APPLICAZIONE PENETRANTE CON Penetrant application by	SPRAY	
TEMPO MIN. DI PENETRAZIONE Penetrant minimum time	15	MINUTI minutes
APPLICAZIONE EMULSIF. CON Emulsifier application by	/	
RIMOZIONE PENETRANTE CON Penetrant removal by	WATER	
APPLICAZIONE RIVELATORE Developper Application	SPRAY	
ESSICAZIONE CON Drying process by	AIR	
TEMPO MIN. DI SVILUPPO Developing minimum time	15	MINUTI minutes
TEMPO MAX. DI LETTURA Checking maximum time	30	MINUTI minutes

SCHIZZO
Sketch

PFC 16179 FASE 12

QCP 16179 PHASE 12

RISULTATI DELL'ESAME
Examination result: SATISFATORY

DATA/date
31/01/97

level 1

SIMIC.SPA
SIMIC s.p.a.
CDI
ROBALDO PAOLO
level 2-3

COLLAUDATORI/INSPECTORS
ANSALDO QUALITA'
GE
Paroni Anzo

SIMIC.SPA
CAMERANA (CN)

CONTROLLO CON LIQUIDI PENETRANTI
LIQUID PENETRANT EXAMINATION REPORT

DOC.No.
doc.No.16179/02/LP

FOGLIO
sheet 1/1

COMM.ANSALDO
job.ANSALDO

F10004EM

CLIENTE
Purchaser: ANSALDO ENERGIA

ORDINE
P.O. Nr.: BC 180846

APPARECCHIO
Vessel: CRIOSTATO

SIGLA
Item: 620RM07245

COLLAUDO
Inspection

OGGETTO
Object: VIROLA ESTERMA / EXTERNAL SHELL — P.T. CIANFRINI SALDATURA / P.T. WELDS CHANFERING

Extension: 100 %

STADIO DI LAVORAZIONE
Fabrication step: DOPO LAVORAZIONE MECCANICA / AFTER MACHINING

SPECIFICA DI CONTROLLO
Examinatio procedure:
ASME 5 ART 6
ASME 8 DIS 2 ART 9.2

CONDIZIONI SUPERFICIALI
Test surface status:
- COME SALDATO / As welded [ ]
- MOLATO / Ground [ ]
- LAVORATO DI MACCHINA / Machined [X]

COMBINAZ. LIQUIDI PENETRANTI / liquid penetrant grouping	LAVABILE IN ACQUA / water washable — VISIBILE / visible [X]	LAVABILE IN ACQUA — FLUOR. / fluoresc. [ ]	LAVABILE CON SOLVENTE / solvent removable — VISIBILE / visible [ ]	LAVABILE CON SOLVENTE — FLUOR. / fluoresc. [ ]	POST EMULSIFICABILE / post emulsified — VISIBILE / visible [ ]	POST EMULSIFICABILE — FLUOR. / fluoresc. [ ]
PULITORE / Cleaner	VELNET					
PENETRANTE / Penetrant	RED W					
EMULSIFICATORE / Emulsifier	/					
SOLVENTE / Remover	/					
RIVELATORE / Developper	WHITE W					
LUNGH.ONDA LUCE / Light wave lenght	/					
MARCA / Trade-mark	CGM					

PROCEDURA DI CONTROLLO
Examination sequence

PULITURA CON / Cleaning by	VELNET	
APPLICAZIONE PENETRANTE CON / Penetrant application by	SPRAY	
TEMPO MIN. DI PENETRAZIONE / Penetrant minimum time	15	MINUTI / minutes
APPLICAZIONE EMULSIF. CON / Emulsifier application by	/	
RIMOZIONE PENETRANTE CON / Penetrant removal by	WATER	
APPLICAZIONE RIVELATORE / Developper Application	SPRAY	
ESSICAZIONE CON / Drying process by	AIR	
TEMPO MIN. DI SVILUPPO / Developing minimum time	15	MINUTI / minutes
TEMPO MAX. DI LETTURA / Checking maximum time	30	MINUTI / minutes

SCHIZZO
Sketch

PFC 16179 FASE 12

QCP 16179 PHASE 12

RISULTATI DELL'ESAME
Examination result: SATISFATORY

DATA/date: 31/01/97

SIMIC.SPA
level 1
level 2-3 SIMIC s.p.a. CDI ROBALDO PAOLO

COLLAUDATORI/INSPECTORS
ANSALDO QUALITA' GE
Parodi Enzo

SIMIC.SPA
CAMERANA (CN)

CONTROLLO CON LIQUIDI PENETRANTI
LIQUID PENETRANT EXAMINATION REPORT

DOC.No.
doc.No.16179/01/LP

FOGLIO
sheet 1/1

COMM.ANSALDO
job.ANSALDO

F10004EM

CLIENTE
Purchaser: ANSALDO ENERGIA

ORDINE
P.O. Nr.: BC 180846

APPARECCHIO
Vessel: CRIOSTATO

SIGLA
Item: 620RM07246

COLLAUDO
Inspection

OGGETTO
Object: VIROLA INTERNA / INTERNAL SHELL — P.T. CIANFRINI SALDATURA / P.T. WELDS CHANFERING

Extension: 100 %

STADIO DI LAVORAZIONE
Fabrication step: DOPO LAVORAZIONE MECCANICA / AFTER MACHINING

SPECIFICA DI CONTROLLO
Examinatio procedure: ASME 5 ART 6 / ASME 8 DIS 2 ART 9.2

CONDIZIONI SUPERFICIALI
Test surface status: COME SALDATO / As welded [ ] MOLATO / Ground [ ] LAVORATO DI MACCHINA / Machined [X]

COMBINAZ. LIQUIDI PENETRANTI liquid penetrant grouping	LAVABILE IN ACQUA water washable VISIBILE visible [X]	FLUOR. fluoresc. [ ]	LAVABILE CON SOLVENTE solvent removable VISIBILE visible [ ]	FLUOR. fluoresc. [ ]	POST EMULSIFICABILE post emulsified VISIBILE visible [ ]	FLUOR. fluoresc. [ ]
PULITORE Cleaner	VELNET					
PENETRANTE Penetrant	RED W					
EMULSIFICATORE Emulsifier	/					
SOLVENTE Remover	/					
RIVELATORE Developper	WHITE W					
LUNGH.ONDA LUCE Light wave lenght	/					
MARCA Trade-mark	CGM					

PROCEDURA DI CONTROLLO
Examination sequence

PULITURA CON Cleaning by	VELNET	
APPLICAZIONE PENETRANTE CON Penetrant application by	SPRAY	
TEMPO MIN. DI PENETRAZIONE Penetrant minimum time	15	MINUTI minutes
APPLICAZIONE EMULSIF. CON Emulsifier application by	/	
RIMOZIONE PENETRANTE CON Penetrant removal by	WATER	
APPLICAZIONE RIVELATORE Developper Application	SPRAY	
ESSICAZIONE CON Drying process by	AIR	
TEMPO MIN. DI SVILUPPO Developing minimum time	15	MINUTI minutes
TEMPO MAX. DI LETTURA Checking maximum time	30	MINUTI minutes

SCHIZZO
Sketch

PFC 16179 FASE 12

QCP 16179 PHASE 12

RISULTATI DELL'ESAME
Examination result: SATISFATORY

DATA/date: 30/01/97

SIMIC.SPA

level 1

level 2-3

SIMIC s.p.a. CDI ROBALDO PAOLO

COLLAUDATORI/INSPECTORS

ANSALDO QUALITA' GE 19 Parodi Enzo

SIMIC s.p.a.
CAMERANA (CN)

CONTROLLO CON LIQUIDI PENETRANTI
LIQUID PENETRANT EXAMINATION REPORT

DOC.No.
doc.No.16179/08/LP

FOGLIO
sheet 1/1

CLIENTE Purchaser	ANSALDO ENERGIA (CRIOSTATO)	COLLAUDO Inspection	COMM.ANSALDO job.ANSALDO
ORDINE P.O. Nr.	BC 190075		
APPARECCHIO Vessel	CAMINO STACK	SIGLA 620RM07253 Item	N° 01 PZ F10004EM

OGGETTO Object	L.P SALDATURE DI COMPOSIZIONE P.T ASSEBLI WELDES OF STACK
Extension	100 %
STADIO DI LAVORAZIONE Fabrication step	DOPO LAVORAZIONE MECCANICA AFTER MACHINING
SPECIFICA DI CONTROLLO Examinatio procedure	ASME 5 ART 6 ASME 8 DIS 2 ART 9.2
CONDIZIONI SUPERFICIALI Test surface status	COME SALDATO / As welded ☐ MOLATO / Ground ☐ LAVORATO DI MACCHINA / Machined [X]

COMBINAZ. LIQUIDI PENETRANTI liquid penetrant grouping	LAVABILE IN ACQUA water washable VISIBILE visible [X]	FLUOR. fluoresc. ☐	LAVABILE CON SOLVENTE solvent removable VISIBILE visible ☐	FLUOR. fluoresc. ☐	POST EMULSIFICABILE post emulsified VISIBILE visible ☐	FLUOR. fluoresc. ☐
PULITORE Cleaner	VELNET					
PENETRANTE Penetrant	RED W W					
EMULSIFICATORE Emulsifier	/					
SOLVENTE Remover	/					
RIVELATORE Developper	WHITE W					
LUNGH.ONDA LUCE Light wave lenght	/					
MARCA Trade-mark	CGM					

PROCEDURA DI CONTROLLO
Examination sequence

PULITURA CON Cleaning by	VELNET	
APPLICAZIONE PENETRANTE CON Penetrant application by	SPRAY	
TEMPO MIN. DI PENETRAZIONE Penetrant minimum time	15	MINUTI minutes
APPLICAZIONE EMULSIF. CON Emulsifier application by	/	
RIMOZIONE PENETRANTE CON Penetrant removal by	WATER	
APPLICAZIONE RIVELATORE Developper Application	SPRAY	
ESSICAZIONE CON Drying process by	AIR	
TEMPO MIN. DI SVILUPPO Developing minimum time	15	MINUTI minutes
TEMPO MAX. DI LETTURA Checking maximum time	30	MINUTI minutes

SCHIZZO
Sketch

PFC: 16179 FASE 24
QCP: 16179 PHASE 24

RISULTATI DELL'ESAME
Examination result SATISFATORY

DATA/date		SIMIC.s.p.a.	COLLAUDATORI/INSPECTORS
24/03/97	level 1	level 2-3 SIMIC s.p.a. CDI ROBALDO PAOLO	

SIMIC s.p.a.
CAMERANA (CN)

CONTROLLO CON LIQUIDI PENETRANTI
LIQUID PENETRANT EXAMINATION REPORT

DOC.No.
doc.No.16179/09/LP

FOGLIO
sheet 1/1

COMM.ANSALDO
job.ANSALDO F10004EM

CLIENTE Purchaser	ANSALDO ENERGIA	COLLAUDO Inspection	
ORDINE P.O. Nr.	BC 190075		
APPARECCHIO Vessel	CRIOSTATO CRIOSTAT	SIGLA 620RM07248 Item	N° 16 PZ

OGGETTO Object	L.P SALDATURE TIRANTI TANGENZIALI VIROLA ESTERNA PENETRANT TEST OF WELDS PN PIPES
Extension	100 %
STADIO DI LAVORAZIONE Fabrication step	COME SALDATO AS WELDED
SPECIFICA DI CONTROLLO Examinatio procedure	ASME 5 ART 6 ASME 8 DIS 2 ART 9.2
CONDIZIONI SUPERFICIALI Test surface status	COME SALDATO As welded [X] MOLATO Ground [ ] LAVORATO DI MACCHINA Machined [ ]

COMBINAZ. LIQUIDI PENETRANTI liquid penetrant grouping	LAVABILE IN ACQUA water washable VISIBILE visible [X]	FLUOR. fluoresc. [ ]	LAVABILE CON SOLVENTE solvent removable VISIBILE visible [ ]	FLUOR. fluoresc. [ ]	POST EMULSIFICABILE post emulsified VISIBILE visible [ ]	FLUOR. fluoresc. [ ]
PULITORE Cleaner	VELNET					
PENETRANTE Penetrant	RED W W					
EMULSIFICATORE Emulsifier	/					
SOLVENTE Remover	/					
RIVELATORE Developper	WHITE W					
LUNGH.ONDA LUCE Light wave lenght	/					
MARCA Trade-mark	CGM					

PROCEDURA DI CONTROLLO
Examination sequence

PULITURA CON Cleaning by	VELNET	
APPLICAZIONE PENETRANTE CON Penetrant application by	SPRAY	
TEMPO MIN. DI PENETRAZIONE Penetrant minimum time	15	MINUTI minutes
APPLICAZIONE EMULSIF. CON Emulsifier application by	/	
RIMOZIONE PENETRANTE CON Penetrant removal by	WATER	
APPLICAZIONE RIVELATORE Developper Application	SPRAY	
ESSICAZIONE CON Drying process by	AIR	
TEMPO MIN. DI SVILUPPO Developing minimum time	15	MINUTI minutes
TEMPO MAX. DI LETTURA Checking maximum time	30	MINUTI minutes

SCHIZZO
Sketch

PFC 16179 FASE 18

QCP 16179 PHASE 18

RISULTATI DELL'ESAME
Examination result SATISFATORY

DATA/date		SIMIC.s.p.a.	COLLAUDATORI/INSPECTORS
07/04/97	level 1	level 2-3 SIMIC s.p.a. CDI ROBALDO PAOLO	

SIMIC s.p.a.
CAMERANA (CN)

CONTROLLO CON LIQUIDI PENETRANTI
LIQUID PENETRANT EXAMINATION REPORT

DOC.No.
doc.No.16179/07/LP

FOGLIO
sheet 1/1

CLIENTE Purchaser	ANSALDO ENERGIA	COLLAUDO Inspection	COMM.ANSALDO job.ANSALDO
ORDINE P.O. Nr.	BC 190075		
APPARECCHIO Vessel	CRIOSTATO CRYOSTAT — SIGLA 640RMO7248 Item	N° 16 PZ	F10004EM

OGGETTO Object	TIRANTI TANGENZIALI P.T. SALDATURA DI COMPOSIZIONE TANGENTIAL TIES P.T. ASSEMBLY WELDS	Extension 100 %
STADIO DI LAVORAZIONE Fabrication step	DOPO LAVORAZIONE MECCANICA AFTER MACHINING	
SPECIFICA DI CONTROLLO Examinatio procedure	CONDIZIONI SUPERFICIALI Test surface status	COME SALDATO As welded ☐ MOLATO Ground ☐
ASME 5 ART 6 ASME 8 DIS 2 ART 9.2	LAVORATO DI MACCHINA Machined ☒	

COMBINAZ. LIQUIDI PENETRANTI liquid penetrant grouping	LAVABILE IN ACQUA water washable VISIBILE visible ☒	FLUOR. fluoresc. ☐	LAVABILE CON SOLVENTE solvent removable VISIBILE visible ☐	FLUOR. fluoresc. ☐	POST EMULSIFICABILE post emulsified VISIBILE visible ☐	FLUOR. fluoresc. ☐
PULITORE Cleaner	VELNET					
PENETRANTE Penetrant	RED W					
EMULSIFICATORE Emulsifier	/					
SOLVENTE Remover	/					
RIVELATORE Developper	WHITE W					
LUNGH.ONDA LUCE Light wave lenght	/					
MARCA Trade-mark	CGM					

PROCEDURA DI CONTROLLO
Examination sequence

PULITURA CON Cleaning by	VELNET	
APPLICAZIONE PENETRANTE CON Penetrant application by	SPRAY	
TEMPO MIN. DI PENETRAZIONE Penetrant minimum time	15	MINUTI minutes
APPLICAZIONE EMULSIF. CON Emulsifier application by	/	
RIMOZIONE PENETRANTE CON Penetrant removal by	WATER	
APPLICAZIONE RIVELATORE Developper Application	SPRAY	
ESSICAZIONE CON Drying process by	AIR	
TEMPO MIN. DI SVILUPPO Developing minimum time	15	MINUTI minutes
TEMPO MAX. DI LETTURA Checking maximum time	30	MINUTI minutes

SCHIZZO
Sketch

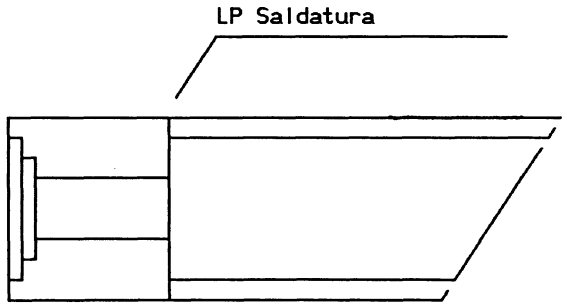

PFC 16179 FASE 18
QEP 16179 PHASE 18

RISULTATI DELL'ESAME
Examination result SATISFATORY

DATA/date		SIMIC.s.p.a.	COLLAUDATORI/INSPECTORS
01/04/97	level 1	level 2-3 SIMIC s.p.a. CDI ROBALDO PAOLO	

SIMIC s.p.a.
CAMERANA (CN)

CONTROLLO CON LIQUIDI PENETRANTI
LIQUID PENETRANT EXAMINATION REPORT

DOC.No.
doc.No.16179/10/LP

FOGLIO
sheet 1/1

COMM.ANSALDO
job.ANSALDO

F10004EM

CLIENTE / Purchaser: ANSALDO ENERGIA

ORDINE / P.O. Nr.: BC 190075

APPARECCHIO / Vessel: CRIOSTATO — SIGLA / Item: 620RM07248
CRIOSTAT

COLLAUDO / Inspection

OGGETTO / Object: L.P SALDATURA CAMINO MONTATO SU FLANGIA
PENETRANT TEST ASSEBLI WELD STACK ON FLANGE

Extension: 100 %

STADIO DI LAVORAZIONE / Fabrication step: COME SALDATO / AS WELDED

SPECIFICA DI CONTROLLO / Examinatio procedure:
ASME 5 ART 6
ASME 8 DIS 2 ART 9.2

CONDIZIONI SUPERFICIALI / Test surface status:
COME SALDATO / As welded [X]
MOLATO / Ground [ ]
LAVORATO DI MACCHINA / Machined [ ]

COMBINAZ. LIQUIDI PENETRANTI / liquid penetrant grouping	LAVABILE IN ACQUA / water washable: VISIBILE / visible [X]	FLUOR. / fluoresc. [ ]	LAVABILE CON SOLVENTE / solvent removable: VISIBILE / visible [ ]	FLUOR. / fluoresc. [ ]	POST EMULSIFICABILE / post emulsified: VISIBILE / visible [ ]	FLUOR. / fluoresc. [ ]
PULITORE / Cleaner	VELNET					
PENETRANTE / Penetrant	RED W W					
EMULSIFICATORE / Emulsifier	/					
SOLVENTE / Remover	/					
RIVELATORE / Developper	WHITE W					
LUNGH.ONDA LUCE / Light wave lenght	/					
MARCA / Trade-mark	CGM					

PROCEDURA DI CONTROLLO / Examination sequence		
PULITURA CON / Cleaning by	VELNET	
APPLICAZIONE PENETRANTE CON / Penetrant application by	SPRAY	
TEMPO MIN. DI PENETRAZIONE / Penetrant minimum time	15	MINUTI / minutes
APPLICAZIONE EMULSIF. CON / Emulsifier application by	/	
RIMOZIONE PENETRANTE CON / Penetrant removal by	WATER	
APPLICAZIONE RIVELATORE / Developper Application	SPRAY	
ESSICAZIONE CON / Drying process by	AIR	
TEMPO MIN. DI SVILUPPO / Developing minimum time	15	MINUTI / minutes
TEMPO MAX. DI LETTURA / Checking maximum time	30	MINUTI / minutes

SCHIZZO / Sketch

PFC 16179 FASE 18

QCP 16179 PHASE 18

RISULTATI DELL'ESAME / Examination result: SATISFATORY

DATA/date		SIMIC.s.p.a.	COLLAUDATORI/INSPECTORS
10/07/97	level 1	level 2-3 SIMIC s.p.a. CDI ROBALDO PAOLO	

SIMIC. SPA. CAMERANA (CN)	MAPPA R.X. E PUNZONI SALDATORI	DOC.No. doc.No. 16179/07/97
		DATA. date. 03-03-97

CLIEMTE : ANSALDO.
ORDINE : BC 180846
OGGETTO : CRIOSTATO.
PARTICOLARE: VIROLA INTERNA.
DISEGNO : 620RM07246

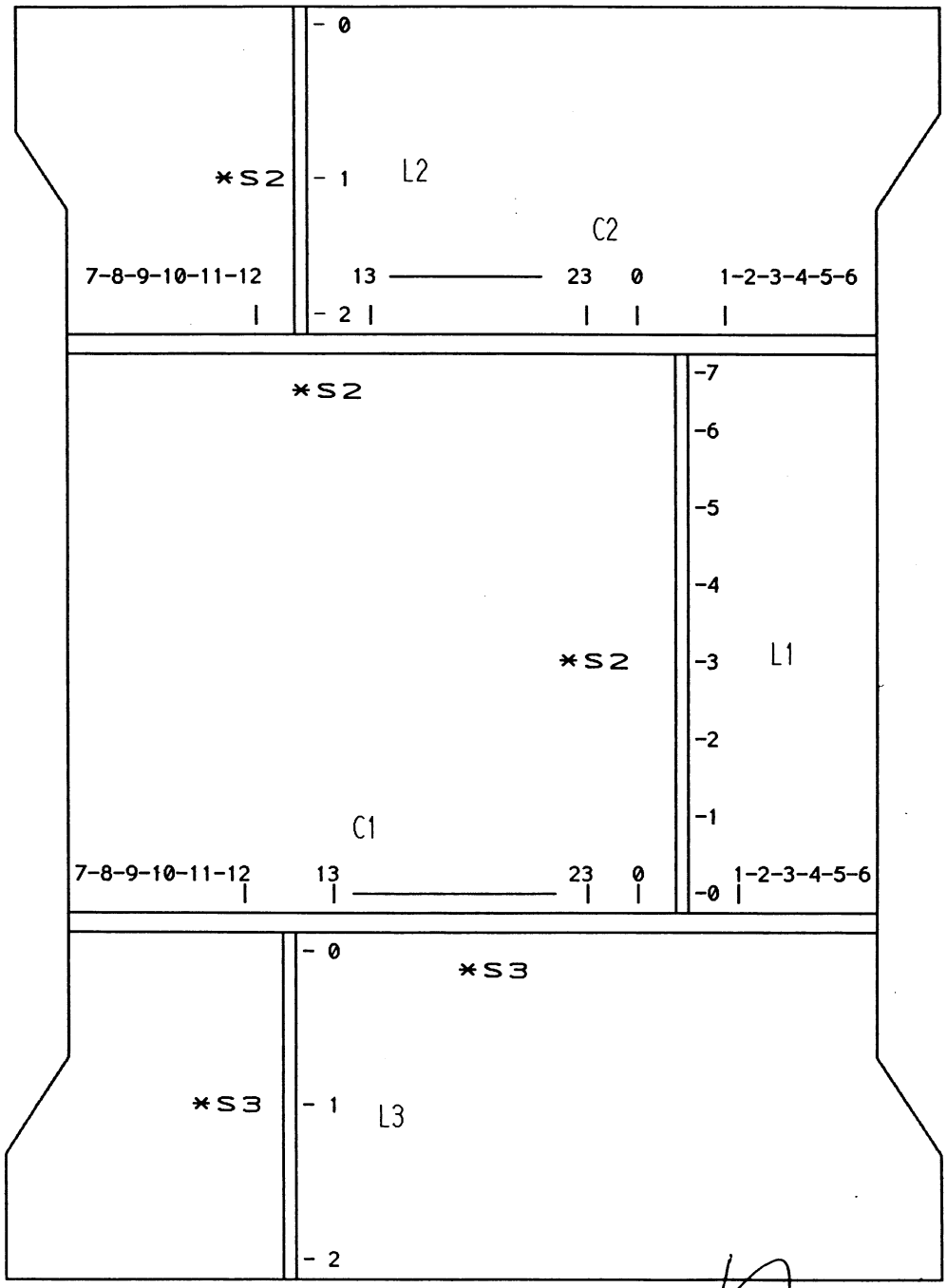

SIMIC s.p.a.
CDI
ROBALDO PAOLO

*:PUNZONE SALDATORE.

DOC:ANS16179

ITALIANA CONTROLLI S.r.l.

CERTIFICATO ESAME RADIOGRAFICO
RADIOGRAPHIC EXAMINATION REPORT

N° 16
F. S. 1 di 1

ORDINE / ORDER N	COMMESSA / JOB: 16178	COLLAUDO / INSPECTION	
CLIENTE / PURCHASER: SIMIC SPA	SIGLA / ITEM: D7246	NORME / CODE: ASME VIII	
SORGENTE / SOURCE: RX	FORMATO / SIZE: 10X48	DENSITA / DENSITY: 2.8	TIPO PENETRAMETRO / I.Q.I. TYPE: 6-10 AL DIN
TIPO DI PELLICOLA / FILM TYPE: AGFA	DISTANZA FUOCO - FILM / FOCUS-FILM DISTANCE: 700 mm.	SENSIBILITA / SENSITIVITY: CONFORME	PROCEDURA / PROCEDURE

OGGETTO / OBJECT	MATERIALE / MATERIAL	SPESSORE / THK.	ESTENSIONE / EXTENSION	GIUNTO / JOINT	TRATTO / POSITION	N° SALD / WELDER STAMP	Porosità / Porosity	Tubi / Pipes	Soffiature / Blowhole	Sfavellam / Misalignment	Inc. marginali / Undercutting	Ecc. penetraz. / Excess of pen.	Inc. tungsteno / Tungsten incl.	Inc. scorie / Slag inclusion	Scorie allin. / Slag lines	Man. penetr. / Lack of penet.	Man. fusione / Lack of fusion	Cricca / Crack	Incollatura / Stuck weld	GIUDIZIO / EVALUATION	NOTE / NOTES
				L1	0 - 1															A	
					1 - 2															A	
					2 - 3															A	
					3 - 4															A	
					4 - 5															A	
					5 - 6															A	
					6 - 7															A	
				L2	0 - 1															A	
					1 - 2															A	
				L3	0 - 1															A	
					1 - 2															A	
				C2	10-11		X													A	DOPO RIPARAZIONE
					12-13		X													A	DOPO RIPARAZIONE

ANSALDO QUALITA' 19 GE Parodi Enzo

ITALIANA CONTROLLI SRL
OP. II° LIV SNT TC 1A
D'AMANZO BRUNO

DATA / DATE: 28/02/97	OPERATORE / OPERATOR: GIANNONE F.	Q.C.M. / Q.C.M.: [signature]	ENTE COLLAUDO / INSPECTION AGENCY	ISPETTORE CLIENTE / CLIENT INSPECTOR

ANSALDO QUALITA' 19 GE Parodi Enzo

ITALIANA CONTROLLI S.r.l.

CERTIFICATO ESAME RADIOGRAFICO
RADIOGRAPHIC EXAMINATION REPORT

N° 17
F 1 di 1

ORDINE / ORDER N	COMMESSA / JOB 16178	COLLAUDO / INSPECTION	
CLIENTE / PURCHASER SIMIC SPA	SIGLA / ITEM D7246	NORME / CODE ASME VIII	
SORGENTE / SOURCE RX	FORMATO / SIZE 10X48	DENSITA / DENSITY 2,8	TIPO PENETRAMETRO / I.Q.I. TYPE 6-10 AL DIN
TIPO DI PELLICOLA / FILM TYPE AGFA	DISTANZA FUOCO - FILM / FOCUS-FILM DISTANCE 1/2 ϕ	SENSIBILITA / SENSITIVITY CONFORME	PROCEDURA / PROCEDURE

OGGETTO / OBJECT	MATERIALE / MATERIAL	SPESSORE / THK.	ESTENSIONE / EXTENSION	GIUNTO / JOINT	TRATTO / POSITION	N° SALD. / WELDER STAMP	Porosità / Porosity	Tub / Pipes	Soffiature / Blowholes	Sfalsam / Misalignment	Inc marginali / Undercutting	Ecc penetraz / Excess of pen	Inc lunghezza / Lengthen incl	Inc scorie / Slag inclusion	Scorie allin / Slag lines	Man penetr / Lack of penet	Man fusione / Lack of fusion	Cricca / Crack	Incollatura / Stuck weld	GIUDIZIO / EVALUATION	NOTE / NOTES
				C1	0 . 1		X				X										
					1 . 2		X														
					2 . 3		X		X												
					3 . 4		X														
					4 . 5		X														
					5 . 6		X														
					6 . 7		X														
					7 . 8		X														
					8 . 9		X														
					9 . 10		X														
					10 . 11		X														
					11 . 12		X														
					12 . 13		X														
					13 . 14		X														
					14 . 15		X														
					15 . 16		X														
					16 . 17		X														
					17 . 18		X														
					18 . 19		X														
					19 . 20		X														
					20 . 21		X														
					21 . 22		X														
					22 . 23		X														
					23 . 0		X														

ITALIANA CONTROLLI SRL
OP. II° LIV SNT TC TA
D'AMANZO BRUNO

DATA / DATE 28/02/97	OPERATORE / OPERATOR GIANNONE F.	Q.C.M. / Q.C.M.	ENTE COLLAUDO / INSPECTION AGENCY	ISPETTORE CLIENTE / CLIENT INSPECTOR

ANSALDO QUALITA' Parodi Enzo

ITALIANA CONTROLLI S.r.l.

CERTIFICATO ESAME RADIOGRAFICO
RADIOGRAPHIC EXAMINATION REPORT

N° 18
F S 1 di 1

ORDINE / ORDER N	COMMESSA / JOB: 16178	COLLAUDO / INSPECTION	
CLIENTE / PURCHASER: SIMIC SPA	SIGLA / ITEM: D7246	NORME / CODE: ASME VIII	
SORGENTE / SOURCE: RX	FORMATO / SIZE: 10X48	DENSITA / DENSITY	TIPO PENETRAMETRO / I.Q.I. TYPE: 6-10 AL DIN
TIPO DI PELLICOLA / FILM TYPE: AGFA	DISTANZA FUOCO - FILM / FOCUS-FILM DISTANCE: 1/2 ϕ	SENSIBILITA / SENSITIVITY	PROCEDURA / PROCEDURE

OGGETTO / OBJECT	MATERIALE / MATERIAL	SPESSORE / THK.	ESTENSIONE / EXTENSION	GIUNTO / JOINT	TRATTO / POSITION	N° SALD. / WELDER STAMP	Porosità / Porosity	Tubi / Pipes	Soffiature / Blowhole	Sfavellam. / Misalignment	Inc. marginali / Undercutting	Ecc. penetraz. / Excess of pen.	Inc. tungsteno / Tungsten incl.	Inc. scorie / Slag inclusion	Scorie allin. / Slag lines	Man. penetr. / Lack of penetr.	Man. fusione / Lack of fusion	Cricca / Crack	Incollatura / Stuck weld	GIUDIZIO / EVALUATION	NOTE / NOTES
				C2	0 . 1		X													A	
					1 . 2		X													A	
					2 . 3		X													A	
					3 . 4		X													A	
					4 . 5		X													A	
					5 . 6		X													A	
					6 . 7		X													A	
					7 . 8		X													A	
					8 . 9		X													A	
					9 . 10		X													A	
					10 . 11		X													RIP.	
					11 . 12		X													A	
					12 . 13		X													RIP.	
					13 . 14		X													A	
					14 . 15		X													A	
					15 . 16		X													A	
					16 . 17		X													A	
					17 . 18		X													A	
					18 . 19		X													A	
					19 . 20		X													A	
					20 . 21		X													A	
					21 . 22		X													A	
					22 . 23		X													A	
					23 . 0		X													A	

ITALIANA CONTROLLI SRL
OP. II° LIV SNT TC 1A
D'AMANZO BRUNO

DATA / DATE	OPERATORE / OPERATOR: GIANNONE F.	Q.C.M / Q.C.M: [signature]	ENTE COLLAUDO / INSPECTION AGENCY	ISPETTORE CLIENTE / CLIENT INSPECTOR

ANSALDO QUALITA' GE 19 Parodi Enzo

SIMIC S.P.A. CAMERANA (CN)	MAPPA R.X. E PUNZONI SALDATORI	DOC.No. doc.No. 16179/08/97
		DATA. date. 03-03-97

CLIENTE : ANSALDO

ORDINE : BC 180846

OGGETTO : CRIOSTATO

PAFTICOLARE: VIROLA ESTERNA

DISEGNO : 620RM07245

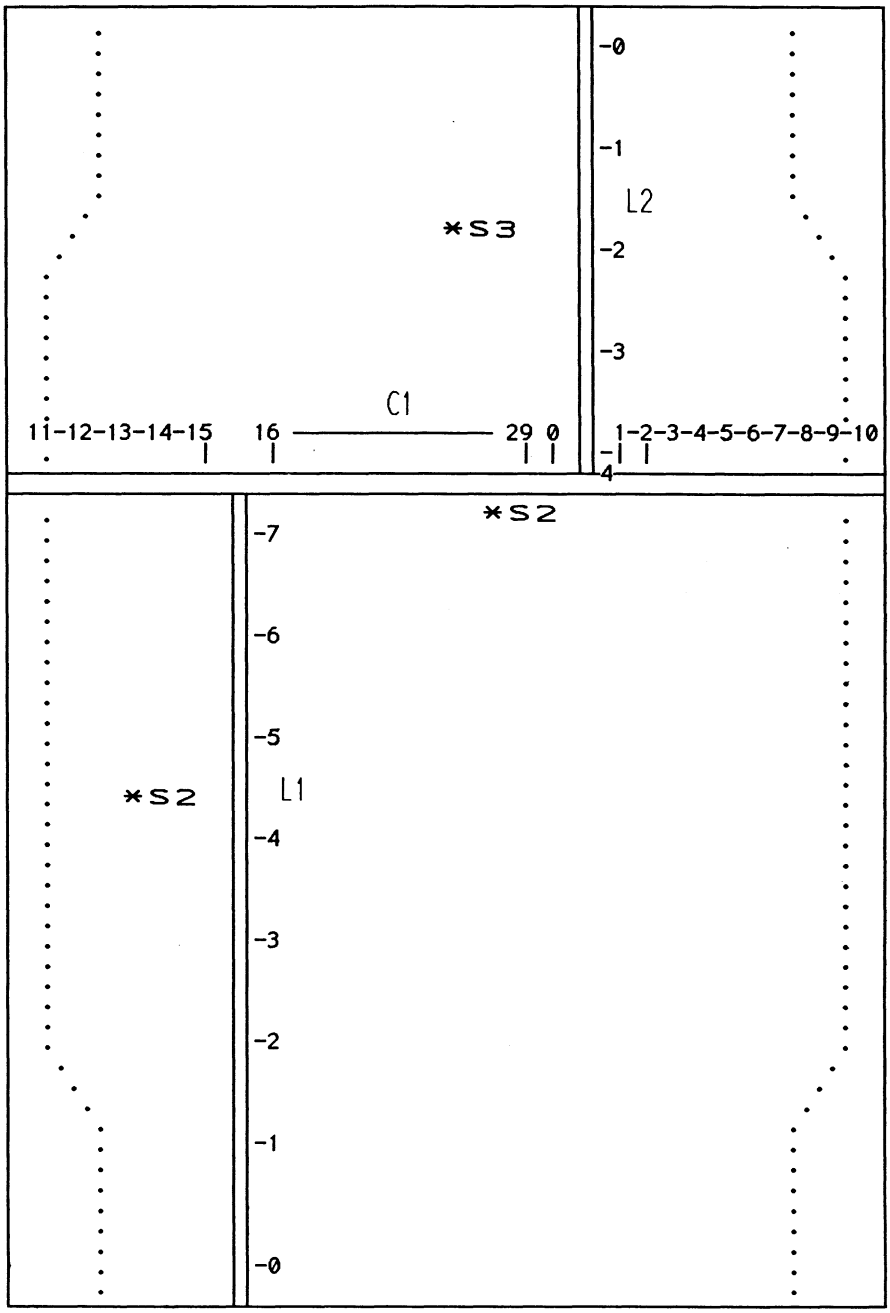

* PUNZONI SALDATORI.

SIMIC s.p.a.
CDI
ROBALDO PAOLO

DOC:AN16179A

ITALIANA CONTROLLI S.r.l.

CERTIFICATO ESAME RADIOGRAFICO
RADIOGRAPHIC EXAMINATION REPORT

N° 15
F S 1 di 1

ORDINE / ORDER N	COMMESSA / JOB: 16178	COLLAUDO / INSPECTION	
CLIENTE / PURCHASER: SIMIC SPA	SIGLA / ITEM: D7245	NORME / CODE	
SORGENTE / SOURCE: RX	FORMATO / SIZE: 10x48	DENSITA / DENSITY: 2.8	TIPO PENETRAMETRO / I.Q.I. TYPE: 10-6 AL DIN
TIPO DI PELLICOLA / FILM TYPE: AGFA	DISTANZA FUOCO - FILM / FOCUS-FILM DISTANCE: 1/2 Ø	SENSIBILITA / SENSITIVITY: CONFORME	PROCEDURA / PROCEDURE

OGGETTO / OBJECT	MATERIALE / MATERIAL	SPESSORE / THK.	ESTENSIONE / EXTENSION	GIUNTO / JOINT	TRATTO / POSITION	N° SALD / WELDER STAMP	Porosità / Porosity	Tubi / Pipes	Soffiature / Blowhole	Sfiatamento / Misalignment	Inc. marginali / Undercutting	Ecc. penetraz. / Excess of pen.	Inc. tungsteno / Tungsten incl.	Inc. scorie / Slag inclusion	Scorie allin. / Slag lines	Man. penetr. / Lack of penet.	Man. fusione / Lack of fusion	Cricca / Crack	Incollatura / Stuck weld	GIUDIZIO / EVALUATION	NOTE / NOTES
				C1	0 · 1		X													A	
					1 · 2		X													A	
					2 · 3		X													A	
					3 · 4		X													A	
					4 · 5		X													A	
					5 · 6		X													A	
					6 · 7		X													A	
					7 · 8		X													A	
					8 · 9		X													A	
					9 · 10		X													A	
					10 · 11		X													A	
					11 · 12		X													A	
					12 · 13		X													A	
					13 · 14		X													A	
					14 · 15		X													A	
					15 · 16		X													A	
					16 · 17		X													A	
					17 · 18		X													A	
					18 · 19		X													A	
					19 · 20		X													A	
					20 · 21		X													A	
					21 · 22		X													A	
					22 · 23		X													A	
					23 · 24		X													A	
					24 · 25		X													A	

ITALIANA CONTROLLI SRL
OP. II° LIV SNT TC 1A
D'AMANZO BRUNO

DATA / DATE	OPERATORE / OPERATOR: GIANNONE FABRIZIO	Q.C.M. / Q.C.M.	ENTE COLLAUDO / INSPECTION AGENCY	ISPETTORE CLIENTE / CLIENT INSPECTOR

D'AMANZO BRUNO
OPERATORE II° LIV.
SNT - TC - 1 A N. 1481

A 19 GE
ANSALDO QUALITA'
Parodi Enzo

ITALIANA CONTROLLI S.r.l.

CERTIFICATO ESAME RADIOGRAFICO
RADIOGRAPHIC EXAMINATION REPORT

N° 14
F. 1 di 1

ORDINE / ORDER N: BC 180846
COMMESSA / JOB: 16178
COLLAUDO / INSPECTION:
CLIENTE / PURCHASER: SIMIC SPA
SIGLA / ITEM: D. 7245
NORME / CODE:
SORGENTE / SOURCE: RX
FORMATO / SIZE: 10x48
DENSITÀ / DENSITY: 2,7
TIPO PENETRAMETRO / I.Q.I. TYPE: 10 AL DIN
TIPO DI PELLICOLA / FILM TYPE: AGFA D7
DISTANZA FUOCO - FILM / FOCUS-FILM DISTANCE: 700 + 1/2 ϕ
SENSIBILITÀ / SENSITIVITY: CONFORME
PROCEDURA / PROCEDURE:

	OGGETTO / OBJECT	MATERIALE / MATERIAL	SPESSORE / THK.	ESTENSIONE / EXTENSION	GIUNTO / JOINT	TRATTO / POSITION	N° SALD. / WELDER STAMP	Porosità / Porosity	Tubi / Pipes	Sottosquadro / Blowhole	Sfondam. / Magnification	Inc. marginale / Undercutting	Ecc. penetraz. / Excess of pen.	Inc. longitudinale / Longitudinal	Inc. scorie / Slag inclusion	Scorie allin. / Slag lines	Man. penetraz. / Lack of penetr.	Man. fusione / Lack of fusion	Cricca / Crack	Incollatura / Stuck weld	GIUDIZIO / EVALUATION	NOTE / NOTES
					L1	0.1															A	
						1.2															A	
						2.3															A	
						3.4															A	
						4.5															A	
						5.6															A	
						6.7															A	
					L2	0.1															A	
						1.2															A	
						2.3															A	
						3.4															A	

ITALIANA CONTROLLI SRL
OP. III° LIV. SNT. TC IA
D'AMANZO BRUNO

DATA / DATE:
OPERATORE / OPERATOR: GIANNONE F.
Q.C.M. / Q.C.M.:
ENTE COLLAUDO / INSPECTION AGENCY:
ISPETTORE CLIENTE / CLIENT INSPECTOR:

ANSALDO QUALITA' GE 19
Parodi Enzo

SIMIC. SPA. CAMERANA (CN)	MAPPA R.X. E PUNZONI SALDATORI	DOC.No. doc.No. 16179/07/97
		DATA. date. 03-03-97

CLIEMTE : ANSALDO.

ORDINE : BC 180846

OGGETTO : CRIOSTATO.

PARTICOLARE: FLANGE

DISEGNO : 620RM0724

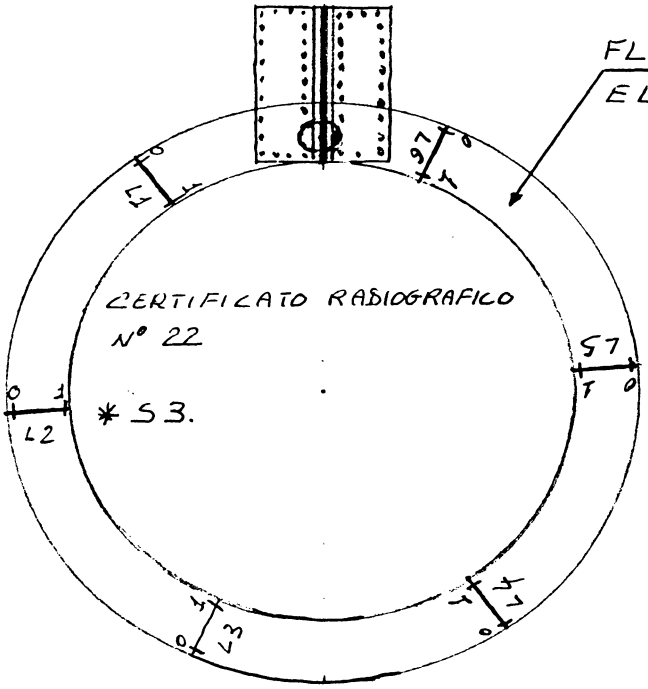

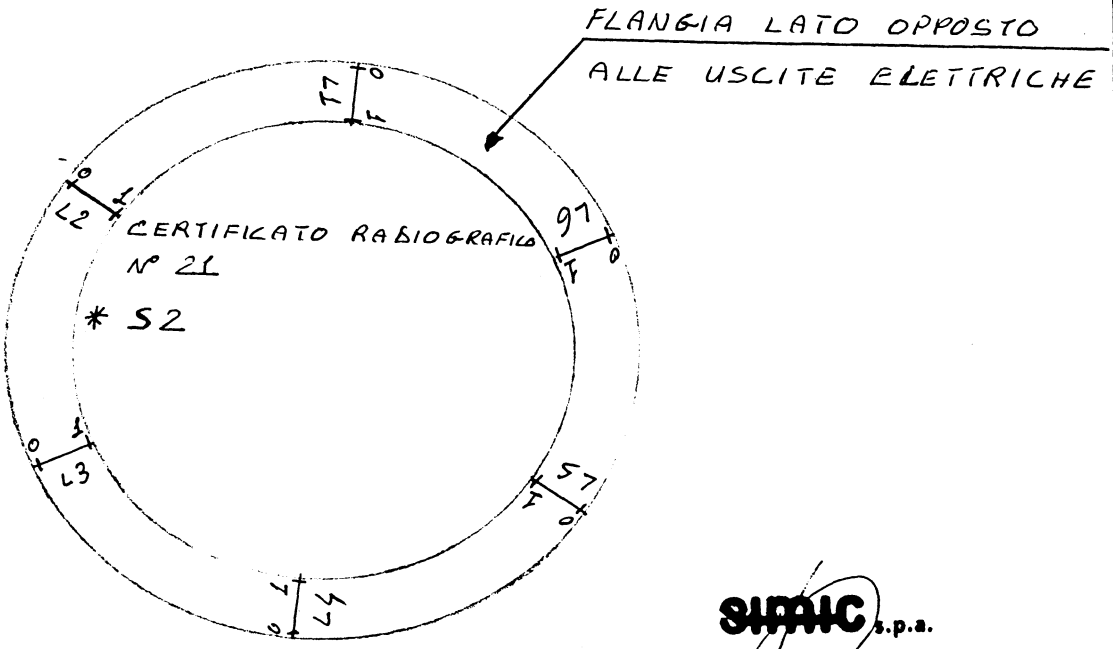

SIMIC s.p.a.
CDI
ROBALDO PAOLO

*:PUNZONE SALDATORE.

DOC:ANS16179

ITALIANA CONTROLLI S.r.l.

CERTIFICATO ESAME RADIOGRAFICO
RADIOGRAPHIC EXAMINATION REPORT

N° 22
F S 1 di 1

ORDINE / ORDER N: BC 180846	COMMESSA / JOB:	COLLAUDO / INSPECTION:	
CLIENTE / PURCHASER: SIMIC SPA	SIGLA / ITEM: DIS 620 ORMO 7247/1	NORME / CODE:	
SORGENTE / SOURCE: RX	FORMATO / SIZE: 10X48	DENSITÀ / DENSITY: 2,4	TIPO PENETRAMETRO / I.Q.I. TYPE: 6AL DIN
TIPO DI PELLICOLA / FILM TYPE: AGFA D7	DISTANZA FUOCO - FILM / FOCUS-FILM DISTANCE: 700	SENSIBILITÀ / SENSITIVITY: CONFORME	PROCEDURA / PROCEDURE:

OGGETTO / OBJECT	MATERIALE / MATERIAL	SPESSORE / THK.	ESTENSIONE / EXTENSION	GIUNTO / JOINT	TRATTO / POSITION	N° SALD. / WELDER STAMP	TIPO DIFETTO / TYPE OF DEFECT: Porosità / Porosity	Tarli / Pipes	Soffiature / Blowhole	Slivellam. / Misalignment	Inc. marginali / Undercutting	Ecc. penetraz. / Excess of pen.	Inc. tungsteno / Tungsten incl.	Inc. scorie / Slag inclusion	Scorie allin. / Slag lines	Man. penetr. / Lack of penet.	Man. fusione / Lack of fusion	Cricca / Crack	Incollatura / Stuck weld	GIUDIZIO / EVALUATION	NOTE / NOTES
				L1	0:1		X													A	A=ACCETTABILE
				L2	0:1															A	
				L3	0:1		X													A	
				L4	0:1															A	
				L5	0:1		X													A	
				L6	0:1		X													A	

ITALIANA CONTROLLI SRL
OP. II° LIV SNT TC 1A
D'AMANZO BRUNO

ANSALDO QUALITA'
Parodi Enzo

DATA / DATE: 27/01/87	OPERATORE / OPERATOR: GIANNONE F.	Q.C.M. / Q.C.M.	ENTE COLLAUDO / INSPECTION AGENCY	ISPETTORE CLIENTE / CLIENT INSPECTOR

ITALIANA CONTROLLI S.r.l.

CERTIFICATO ESAME RADIOGRAFICO
RADIOGRAPHIC EXAMINATION REPORT

N° 21
F 1 di 1

ORDINE / ORDER N. BC 180846	COMMESSA / JOB	COLLAUDO / INSPECTION	
CLIENTE / PURCHASER SIMIC SPA	SIGLA / ITEM DIS 620 ORMO 7247/2	NORME / CODE	
SORGENTE / SOURCE RX	FORMATO / SIZE 10x48	DENSITA / DENSITY 2.4	TIPO PENETRAMETRO / I.Q.I. TYPE 6 AL DIN
TIPO DI PELLICOLA / FILM TYPE AGFA D7	DISTANZA FUOCO - FILM / FOCUS-FILM DISTANCE 700	SENSIBILITA / SENSITIVITY CONFORME	PROCEDURA / PROCEDURE

TIPO DIFETTO / TYPE OF DEFECT

OGGETTO / OBJECT	MATERIALE / MATERIAL	SPESSORE / THK.	ESTENSIONE / EXTENSION	GIUNTO / JOINT	TRATTO / POSITION	N° SALD. / WELDER STAMP	Porosità / Porosity	Tali / Pipes	Soffiature / Blowhole	Slivellam. / Misalignment	Inc. marginali / Undercutting	Ecc. penetraz. / Excess of pen.	Inc. lungitudinale / Longitudinal incl.	Inc. scorie / Slag inclusion	Scorie allin. / Slag lines	Man. penetr. / Lack of penet.	Man. fusione / Lack of fusion	Cricca / Crack	Incollatura / Stuck weld	GIUDIZIO / EVALUATION	NOTE / NOTES
				L1	0-1		X													A	A= ACCETTABILE
				L2	0 1		X													A	
				L3	0 1															A	
				L4	0 1		X													A	
				L5	0 1															A	
				L6	0 1															A	

ITALIANA CONTROLLI SRL
OP. II° LIV SNT TC 1A
D'AMANZO BRUNO

ANSALDO QUALITA'
Parodi Enzo

DATA / DATE 27/01/87	OPERATORE / OPERATOR GIANNONE F.	Q.C.M / Q.C.M	ENTE COLLAUDO / INSPECTION AGENCY	ISPETTORE CLIENTE / CLIENT INSPECTOR

SIMIC s.p.a.
CAMERANA (CN)

CERTIFICATO DI CONTROLLO DIMENSIONALE
DIMENSIONAL CHECK TEST REPORT

SIMIC SPA
CAMERANA (CN)

RINTRACCIABILITA' MATERIALI
MATERIALS TRACEABILITY

SIMIC s.p.a.
CAMERANA (CN)

RINTRACCIABILITA' MATERIALI

DOC.No.
doc.No. 16179/12/97

DATA.
date. 28-03-97

CLIEMTE : ANSALDO.

ORDINE : BC 180846

OGGETTO : CRIOSTATO.

PARTICOLARE: VIROLA INTERNA / VIROLA ESTERNA / FLANGE / CAMINO

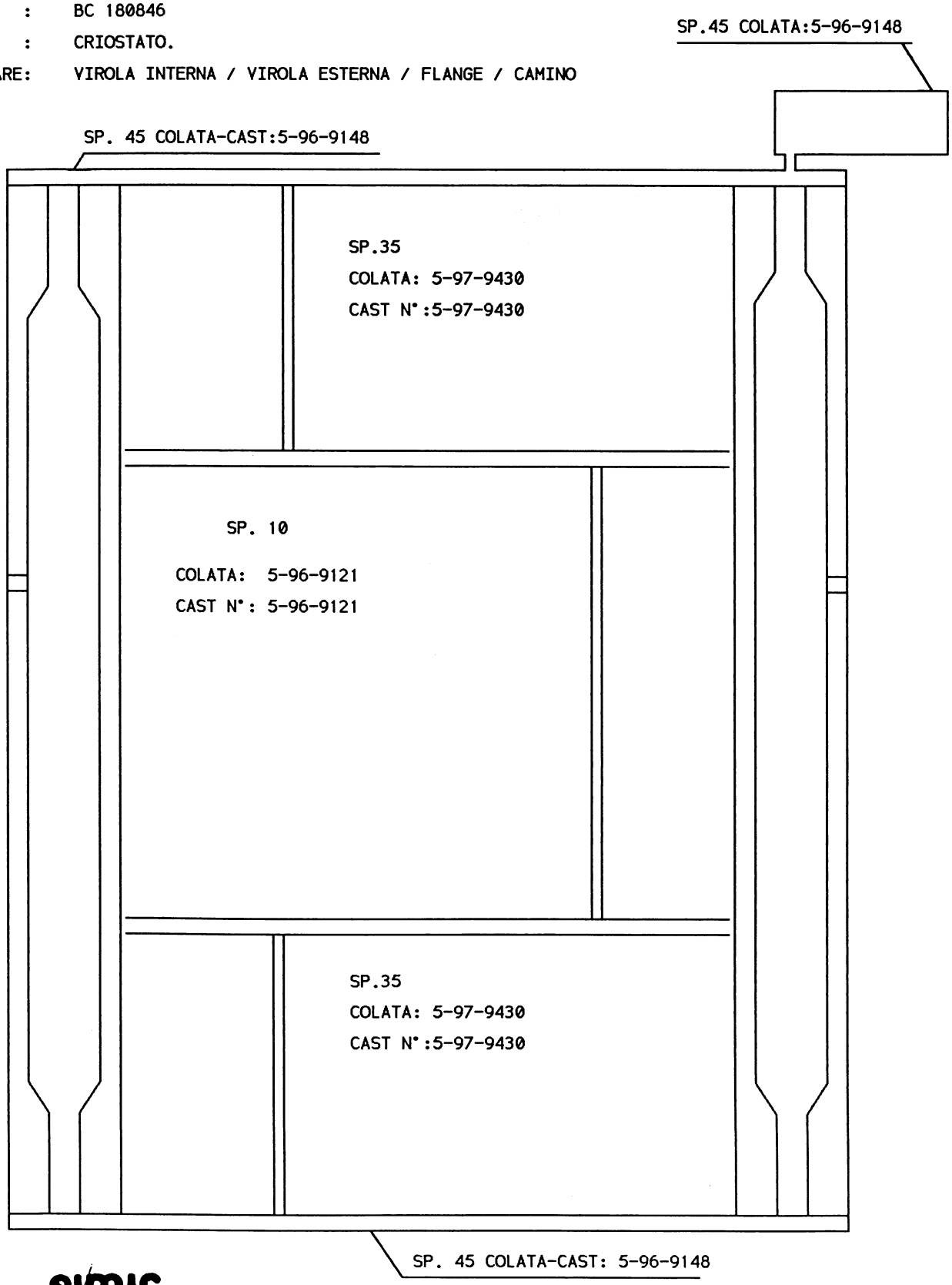

SIMIC s.p.a.
CDI
ROBALDO PAOLO

DOC:ANS16179

SIMIC SPA
CAMERANA (CN)

CERTIFICATI MATERIALI
MATERIALS CERTIFICATE

Predieri Metalli S.P.A.
COMMERCIO METALLI
Capitale Soc. 4.500.000.000 i.v.

Sede Amministrativa e Magazzino:
42100 REGGIO EMILIA (ITALIA) • Via Ferraroni, 7
Uff. Vend. Tel. 0522/ 384000 • Fax 0522/ 384070 - **Uff. Acquisti** Tel. 0522/ 384100 • Fax 0522/ 384074
Uff. Amm.ne Tel. 0522/ 384130 • Fax 0522/ 384080 - **Uff. Dir.** Tel. 0522/ 384055 • Fax 0522/384074
Telex 531553 PREMET I

Cod. Fisc. e Partita IVA 00639240357
C.C.I.A.A. di RE n. 145537
Iscr. Trib di RE n. 9318
C.C.P. 10330421
Nr. Mecc. RE 002746

PROFILATI • LAMINATI • ESTRUSI • TUBI • LAMIERE • TONDI E PIATTI • RAME • ALLUMINIO • OTTONE • STAGNO • ZINCO • PIOMBO • BRONZO • ACCIAIO INOX
LAMIERE FERRO E ALLUMINIO FORATE A FANTASIA ANODIZZATE E GREZZE • ACCESSORI PER PROFILATI • SCAFFALATURE • RACCORDERIA ACCIAIO INOX

42100 Reggio Emilia, 17.01.1997

Ns. Rif.:

Vs. Rif.:

SPETT.LE DITTA
SIMIC S.P.A.
VIA V.VENETO
12072 CAMERANA (CN)

RACCOMANDATA A.R.

ALLA CORTESE ATTENZIONE SIG.BALDI

OGGETTO: CERTIFICATI HOOGOVENS

COME DA ACCORDI LE INVIAMO CERTIFICATI IN ORIGINALE DELLA DITTA HOOGOVENS.

L' OCCASIONE CI E' GRADITA PER PORGERVI DISTINTI SALUTI.

PREDIERI METALLI SPA

SIG.DARIN

com. 16179

SIMIC CAMERANA

31 GEN. 1997

PROT. N. 68

Hoogovens Aluminium

Hoogovens Aluminium Walzprodukte GmbH
Postfach 10 03 31 · D-56033 Koblenz

INSPECTION CERTIFICATE / TEST REPORT / (DIN 50049/3.1B/EN 10204/3.1B)

NO.: 1177606 PAGE: 1

PURCHASER: PREDIERI METALLI SPA
REGGIO EMILIA

ORDER NO. MAN.: 70714
SPEC.: ASTM B 209

ORDER NO. PURCH.:7629 DATED 16 SEPT. 1996
ALLOY/TEMPER: 5083-0
ITEM: 05 LOT: 559681 PRODUCT: PLATE
QUANTITY: 1 DIMENSIONS: 10,000 x 2500,00 x 9500,00 mm

RESULTS:

Mechanical properties:

Pl. No.	Spec. No.	Y.S. N/mm²	U.T.S. N/mm²	El. %	Reduction of area %	Impact strength (DVM) J/cm²
Min. L:		125	276	16,0		
Max. L:		200	352			
	1	138	300	27,6		

Chemical composition: in % , remainder Al

Cast No.: 5-96-9121

Si	Fe	Cu	Mn	Mg	Cr	Zn	Ti	B
0,277	0,268	0,083	0,650	4,712	0,102	0,140	0,0311	0,0014
Zr	Pb	Ni	Sn	Be	Na	Li	V	
0,004	0,0005	0,0058	0,0032	0,0013	0,0001	0,0000	0,0056	
Al	Tl	Ti+Zr	Cu/Mg					
		0,035						

Koblenz, the 13.11.96 HF

Quality assurance

Hoogovens Aluminium

Hoogovens Aluminium Walzprodukte GmbH
Postfach 10 03 31 · D-56033 Koblenz

INSPECTION CERTIFICATE / TEST REPORT / (DIN 50049/3.1B/EN 10204/3.1B)

NO.: 1177604 PAGE: 1

PURCHASER: PREDIERI METALLI SPA
REGGIO EMILIA

ORDER NO. MAN.: 70714
SPEC.: ASTM B 209

ORDER NO. PURCH.:7629 DATED 16 SEPT. 1996
ALLOY/TEMPER: 5083-0
ITEM: 02 LOT: 556423 PRODUCT: PLATE
QUANTITY: 1 DIMENSIONS: 50,000 x 1400,00 x 12000,00 mm

RESULTS:

Mechanical properties:

Pl. No.	Spec. No.	Y.S. N/mm²	U.T.S. N/mm²	El. %	Reduction of area %	Impact strength (DVM) J/cm²
Min. L:		118	269	16,0		
Max. L:		200	345			
	1	187	309	23,4		
	2	187	315	26,0		

Chemical composition: in % , remainder Al

Cast No.: 5-96-9150

Si	Fe	Cu	Mn	Mg	Cr	Zn	Ti	B
0,279	0,200	0,098	0,701	4,670	0,134	0,132	0,025	0,0019
Zr	Pb	Ni	Sn	Be	Na	Li	V	
0,004	0,001	0,004		0,0010	0,0001	0,0002	0,005	
Al	Tl	Ti+Zr	Cu/Mg					

Koblenz, the 13.11.96 HF

Quality assurance

Hoogovens Aluminium

Hoogovens Aluminium Walzprodukte GmbH
Postfach 10 03 31 · D-56033 Koblenz

INSPECTION CERTIFICATE / TEST REPORT / (DIN 50049/3.1B/EN 10204/3.1B)

NO.: 1177605 PAGE: 1

PURCHASER: PREDIERI METALLI SPA
REGGIO EMILIA

ORDER NO. MAN.: 70714
SPEC.: ASTM B 209

ORDER NO. PURCH.:7629 DATED 16 SEPT. 1996
ALLOY/TEMPER: 5083-0
ITEM: 03 LOT: 556280 PRODUCT: PLATE
QUANTITY: 1 DIMENSIONS: 50,000 x 2500,00 x 12000,00 mm

RESULTS:

Mechanical properties:

Pl. No.	Spec. No.	Y.S. N/mm²	U.T.S. N/mm²	El. %	Reduction of area %	Impact strength (DVM)	Impact strength J/cm²
Min. L:		118	269	16,0			
Max. L:		200	345				
	1	186	305	25,4			
	2	189	298	23,2			
	3	182	298	23,6			

Chemical composition: in % , remainder Al

Cast No.: 3-96-4366

Si	Fe	Cu	Mn	Mg	Cr	Zn	Ti	B
0,304	0,241	0,088	0,633	4,724	0,101	0,096	0,027	0,0031
Zr	Pb	Ni	Sn	Be	Na	Li	V	
0,005	0,000	0,004		0,0011	0,0001	0,0002	0,005	
Al	Tl	Ti+Zr	Cu/Mg					

Koblenz, the 13.11.96 HF

Quality assurance

Hoogovens Aluminium

Hoogovens Aluminium Walzprodukte GmbH
Postfach 10 03 31 · D-56033 Koblenz

INSPECTION CERTIFICATE / TEST REPORT / (DIN 50049/3.1B/EN 10204/3.1B)

NO.: 1177603 PAGE: 1

PURCHASER: PREDIERI METALLI SPA
REGGIO EMILIA

ORDER NO. MAN.: 70714
SPEC.: ASTM B 209

ORDER NO. PURCH.:7629 DATED 16 SEPT. 1996
ALLOY/TEMPER: 5083-0
ITEM: 01 LOT: 556279 PRODUCT: PLATE
QUANTITY: 1 DIMENSIONS: 45,000 x 2500,00 x 5700,00 mm

RESULTS:

Mechanical properties:

Pl. No.	Spec. No.	Y.S. N/mm²	U.T.S. N/mm²	El. %	Reduction of area %	Impact strength (DVM)	Impact strength J/cm²
Min. L:		118	269	16,0			
Max. L:		200	345				
	1	184	315	23,2			

Chemical composition: in % , remainder Al

Cast No.: 5-96-9148

Si	Fe	Cu	Mn	Mg	Cr	Zn	Ti	B
0,137	0,165	0,090	0,681	4,657	0,095	0,110	0,027	0,0017
Zr	Pb	Ni	Sn	Be	Na	Li	V	
0,003	0,001	0,004		0,0009	0,0001	0,0003	0,006	
Al	Tl	Ti+Zr	Cu/Mg					

Koblenz, the 13.11.96 HF

Quality assurance

Hoogovens Aluminium

Hoogovens Aluminium Walzprodukte GmbH
Postfach 10 03 31 · D-56033 Koblenz

INSPECTION CERTIFICATE / TEST REPORT / (DIN 50049/3.1B/EN 10204/3.1B)

NO.. 0177765 PAGE:

PURCHASER: PREDIERI METALLI SPA

ORDER NO. MAN.: 70714

REGGIO EMILIA SPEC.: ASTM B 209

ORDER NO. PURCH.:7629 DATED 16 SEPT. 1996

ALLOY/TEMPER: 5083-0

ITEM: 04 LOT: 567836 PRODUCT: PLATE

QUANTITY: 1 DIMENSIONS: 35,000 x 1400,00 x 11000,00 mm

RESULTS:

Mechanical properties:

Pl. No.	Spec. No.	Y.S. N/mm²	U.T.S. N/mm²	El. %	Reduction of area %	Impact strengt (DVM) J/cm²
Min. L:		125	276	16,0		
Max. L:		199	351			
	1	193	326	20,4		

Chemical composition: in % , remainder Al Cast No.: 5-97-9430

Si	Fe	Cu	Mn	Mg	Cr	Zn	Ti	B
0,277	0,266	0,092	0,623	4,619	0,088	0,144	0,026	0,0024
Zr	Pb	Ni	Sn	Be	Na	Li	V	
0,005	0,001	0,003		0,0014	0,0002	0,0003	0,004	
Al	Ti	Ti+Zr	Cr					

Koblenz, the 21.01.97 MT

Quality assurance

SIMIC SPA
CAMERANA (CN)

WELD-MAP WPS PQR WPQ

SIMIC SPA
CAMERANA (CN)

WELD MAP
MAPPA DI SALDATURA

No 16179/96

MANIFACTORY / COSTRUTTORE: SIMIC spa

DRAWING / DISEGNO: 620RM07242

ORDER No / ORDINE No: BC180846

JOB / COMM.: 0004EM

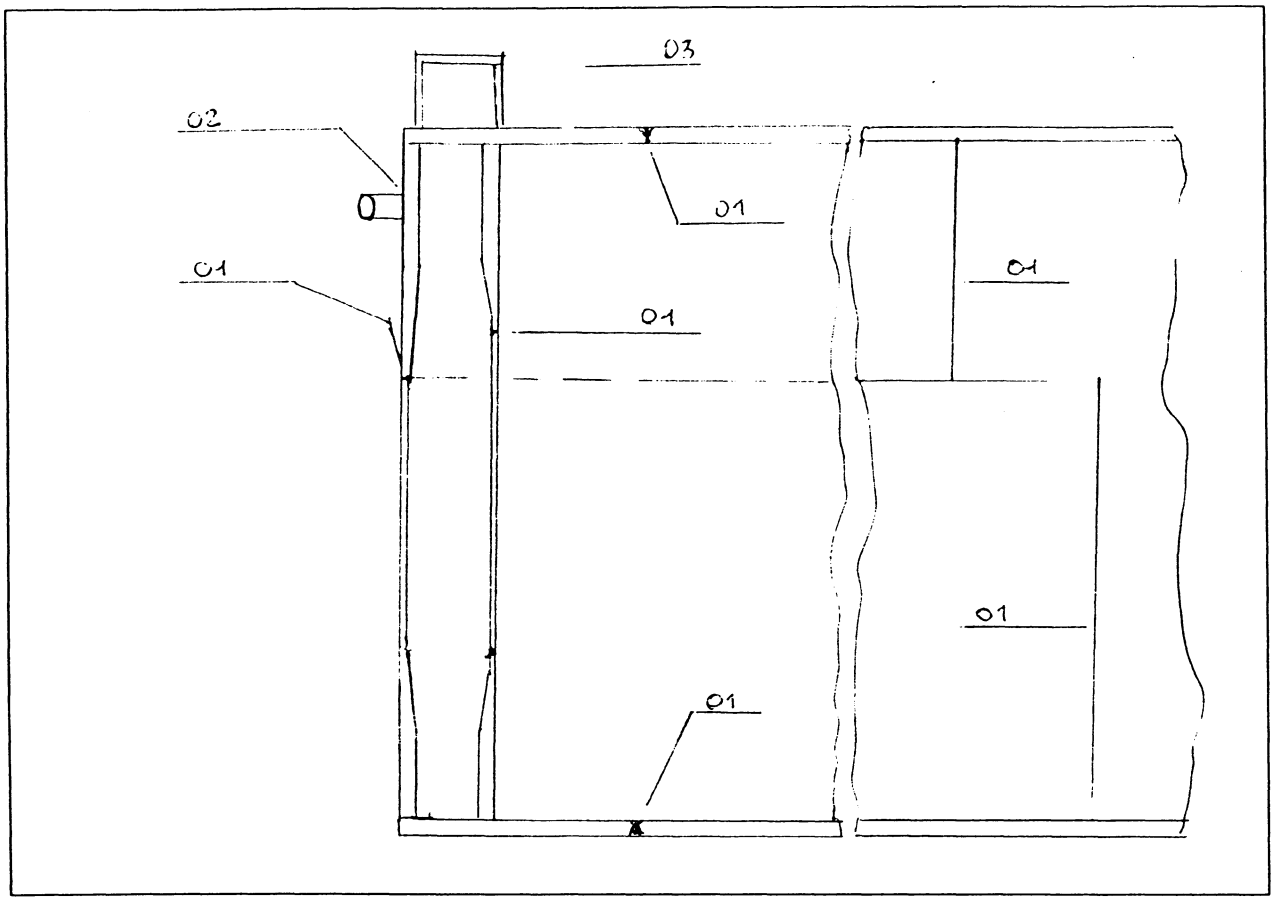

MARK	W.P.S.	P.Q.R.	BASE MATERIALS	JOINTS	WELDER NAME	CLOK	STAMP
01	16179/1	R1/96	AL 5083-0	SINGLE "V"	PALMAS PIERO	9617723/2	S2
02	16179/2	R1/96	AL 5083-0	FILLET	PALMAS PIERO	9617723/2	S2
03	16179/3	R1/96	AL 5083-0	FILLET	PALMAS PIERO	9617723/2	S2

FOGLIO 1 DI 2 REV. 0 | DATA REV. 30-11-96 | FIRMA Biestro | DATA 30-11-96

SIMIC S.p.A.
QUALITY MANAGER
BIESTRO ALBERTO

SIMIC SPA
CAMERANA (CN)

WELD MAP
MAPPA DI SALDATURA

No 16179/96

MANIFACTORY
COSTRUTTORE: SIMIC spa

DRAWING
DISEGNO: 620RM07242

ORDER No
ORDINE No: BC180846

JOB
COMM.: 0004EM

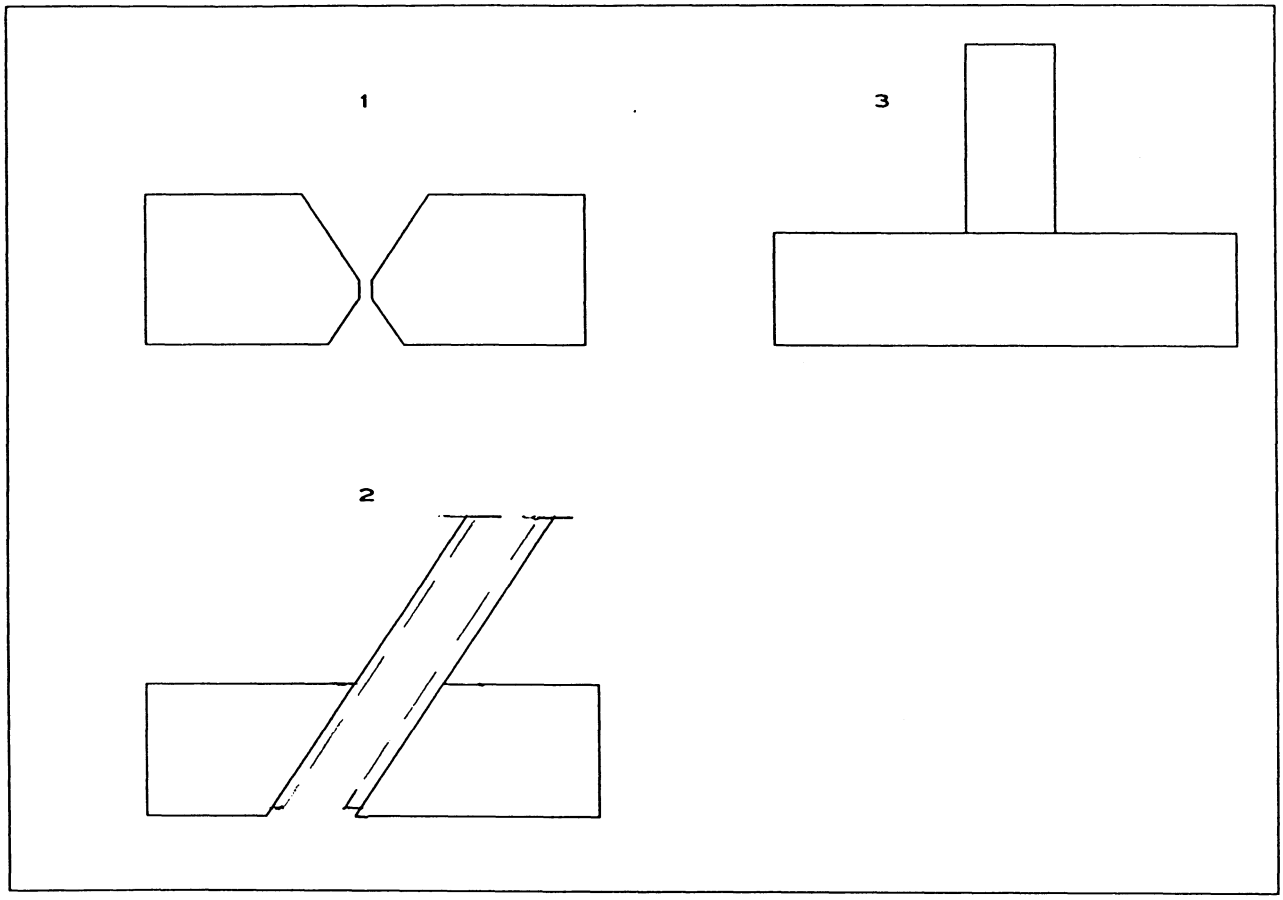

MARK	W.P.S.	P.Q.R.	BASE MATERIALS	JOINTS	WELDER NAME	CLOK	STAMP
01	16179/1	R1/96	AL 5083-0	SINGLE "V"	PALMAS PIERO	9617723/2	S2
02	16179/2	R1/96	AL 5083-0	FILLET	PALMAS PIERO	9617723/2	S2
02	16179/3	R1/96	AL 5083-0	FILLET	PALMAS PIERO	9617723/2	S2

FOGLIO 1 DI 2 REV. 0 | DATA REV. 30-11-96 | FIRMA Biestro Alberto | DATA 30-11-96

SIMIC SPA
CAMERANA (CN)

QW-482

SPECIFICA PROCEDIMENTO DI SALDATURA
WELDING PROCEDURE SPECIFICATION

(WPS)

SOCIETA' / COMPANY NAME	SIMIC spa BY A.BIESTRO	SUPPORTO / SUPPORTING	PQR No R1/36 CERTIF N° 3617723/1
SPECIFICA PROC.SALDATURA / WELDING PROCEDURE SPECIF.	No 16179/1	CLIENTE / COSTOMERS	ANSALDO ENERGIA
REVISIONI / REVISION	0 DATA / DATE 30-11-96	COMMESSA / JOB	No 0004EM
PROCED.DI SALDATURA / WELDING PROCESS	GMAW	TIPO / TYPE	SEMIAUTOMATIC

QW-402-Joint

GIUNTI / JOINT: SINGLE "V"

DIS.DEL GIUNTO / JOINT DESIGN: SEE DETAILS

SUPPORTO / BACKING-YES/NO: YES

MATERIALE SUPP. / BACK.MATER.TYPE: WELD METAL

☐ METAL ☐ NO FUSING MET.

☐ NON METAL ☐ OTHER

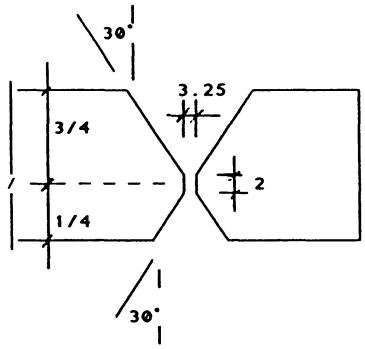

DETAILS

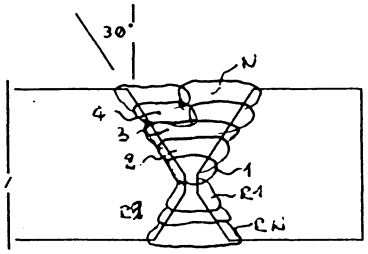

QW-403-Base Materials

PNo _____ GROUP _____ PNo _____ GROUP _____

SPECIFICATION / TYPE AND GRADE: AL 5083-0 TO AL 5083-0

CHEM.ANALYSIS/OR / MECCH.PROPRIETY:

GAMMA DI SPESSORI / THICKNESS RANGE : / BASE METAL-GROOVE: 4.76 to 200 mm FILLET: /

DIAM.TUBI GAMMA-SMUSSO / PIPE DIA.RANGE-GROOVE: > 220 mm FILLET: /

ALTRO / OTHER:

QW-404- Filler Metals	GMAW			
SPEC.No(SFA)	5.10			
AWS No(CLASS)	ER5356			
F-No No	1			
A-No No	6			
DIAM.METAL. D'APPORTO / SIZE OF FILLER METALS	1.2 mm			
METAL.D'APPORTO DEPOS. / DEPOSITED WELD METAL				
GAMMA DI SPESSORI / THICKNES RANGE:				
SMUSSO / GROOVE	200 MM			
SALD. D'ANGOLO / FILLET	N.A.			
FILO FLUSSO / ELECTRODE-FLUX(CLASS)	/			
DENOM.COMMERCIALE / FLUX TRADE NAM	ETC AL MG 5			
INSERTO CONSUMABILE / CONSUMABLE INSERT	NO			

QW-405-Positions

POSIZIONE SMUSSO POSITIONS GROOVE	1G
PROGRESSIONE SALD. WELDING PROGRESSION	N.A.
POS.SALD.D'ANGOLO POSITIONS OF FILLET	N.A.

QW-407-Postweld heat treatm.

GAMMA DI TEMP. TEMPERAT.RANGE	N.A.
TEMPO DI MANTENIMENTO TIME MAINTENANCE	N.A.
ALTRO OTHER	N.A.

QW-406-Preheat

TEMP.DI PRERISC.MIN. PREHEAT TEMP.MIN.	100°C
TEMP.DI INTERPASS MAX INTERPASS TEMPER. MAX	120 °C
MANTENIMENTO PRERISC. PREHEAT MANTENANCE	N.A

QW-408-Gas

	type gas	%composition mixture	flow rate lt/min.
PROTEZIONE SHIELDING	ARGON-ELIO	Ar70/30He	16%18
AGGIUNTIVO TRAILING	N.A	N.A.	N.A
ROVESCIO BACKING	N.A	N.A.	N.A

QW-409-Electrical Characteristics

CORRENTE C.A.o C.C
CURRENT A.C.o D.C. D.C

POLARITA'
POLARITY REVERSE

AMPERE (RANGE) 160 % 235

VOLTS (RANGE) 24 % 28

TIPO ELETTRODO DI TUNGSTENO
TUNGSTEN ELECTRODE SIZES AND TYPE N.A

CARATT.DELL'ARCO PER GMAW
MODE OF METAL TRANFER FOR GMAW SPRAY-ARC

GAMMA DI VELOCITA ALIMENT.FILO
ELECTRODE WIRE FEED SPEED RANGE N.A.

QW-410-Technique

PASSATA STRETTA O LARGA
STRING OR WEAWE BEAD STRING BEAD

DIMENSIONE UGELLO
ORIFICE OR GAS CAP SIZE 20 mm

PULIZIA FRA LE PASSATE
INITIAL AND INTERPASS CLEANING BRUSHING AND GRINDING

METODO DI RIPRESA AL ROVESCIO
METHOD OF BACK GOUGIN GRINDING TO SOUND METAL

OSCILLAZIONE-AMPIEZZA
OSCILLATION-AMPLITUDE N.A

FREQUENZA
FREQUENCY N.A

DISTANZA UGELLO DI CONTATTO -PEZZO
CONTACT TUBE TO WORK DISTANCE 25 mm

PASSATA SINGOLA O MULTIPLA(PER LATO)
SINGLE OR MULTIPLE PASS(FOR SIDE) MULTIPLE

elettrodo multiplo o singolo
multiple or single electrodes SINGLE

gamma di lavoro
travel speed (range) 20 % 31 cm/1'

martellatura
peening N.A

ALTRO
OTHER

STRATI DI SALDATURA WELD LAYERS	PROCED.DI SALDATURA WELDING PROCESS	METALLO D'APPORTO FILLER METAL CLASS A.W.S.	DIA.MM	CORRENTE CURRENT POLARITA	AMP. RANGE	VOLT.RANGE	GAMMA DI LAVORO TRAVEL SPEED RANGE cm/1'	ALTRO OTHER
1	GMAW	ER5356	1.2	REVERSE	160 - 170	24 - 25	22 - 23	
2	GMAW	ER5356	1.2	REVERSE	185 - 190	26 - 27	20 - 21	
3	GMAW	ER5356	1.2	REVERSE	230 - 235	26 - 27	27 - 28	
4 % N	GMAW	ER5356	1.2	REVERSE	220 - 225	27 - 28	22 - 25	
R1	GMAW	ER5356	1.2	REVERSE	220 - 225	27 - 28	30 - 31	
R2 % RN	GMAW	ER5356	1.2	REVERSE	220 - 225	27 - 28	22 - 23	

SIMIC SPA
CAMERANA (CN)

QW-482

SPECIFICA PROCEDIMENTO DI SALDATURA
WELDING PROCEDURE SPECIFICATION

(WPS)

SOCIETA' / COMPANY NAME: SIMIC spa — BY: A.BIESTRO

SUPPORTO / SUPPORTING PQR No: 21/96 CERT. N° 3617723/1

SPECIFICA PROC.SALDATURA / WELDING PROCEDURE SPECIF. No: 16179/2

CLIENTE / COSTOMERS: ANSALDO ENERGIA

REVISIONI / REVISION: 0 — DATA / DATE: 30-11-96

COMMESSA / JOB No: 0004EM

PROCED.DI SALDATURA / WELDING PROCESS: GMAW

TIPO / TYPE: SEMIAUTOMATIC

QW-402-Joint

GIUNTI / JOINT: FILLET

DIS.DEL GIUNTO / JOINT DESIGN: SEE DETAILS

SUPPORTO / BACKING-YES/NO: YES

MATERIALE SUPP. / BACK.MATER.TYPE: BASE METAL

☐ METAL ☐ NO FUSING MET.

☐ NON METAL ☐ OTHER

DETAILS

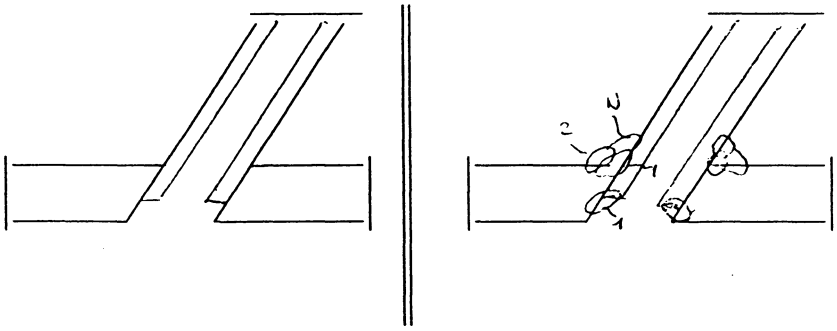

QW-403-Base Materials

PNo: ____ GROUP: ____ PNo: ____ GROUP: ____

SPECIFICATION / TYPE AND GRADE: AL 5083-0 TO AL 5083-0

CHEM.ANALYSIS/OR / MECCH.PROPRIETY:

GAMMA DI SPESSORI / THICKNESS RANGE: BASE METAL-GROOVE: N.A. FILLET: ALL

DIAM.TUBI GAMMA-SMUSSO / PIPE DIA.RANGE-GROOVE: N.A. FILLET: ALL

ALTRO / OTHER:

QW-404- Filler Metals	GMAW			
SPEC.No(SFA)	5.10			
AWS No(CLASS)	ER5356			
F-No No	1			
A-No No	6			
DIAM.METAL. D'APPORTO / SIZE OF FILLER METALS	1.2 mm			
METAL.D'APPORTO DEPOS. / DEPOSITED WELD METAL				
GAMMA DI SPESSORI / THICKNES RANGE: SMUSSO / GROOVE	N.A.			
SALD. D'ANGOLO / FILLET	ALL			
FILO FLUSSO / ELECTRODE-FLUX(CLASS)	/			
DENOM.COMMERCIALE / FLUX TRADE NAM	ETC AL MG 5			
INSERTO CONSUMABILE / CONSUMABLE INSERT	NO			

QW-405-Positions

POSIZIONE SMUSSO POSITIONS GROOVE	N.A.
PROGRESSIONE SALD. WELDING PROGRESSION	N.A.
POS.SALD.D'ANGOLO POSITIONS OF FILLET	1F

QW-407-Postweld heat treatm.

GAMMA DI TEMP. TEMPERAT.RANGE	N.A.
TEMPO DI MANTENIMENTO TIME MAINTENANCE	N.A.
ALTRO OTHER	N.A.

QW-406-Preheat

TEMP.DI PRERISC.MIN. PREHEAT TEMP.MIN.	100°C
TEMP.DI INTERPASS MAX INTERPASS TEMPER. MAX	120 C
MANTENIMENTO PRERISC. PREHEAT MANTENANCE	N.A

QW-408-Gas

	type gas	%composition mixture	flow rate lt/min.
PROTEZIONE SHIELDING	ARGON-ELIO	Ar70/30He	16%18
AGGIUNTIVO TRAILING	N.A	N.A.	N.A
ROVESCIO BACKING	N.A	N.A.	N.A

QW-409-Electrical Characteristics

CORRENTE C.A.o C.C
CURRENT A.C.o D.C. D.C

POLARITA'
POLARITY REVERSE

AMPERE (RANGE) 160 % 235

VOLTS (RANGE) 24 % 28

TIPO ELETTRODO DI TUNGSTENO
TUNGSTEN ELECTRODE SIZES AND TYPE N.A

CARATT.DELL'ARCO PER GMAW
MODE OF METAL TRANFER FOR GMAW SPRAY-ARC

GAMMA DI VELOCITA ALIMENT.FILO
ELECTRODE WIRE FEED SPEED RANGE 500 cm/1'

QW-410-Technique

PASSATA STRETTA O LARGA
STRING OR WEAWE BEAD STRING BEAD

DIMENSIONE UGELLO
ORIFICE OR GAS CAP SIZE 20 mm

PULIZIA FRA LE PASSATE
INITIAL AND INTERPASS CLEANING BRUSHING AND GRINDING

METODO DI RIPRESA AL ROVESCIO
METHOD OF BACK GOUGIN N.A.

OSCILLAZIONE-AMPIEZZA
OSCILLATION-AMPLITUDE N.A

FREQUENZA
FREQUENCY N.A

DISTANZA UGELLO DI CONTATTO -PEZZO
CONTACT TUBE TO WORK DISTANCE 25 mm

PASSATA SINGOLA O MULTIPLA(PER LATO)
SINGLE OR MULTIPLE PASS(FOR SIDE) MULTIPLE

elettrodo multiplo o singolo
multiple or single electrodes SINGLE

gamma di lavoro
travel speed (range) 20 % 31 cm/1'

martellatura
peening N.A

ALTRO
OTHER NO

STRATI DI SALDATURA WELD LAYERS	PROCED.DI SALDATURA WELDING PROCESS	METALLO D'APPORTO FILLER METAL CLASS A.W.S.	DIA.MM	CORRENTE CURRENT POLARITA	AMP. RANGE	VOLT.RANGE	GAMMA DI LAVORO TRAVEL SPEED RANGE cm/1'	ALTRO OTHER
1	GMAW	ER5356	1.2	REVERSE	230 - 235	26 - 27	27 - 28	
2 % N	GMAW	ER5356	1.2	REVERSE	220 - 225	27 - 28	22 - 25	

SIMIC SPA
CAMERANA (CN)

QW-482

SPECIFICA PROCEDIMENTO DI SALDATURA
WELDING PROCEDURE SPECIFICATION

(WPS)

SOCIETA' / COMPANY NAME: SIMIC spa — BY: A.BIESTRO

SUPPORTO / SUPPORTING: PQR No 21/36 GEN. 3617723/1

SPECIFICA PROC.SALDATURA / WELDING PROCEDURE SPECIF. No: 16179/3

CLIENTE / COSTOMERS: ANSALDO ENERGIA

REVISIONI / REVISION: 0 — DATA / DATE: 30-11-96

COMMESSA / JOB No: 0004EM

PROCED.DI SALDATURA / WELDING PROCESS: GMAW

TIPO / TYPE: SEMIAUTOMATIC

QW-402-Joint

GIUNTI / JOINT: FILLET

DIS.DEL GIUNTO / JOINT DESIGN: SEE DETAILS

SUPPORTO / BACKING-YES/NO: YES

MATERIALE SUPP. / BACK.MATER.TYPE: BASE METAL

☐ METAL ☐ NO FUSING MET.

☐ NON METAL ☐ OTHER

DETAILS

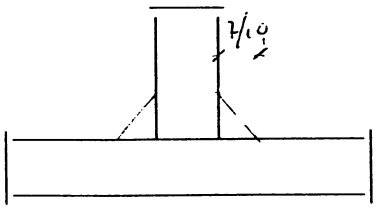

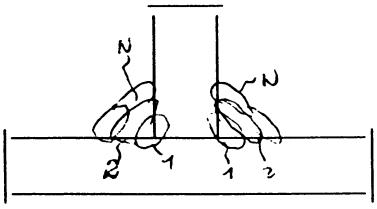

QW-403-Base Materials

PNo: — GROUP: — PNo: — GROUP:

SPECIFICATION / TYPE AND GRADE: AL 5083-0 — TO: AL 5083-0

CHEM.ANALYSIS/OR / MECCH.PROPRIETY:

GAMMA DI SPESSORI / THICKNESS RANGE / BASE METAL-GROOVE: N.A. — FILLET: ALL

DIAM.TUBI GAMMA-SMUSSO / PIPE DIA.RANGE-GROOVE: N.A. — FILLET: ALL

ALTRO / OTHER:

QW-404- Filler Metals

QW-404- Filler Metals	GMAW			
SPEC.No(SFA)	5.10			
AWS No(CLASS)	ER5356			
F-No No	1			
A-No No	6			
DIAM.METAL. D'APPORTO / SIZE OF FILLER METALS	1.2 mm			
METAL.D'APPORTO DEPOS. / DEPOSITED WELD METAL — GAMMA DI SPESSORI / THICKNES RANGE: SMUSSO / GROOVE	N.A.			
SALD. D'ANGOLO / FILLET	ALL			
FILO FLUSSO / ELECTRODE-FLUX(CLASS)	/			
DENOM.COMMERCIALE / FLUX TRADE NAM	ETC AL MG 5			
INSERTO CONSUMABILE / CONSUMABLE INSERT	NO			

QW-405-Positions

POSIZIONE SMUSSO POSITIONS GROOVE	N.A.
PROGRESSIONE SALD. WELDING PROGRESSION	N.A.
POS.SALD.D'ANGOLO POSITIONS OF FILLET	1F

QW-407-Postweld heat treatm.

GAMMA DI TEMP. TEMPERAT.RANGE	N.A.
TEMPO DI MANTENIMENTO TIME MAINTENANCE	N.A.
ALTRO OTHER	N.A.

QW-406-Preheat

TEMP.DI PRERISC.MIN. PREHEAT TEMP.MIN.	100°C
TEMP.DI INTERPASS MAX INTERPASS TEMPER. MAX	120°C
MANTENIMENTO PRERISC. PREHEAT MANTENANCE	N.A

QW-408-Gas

	type gas	%composition mixture	flow rate lt/min.
PROTEZIONE SHIELDING	ARGON-ELIO	Ar70/30He	16%18
AGGIUNTIVO TRAILING	N.A	N.A.	N.A
ROVESCIO BACKING	N.A	N.A.	N.A

QW-409-Electrical Characteristics

CORRENTE C.A.o C.C CURRENT A.C.o D.C.	D.C	POLARITA' POLARITY	REVERSE
AMPERE (RANGE)	160 % 235	VOLTS (RANGE)	24 % 28
TIPO ELETTRODO DI TUNGSTENO TUNGSTEN ELECTRODE SIZES AND TYPE	N.A		
CARATT.DELL'ARCO PER GMAW MODE OF METAL TRANFER FOR GMAW	SPRAY-ARC		
GAMMA DI VELOCITA ALIMENT.FILO ELECTRODE WIRE FEED SPEED RANGE	500 cm/1'		

QW-410-Technique

PASSATA STRETTA O LARGA STRING OR WEAWE BEAD	STRING BEAD		
DIMENSIONE UGELLO ORIFICE OR GAS CAP SIZE	20 mm		
PULIZIA FRA LE PASSATE INITIAL AND INTERPASS CLEANING	BRUSHING AND GRINDING		
METODO DI RIPRESA AL ROVESCIO METHOD OF BACK GOUGIN	N.A.		
OSCILLAZIONE-AMPIEZZA OSCILLATION-AMPLITUDE	N.A	FREQUENZA FREQUENCY	N.A
DISTANZA UGELLO DI CONTATTO -PEZZO CONTACT TUBE TO WORK DISTANCE	25 mm		
PASSATA SINGOLA O MULTIPLA(PER LATO) SINGLE OR MULTIPLE PASS(FOR SIDE)	MULTIPLE		
elettrodo multiplo o singolo multiple or single electrodes	SINGLE		
gamma di lavoro travel speed (range)	20 % 31 cm/1'		
martellatura peening	N.A		
ALTRO OTHER	NO		

STRATI DI SALDATURA WELD LAYERS	PROCED.DI SALDATURA WELDING PROCESS	METALLO D'APPORTO FILLER METAL CLASS A.W.S.	DIA.MM	CORRENTE CURRENT POLARITA	AMP. RANGE	VOLT.RANGE	GAMMA DI LAVORO TRAVEL SPEED RANGE cm/1'	ALTRO OTHER
1	GMAW	ER5356	1.2	REVERSE	230 - 235	26 - 27	27 - 28	
2 % N	GMAW	ER5356	1.2	REVERSE	220 - 225	27 - 28	22 - 25	

Copia pratica
96/17723/IN

REGISTRO ITALIANO NAVALE

QW - 483 PROCEDURE QUALIFICATION RECORD (PQR)

CERTIFICATE No. 96/17723/1

COMPANY NAME **SIMIC S.P.A. CAMERANA (CN)**

PROCEDURE QUALIFICATION RECORD No. **R01/96** DATED **28/11/96**

WPS No. **01/96** DATED **14/11/96**

WELDING PROCESS (ES) **GMAW**

TYPE(S) **SEMIAUTOMATIC**

JOINTS (QW-402)

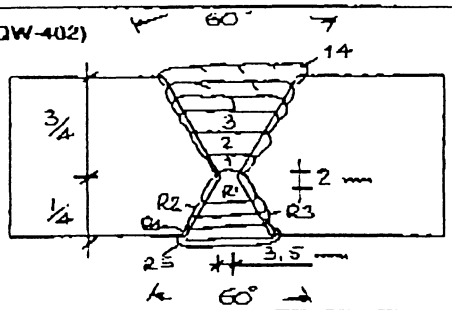

1st pass: 160-165A; 24V; 22-23 cm/1'
2nd pass: 185-190A; 27V; 20-21 cm/1'
3rd pass: 230-235A; 27V; 27-28 cm/1'
4th to 14th pass: 220-225A; 27V; 22-23 cm/1'
"R1" pass: 220-225A; 27V; 30-31 cm/1'
"R2" to "R3" pass: 220-225A; 27V; 22-23 cm/1'
"R4" to "R5" pass: 220-225A; 27V; 20-21 cm/1'

BASE METAL (QW-403)
Material Spec. SB 221
Type or Grade 5083 H111
P. No. 25 Gr. N.A. to P. No. 25 Gr. N.A.
Thickness 40 mm
Diameter N.A.
Other

FILLER METALS (QW-404)
Weld Metal Analysis A No. N.A.
Size of Electrode 1.2 mm
Filler Metal F No. 22
SFA Specification 5.10
AWS Classification ER5356
Other Trade name: ETC AlMG5 (Elettrotecnochimica)

POSITION (QW-405)
Position of groove 1G
Weld Progression N.A.
Other

PREHEAT (QW-406)
Preheat Temp. min. 100 °C
Interpass Temp. max. 120 °C
Other

POSTWELD HEAT TREATMENT (QW-407)
Temperature None
Time
Other

GAS (QW-408)
Type of Gas or Gases Mixture
Composition of Gas mixture 70%Ar + 30%He ; Flow rate: 16l/1'
Gas backing None

ELECTRICAL CHARACTERISTICS (QW-409)
Current Direct
Polarity Reverse (Pulded power welding)
Amps. See table Volts See table
Other

TECHNIQUE (QW-410)
Travel Speed See table
String or Weave Bead String and weave
Oscillation N.A.
Multipass or Single pass Multipass
Single or Multiple Electrodes Single
Other
Back gouging to sound metal before back weld
(depth 4-5 mm)

CERTIFICATE No. 96/17723/1

TENSILE TEST (QW-150)

Specimen No.	Width mm	Thickness mm	Area mm2	Total load N	U. T. S. N/mm2	Character of Failure & Location
T1	19.0	38.5	731.5	212600	291	Ductile in weld
T2	18.7	38.9	727.4	219500	302	Ductile in weld

GUIDED BEND TEST (QW-160)

Type and figure No	Result
Side (QW 462.2) 4 Off	Satisfactory

RX Examination : Satisfactory

Welder's name: PALMAS PIERO

Stamp. No.:

Welding Test conducted by: SIMIC S.P.A. Camerana (CN)

Mechanical test conducted by: S.S.M. GE/Bolzaneto

Laboratory test No.: 2769

at presence of RINA Surveyor: SILVIO ARIMONDO

We certify that the statements in this record are correct and that the test welds were prepared, welded and tested in accordance with the requirements of Section IX of the ASME Code

Genova, 09/12/1996

REGISTRO ITALIANO NAVALE

REGISTRO ITALIANO NAVALE

RECORD OF WELDER QUALIFICATION TEST

N. 96/17723/2

Welder name PALMAS PIERO Clock No. / Stamp. No. /
Welding process used GMAW Type SEMIAUTOMATIC
Identification of WPS used by welder during welding of test coupon 1/96
Base material(s) welded SB 221 5083 H111 Thickness mm 40 mm

WELDING VARIABLES (QW - 350)	Actual values	Range qualified
Backing (QW - 402)	Weld metal	With backing
ASME P-No. to ASME P-No. (QW - 403)	25 to 25	21 through 25
(x) Plate ( ) Pipe (enter diameter, if pipe)	N.A.	Over 76 mm
Filler metal specification (SFA) (QW - 404)	5.10	5.10
Filler metal F-No. (QW - 404)	22	22
AWS Classification (QW - 404)	ER5356	ERxxxx
Weld deposit (mm)	40 mm	Unlimited
Welding position (QW - 405)	1G	1G-1F
Progression	N.A.	N.A.
Backing gas for GTAW, PAW, GMAW; fuel gas for OFW	No	With and without
Consumable insert for GTAW or PAW	N.A.	N.A.
GMAW transfer mode (QW - 409)	Pulsed	Spray and pulsed
GTAW welding current type / polarity	N.A.	N.A.

TEST RESULTS

Guided Bend test (QW 462.2 - QW 462.3 (a) and (b))

Type and fig. No.	Results
Side (QW 462.2) 4 Off	Satisfactory

Visual examination (QW - 302.4) Satisfactory
Radiographic (QW - 304) Satisfacury
Welding test conducted by SIMIC SPA
Mechanical test conducted by S.S.M GE/Bolzaneto Laboratory test No. 2769

We certify that the statements in this record are correct and that the test welds were prepared, welded and tested in accordance with the requirements of section IX of the ASME Code.

Issued at Genova the 09/12/1996 REGISTRO ITALIANO NAVALE

CYLINDER

PAGES 14

ANSALDO

Ansaldo Energia spa

Via N. Lorenzi 8, 16152 Genova GE Italia
Tel. (010) 6551, Fax 010 6556209, Telex 270006, C.P. 4657
Cod. Fisc. n. 00734630155, P.IVA n. 03279700102,
C.C.I.A.A. n. 320959 Genova, Iscr. Trib. Genova n. 55719
Sede Legale a Genova, Capitale L. 205.000.000.000.

TRASMISSIONE DOCUMENTI
Transmittal
No. 146

FOGLIO *Sheet* 1 DI *of*

DATA *Date* 16/12/96

MODULO TRASMISSIONE DOCUMENTI
TRANSMITTAL FORM

DESTINATARIO *To*: Ansaldo Energia PHA

COPIA A *Copy to*: Ing. Gall.

ALL'ATTENZIONE DI *Attention*: Dott. Valente

ALL'ATTENZIONE DI *Attention*:

ORDINE CLIENTE *Customer order*:

IMPIANTO *Plant*: BABAR

OGGETTO *Object*: Cilindro supporto solenoide

ORDINE ANSALDO COMP. *Ansaldo Comp. order*:

COMMESSA *Job nr.*: 0004EM

POS. *Item*	N. DOCUMENTO *Document nr.*	REV/DATA *Rev/date*	TITOLO DOCUMENTO *Document title*	(1)	(2)	(3)
01	CC 2139/96.01	0	CSC - Dichiarazione di conform	C	I	
02	DCR 13118	9/10/96	Controllo dimensionale del cilindro fornito da CSC	C	I	
03	DCR 13134	28/11	Controllo dimens. dopo la sald. tubi - primi e dopo calibr. della CSC -	C	I	
04	DCR 13135	29/11	Controllo dopo calibr. Ansaldo	C	I	
05	DCR 13136	03/12	Controllo " " Ansaldo	C	I	
06	DCR 13122	11/12	" dopo lavorazione finale	C	I	
07	HEC 10612	11/10	Rapporto T.T.	C	I	
08	HEC 10614	18/11	" T.T.	C	F	

(1) TIPO DI DOCUMENTO *Document type*
- D — Disegno - *Drawing*
- S — Specifica - *Specification*
- P — Procedure - *Procedure*
- O — Ordine - *Order*
- C — Certificazione - *Reports*
- — _____

(2) MOTIVAZIONE INVIO *Submission code*
- A — Approvazione - *Approval*
- I — Informazione - *Information*
- R — Restituzione - *Restitution*
- RI — Richiesta - *Request*
- CO — Commenti - *Comments*

(3) TIPO DI COPIA *Copy type*
- OR — Originale - *Original*
- CR — Copia riproducibile - *Reproducible copy*
- CX — Copia - *Paper copy*
- MF — Microfilm - *Microfilm*
- — _____
- — _____

NOTE *Notes*

Ansaldo Energia spa

UNITÀ EMITTENTE *Issuing unit*: TEFA

Ansaldo Energia s.p.a.
Viale Sarca, 336
20126 MILANO

☒ SI PREGA DI RESTITUIRE COPIA DEL PRESENTE DOCUMENTO FIRMATA PER RICEVUTA.
Please send back copy of the present document signed as receipt

COPIE INTERNE *Internal copies to*

58288 5005

DESTINATARIO

C.S.C. S.p.A.
Schio (VI) ITALY

QUALITY SYSTEM DOCUMENT

Document n. CC. 2139/96.01

Sheet 1 of 1 | Rev. 0

DICHIARAZIONE DI CONFORMITA'
CERTIFICATE OF CONFORMITY

Cliente / *Customer*: ANSALDO

Ordine Cliente / Data / *Purchase Order / Date*: BC176344

N° Bolla di spedizione / data / *No Consignement note / date*:

No Pezzi / *No Pieces*	Descrizione / *Description*	Matricola / Disegno / *Serial / Drawing*	Commessa / *Job order*
1	CILINDRO ALLUMINIO BABAR		2139
	SR. 2139/96.01 (CSC)		
	620RM07273 Rev. 0		

SULLA BASE DEI NOSTRI CONTROLLI EFFETTUATI PRIMA DELLA SPEDIZIONE DICHIARIAMO CHE I PRODOTTI SOPRA MENZIONATI SONO CONFORMI ALLE PRESCRIZIONI DELL'ORDINE E DEI RELATIVI DISEGNI.

UNDER THE BASIS OF OUR CONTROL MADE BEFORE DESPATCH WE CERTIFY THAT THE HEREIN PRODUCTS CONFORM WITH ALL REQUIREMENTS SPECIFIED IN THE ORDER AND WITH ALL RELEVANT DRAWINGS.

Responsabile controllo / *Chief Inspector*: [signature]

Data / *Date*: 9/10/96

ANSALDO Componenti Area Milano	Controllo dimensionale / Dimensional check	DCR 13118 Foglio / Sheet 1 di / of 2

COMMESSA / Job	CLIENTE / Customer	IMPIANTO / Plant	DOC. RIF. / Ref. doc.	Item	REV.
0004 EM	ANSALDO - GE				

Oggetto / Object: CILINDRO SUPPORTO SOLENOIDE

Disegno / Drawing: SK 2139 56.1 CSC 620 RM 07 243 fig

Stadio di lavorazione / Working step:

Esame secondo / Check according to:

Controllo / Control			
Eseguito da / Performed by		Località / Place of test	Data / Date
1	BIFFI	ANSALDO MI	9/10/96
	MELZI		9/10/96

Data emissione certificato / Date issuing certificate:

Vista dal lato LS

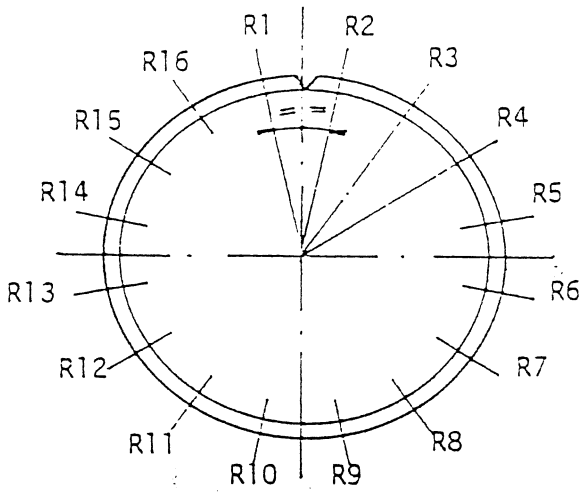

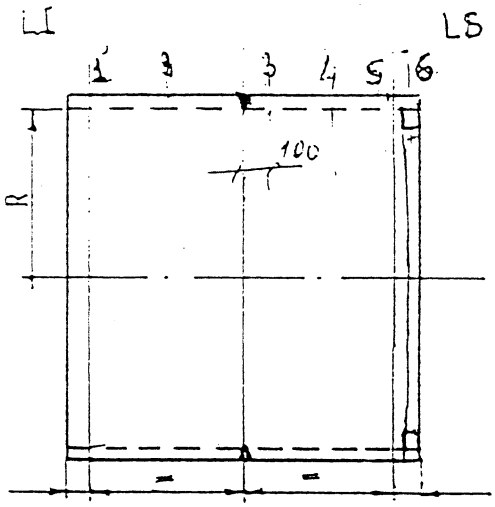

DIAMETRO INTERNO	TOLLER. DIAM.	SVILUPPO VIROLA	OVALITA' AMMESSA	

	Lt	Dm	R1 / R9	R2 / R10	R3 / R11	R4 / R12	R5 / R13	R6 / R14	R7 / R15	R8 / R16	O
1			1549.5	1547.5	1546	1544	1544	1544.5	1546	1546.5	7
			1547	1545.5	1544	1545.5	1547	1547	1549	1551	
2			1549	1547	1546	1545	1544.5	1545	1545.5	1546	6
			1546	1544.5	1544	1546.5	1547	1547	1549.5	1550	
3			1548.5	1547.5	1546.5	1546	1545.5	1545	1545	1545	5
			1545	1544	1545	1547.5	1547	1547	1549	1549	

APPROVAZIONE / Approvals	ANSALDO Componenti				ISPETTORE / Inspectors		
	NOME / Name	UFFICIO / Office	FIRMA / Signature	DATA / Date	CLIENTE/AGENZIA / Customer/Agency	FIRMA / Signature	DATA / Date
	MELZI	—	[signature]	9/10/96			

B 050.01 IE/03

ANSALDO Componenti Area Milano	Controllo dimensionale / Dimensional check	DCR 13118 Foglio / Sheet 2 di / of 2

COMMESSA / Job	CLIENTE / Customer	IMPIANTO / Plant	DOC. RIF. / Ref. doc.	Item	REV.

Oggetto / Object

Disegno / Drawing _____ fig _____

Stadio di lavorazione / Working step

Esame secondo / Check according to

Controllo / Control		
Eseguito da / Performed by	Località / Place of test	Data / Date

Data emissione certificato / Date issuing certificate

Vista dal lato LS

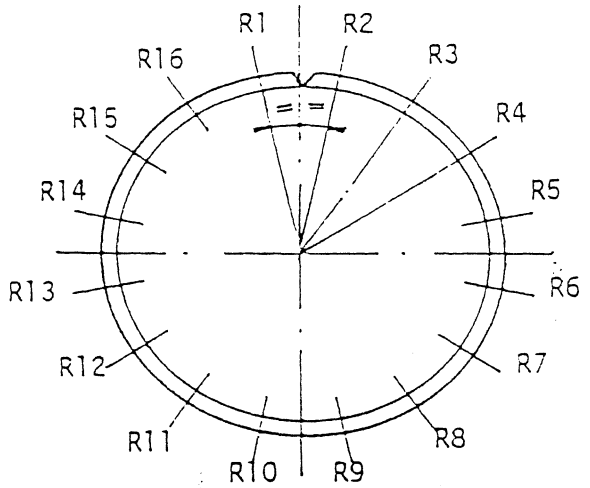

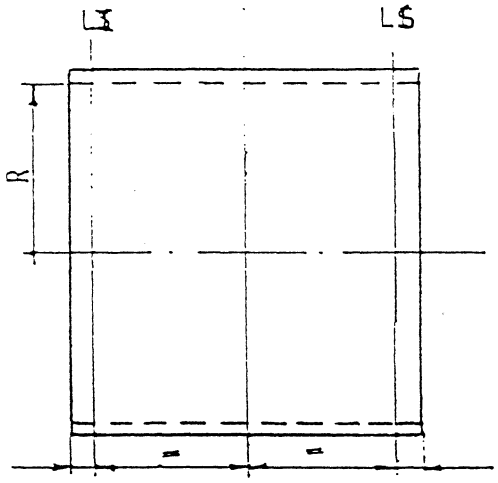

DIAMETRO INTERNO	TOLLER. DIAM.	SVILUPPO VIROLA	OVALITA' AMMESSA	

	Lt	Dm	R1 / R9	R2 / R10	R3 / R11	R4 / R12	R5 / R13	R6 / R14	R7 / R15	R8 / R16	O
4			1547	1547,5	1546,5	1547	1546	1545	1544	1544,5	5,5
			1543,5	1544	1546	1546	1546,5	1547	1549	1548	
5			1547	1548	1548	1548	1547	1545	1545	1547	6
			1547	1545	1544	1545	1547	1547,5	1550	1549	
6			1503,5	1503	1501,5	1501	1500,5	1500,5	1501,5	1503	5
			1502	1500	1498,5	1499	1501	1502,5	1503	1503,5	

Ø 7,5

APPROVAZIONE / Approvals	ANSALDO Componenti				ISPETTORE / Inspectors		
	NOME / Name	UV.PhO NDE Lev.	FIRMA / Signature	DATA / Date	CLIENTE / AGENZIA / Customer / Agency	FIRMA / Signature	DATA / Date

B 059.01 IE/02

ANSALDO Ansaldo Energia s.p.a. Stabilimento MILANO	CONTROLLO DIMENSIONALE DIMENSIONAL CHECK	DCR 13134 FOGLIO Sheet 1 DI Of 1

COMMESSA/JOB	CLIENTE/CUST.	IMPIANTO/PLANT	DOC. RIF./REF. DOC	REV.	ITEM
0004EM	ANSALDO	BABAR	CICLO TEFA	01	120

OGGETTO / Object: SOLENOID SUPPORT CYLINDER

DISEGNO / Drawing: 620 RM 07009 rev B

STADIO DI LAVORAZ. / Working step: AFTER TUBES WELDING - BEFORE AND AFTER CALIBRATION ON BEHALF OF C&C

ESAME SECONDO / Check according to: DISEGNO / DRAWING

CONTROLLO / Control

ESEGUITO DA Performed by	LOCAL. Place	DATA Date
BIFFI		19-11-96
MELZI		28-11-96

DATA EMISS. CERTIF. / Date issuing certificate

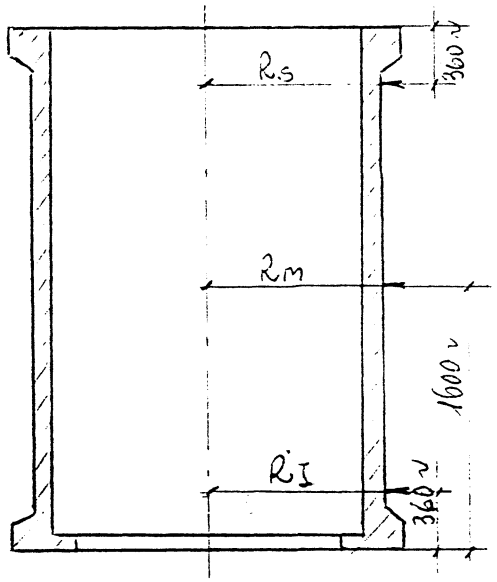

	BEFORE CALIBRATION			AFTER CALIBRATION		
	RI	Rm	Rs	RI	Rm	Rs
0°	1588,6	1587,6	1587,4	1587,9	1587,6	1587,5
45°	1585,0	1585,3	1585,3	1585,2	1585,4	1585,3
90°	1587,9	1588,1	1588,5	1587,4	1587,7	1588,0
135°	1591,1	1590,9	1590,5	1589,7	1589,8	1590,0
180°	1587,7	1587,7	1587,5	1587,9	1587,9	1587,9
225°	1584,9	1585,1	1585,2	1586,2	1586,3	1586,2
270°	1587,8	1588,1	1588,0	1588,6	1589,0	1588,8
315°	1589,7	1589,7	1589,9	1589,4	1589,7	1590,0

ANSALDO ENERGIA s.p.a.-Stabilimento MILANO			ISPETTORI/Inspectors		
NOME Name	FIRMA Signature	DATA Date	CLIENTE/AGENZIA Customer/Agency	FIRMA Signature	DATA Date
MELZI	[signature]	28-11-96			

ANSALDO Ansaldo Energia s.p.a. Stabilimento MILANO	CONTROLLO DIMENSIONALE DIMENSIONAL CHECK	DCR 13135 FOGLIO Sheet 1 DI Of 1

COMMESSA/JOB	CLIENTE/CUST.	IMPIANTO/PLANT	DOC. RIF./REF. DOC	REV.	ITEM
000H EM	ANSALDO	BABAR	CICLO TEFA	01	120

OGGETTO Object	CONTROLLO Control		
SOLENOID SUPPORT CYLINDER RILIEVO DIMENSIONI INTERNE	ESEGUITO DA Performed by	LOCAL. Place	DATA Date
	MELZI	ANSALDO	28-11-96
DISEGNO Drawing 620 RM 07009 rev. B			
STADIO DI LAVORAZ. Working step DOPO CALIBRATURA ANSALDO I FASE			
ESAME SECONDO Check according to DISEGNO	DATA EMISS. CERTIF. Date issuing certificate		

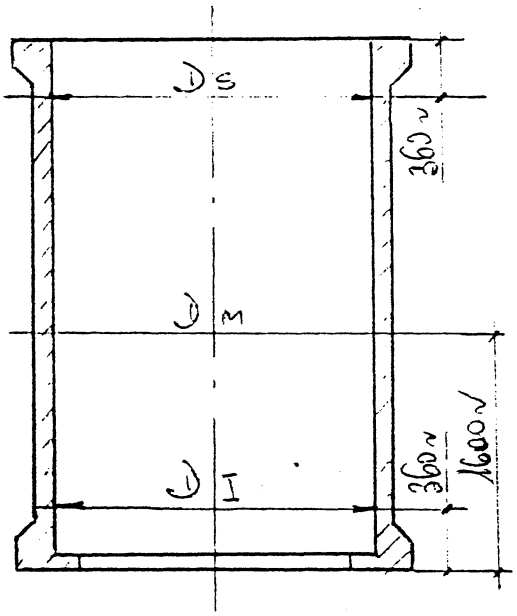

	Ds	Dm	DI
0°/180°	3090,80	3092,50	3094,35
45/225°	3093,35	3088,50	3090,00
90°/270°	3099,30	3093,35	3093,75
135°/315°	3095,70	3096,20	3100,20

ANSALDO ENERGIA s.p.a.-Stabilimento MILANO			ISPETTORI/Inspectors		
NOME Name	FIRMA Signature	DATA Date	CLIENTE/AGENZIA Customer/Agency	FIRMA Signature	DATA Date
MELZI	[signature]	29/11/96			

ANSALDO Ansaldo Energia s.p.a. Stabilimento MILANO	CONTROLLO DIMENSIONALE DIMENSIONAL CHECK	DCR 13136 FOGLIO Sheet 1 DI Of 1

COMMESSA/JOB	CLIENTE/CUST.	IMPIANTO/PLANT	DOC. RIF./REF. DOC	REV.	ITEM
0004 EM	ANSALDO	BABAR	CICLO TEFA	01	120

OGGETTO / Object: SOLENOID SUPPORT CYLINDER
RILIEVO DIMENSIONI INTERNE

DISEGNO / Drawing: 620 RIM 07009 rev. B

STADIO DI LAVORAZ. / Working step: DOPO CALIBRATURA ANSALDO III FASE

ESAME SECONDO / Check according to: DISEGNO

CONTROLLO / Control

ESEGUITO DA / Performed by	LOCAL. / Place	DATA / Date
MELZI	ANSALDO	02/12/96
BIFFI		02/12/96

DATA EMISS. CERTIF. / Date issuing certificate

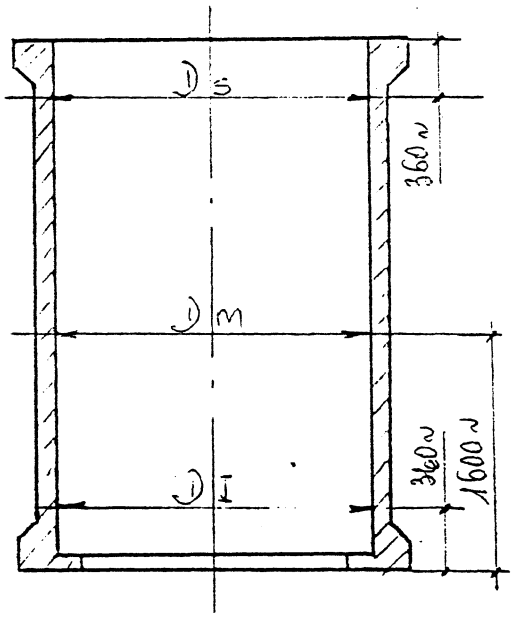

USCITA PISTONE MARTINETTO		Ds	Dm	DI
SUPER. 65 mm	0°/180°	3091,00	3092,20	3094,70
	45°/225°	3096,00	3091,00	3094,10
INFER. 55 mm	90°/270°	3099,15	3093,00	3093,30
	135°/315°	3092,90	3093,65	3097,05
SUPER. 73 mm	0°/180°	3090,90	3092,00	3094,50
	45°/225°	3096,00	3091,90	3095,20
INFER. 63 mm	90°/270°	3099,20	3093,20	3093,30
	135°/315°	3092,15	3092,85	3096,30

ANSALDO ENERGIA s.p.a.-Stabilimento MILANO			ISPETTORI/Inspectors		
NOME Name	FIRMA Signature	DATA Date	CLIENTE/AGENZIA Customer/Agency	FIRMA Signature	DATA Date
MELZI	[illegible]	13/12/96			

ANSALDO Ansaldo Energia s.p.a. Stabilimento MILANO	CONTROLLO DIMENSIONALE DIMENSIONAL CHECK	DCR 13122 FOGLIO Sheet 1 DI Of 1

COMMESSA/JOB	CLIENTE/CUST.	IMPIANTO/PLANT	DOC. RIF./REF. DOC	REV.	ITEM
0004 EM	ANSALDO PMA	BABAR	CICLO TEFA ITEM 150	01	150

OGGETTO Object	SOLENOID SUPPORT CYLINDER DIMENSIONAL CHECK	CONTROLLO Control	
		ESEGUITO DA Performed by	LOCAL. Place / DATA Date
		BIFFI	ANSALDO MI 11/12/96
DISEGNO Drawing	620 RM 07009 Rev. D	MELZI	"
STADIO DI LAVORAZ. Working step	AFTER FINAL MACHINING		
ESAME SECONDO Check according to	DRAWING	DATA EMISS. CERTIF. Date issuing certificate	

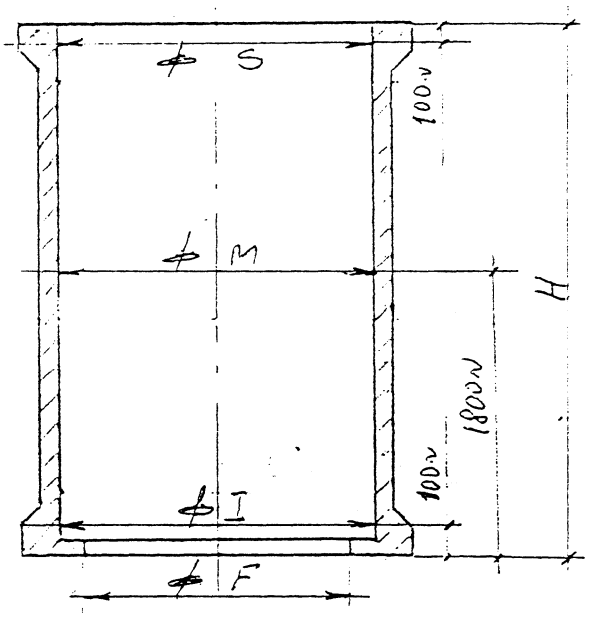

	ϕI	ϕM	ϕS	ϕF (3017.6±1)	H (3588,5±0,5)
0°/180°	3104,25	3103,45	3102,60	3017,6	3588,6
45°/225°	3104,95	3104,50	3104,15		
90°/270°	3103,80	3105,25	3105,85		
135°/315°	3103,40	3104,15	3104,75		

MEASURING EQUIPMENTS

1B/88 FLAT BLOCK mm 1000
1B/87 FLAT BLOCK mm 900
1B/84 FLAT BLOCK mm 700
1B/80 FLAT BLOCK mm 500
1B/222 MICROMETER

ANSALDO ENERGIA s.p.a.-Stabilimento MILANO			ISPETTORI/Inspectors		
NOME Name	FIRMA Signature	DATA Date	CLIENTE/AGENZIA Customer/Agency	FIRMA Signature	DATA Date
MELZI	[signature]	11/12/96			

ANSALDO Ansaldo Energia s.p.a. Stabilimento MILANO	RAPPORTO TRATTAMENTO TERMICO Heat Treatment report	HEC 10612 FOGLIO Sheet 1 DI Of 1

COMMESSA/JOB	IMPIANTO/PLANT	CLIENTE/CUST.	DOC. RIF./REF. DOC	REV.	ITEM
0004EH	BABAR	ANSALDO PHA	CICLO TEFA	0	10

OGGETTO Object: SOLENOID SUPPORT CYLINDER

POST WELD HEAT TREATMENT

DISEGNO Drawing	FIG/POS FIG/Item	REV Rev	COMPLESSO/Assembly
620RH07009	1 ÷ 3	B	

STADIO DI LAVORAZ. Working step: BEFORE MACHINING

STAMPIGLIATURE/MARCATURE Stampings/Marks: /

TRATTAMENTO TERMICO Heat Treatment

ESEGUITO DA Performed by	LOCALITÀ Place	DATA Date
MANDELLI	ANSALDO E. HI	10-10-96

SPECIFICA APPLICABILE/Applicable specification: HTP 009 — REV. Rev. 0

DATA EMISSIONE RAPPORTO Report issue date: /

HFO N°: 1541

TIPO DI TRATT. TERMICO Heat Treatment Type: P. W. H. T.

FORNO Furnace: WISTRA 1

COMBUSTIBILE Fuel: METHANE

TERMOCOPPIE TIPO Termocouples: NI CR NI

IDENTIFICAZIONE Identification: 4(2H64), 5(2H63)

REGISTRATORE Recorder: 2H12

IDENTIFICAZIONE Identification: 3-3734685

NOTE Notes:

SCHIZZO POSIZIONAMENTO TERMOCOPPIE Termocouples Location Sketch

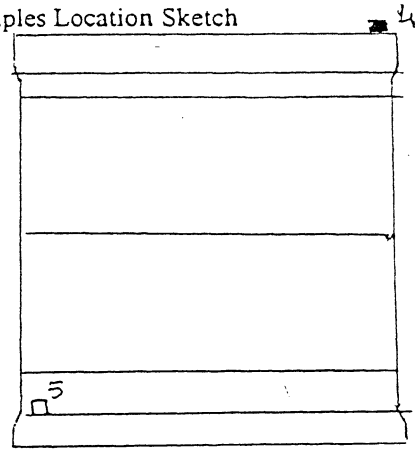

D = INSIDE THERMOCOU.

DIAGRAMMA N° Diagram N°	TEMPERATURA DI PERMANENZA Holding Temperature MAX	MIN	TEMPO DI PERMANENZA Holding Time	MAX GRADIENTE DI SALITA Max Heating Rate	MAX GRADIENTE DI DISCESA Max Cooling Rate
1	350°C	340°C	0,75 hs	60°C/h	/

SI CERTIFICA CHE IL TRATTAMENTO TERMICO RISULTA IN ACCORDO CON LA SPECIFICA SUMMENZIONATA
IL DIAGRAMMA ORIGINALE SI TROVA PRESSO L'ENTE QUALITA' PER CONSULTAZIONE DEGLI ISPETTORI
We certify that heat treatment is according to the named specification
The original time-temperature chart is filed at QC Unit at inspectors disposal

ANSALDO ENERGIA s.p.a.-Stabilimento MILANO			ISPETTORI/Inspectors		
NOME Name	FIRMA Signature	DATA Date	CLIENTE/AGENZIA Customer/Agency	FIRMA Signature	DATA Date
PESSINA	[signature]	11-10-96			

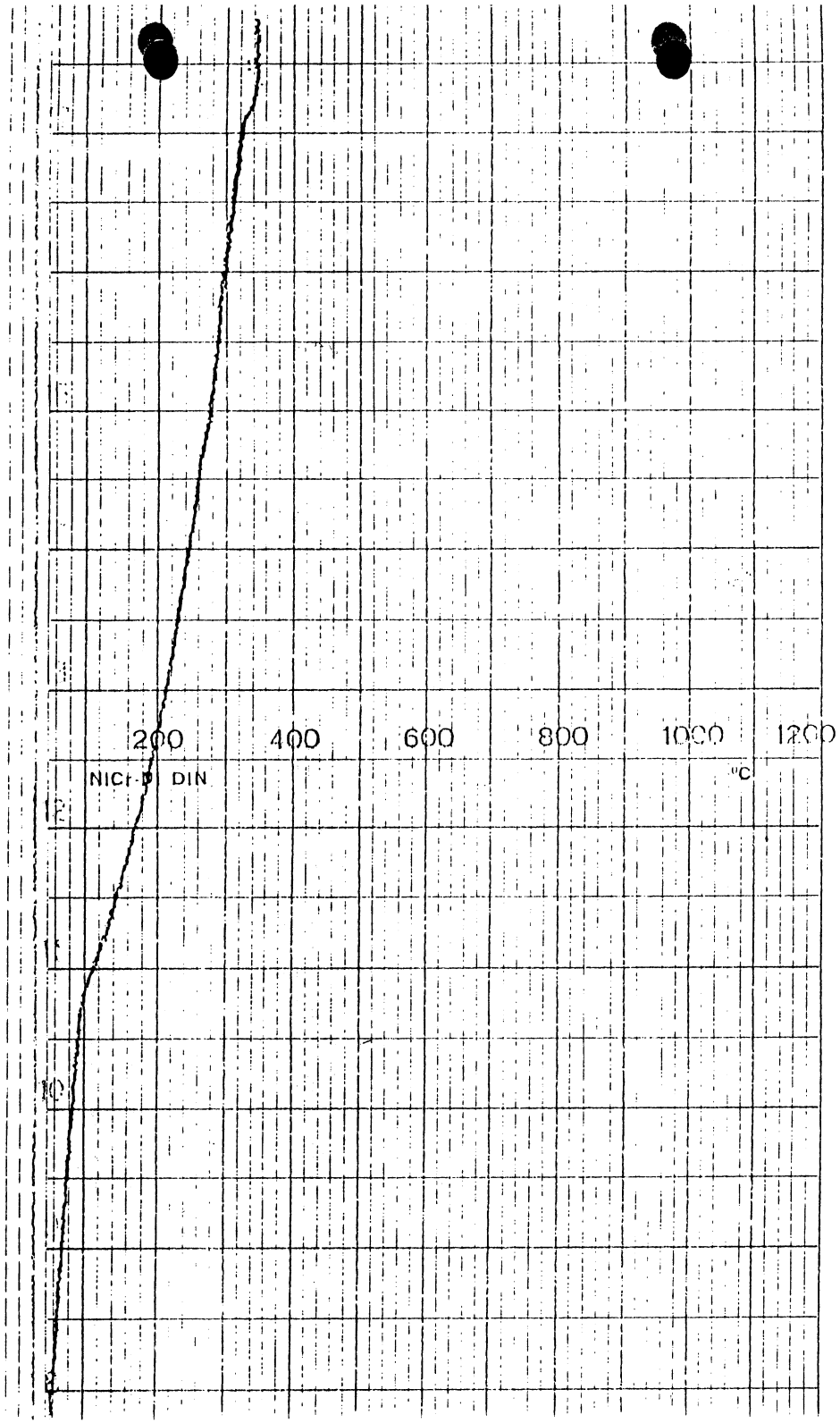
200
400
600
800
1000
1200
°C
NiCr-Ni DIN
10

1

HFO 1541

INF. 1642

DIAGRAMMA TRATTAMENTO TERMICO COMM. 0004EM

Pezzo CILINDRO SUPPORTO N. 620 RMO 7009

Colata MAGNETO (SOLENOID SUPPORT CYLINDER)

Spec. HTP009 Forno WISTRA 1

Certificato HEC 10612

Tipo trattamento DISTENSIONE (P.W.H.T.)

Viola TH No	Rosso TH No	Inizio trattamento
Nero TH No	Verde TH No 4	Data 10-10-96 ora 6.00
Blu TH No 5	Marrone TH No	Fine trattamento
Il Collaudatore [signature]		Data 10-10-96 ora 17.45

200 400 600 800 1000 1200

NiCr-N DIN °C

21 T/C NiCr-Ni

N 4 2H 64 VTX 499

N 5 2H 63 VTX 499

23

REG 2H 12 3-3734885

[signature]

22

ANSALDO Ansaldo Energia s.p.a. Stabilimento MILANO	RAPPORTO TRATTAMENTO TERMICO Heat Treatment report	HEC 1064 FOGLIO Sheet 1 DI Of 1

COMMESSA/JOB	IMPIANTO/PLANT	CLIENTE/CUST.	DOC. RIF./REF. DOC	REV.	ITEM
0004EM	BABAR	ANSALDO PMA	CICLO TERA	0	080

OGGETTO Object: SOLENOID SUPPORT CYLINDER

POST WELD HEAT TREATMENT

DISEGNO Drawing	FIG/POS FIG/Item	REV Rev	COMPLESSO/Assembly
620RH07009	1 e 3	B	

STADIO DI LAVORAZ. Working step: AFTER COILS WELDING

STAMPIGLIATURE/MARCATURE Stampings/Marks: /

TRATTAMENTO TERMICO Heat Treatment

ESEGUITO DA Performed by	LOCALITÀ Place	DATA Date
MANDELLI	ANSALDO E-M	16-11-96

SPECIFICA APPLICABILE/Applicable specification: HTP 010 — REV. Rev. 0

DATA EMISSIONE RAPPORTO Report issue date: /

HFO N° 1547.

TIPO DI TRATT. TERMICO Heat Treatment Type: P.W.H.T.

FORNO Furnace: WISTRA 1

COMBUSTIBILE Fuel: METHANE

TERMOCOPPIE TIPO Termocouples: NI CR NI

IDENTIFICAZIONE Identification: 4(2H71) - 16(2H70).

REGISTRATORE Recorder: 2H12

IDENTIFICAZIONE Identification: 3-3734695

NOTE Notes:

SCHIZZO POSIZIONAMENTO TERMOCOPPIE Termocouples Location Sketch

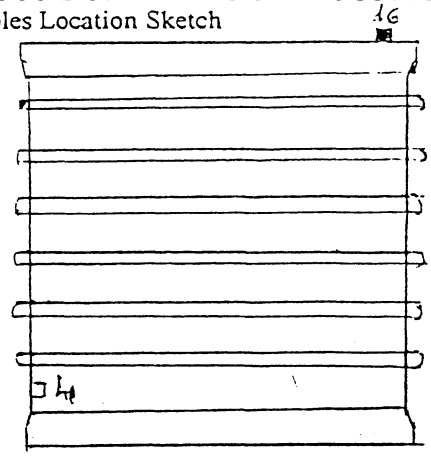

□ = INSIDE THERMOCOUPLE

DIAGRAMMA N° Diagram N°	TEMPERATURA DI PERMANENZA Holding Temperature MAX	MIN	TEMPO DI PERMANENZA Holding Time	MAX GRADIENTE DI SALITA Max Heating Rate	MAX GRADIENTE DI DISCESA Max Cooling Rate
1	360°C	340°C	1h	40°C/h	/

SI CERTIFICA CHE IL TRATTAMENTO TERMICO RISULTA IN ACCORDO CON LA SPECIFICA SUMMENZIONATA
IL DIAGRAMMA ORIGINALE SI TROVA PRESSO L'ENTE QUALITA' PER CONSULTAZIONE DEGLI ISPETTORI
We certify that heat treatment is according to the named specification
The original time-temperature chart is filed at QC Unit at inspectors disposal

ANSALDO ENERGIA s.p.a.-Stabilimento MILANO			ISPETTORI/Inspectors		
NOME Name	FIRMA Signature	DATA Date	CLIENTE/AGENZIA Customer/Agency	FIRMA Signature	DATA Date
PESSINA	[signature]	18-11-96			

INF 2682

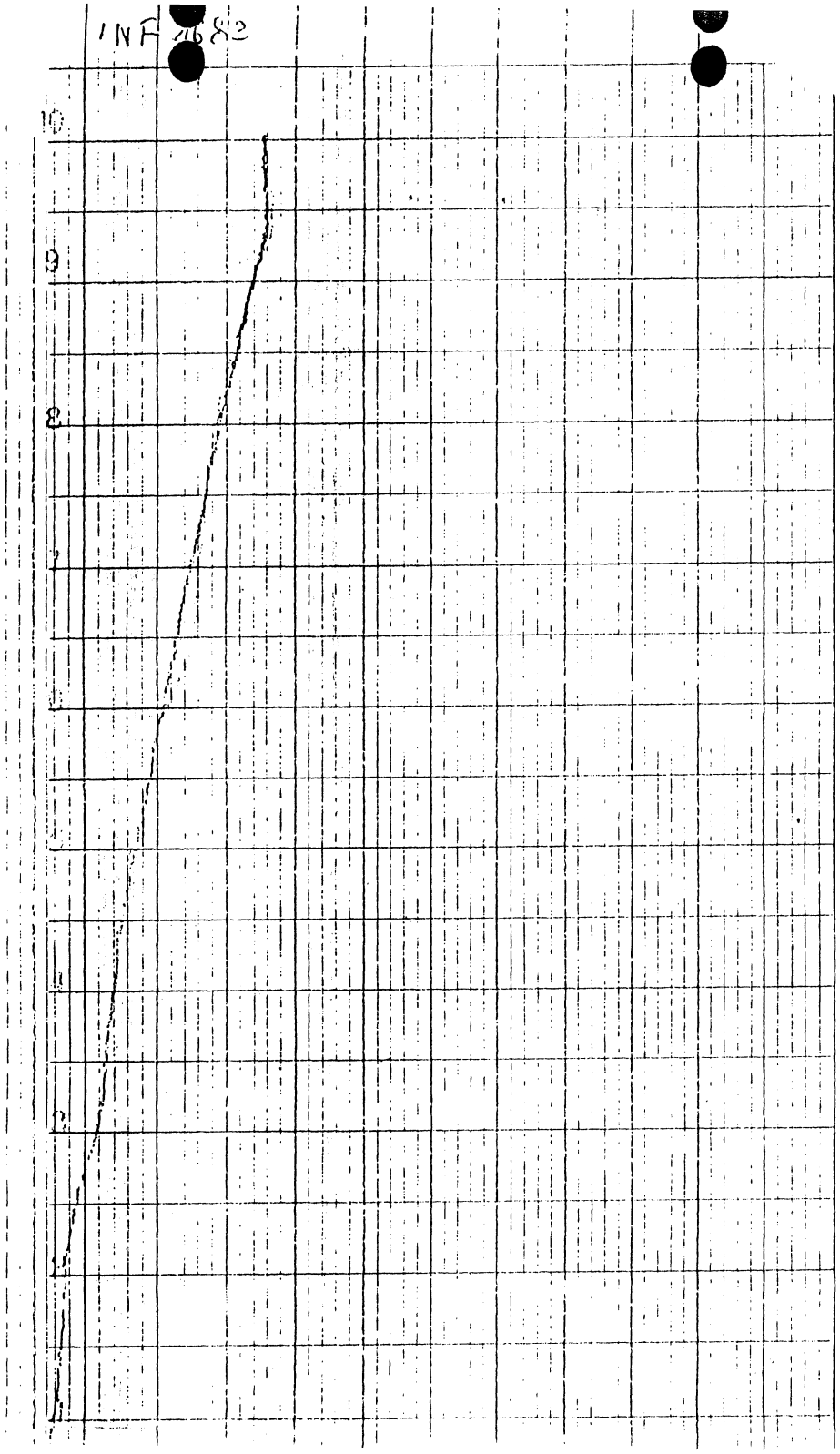

200 400 600 800 1000

MICR-MAIN °C

[illegible] 000 4 EH

[illegible] CILINDRO SUPPORTO [illegible] 020 RMO 1009

[illegible] MAGNETE SOLENOID SUPPORTO CYLINDER

[illegible] WISTRA 1

[illegible] C 10614

Tipo trattamento DISTENSIONE CILINDRO E SERPENTINA

P. W. H. [illegible]

Vista [illegible] Rosso [illegible] Inizio trattamento

Nato [illegible] No. 16 [illegible] No. 4 Data 16-11-96 ore 0.25

[illegible] Fine trattamento

A Collaudatore [signature] Data 16-11-96 ore 10.00

T/C N1 CR - N1

T/C N° 4 2H F1 VTX 499

N° 16 1H F0 VTX 499

REG 2H12 3-3734685

[signature]

C.S.C.

PAGES 47

C.S.C. S.p.A. Schio (VI) ITALY	QUALITY SYSTEM DOCUMENT	Document N° TD. 2139/97.1 Date 21-01-97

Spett.le : ANSALDO ENERGIA — Ns. Rif. / Our Ref. CORR. 2139

Att.ne Sig. DOTT. VALENTE — Vs. Rif. / Your Ref. ORD. BC 176344

Vi trasmettiamo i sottoelencati documenti
Please find herewith the following documents

☒ In allegato *Attached* ☐ Per pacco postale *By mail* ☐ Per Corriere *By Carrier* ☐ Brevi manu a ½ Sig. *Direct through Mr.*

POS.	Documento *Document*	REV.	N° Copie *No. of copies*	Tipo *Type*	Scopo *Scope*
1	PCQ 2139/96.01	0	1	N	DOCUMEN FINALE
"	PCQ 2139/96.02	0	1	N	" "
2	N.C 2139/96.01	0	1	N	" "
3	C.D. 2139/96.01	0	1	N	" "
4	DOC. n° 1122/96	0	1	N	" "
"	DOC. n° 1145/96	0	1	N	" "
"	DOC. n° 1262/96	0	1	N	" "
5	LAB. S.MARCO n° 4635	0	1	N	" "
6	CC. 2139/96.01	0	1	N	" "
7	L.P. 2139/96.1-2	0	1	N	" "
8	WPS 117.1/94	0	1	N	" "
"	PQR 117.1/94	0	1	N	" "
"	WPS 117.2/96	0	1	N	" "
9	I.R. 2139/96.01	0	1	N	" "
10	DISCHETTO DISEGNO		1		" "
11	RAPPORTO R.P.V.	0	1	N	" "
12	DISEGNO n° 1783	1	1	N	" "

N = Copia normale *= Normal print* R = Copia riproducibile *= Transparency* O = Documento originale *= Original document*

Emesso da: A. LANARO *Issued by:* Firma *Sign.* data 21/01/97 *date*

Controllato: A. DAL SANTO *Checked by:* Firma *Sign.* data 22/01/97 *date*

centrostampa schio

PIANO DI CONTROLLO QUALITA'
QUALITY CONTROL PLAN

C.S.C. S.p.A. Schio (VI) ITALY

Cliente *Customer*	Ordine Cliente *Purchase Order*	Oggetto *Object*	Commessa *Shop Order*
ANSALDO	BC 176 344	CILINDRO ALLUMINIO	2139

N. No.	Fase operativa *Operational stage*	Procedura *Specification*	C.S.C. Tipo *Type*	C.S.C. Firma/Data *Signature/Date*	CLIENTE – CUSTOMER Tipo *Type*	CLIENTE – CUSTOMER Firma/Data *Signature/Date*	Tipo *Type*	Firma/Data *Signature/Date*	N.Certificato *No.Certificate*
1	CONTROLLO CERTIFICATI LAM.	ORD. 2139/96.01	P	02/08/96 Colvene					M.2139/96.01
2	TEST MECC. LAMIERE	ASTM B 209 TAV. II	R	31/10/96 Colvene					RAPP. S. MARCO N° 4635
3	SALD. VIROLA I° PASSATA	WPS. 117.1/94	P	1/09/96 Colvene					
4	VISIVO		P	1/09/96 Colvene					
5	LP VIROLA	ASME VIII Div. 1	R	10/09/96 Colvene					LP.2139/96.01
6	CONTROLLO DIM. FORGIATI	SK-2139/96.01 Rev. 0	R	12/09/96 Colvene					CD.2139/96.01
7	CONTR. CERT. FORGIATI	ORD. 2139/96.02	P	03/09/96 Colvene					
4	SALD. FORG. I° PASSATA	WPS. 117.1/94	P	12/09/96 Colvene					
9	CONTR. VISIVO		R	12/09/96 Colvene					
10	LP FORGIATI	ASME VIII Div. 1	R	21/9/96 Colvene					LP.2139/96.02
11	SALDATURA CILINDRO	WPS. 117.1/94	P	11/9/96 Colvene					
12	RX CILINDRO	ASME VIII Div. 1	R	4/10/96 F. Colvene					RX.2139/96.01
13	CONT. DIM. FINALE	SK. 2139/96.01 Rev. 0	R	4/10/96 F. Colvene					CC.2139/96.01

P = Presenza *Hold point* C = Convocazione *Convocation* R = Rapporto *Report*

Data: *Date:* 30/08/96

Preparato: *Prepared:* F. Colvene

Controllato: *Controlled:* [illegible]

Approvato: *Approved:* [illegible]

QUALITY SYSTEM DOCUMENT

Document N. PCQ. 2139/96.01

Sheet 1 of 2

Rev. 0

PCQ-FORM No.21 REV.0 DOC\PCQ

PIANO DI CONTROLLO QUALITA'
QUALITY CONTROL PLAN

C.S.C. S.p.A. Schio (VI) ITALY

Cliente *Customer*	Ordine Cliente *Purchase Order*	Oggetto *Object*	Commessa *Shop Order*
ANSALDO	BC 176344	CILINDRO ALLUMINIO	2139

N. *No.*	Fase operativa *Operational stage*	Procedura *Specification*	C.S.C. Tipo *Type*	C.S.C. Firma/Data *Signature/Date*	CLIENTE – *CUSTOMER* Tipo *Type*	CLIENTE – *CUSTOMER* Firma/Data *Signature/Date*	Tipo *Type*	Firma/Data *Signature/Date*	N.Certificato *No.Certificate*
14	SALD. CIRCUITO	WPS M7.02/96 Rev. 0	P	F. Calvone					
15	PROVA DI FLUSSO		R						
16	PROVA IDRAULICA	ANSI B 31.3	R						
17	PROVA A VUOTO	ASME V SP 07 ART. 10	R						
	ATTENZIONE: LE FASI n° 15, n° 16 e n° 17 SONO STATE ESEGUITE DIRETTAMENTE DAL CLIENTE								

P = Presenza *Hold point* C = Convocazione *Convocation* R = Rapporto *Report*

Data: *Date:* 30/08/96

Preparato: *Prepared:* F. Calvone

Controllato: *Controlled:* [illegible]

Approvato: *Approved:* [illegible]

QUALITY SYSTEM DOCUMENT

Document N. PCQ. 2139/96.01

Sheet 2 of 2

Rev. 0

PCQ-FORM No.21 REV.0 DOC\PCQ

PIANO DI CONTROLLO QUALITA'
QUALITY CONTROL PLAN

C.S.C. S.p.A. Schio (VI) ITALY

QUALITY SYSTEM DOCUMENT

Document N. PCQ. 2139/96.02

Sheet 1 of 1 Rev. 0

Cliente / Customer	Ordine Cliente / Purchase Order	Oggetto / Object	Commessa / Shop Order
ANSALDO	BC 176344	TUBERIA CILINDRO	2139

N. / No.	Fase operativa / Operational stage	Procedura / Specification	C.S.C. Tipo / Type	C.S.C. Firma/Data / Signature/Date	CLIENTE – CUSTOMER Tipo / Type	CLIENTE – CUSTOMER Firma/Data / Signature/Date	Tipo / Type	Firma/Data / Signature/Date	N.Certificato / No.Certificate
1	TAGLIO TUBO QUADRO	DIS 620RM07009	P	21/10/96 [signature]					
2	SALDATURA FLANGETTA	//	P	22/10/96 [signature]					
3	SALDATURA GIUNTO BIMETALLICO		P	22/10/96 [signature]					
4	PROVA A VUOTO	SP. 07	R	28/10/96 [signature]					RAPPORTO RPV

P = Presenza C = Convocazione R = Rapporto

Data: Date: 07/10/96

Preparato: Prepared: F. Calvone

Controllato: Controlled: A. Lanero

Approvato: Approved: S. Adolfo [signature]

C.S.C. S.p.A.
Schio (VI) ITALY

QUALITY SYSTEM DOCUMENT

Document N. NC. 2139/96.01

Sheet 1 of 1

RAPPORTO DI NON CONFORMITA'
NON CONFORMANCE REPORT

☒ DI COMMESSA
☐ DI SISTEMA

Commessa *Shop Order*		Ordine Cliente *Purchase Order*	Oggetto *Object*
2139			CILINDRO ALL
Disegno *Drawing*	**Materiale** *Material*	**Fornitore/Operatore** *Supplier/Operator*	**Ordine al fornitore** *Order to supplier*
	ALLUMINIO		

N.C. rilevata durante : *N.C. detected during :* PROVA A VUOTO

Descrizione della N.C.: *Description of N.C. :*

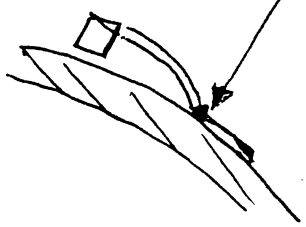

perdita sul tubo di raffreddamento, in prossimità della saldatura tra virola e tubo.

Compilato da : *Prepared by :* CALVONE

Controllato da RC: *Controlled by :* Calvone

Data: *Date:* 11/11/96 Firma: *Signat.:* Calvone

Data: *Date:* Firma: *Signat.:*

N.C. Notificata a mezzo/firma : *N.C. Notificated by sign.:* fax

Classificazione della N.C.: *N.C. classification :* ☐ Minor ☒ Major

Proposta di risoluzione : *Proposal of resolution :*

- 1° tagliare tubo dal collettore
- 2° tagliare tubo dalla virola
- 3° sollevare tubo dalla virola
- 4° scoldare tubo
- 5° riparare foro
- 6° provare tubo a vuoto
- 7° saldare tubo sulla virola
- 8° eseguire prova a vuoto finale

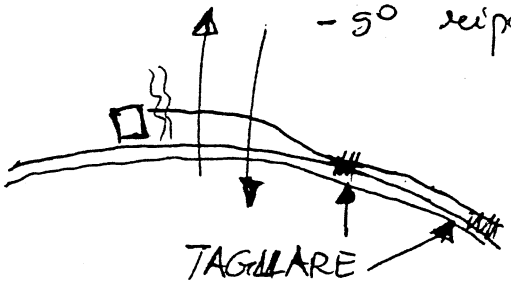

Preparato da : *Prepared by :* CALVONE

Data: *Date:* 11/11/96 Firma: *Signat.:* CF

Controllato RQA *Checked by* CF

Approvato da (direzione): *Approved by:* G. Del Santo

Data: *Date:* 22/01/97 Firma: *Signat.:* [illegible]

Verifica risoluzione della N.C. *Checking of N.C. resolution* VEDERE FAX ALLEGATO N° PTA/6.757/

Eseguito da : *By :* Data: *Date:* Firma: *Signat.:*

Ansaldo Energia s.p.a. GENOVA (ITALIA)	**ANSALDO** **TELEFAX** N° ++ 39 10 6556485	Data: 11/11/96 date: N. fax:PMA/6.757/PV Fogli n. :1 Pages no. :
DESTINATARIO *T O*	Societa' : CSC Company Sig. : F. CALVONE Mr. Fax n. : 0445/575750 Fax no.	
MITTENTE *F R O M*	Sig. : P. VALENTE Mr. Ufficio : PMA/CRSP Office Tel. n. : 010/6556722 Phone No.	
OGGETTO *S U B J E C T*	BaBar CILINDRO BABAR vs. fax del 11/11/96 rapporto di non conformità n° NC.2139/96.01	

Relativamente a quanto in oggetto, accettiamo la proposta di risoluzione, facendo comunque presente che prima di effettuare la prova di tenuta da vuoto:

1) il circuito va saldato al collettore

2) conviene effettuare una prova idraulica per evidenziare subito eventuali difetti.

Per evitare ulteriori rotture del tubo riteniamo che sia meglio scaldare il tubo prima di sollevarlo.

Mostriamo comunque preoccupazione nella riparazione della perdita, in quanto, se fosse presente una cricca, questa anche se momentaneamente riparata potrebbe in seguito propagarsi e creare una nuova perdita. Riteniamo che sia più vantaggioso eliminare la parte di tubo con la perdita è sostituirla con un pezzo nuovo effettuando due saldature di testa. Le saldature del tubo alla virola in corrispondenza delle saldature testa a testa potrebbero essere evitate, nel caso non fosse possibile effettuarle.

Distinti saluti

P. Valente

Visto

C.S.C. S.P.A. Schio (VI) Italy	QUALITY SYSTEM DOCUMENT	Document N° C.D. 2129/96.01	
		Sheet 1 of 3	Rev. 0

CONTROLLO DIMENSIONALE
FORGIATI E CILINDRO

Rev.	Date	Description	Prepared by	Approved by
0	12/09/96	dim. check anelli	F. CALVONE Calvone	A. Dal Santo

Anello (1) (Vedi ORD. 2139/96.02 Rev. 0)

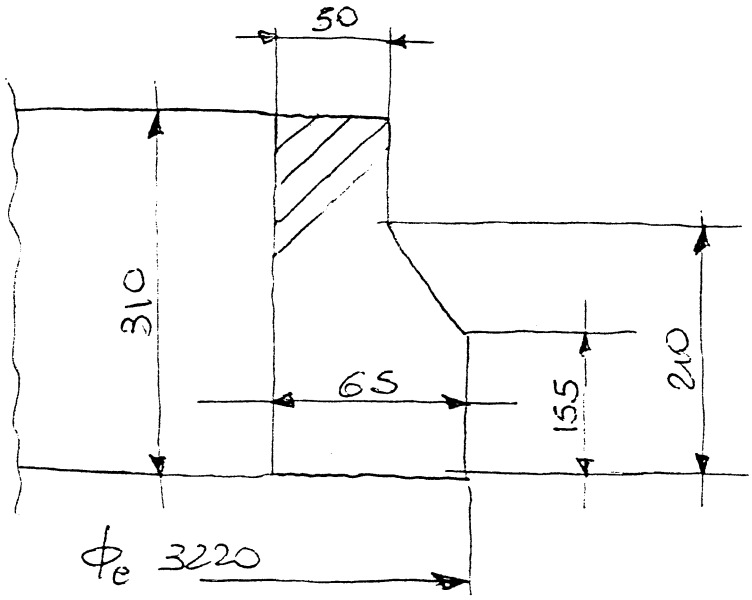

NOTA: SMUSSO NON INDICATO CONFORME A ORDINE

Anello (2)

NOTA: SMUSSO NON INDICATO CONFORME A ORDINE

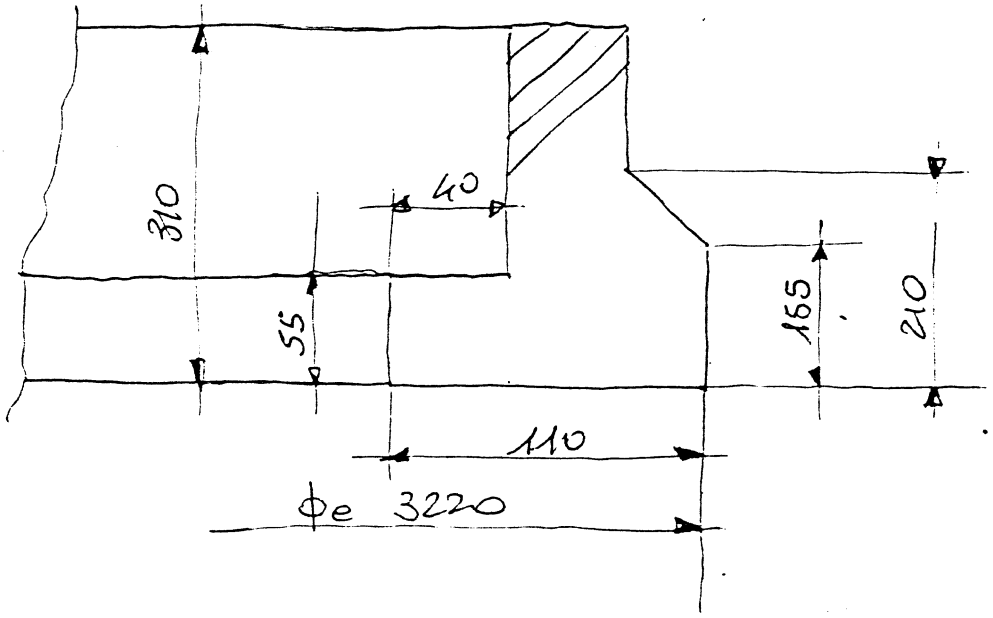

Anello (3)

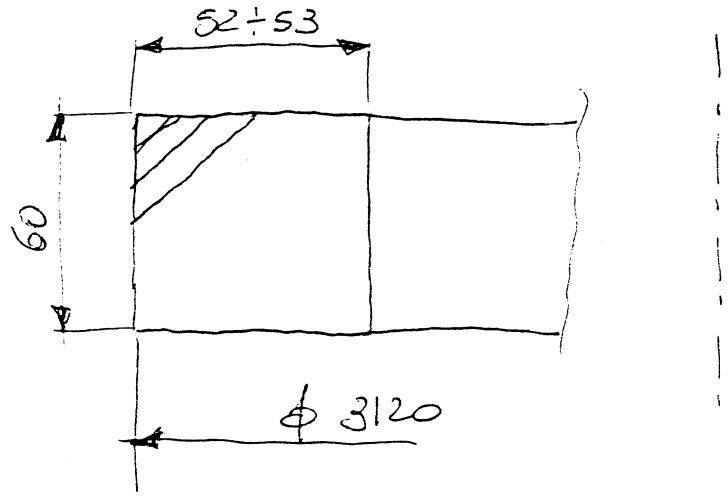

CILINDRO :

L'altezza misurata in varie posizioni fornisce un valore pari a h = 300.5 mm.
La posizione orizzontale del cilindro impedisce la misura del diametro.

C.S.C. S.p.A.
SCHIO (VI)

12/09/96
F. Calvione

TORRESIN CARPENTERIE METALLICHE s.r.l.	OGGETTO: Object: CSC 055.96	Foglio: Sheet: di of

VIROLA ASME PENETRAMETRO A FILI

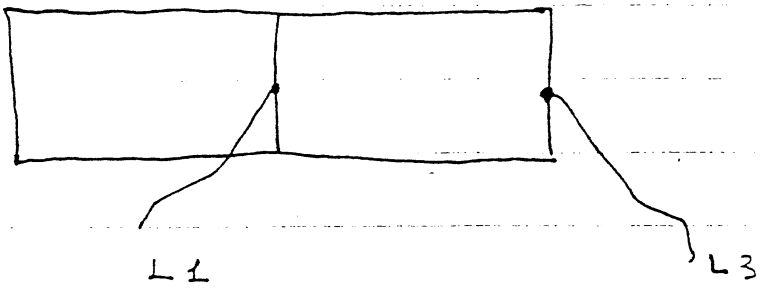

RX 100% ASME

POS	DATA	N°	OK	R1 R2 R3	≠	MAT
CSC/055.96/1/L1	30/08	5	5	—	45	Alloy 5083
CSC/055.96/1/L3	06/09	5	5	—	45	"
CSC/055.96/2/L2	30/08	5	5	—	45	5083
CSC/055.96/2/L4	06/09	5	5	—	45	"
CSC/055.96/C1					45	5083
CSC/055.96/C2					45	5083
CSC/055.96/C3					45	5083

EFF.

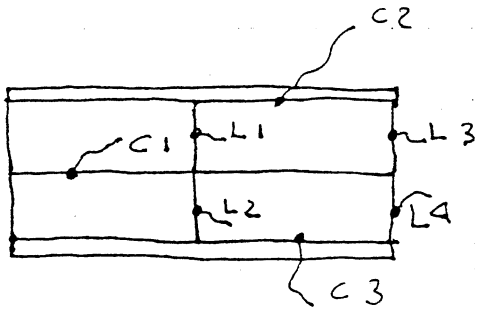

TORRESIN CARPENTERIE METALLICHE s.r.l.
Servizio Controllo Qualità
Fagan Vanni

Diffusione: Diffusion:							Data: Date:	Emesso da: Emission:	Modello: Mod.	Revisione: Rev.
CO	DT	Q	PR	AQ	AM	SG			0 0 1	

M.C. CONTROL S N C
CAMISANO (VICENZA)

VERBALE RADIOGRAFICO
RADIOGRAPHIC CERTIFICATE

N. 1122/96

FOGLIO (SHEET) 01 DI (OF) 01

CLIENTE (COSTUMER): TORRESIN CARPENTERIE METALLICHE SRL LIMENA (PD)

ORDINE (ORDER): CSC 055.96 DEL (OF): 01.09.96

DESCRIZIONE (DESCRIPTION): N° 02 LAMIERE sp. 45 mm.

FASE DI LAVORO (WORK STAGE): DOPO SALDATURA MATERIALE BASE (BASE MATERIAL): ALLOY 5083

MARCHE DI RIFERIMENTO (REFERENCE MARKING): CSC 055.96L1/L2

DOCUMENTI APPLICABILI (REFERENCE DOCUMENTS): ASME VIII DIV. 1 ACCETTABILITA' DIFETTI (ACCEPTABLE CLASS DEFECTS): App. 4

SORGENTE (SOURCE): X TENSIONE KV (VOLTAGE): 270 CORRENTE mA (CURRENT): 6 mC

SCHERMI (SCREENS): AL PIOMBO SPESSORE: LATO SORGENTE (THICKNESS: SOURCE SIDE): 0.10 LATO PELLICOLA (FILM SIDE): 0.15

TIPO PELLICOLA (FILM TYPE): KODAK AA DENSITA' (DENSITY): 1,8 ÷ 4

DISTANZA SORGENTE PELL. (SOURCE TO FILM DISTANCE): 700 mm. DIMENSIONE SORGENTE (SOURCE SIZE): 3 X 3

TIPO PENETRAMETRO (PENETRAMETER TYPE): 6 AL DIN POSIZIONE (POSITION) ☒ LATO SORG. (SOURCE SIDE) ☐ LATO PELL. (FILM SIDE)

TEMPO DI ESPOSIZIONE (EXPOSITION TIME): 90" APPARECCHIO (RADIOGRAPHIC APPARATUS): GILARDONI 300/6

TRATTO POSITION	ESITO JUDGEM.	DIFETTI DEFECTS	TRATTO POSITION	ESITO JUDGEM.	DIFETTI DEFECTS
CSC 055-96L1			CSCCSC 055-96L2		
1 - 2	S	P SO	1 - 2	S	P IG
2 - 3	S	P SO	2 - 3	S	P
3 - 4	S	P	3 - 4	S	P
4 - 5	S	P IG	4 - 5	S	P SO
5 - 6	S	P	5 - 6	S	P IG

SCHIZZO (SKETCK)

CONFORME ALL'ORIGINALE TORRESIN Servizio Controllo Qualità

DIFETTI DEFECTS

IG - Inclusioni gas / Gas inclusion
IT - Incl. gas allung. (tarli) / Pinholes
P - Porosità / Porosity
SO - Soffiature / Blowhole
Iw - Inclusioni di w / w inclusions
MP - Mancata penetrazione / Lack of penetration
MF - Mancata fusione / Lack of fusion
IM - Incisioni marginali / Under cuttings
IS - Inclusioni scoria / Slag inclusions
C - Cricche / Cracks
IN - Incollature / Lack of fusion
H - Marcatura superficiale / Superficial marking
DF - Difetto pellicola / Film defects
RI - Ripresa irregolare / Irregular root
CI - Cordone irregolare / Irregular bead
IO - Insellamento / Root groove
D - Dislivellamento / Edges misalignment
SG - Sgocciolamento / Root Tears
EM - Eccesso di molatura / Excessive grinding
EP - Eccessiva penetrazione / Excessive penetration
DP - Disassamento passate / Misalignment of beads
PS - Puntatura strappata / Tack weld grooving
A - Accensione d'arco / Arc weld starting
SP - Spruzzi / Spatters
O - Ossidazioni / Oxidation
CR - Crateri / Craters
CA - Cavità / Piping porosity
RT - Ritiri / Shrinkages

ESITO JUDGEMENT

R - Riparare / To repair
RR - Ripetere / To repeat
S - Soddisfacente / Satisfactory

	EMESSO ISSUED	OPERATORE OPERATOR	ISPETTORE INSPECTOR	
DATA DATE	TORRESIN CARPENTERIE METALLICHE s.r.l. Servizio Controllo Qualità	01.09.96		
FIRMA SIGNATURE				

M.C. CONTROL S N C
CAMISANO (VICENZA)

VERBALE RADIOGRAFICO
RADIOGRAPHIC CERTIFICATE

N. 1145/96

FOGLIO / SHEET 01 DI / OF 01

CLIENTE / COSTUMER: TORRESIN CARPENTERIA METALLICA s.r.l. LIMENA (PD)

ORDINE / ORDER: COMM. CSC 055-96 DEL / OF: 09.09.96

DESCRIZIONE / DESCRIPTION: N° 02 LAMIERE SP. 45 mm.

FASE DI LAVORO / WORK STAGE: DOPO SALDATURA MATERIALE BASE / BASE MATERIAL: ALLOY 5083

MARCHE DI RIFERIMENTO / REFERENCE MARKING: CSC 055-96 L3/L4

DOCUMENTI APPLICABILI / REFERENCE DOCUMENTS: ASME VIII DIV. 1 ACCETTABILITA' DIFETTI / ACCEPTABLE CLASS DEFECTS: UW 51

SORGENTE / SOURCE: X TENSIONE KV / VOLTAGE: 270 CORRENTE mA / CURRENT: 6 mC

SCHERMI / SCREENS: AL PIOMBO SPESSORE: LATO SORGENTE / THICKNESS: SOURCE SIDE: 0.10 LATO PELLICOLA / FILM SIDE: 0.15

TIPO PELLICOLA / FILM TYPE: KODAK AA DENSITA' / DENSITY: 1,8 : 4

DISTANZA SORGENTE PELL. / SOURCE TO FILM DISTANCE: 700 mm. DIMENSIONE SORGENTE / SOURCE SIZE: 3 X 3

TIPO PENETRAMETRO / PENETRAMETER TYPE: 10 FE DIN POSIZIONE / POSITION: [X] LATO SORG. / SOURCE SIDE [ ] LATO PELL. / FILM SIDE

TEMPO DI ESPOSIZIONE / EXPOSITION TIME: 90" APPARECCHIO / RADIOGRAPHIC APPARATUS: GILARDONI 300/6

TRATTO / POSITION	ESITO / JUDGEM.	DIFETTI / DEFECTS	TRATTO / POSITION	ESITO / JUDGEM.	DIFETTI / DEFECTS
CSC 055-96L3			CSC 055-96L4		
1 - 2	S	P	1 - 2	S	
2 - 3	S	P	2 - 3	S	P
3 - 4	S	P SO	3 - 4	S	DF
4 - 5	S		4 - 5	S	P
5 - 6	S	P	5 - 6	S	

SCHIZZO / SKETCK

CONFORME ALL'ORIGINALE
TORRESIN
CARPENTERIE METALLICHE s.r.l.
Servizio Controllo Qualità

DIFETTI DEFECTS

IG - Inclusioni gas / Gas inclusion
IT - Incl. gas allung. (tarli) / Pinholes
P - Porosità / Porosity
SO - Soffiature / Blowhole
Iw - Inclusioni di w / w inclusions
MP - Mancata penetrazione / Lack of penetration
MF - Mancata fusione / Lack of fusion
IM - Incisioni marginali / Under cuttings
IS - Inclusioni scoria / Slag inclusions
C - Cricche / Cracks
IN - Incollature / Lack of fusion
H - Marcatura superficiale / Superficial marking
DF - Difetto pellicola / Film defects
RI - Ripresa irregolare / Irregular root
CI - Cordone irregolare / Irregular bead
IO - Insellamento / Root groove
D - Dislivellamento / Edges misalignment
SG - Sgocciolamento / Root Tears
EM - Eccesso di molatura / Excessive grinding
EP - Eccessiva penetrazione / Excessive penetration
DP - Disassamento passate / Misalignment of beads
PS - Puntatura strappata / Tack weld grooving
A - Accensione d'arco / Arc weld starting
SP - Spruzzi / Spatters
O - Ossidazioni / Oxidation
CR - Crateri / Craters
CA - Cavità / Piping porosity
RT - Ritiri / Shrinkages

ESITO JUDGEMENT

R - Riparare / To repair
RR - Ripetere / To repeat
S - Soddisfacente / Satisfactory

	EMESSO / ISSUED	OPERATORE / OPERATOR	ISPETTORE / INSPECTOR	
DATA / DATE	TORRESIN CARPENTERIE METALLICHE s.r.l.	09.09.96		
FIRMA / SIGNATURE	Servizio Controllo Qualità Fagan Vanni	M.C. CONTROL s.n.c Camon Maurizio II LIV. CASNT / CIC / NE		

M.C. CONTROL S N C
CAMISANO (VICENZA)

VERBALE RADIOGRAFICO
RADIOGRAPHIC CERTIFICATE

N. 1262/96

FOGLIO / SHEET 01 DI / OF 02

CLIENTE / COSTUMER: TORRESIN CARPENTERIE METALLICHE SRL — LIMENA

ORDINE / ORDER: CSC/055.96 DEL / OF

DESCRIZIONE / DESCRIPTION: N° 03 CIRCOLARI ≠ 45 - 55

FASE DI LAVORO / WORK STAGE: DOPO SALDATURA

MATERIALE BASE / BASE MATERIAL: ALLOY 5083

MARCHE DI RIFERIMENTO / REFERENCE MARKING: CSC/055.96C1÷C3

DOCUMENTI APPLICABILI / REFERENCE DOCUMENTS: ASME VIII DIV. 1

ACCETTABILITA' DIFETTI / ACCEPTABLE CLASS DEFECTS: UW 51

SORGENTE / SOURCE: X — TENSIONE KV / VOLTAGE: 250 — CORRENTE mA / CURRENT: 6 — mC

SCHERMI / SCREENS: AL PIOMBO — SPESSORE: LATO SORGENTE / THICKNESS: SOURCE SIDE: 0.10 — LATO PELLICOLA / FILM SIDE: 0.15

TIPO PELLICOLA / FILM TYPE: KODAK AA — DENSITA' / DENSITY: 1,8 : 4

DISTANZA SORGENTE PELL. / SOURCE TO FILM DISTANCE: 700 mm. — DIMENSIONE SORGENTE / SOURCE SIZE: 2 X 2

TIPO PENETRAMETRO / PENETRAMETER TYPE: 10 FE DIN — POSIZIONE / POSITION: ☒ LATO SORG. / SOURCE SIDE ☐ LATO PELL. / FILM SIDE

TEMPO DI ESPOSIZIONE / EXPOSITION TIME: 60" — APPARECCHIO / RADIOGRAPHIC APPARATUS: GILARDONI 250/6

SCHIZZO / SKETCK

CONFORME ALL'ORIGINALE
TORRESIN CARPENTERIE METALLICHE s.r.l.
Servizio Controllo Qualità

	EMESSO / ISSUED	OPERATORE / OPERATOR	ISPETTORE / INSPECTOR	
DATA / DATE	TORRESIN CARPENTERIE METALLICHE s.r.l.	03.10.96		
FIRMA / SIGNATURE	Servizio Controllo Qualità Fagan Vanni	M.C. CONTROL s.n.c. Maurizio		

M.C. CONTROL S N C
CAMISANO (VICENZA)

VERBALE RADIOGRAFICO
RADIOGRAPHIC CERTIFICATE

N. 1262/96

FOGLIO 02 DI 02
SHEET OF

TRATTO POSITION	ESITO JUDGEM.	DIFETTI DEFECTS	TRATTO POSITION	ESITO JUDGEM.	DIFETTI DEFECTS	TRATTO POSITION	ESITO JUDGEM.	DIFETTI DEFECTS
CSC/055.96C1			CSC/055.96C2			CSC/055.96C3		
1 - 2	S	P	1 - 2	S	P	1 - 2	S	DF P
2 - 3	S	P	2 - 3	S	P	2 - 3	S	P
3 - 4	S	P DF	3 - 4	S	P	3 - 4	S	P
4 - 5	S	DF P	4 - 5	S	P	4 - 5	S	DF P
5 - 6	S	P	5 - 6	S	P	5 - 6	S	P
6 - 7	S	P	6 - 7	S	P	6 - 7	S	P
7 - 8	S	P	7 - 8	S	P	7 - 8	S	P IG
8 - 9	S	P	8 - 9	S	P	8 - 9	S	
9 - 10	S	P	9 - 10	S	P SO	9 - 10	S	P
10 - 11	S	P SO	10 - 11	S	P	10 - 11	S	P SO
11 - 12	S	P	11 - 12	S	P	11 - 12	S	P
12 - 13	S	P	12 - 13	S	P	12 - 13	S	P
13 - 14	S	P	13 - 14	S	P	13 - 14	S	P SO
14 - 15	S	P	14 - 15	S	P	14 - 15	S	P
15 - 16	S	P	15 - 16	S	P	15 - 16	S	P DF
16 - 17	S	P	16 - 17	S	P SO	16 - 17	S	P
17 - 18	S	P	17 - 18	S	P	17 - 18	S	P
18 - 19	S	P	18 - 19	S	P	18 - 19	S	P
19 - 20	S	P	19 - 20	S	P DF	19 - 20	S	P
20 - 21	S	P	20 - 21	S	P	20 - 21	S	P
21 - 22	S	P	21 - 22	S	P	21 - 22	S	P IG
22 - 23	S	P	22 - 23	S	P	22 - 23	S	P
23 - 24	S	P	23 - 24	S	P DF	23 - 24	S	P
24 - 25	S	P	24 - 25	S	P	24 - 25	S	
25 - 26	S	P	25 - 26	S	P DF	25 - 26	S	P
26 - 27	S	P	26 - 27	S	P	26 - 27	S	P
27 - 28	S	P	27 - 28	S	P	27 - 28	S	P DF
28 - 29	S	P	28 - 29	S	P	28 - 29	S	P DF
29 - 30	S	P	29 - 30	S	P	29 - 30	S	P DF
30 - 1	S	P DF	30 - 1	S	P SO	30 - 1	S	P IG

CONFORME ALL'ORIGINALE
TORRESIN
CARPENTERIE METALLICHE s.r.l.
Servizio Controllo Qualità

DIFETTI DEFECTS

IG - Inclusioni gas
Gas inclusion
IT - Incl. gas allung. (tarli)
Pinholes
P - Porosità
Porosity
SO - Soffiature
Blowhole
Iw - Inclusioni di w
w inclusions

MP - Mancata penetrazione
Lack of penetration
MF - Mancata fusione
Lack of fusion
IM - Incisioni marginali
Under cuttings
IS - Inclusioni scoria
Slag inclusions
C - Cricche
Cracks
IN - Incollature
Lack of fusion

H - Marcatura superficiale
Superficial marking
DF - Difetto pellicola
Film defects
RI - Ripresa irregolare
Irregular root
CI - Cordone irregolare
Irregular bead
IO - Insellamento
Root groove
D - Dislivellamento
Edges misalignment

SG - Sgocciolamento
Root Tears
EM - Eccesso di molatura
Excessive grinding
EP - Eccessiva penetrazione
Excessive penetration
DP - Disassamento passate
Misalignment of beads
PS - Puntatura strappata
Tack weld grooving
A - Accensione d'arco
Arc weld starting

SP - Spruzzi
Spatters
O - Ossidazioni
Oxidation
CR - Crateri
Craters
CA - Cavità
Piping porosity
RT - Ritiri
Shrinkages

ESITO JUDGEMENT

R - Riparare
To repair
RR - Ripetere
To repeat
S - Soddisfacente
Satisfactory

	EMESSO ISSUED	OPERATORE OPERATOR	ISPETTORE INSPECTOR	
DATA DATE	TORRESIN CARPENTERIE METALLICHE s.r.l.	02/10.96		
FIRMA SIGNATURE	Servizio Controllo Qu. Fagan Vanni	M.C. CONTROL s.n.c. Canton Maurizio [illegible] ASNT DIC PND		

Richiedente:

Spett.le
C.S.C. S.p.a.
Via Lago Maggiore, 7
36015 SCHIO (VI)

Schio lì 31 ottobre 1996

Prova richiesta	determinazione delle caratteristiche meccaniche
Materiale	tallone saldato in lega di alluminio sp.45 mm
Identificazione del Cliente	ord. 2139/96.19
Identificazione interna	comm. 3436
Campionamento	a cura Cliente
Normativa applicabile	ASME sez. IX;
Data di esecuzione prova	30 ottobre 1996
Riferimenti del Cliente	bolla di accompagnamento nr. 853 del 28-10-1996 ordine 2139/96.19 PPS 2139-01, 2139-02, 2139-03, 2139-04, 2139-05.

I RISULTATI DELLE PROVE SI RIFERISCONO ESCLUSIVAMENTE AL MATERIALE SOTTOPOSTO A PROVE.
QUESTO DOCUMENTO NON PUO' ESSERE RIPRODOTTO, NEMMENO IN FORMA PARZIALE, SENZA APPROVAZIONE SCRuTTA DEL LABORATORIO PROVE MATERIALI S.MARCO SRL.

RISULTATI DI PROVA

prova di trazione trasversale

identificazione	dimensione mm	sezione mm²	carico totale KN	carico unitario N/mm²	posizione di rottura
T 1	19,1*44,4	848,0	228,70	270	saldatura
T 2	19,2*44,8	860,2	219,79	256	saldatura

prova di piega (α =180°, a = 6t)

tipo di piega	esito
1 piega laterale	positivo

I RISULTATI DELLE PROVE SI RIFERISCONO ESCLUSIVAMENTE AL MATERIALE SOTTOPOSTO A PROVE.
QUESTO DOCUMENTO NON PUO' ESSERE RIPRODOTTO, NEMMENO IN FORMA PARZIALE, SENZA APPROVAZIONE SCRuTTA DEL LABORATORIO PROVE MATERIALI S.MARCO SRL.

RISULTATI DI PROVA

esame macro

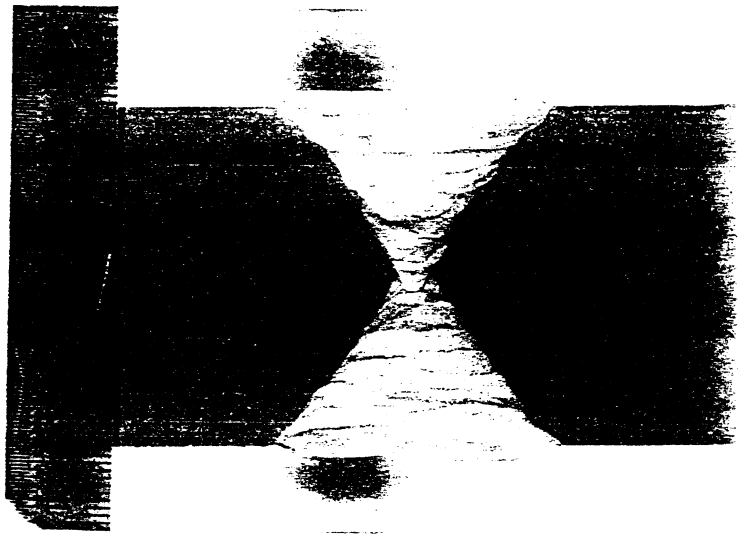

macro nr.1; 1X; idrato sodico;

I RISULTATI DELLE PROVE SI RIFERISCONO ESCLUSIVAMENTE AL MATERIALE SOTTOPOSTO A PROVE.
QUESTO DOCUMENTO NON PUO' ESSERE RIPRODOTTO, NEMMENO IN FORMA PARZIALE, SENZA APPROVAZIONE SCRUTTA DEL LABORATORIO PROVE MATERIALI S.MARCO SRL.

RISULTATI DI PROVA

esame macro

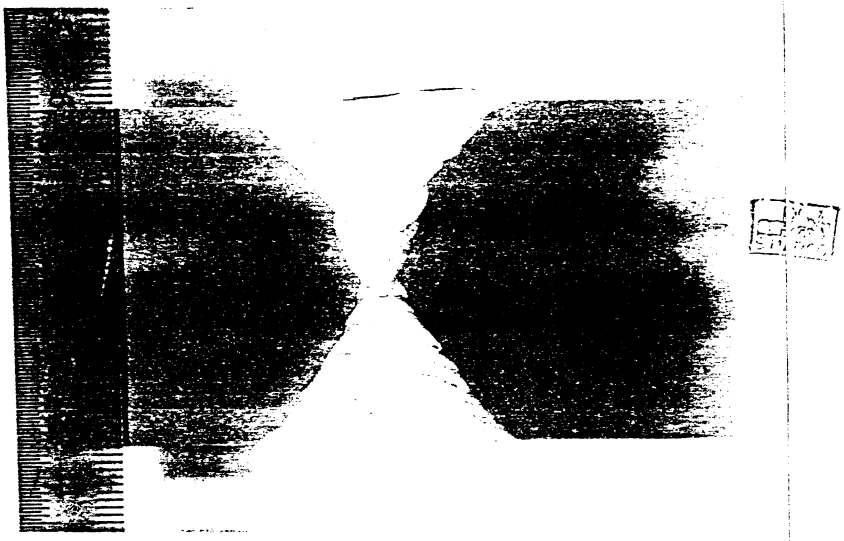

macro nr.2; 1X; idrato sodico;

LABORATORIO PROVE MATERIALI
S.MARCO S.R.L.

Il Responsabile
G.Toldo

I RISULTATI DELLE PROVE SI RIFERISCONO ESCLUSIVAMENTE AL MATERIALE SOTTOPOSTO A PROVE.
QUESTO DOCUMENTO NON PUO' ESSERE RIPRODOTTO, NEMMENO IN FORMA PARZIALE, SENZA APPROVAZIONE SCRUTTA DEL LABORATORIO PROVE MATERIALI S.MARCO SRL.

C.S.C. S.p.A.
Schio (VI) ITALY

QUALITY SYSTEM DOCUMENT

Document N. CC 2139/96.01

Sheet 1 of 1 | Rev. 0

DICHIARAZIONE DI CONFORMITA'
CERTIFICATE OF CONFORMITY

Cliente / *Customer*: ANSALDO

Ordine Cliente / Data / *Purchase Order / Date*: BC176344

N° Bolla di spedizione / data / *No Consignement note / date*: XAB 123483/96 del 04/10/96

No Pezzi / *No Pieces*	Descrizione / *Description*	Matricola/Disegno / *Serial/Drawing*	Commessa / *Job order*
1	CILINDRO ALLUMINIO BABAR		2139
	SK. 2139/96.01 (CSC)		
	620RM07273 Rev 0		

SULLA BASE DEI NOSTRI CONTROLLI EFFETTUATI PRIMA DELLA SPEDIZIONE DICHIARIAMO CHE I PRODOTTI SOPRA MENZIONATI SONO CONFORMI ALLE PRESCRIZIONI DELL'ORDINE E DEI RELATIVI DISEGNI.

UNDER THE BASIS OF OUR CONTROL MADE BEFORE DESPATCH WE CERTIFY THAT THE HEREIN PRODUCTS CONFORM WITH ALL REQUIREMENTS SPECIFIED IN THE ORDER AND WITH ALL RELEVANT DRAWINGS.

Responsabile controllo / *Chief Inspector*

Data / *Date*: 9/10/96

ANSALDO Componenti Area Milano	Controllo dimensionale / Dimensional check	DCR 13118 Foglio / Sheet 1 di / of 2

COMMESSA / Job	CLIENTE / Customer	IMPIANTO / Plant	DOC. RIF. / Ref. doc.	Item	REV.
0004 EM	ANSALDO - GE				

Oggetto / Object: CILINDRO SUPPORTO SOLENOIDE

Disegno / Drawing: SK 2139 96.1 CSC 620 RM 07 273 fig

Stadio di lavorazione / Working step:

Esame secondo / Check according to:

Controllo / Control

Eseguito da / Performed by		Località / Place of test	Data / Date
1	BIFFI	ANSALDO MI	9/10/96
	MELZI		9/10/96

Data emissione certificato / Date issuing certificate:

Vista dal lato LS

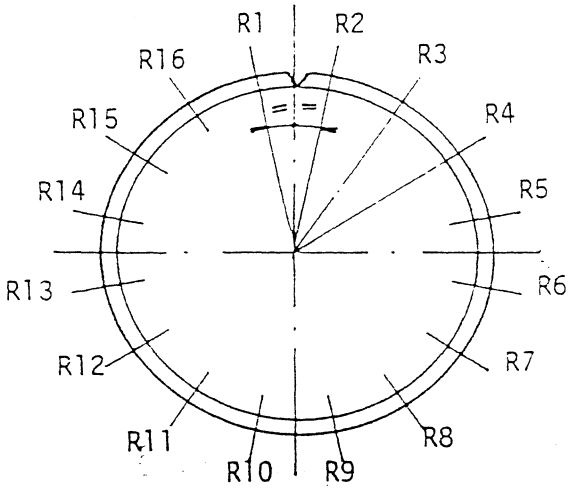

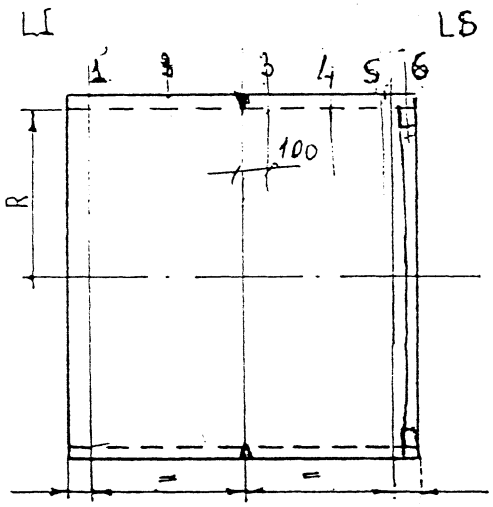

DIAMETRO INTERNO	TOLLER. DIAM.	SVILUPPO VIROLA	OVALITA' AMMESSA	

	Lt	Dm	R1 / R9	R2 / R10	R3 / R11	R4 / R12	R5 / R13	R6 / R14	R7 / R15	R8 / R16	O
1			1549,5	1547,5	1546	1544	1544	1544,5	1546	1546,5	7
			1547	1545,5	1544	1545,5	1547	1547	1549	1551	
2			1549	1547	1546	1545	1544,5	1545	1545,5	1546	6
			1546	1544,5	1544	1546,5	1547	1547	1549,5	1550	
3			1548,5	1547,5	1546,5	1546	1545,5	1545	1545	1545	5
			1545	1544	1545	1547,5	1547	1547	1549	1549	

APPROVAZIONE / Approvals

ANSALDO Componenti				ISPETTORE / Inspectors		
NOME / Name	UV.PHO / NDE Lev.	FIRMA / Signature	DATA / Date	CLIENTE/AGENZIA / Customer/Agency	FIRMA / Signature	DATA / Date
MELZI	—	[signature]	9/10/96			

B 059.01 IE/0

ANSALDO
Componenti
Area Milano

Controllo dimensionale
Dimensional check

DCR 13118
Foglio / Sheet 2 di / of 2

COMMESSA / Job	CLIENTE / Customer	IMPIANTO / Plant	DOC. RIF. / Ref. doc.	Item	REV.

Oggetto / Object

Disegno / Drawing _____ fig _____

Stadio di lavorazione / Working step

Esame secondo / Check according to

Controllo / Control

Eseguito da / Performed by	Località / Place of test	Data / Date

Data emissione certificato / Date issuing certificate

Vista dal lato LS

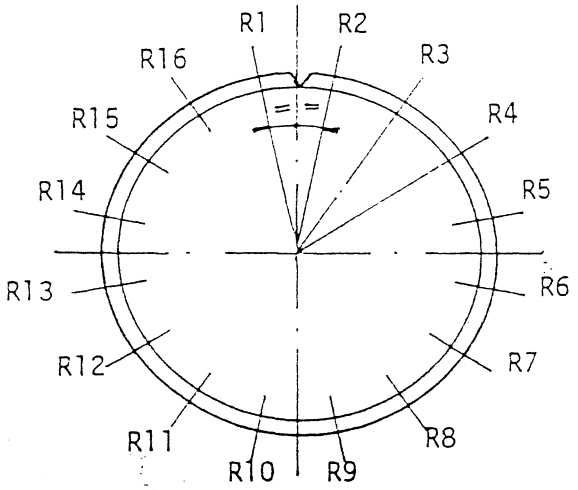

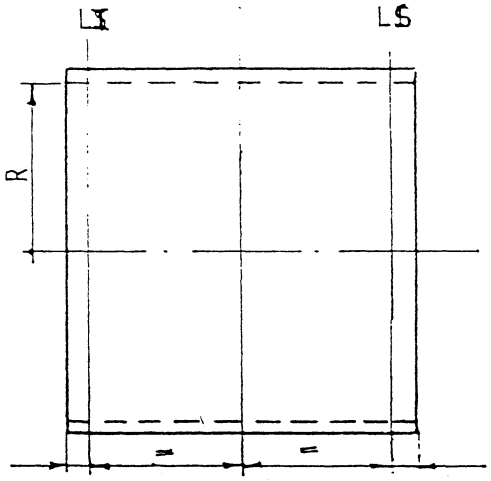

DIAMETRO INTERNO	TOLLER. DIAM.	SVILUPPO VIROLA	OVALITA' AMMESSA	

	Lt	Dm	R1 / R9	R2 / R10	R3 / R11	R4 / R12	R5 / R13	R6 / R14	R7 / R15	R8 / R16	O
4			1547	1547,5	1546,5	1547	1546	1545	1544	1544,5	5,5
			1543,5	1544	1546	1546	1546,5	1547	1549	1548	
5			1547	1548	1548	1548	1547	1545	1545	1547	6
			1547	1545	1544	1545	1547	1547,5	1550	1549	
6			1503,5	1503	1501,5	1501	1500,5	1500,5	1501,5	1503	5
			1502	1500	1498,5	1499	1501	1502,5	1503	1503,5	

~~6~~ 7

APPROVAZIONI / Approvals	ANSALDO Componenti				ISPETTORI / Inspectors		
	NOME / Name	UV.PnD NDE Lab.	FIRMA / Signature	DATA / Date	CLIENTE / AGENZIA / Customer / Agency	FIRMA / Signature	DATA / Date

B 059.01 IE/02

C.S.C. S.p.A. Schio (VI) Italy	QUALITY SYSTEM DOCUMENT	Document N° R.P.U.	
		Sheet 1 of 1	Rev. 0

RAPPORTO DI PROVA CON SPETTROMETRO DI MASSA AD ELIO

CLIENTE : ANSALDO ENERGIA

ORDINE N° : BC 176344

OGGETTO : GIUNTI BIMETALLICI

PROCEDURA : SP.07

DATA : 28-10-96

OPERATORE : LANARO ANDREA

La ditta C.S.C. S.P.A.dichiara che i sopra indicati componenti sono stati testati con spettrometro di massa ad elio senza aver riscontrato nessuna perdita nel range di $10X10^{-9}$ mbar x Lt / sec.

Timbro e firma operatore

ANDREA LANARO
II LEVEL CICPNDASNT TC-1A
LEAK TEST

Firma responsabile QA

F. Colvone

C.S.C. S.p.A. Schio (VI) Italy	QUALITY SYSTEM DOCUMENT	Document N° LP 2139 / 96.01
		Sheet 1 of 1 — Rev. 0

CERTIFICATO DI CONTROLLO LIQUIDI PENETRANTI
LIQUID PENETRANT CERTIFICATE

Piano C.Q. / *Q.C. Plan*: PCQ.2139 / 96.01

Commessa / *Shop Order*	Cliente / *Customer*	Ordine Cliente / *Purchase Order*	Commessa Cliente / *Customer Shop Order*
2139	ANSALDO	BC176344	
Oggetto / *Object*	**Disegno / *Drawing***	**Matricola N. / *Serial***	**Impianto / *Plant***
CILINDRO BABAR	620RM07273 Rev. 0		

NORMA O SPECIFICA / *SPECIFICATION*: ASME V art. 6

CLASSE DI ACCETT. / *ACCEPT. CRITERIA*: ASME VIII-DIV.1 App. 8

CONDIZIONI SUPERFICIALI / *SURFACE CONDITION*: ☐ COME SALDATO / *AS WELDED* ☐ MOLATO / *GROUND* ☐ SPAZZOLATO / *BRUSHED* ☐ COME LAMINATO / *AS ROLLED* ☐ LAVORATO DI MACCHINA / *MACHINED* ☐ SUPERFICIE GREZZA / *AS FORGED* ☒ COME CALANDRATO / *AS BENT* ☐

METODO DI CONTROLLO / *CONTROL METHOD*

	☒ SOLUBILE IN ACQUA / *WATER WASHABLE*		☐ POST EMULSIFICABILE / *POST EMULSIFICABLE*		☐ SOLUBILE IN SOLVENTE / *SOLVENT REMOVABLE*	
	☒ VISIBILE	☐ FLUORESC.	☐ VISIBILE	☐ FLUORESC.	☐ VISIBILE	☐ FLUORESC.
PULITORE / *CLEANER*	ACETONE					
PENETRANTE / *PENETRANT*	ARDROX 907PB					
EMULSIFICATORE / *EMULSIFIER*	/					
SOLVENTE / *REMOVER*	WATER					
RIVELATORE / *DEVELOPER*	ARDROX 9D6					
MARCA / *TRADE NAME*	BRENT					

PROCEDURA DI ISPEZIONE / *INSPECTION PROCEDURE*

PULITURA / *CLEANING*	ACETONE	ESSICAZIONE / *DRYING PROCESS*	5'IN AIR
APPLICAZIONE PENETRANTE / *PENETRANT APPLICATION*	WITH BRUSH	TEMPO MINIMO DI PENETRAZIONE / *PENETRATION MINIMUM TIME*	15'
RIMOZIONE PENETRANTE / *REMOVAL PENETRANT*	WATER AND CLOTHES	APPLICAZIONE EMULSIFICATORE / *EMULSIFIER APPLICATION*	/
APPLICAZIONE SVILUPPATORE / *DEVELOPER APPLICATION*	SPRAY	TEMPO MINIMO DI SVILUPPO / *DEVELOPING MINIMUM TIME*	10'
TEMPO MASSIMO DI LETTURA / *CHECKING TIME*		TEMPERATURA DELLA SUPERFICIE / *SURFACE TEMPERATURE*	20'

PROCEDIMENTO DI PULITURA / *CLEANING METHOD*: WATER AND CLOTHES

RISULTATI / *RESULTS*: ☒ CONFORME ALLA SPECIFICA / *ACC.TO SPECIFICATION* ☐ NON CONFORME ALLA SPECIFICA / *NOT ACC.TO SPECIFICATION* ☐ SCARTO / *REJECTED*

NOTE / *NOTES*: Vedi allegato LP
Prova effettuata da TORRESIN C.M.
metodo di prova diverso da quello indicato

	Esaminatore / *Examiner*	Ispettore Cliente / *Customer Inspector*	Ente Collaudatore / *Survayor Inspector*	Controllo Qualità / *Quality Control*	
Data: / *Date:*	10/09/96			10/09/96	
Nome: / *Name:*	SANTACATTERINA			F. CALVONE	
Firma: / *Sign:*	[signature] Level SNT-TC-1A			Calvone	

TORRESIN	CONTROLLO CON LIQUIDI PENETRANTI *LIQUID PENETRANT EXAMINATION*	LP 055/.1.. PAGE .....

CLIENTE : *Purchaser* CSC	N° ORDINE : *P. Order N°* 2139/96.03 REV 1	SIGLA : *Item* VIROLA IN ALLUMINIO

OGGETTO : LP EXAMINATION ON LONGITUDINAL WELDING AFTER BACK GOUGING
OBJECT

FASE DI LAVOR. : *Fabrication Step*	☐	BEFORE WELDING	☐	AFTER 1ST PASS
	☒	ON BACK GOUGING	☐	COMPLETED
	☐	COMPL. AFTER HYDR.	☐	.....
COND. SUPERF. : *Surface Status*	☐	AS WELDED	☒	GROUND
	☐	MACHINED	☒	BRUSHED

PROCEDURA DI CONTROLLO *Examination sequence*		LIQUIDI PENETRANTI *Liquid Penetrant*	
APPLIC. PENETR. CON : *Penetrant Application by*	SPRAY	VISIBILI & LAVABILI CON ACQUA *Visible & water washable*	
TEMPO DI PENETRAZ.: *Penetration Minim. Time*	20 min.	PULITORE : *Cleaner*	SOLVET
APPLICAZ. EMULSIFICAT. *Emulsifier application by*	//	PENETRANTE : *Penetrant*	RED W BATCH 3×/8199
RIMOZ. PENETR. CON : *Penetrant Removal by*	WATER	EMULSIFICATORE : *Emulsifier*	//
APPLICAZ. RIVELATORE : *Developer Application*	SPRAY	SOLVENTE : *Remover*	//
ESSICAZIONE CON : *Drying process by*	AIR	RIVELATORE *Developer*	ROTRIVEL U WHITE W BATCH III 8192
TEMPO DI SVILUPPO : *Developing Minim. time*	7 min.	LUNGH. ONDA LUCE : *Light wave length*	//

SCHIZZO :
Sketch SEE DWG

SPECIFICHE APPLICABILI : ASME V
Applicable Specifications

RISULTATI dell' ESAME :
Examination Results

SATISFACTORY AS PER ASME VIII DIV. 1 APP. VIII

DATE	INSPECTORS	INSPECTORS
10/08/96	TORRESIN Servizio Controllo Qualità	

C.S.C. S.p.A.
Schio (VI) Italy

QUALITY SYSTEM DOCUMENT

Document N° LP 2139 / 96-02

Sheet 1 of 1 | Rev. 0

CERTIFICATO DI CONTROLLO LIQUIDI PENETRANTI
LIQUID PENETRANT CERTIFICATE

Piano C.Q. / *Q.C. Plan*: PCQ. 2139/96.01

Commessa / *Shop Order*	Cliente / *Customer*	Ordine Cliente / *Purchase Order*	Commessa Cliente / *Customer Shop Order*
2139	ANSALDO	BC 176344	

Oggetto / *Object*	Disegno / *Drawing*	Matricola N. / *Serial*	Impianto / *Plant*
CILINDRO BABAR	620RM07273 Rev. 0		

NORMA O SPECIFICA / *SPECIFICATION*: ASME V art. 6

CLASSE DI ACCETT. / *ACCEPT. CRITERIA*: ASME VIII-DIV.1 App. 8

CONDIZIONI SUPERFICIALI / *SURFACE CONDITION*:
- [ ] COME SALDATO / *AS WELDED*
- [ ] SPAZZOLATO / *BRUSHED*
- [ ] LAVORATO DI MACCHINA / *MACHINED*
- [x] COME CALANDRATO / *AS BENT*
- [ ] MOLATO / *GROUND*
- [ ] COME LAMINATO / *AS ROLLED*
- [ ] SUPERFICIE GREZZA / *AS FORGED*
- [ ]

METODO DI CONTROLLO / *CONTROL METHOD*

	[x] SOLUBILE IN ACQUA / *WATER WASHABLE*		[ ] POST EMULSIFICABILE / *POST EMULSIFICABLE*		[ ] SOLUBILE IN SOLVENTE / *SOLVENT REMOVABLE*	
	[x] VISIBILE	[ ] FLUORESC.	[ ] VISIBILE	[ ] FLUORESC.	[ ] VISIBILE	[ ] FLUORESC.
PULITORE / *CLEANER*	ACETONE					
PENETRANTE / *PENETRANT*	ARDROX 907 PB					
EMULSIFICATORE / *EMULSIFIER*	/					
SOLVENTE / *REMOVER*	WATER					
RIVELATORE / *DEVELOPER*	ARDROX 9D6					
MARCA / *TRADE NAME*	BRENT					

PROCEDURA DI ISPEZIONE / *INSPECTION PROCEDURE*

PULITURA / *CLEANING*	ACETONE	ESSICAZIONE / *DRYING PROCESS*	5' IN AIR
APPLICAZIONE PENETRANTE / *PENETRANT APPLICATION*	WITH BRUSH	TEMPO MINIMO DI PENETRAZIONE / *PENETRATION MINIMUM TIME*	15'
RIMOZIONE PENETRANTE / *REMOVAL PENETRANT*	WATER AND CLOTHES	APPLICAZIONE EMULSIFICATORE / *EMULSIFIER APPLICATION*	/
APPLICAZIONE SVILUPPATORE / *DEVELOPER APPLICATION*	SPRAY	TEMPO MINIMO DI SVILUPPO / *DEVELOPING MINIMUM TIME*	10'
TEMPO MASSIMO DI LETTURA / *CHECKING TIME*		TEMPERATURA DELLA SUPERFICIE / *SURFACE TEMPERATURE*	20'

PROCEDIMENTO DI PULITURA / *CLEANING METHOD*: WATER AND CLOTHES

RISULTATI / *RESULTS*:
- [x] CONFORME ALLA SPECIFICA / *ACC.TO SPECIFICATION*
- [ ] NON CONFORME ALLA SPECIFICA / *NOT ACC.TO SPECIFICATION*
- [ ] SCARTO / *REJECTED*

NOTE / *NOTES*: Vedi allegato fax certificato LP
Metodo di controllo diverso da quello indicato

	Esaminatore / *Examiner*	Ispettore Cliente / *Customer Inspector*	Ente Collaudatore / *Survayor Inspector*	Controllo Qualità / *Quality Control*	
Data: / *Date:*	21/09/96			24/09/96	
Nome: / *Name:*	SANTACATTERINA			F. CALVONE	
Firma: / *Sign:*	Level SNT-TC-1A			Calvone	

centrostampa - schio

TORRESIN CARPENTERIE METALLICHE S.r.l.

CONTROLLO CON LIQUIDI PENETRANTI
LIQUID PENETRANT EXAMINATION

LP 055/..8.
PAGE .....

CLIENTE : *Purchaser* CSC	N° ORDINE : *P. Order N°* 2139/96.03 REV 1	SIGLA : *Item* VIROLA IN ALLUMINIO

OGGETTO : LP EXAMINATION ON CIRCUMFERENTIAL WELDING AFTER BACK GOUGING
OBJECT

FASE DI LAVOR. : *Fabrication Step*	☐	BEFORE WELDING	☐	AFTER 1ST PASS
	☒	ON BACK GOUGING	☐	COMPLETED
	☐	COMPL. AFTER HYDR.	☐	.....
COND. SUPERF. : *Surface Status*	☐	AS WELDED	☒	GROUND
	☐	MACHINED	☒	BRUSHED

PROCEDURA DI CONTROLLO *Examination sequence*		LIQUIDI PENETRANTI *Liquid Penetrant*	
APPLIC. PENETR. CON : *Penetrant Application by*	SPRAY	VISIBILI & LAVABILI CON ACQUA *Visible & water washable*	
TEMPO DI PENETRAZ. : *Penetration Minim. Time*	20 min.	PULITORE : *Cleaner*	SOLVET
APPLICAZ. EMULSIFICAT. *Emulsifier application by*	//	PENETRANTE : *Penetrant*	REF W BATCH 1 x 18188
RIMOZ. PENETR. CON : *Penetrant Removal by*	WATER	EMULSIFICATORE : *Emulsifier*	//
APPLICAZ. RIVELATORE : *Developer Application*	SPRAY	SOLVENTE : *Remover*	//
ESSICAZIONE CON : *Drying process by*	AIR	RIVELATORE *Developer*	ROTAGEL D WHITE W BATCH N° 8132
TEMPO DI SVILUPPO : *Developing Minim. time*	7 min.	LUNGH. ONDA LUCE : *Light wave length*	//

SCHIZZO
Sketch

SEE DWG

SPECIFICHE APPLICABILI : ASME V
Applicable Specifications

RISULTATI dell' ESAME :
Examination Results

SATISFACTORY AS PER ASME VIII DIV. 1 APP. VIII

DATE	INSPECTORS	INSPECTORS
21/09/96	TORRESIN CARPENTERIE METALLICHE S.r.l. Servizio Controllo Qualità Bagan Vanni	

C.S.C. S.p.A. Schio (VI) Italy	QUALITY SYSTEM DOCUMENT	Document N° WPS 117.1 / 94	Sheet 1 of 2	Rev. /

QW 482 WELDING PROCEDURE SPECIFICATION
SPECIFICA DI PROCEDIMENTO DI SALDATURA

Company Name / *Nome Ditta*: CSC SpA — By / *A cura di*: F. ANSELMI

Welding Procedure Spec. No. / *Specifica Proced. Saldat. N.*: 117.1 — Date / *Data*: 25/10/94 — Supporting PQR No.(s) / *Relativa a PQR N.(i)*: 117

Welding Process(es) / *Procedimento(i) di Saldatura*: GMAW — Type(s) / *Tipo(i)*: MANUAL (Automatic, Manual, Machine, Semi-Auto.) / *(Automatico, Manuale, A Macchina, Semi-Autom.)*

QW-402 JOINTS / *GIUNTI*

Joint Design / *Forma del giunto*: SEE SKETCH

Backing / *Sostegno al rovescio* — (Yes) / *(Si)*: YES — (No) / *(No)*:

Backing material / *Materiale di sostegno* — (Type) / *(Tipo)*: WELD METAL

Details / *Dettagli*

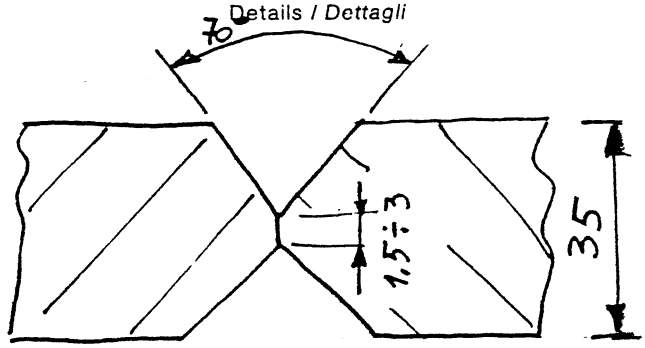

QW-403 BASE METALS / *MATERIALI BASE*

P-No. / *P-N.*: 25 — Group. No. / *Gruppo N.*: SB209 — to P-No. / *con P-N.*: 25 — Group No. / *Gruppo N.*: SB 209

or./opp. Specification type and grade / *Tipo di specifica e grado*: SB 209 5083 — to Specification Type and grade / *con Tipo di specifica e grado*: SB-209 5083

or./opp. Chem. Analysis and Mech. Prop. / *con Analisi Chimica e Caratter. Mecch.*:

Thickness Range / *Campo di Spessori*:

Base Metal / *Mat. Base*	Groove / *Cianfrino*	4 ÷ 200 mm	Fillet / *Angolo*	N.A.
Deposited Weld Metal / *Materiale d'apporto*	Groove / *Cianfrino*	200 mm max	Fillet / *Angolo*	200 mm max
Pipe Dia. Range / *Gamma Diamet. del Tubo*	Groove / *Cianfrino*	2" ½ and over	Fillet / *Angolo*	2" ½ and OVER

Other / *Altri*:

QW-404 FILLER METALS / *MATERIALI D'APPORTO*

F.No. / *F-N.*: 22 — Other / *Altri*: N.A. — A-No. / *A-N.*: N.A. — Other / *Altri*: N.A

Spec. No. (SFA) / *Spec. N. (SFA)*: 5.10-69 — AWS No. (Class) / *AWS N. (Classe)*: ER 5356

Size of filler metals / *Misura dei Materiali d'apporto*: ϕ 1.6 (Electrode, Cold wire, Hot wire etc.) / *(Elettrodo, Filo freddo, Filo caldo ecc.)*

Electrode - Flux (Class) / *Elettrodo - Flusso (Classe)*: N.A.

Flux Trade Name / *Marca del Flusso*: N.A.

Consumable Insert / *Inserto fusibile*: N.A.

C.S.C. S.p.A.
Schio (VI) Italy

QUALITY SYSTEM DOCUMENT

Document N° WPS 117.1.94

Sheet 2 of 2 Rev. /

QW-405 POSITIONS / *POSIZIONI*

Position(s) of Groove / *Posizioni del Cianfrino*: 1G

Welding Progression / *Progressione di saldat.*: Up / *Asc.* N.A. Down / *Disc.* N.A.

Position(s) of Fillet / *Posizione(1) dell'angolo*: 1F

QW-407 POSTWELD HEAT TREATMENT / *TRATT. TERM. DOPO SALDATURA*

Temperat. Range / *Gamma di Temper.*: /

Time Range / *Gamma di Tempo*: /

Other / *Altri*: /

QW-406 PREHEAT / *PRERISCALDO*

Preheat Temp. Min. / *Temp. di Preriscaldo Min.*: 15°C

Interpass Temp. Max / *Temp. di interpass Max*: 250°C

Preheat Maintenance / *Mantenim. Preriscaldo*: N.A.

Continuous or special heating where applicable should be rec.
Eventuali Prerisc. continui o spec. dovrebbero essere registrati

QW-408 GAS

Shielding Gas(es) / *Gas di Protezione*: ARGON

Percent. Composition (Mixture) / *Composizione Perc. Miscela*: 99.95%

Flow Rate / *Portata*: 11÷20

Gas Backing / *Gas di Protez. al rovescio*: N.A.

Trailing Shielding gas Compos. / *Composiz. Gas Protettivo supplementare*: N.A.

QW-409 ELECTRICAL CHARACTERISTICS / *CARATTERISTICHE ELETTRICHE*

Current AC or DC / *Corrente alternata o cont.*: DC

Polarity / *Polarità*: REVERSE

Other: / *Altro*:

Amps (Range) / *Gamma di corrente*: 290÷380

Volts (Range) / *Gamma di tensione*: 27÷30

Tungsten Electrode Size and Type / *Misura e Tipo Elettrodo di Tungsteno*: N.A.
(Pure Tungsten, 2% Thoriated etc.)
(Tungsteno puro, 2% Toriato ecc.)

Mode of Metal Trasfer for GMAW / *Modo di Trasferim. del metallo per il MIG*: SPRAY ARC
(Spray arc, short circuiting, etc.)
(Arco spruzzato, corto circuitato, ecc.)

Electrode Wire feed speed range / *Gamma di veloc. di avanz. del filo*: N.A.

QW-410 TECHNIQUE / *TECNICA*

String or Weave Bead / *Passate strette o larghe*: STRING

Orifice or Gas Cup Size / *Misura dell'ugello*: Ø 16 mm

Initial and Interpass Cleaning (Brushing, Grinding) / *Pulitura iniziale ed intermedia (Spazzolatura, Molatura)*: BRUSHING and GRINDING

Metod of Back Gouging / *Metodo di ripresa a rovescio*: GRINDING

Oscillation / *Oscillazione*: N.A.

Contact Tube to Work Distance / *Distanza pezzo-tubetto porta corrente*: 15÷25 mm

Multiple or Single Pass / *Passate singole o multiple*: MULTIPLE

Multiple or Single Electrodes / *Elettrodi: singoli o multipli*: SINGLE

Travel Speed (Range) / *Campo della velocità di avanzam.*: 21÷30 cm/min

Peening / *Martellatura*: N.A.

Other / *Altro*: N.A.

Weld Layer(s) *Passata(e)*	Process. *Procedim.*	Filler Metal *Metallo d'apporto*		Current *Corrente*		Volt Range *Gamma di tensione*	Travel Speed Range *Gamma di Velocità Avanzam.*	Other *Altro* Remarks Comments *Note Commenti*
		Class *Classe*	Dia. *Diametro*	Type Polar. *Polarità*	Amp. Range *Gamma di corrente*			
1÷n	GMAW	ER5356	1.6 mm	REVERSE	290÷320	27÷29	21÷30 cm/min	

Data: Date:	Preparato: Prepared:	Controllato: Controlled:	Approvato: Approved:	Archivio No.: Arch.:
24/10/94	FABRIZIO ANSELMI EUROPEAN WELDING ENGINEER			

C.S.C. S.p.A.
Schio (VI) Italy

QUALITY SYSTEM DOCUMENT

Document N° PQR 117.1/94

Sheet 1 of 2 | Rev. 0

QW 483 PROCEDURE QUALIFICATION RECORD
RAPPORTO DI QUALIFICA DI PROCEDIMENTO

Procedure Qualification Record No. / *Rapporto di qualifica di Procedimento N.* 117.1 — Date / *Data* 8/3/95

WPS No. / *WPS N.* 117.1/94

Welding Process(es) / *Procedimento(i) di saldatura* GTAW

Types (Manual, Automatic, Semi-Auto) / *Tipi (Manuale, Automatico, Semi-Autom.)* MANUAL

QW-402 JOINTS / *GIUNTI*

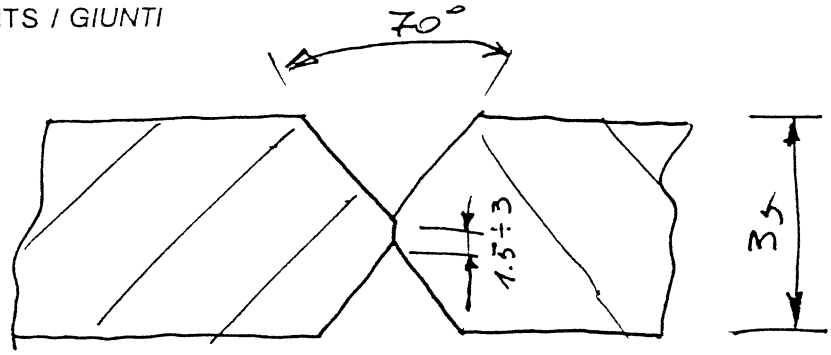

Groove Design of Test Coupon
Schizzo dello smusso del tallone

QW-403 BASE METALS / *MATERIALI BASE*

Material Spec. / *Spec. Materiale* SB 209 5083

Type or Grade / *Tipo o Grado*

P-No. / *P-N.* 25 to P-No. / *con P-N.* 25

Thickness of Test Coupon / *Spessore Tallone* 35 mm

Diameter of Test Coupon / *Diametro Tallone* N.A.

Other / *Altro*

QW-404 FILLER METALS / *MATERIALI D'APPORTO*

Weld Metal Analysis A-No. / *Analisi del metallo depositato A-N.* /

Size of Filler Metal / *Misura dei Mater. d'apporto* ϕ 1.6

Filler Metal F-No. / *Mat. d'apporto F-N.* 22

SFA Specification / *Specificazione SFA* 5.10-69

AWS Classification / *Classificazione AWS* ER 5356

Other / *Altro*

QW-405 POSITION / *POSIZIONE*

Position of Groove / *Posizione del Cianfrino* 1G

Weld Progression (Uphill, Downhill) / *Progressione di Saldat. (Asc., Disc.)* /

Other / *Altro*

QW-406 PREHEAT / *PRERISCALDO*

Preheat Temp. / *Temperat. Preriscaldo* 15°

Interpass. Temp. / *Temperatura d'interpass* 250°

Other / *Altro*

QW-407 POSTWELD HEAT TREATMENT
TRATT. TERMICO DOPO SALDATO

Temperature / *Temperatura*

Time / *Tempo*

Other / *Altro*

QW-408 GAS

Type of Gas or Gases / *Tipo(i) di Gas* ARGON

Composition of Gas Mixture / *Composizione della Miscela di Gas* 99.95 %

Other / *Altri* /

QW-409 ELECTRICAL CHARACTERISTICS
CARATTERISTICHE ELETTRICHE

Current / *Corrente* DC

Polarity / *Polarità* REVERSE

Amps. / *Ampere* 330 Volts / *Tensione* 29

Tungsten Electrode Size / *Misura dell'Elettrodo di Tungsteno* N.A.

Other / *Altro* SPRAY ARC

QW-410 TECHNIQUE / *TECNICA*

Travel Speed / *Velocità di avanzam.* ~25 cm/min

String or Weave Bead. / *Passate strette o larghe* STRING

Oscillation / *Oscillazione* N.A.

Multipass ore Single Pass / *Passate multiple o singole* MULTIPLE

Multiple or Single Electrodes / *Elettrodi singoli o multipli* SINGLE

Other / *Altri*

centrostampa - schio

C.S.C. S.p.A.
Schio (VI) Italy

QUALITY SYSTEM DOCUMENT

Document N° PQR 117.1.94

Sheet 2 of 2 | Rev. 0

QW-150 TENSILE TEST / *PROVA DI TRAZIONE*

Specimen No. *Provino N.*	Width *Larghezza*	Thickness *Spessore*	Area *Superficie mm²*	Ultimate Total Load *Carico Totale Finale [N]*	Ultimate Unit Stress *Carico Unitario Rottura [MPa]*	Type of Failure and Location *Tipo di Rottura e Posizione*
T1 A	25	16.2	405	109880	271	WELDING
T1 B	25.1	16.3	409.1	111040	271	BASE MAT
T2 A	25	16.6	415	109350	263	WELDING
T2 B	25	16.3	407.5	110600	271	BASE MAT

QW-160 GUIDED BEND TESTS / *PROVA DI PIEGA*

Type and Figure No. *Tipo e Figura N.*	Result *Risultato*
1	ok
2	ok
3	ok
4	ok

α = 180°
a = 6t

QW-170 TOUGHNESS TESTS / *PROVE DI RESILIENZA*

Specimen No. *Provino N.*	Notch Location *Posizione Intagl.*	Notch Type *Tipo Tacca*	Test. Temp. *Temperatura di prova*	Impact Values *Resilienza*	Lateral Exp. *Espansione Laterale*		Drop Weight *Peso di caduta*	
					% Shear *% Sez. di Rott.*	mm	Break *Rottura*	No Break *Non Rottura*

QW-180 FILLET WELD TEST / *PROVA DI SALDATURA AD ANGOLO*

Result - Satisfactory: Yes ___ No ___
Risultato - Soddisfacente: Si ___ No ___

Penetration into Parent Metal: Yes ___ No ___
Penetrazione del Mat. Base: Si ___ No ___

Macro Results / *Controllo Macro*: ok See Test n° 3795

OTHER TESTS / *ALTRI TEST*

Type of Test / *Tipo di Test*: /

Deposit Analysis / *Analisi Mat. Deposit.*: /

Other / *Altri*: /

Welder's Name / *Nome del Saldatore*: Bruno Geachelin

Clock No. / *N. Cartellino*: /

Stamp. No. / *N. Punzone*: 3

Tests conduced by / *Prove condotte da*: G. TOLDO Lab. S. MARCO

Laboratory Test No. / *Certificato N.*: 3795

We certify that the statements in this record are correct and that the test welds were prepared welded and tested in accordance with the requirements of Section IX of the ASME Code.

Si certifica che le dichiarazioni fatte in questo rapporto sono esatte e che le saldature di prova furono preparate, eseguite e controllate secondo le esigenze della Sezione IX del Codice ASME.

Manufacturer / *Costruttore*: C.S.C. S.p.A. SCHIO (VI)

Date / *Data*: 8/3/95

By / *A cura di*: [signature]

Data: Date:	Preparato:	Controllato: Controlled:	Approvato: Approved:	Archivio No.: Arch.:
8/3/95	FABRIZIO ANSELMI EUROPEAN WELDING ENGINEER [signature]			

C.S.C. S.p.A. Schio (VI) Italy	QUALITY SYSTEM DOCUMENT	Document N° WPS 117.02/96	
		Sheet 1 of 2	Rev. 0

QW 482 WELDING PROCEDURE SPECIFICATION
SPECIFICA DI PROCEDIMENTO DI SALDATURA

Company Name / *Nome Ditta*: CSC SPA — By / *A cura di*: A. DAL SANTO

Welding Procedure Spec. No. / *Specifica Proced. Saldat. N.*: — Date / *Data*: 10/10/96 — Supporting PQR No.(s) / *Relativa a PQR N.(i)*: 117

Welding Process(es) / *Procedimento(i) di Saldatura*: GMAW — Type(s) / *Tipo(i)*: MANUAL (Automatic, Manual, Machine, Semi-Auto.) / *(Automatico, Manuale, A Macchina, Semi-Autom.)*

QW-402 JOINTS / *GIUNTI*

Joint Design / *Forma del giunto*: See Sketch

Backing / *Sostegno al rovescio* (Yes) / *(Si)*: X (No) / *(No)*: /

Backing material / *Materiale di sostegno* (Type) / *(Tipo)*: Base metal

Details / *Dettagli*

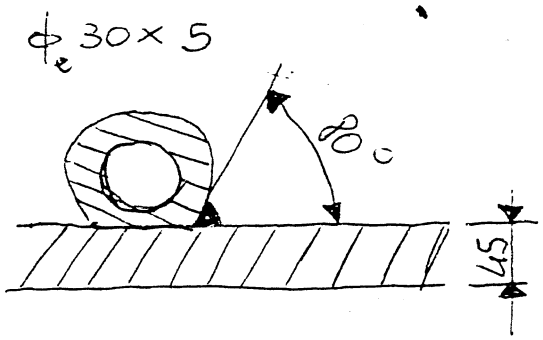

QW-403 BASE METALS / *MATERIALI BASE*

P-No. / *P-N.*: 25 — Group. No. / *Gruppo N.*: SB 209 — to P-No. / *con P-N.*: / — Group No. / *Gruppo N.*: Al 6060 UNI 9006

or./opp. Specification type and grade / *Tipo di specifica e grado*: SB 209 5083 — to Specification Type and grade / *con Tipo di specifica e grado*: Al 6060

or./opp. Chem. Analysis and Mech. Prop. / *con Analisi Chimica e Caratter. Mecch.*: /

Thickness Range / *Campo di Spessori:*

	Groove / *Cianfrino*	Fillet / *Angolo*
Base Metal / *Mat. Base*	NA	ALL
Deposited Weld Metal / *Materiale d'apporto*	NA	ALL
Pipe Dia. Range / *Gamma Diamet. del Tubo*	NA	ALL

Other / *Altri*:

QW-404 FILLER METALS / *MATERIALI D'APPORTO*

F.No. / *F-N.*: 22 — Other / *Altri*: NA — A-No. / *A-N.*: NA — Other / *Altri*: NA

Spec. No. (SFA) / *Spec. N. (SFA)*: — AWS No. (Class) / *AWS N. (Classe)*: ER 5356

Size of filler metals / *Misura dei Materiali d'apporto*: φ 1,2 (Electrode, Cold wire, Hot wire etc.) / *(Elettrodo, Filo freddo, Filo caldo ecc.)*

Electrode - Flux (Class) / *Elettrodo - Flusso (Classe)*: NA

Flux Trade Name / *Marca del Flusso*: NA

Consumable Insert / *Inserto fusibile*: NA

C.S.C. S.p.A.
Schio (VI) Italy

QUALITY SYSTEM DOCUMENT

Document N° _____ WPS 11F.02.96

Sheet 2 of 2 | Rev. 0

QW-405 POSITIONS / *POSIZIONI*

Position(s) of Groove / *Posizioni del Cianfrino*: N.A.

Welding Progression / *Progressione di saldat.*: Up / *Asc.* N.A. Down / *Disc.* N.A.

Position(s) of Fillet / *Posizione(1) dell'angolo*: 1F

QW-407 POSTWELD HEAT TREATMENT / *TRATT. TERM. DOPO SALDATURA*

Temperat. Range / *Gamma di Temper.*: N.A.

Time Range / *Gamma di Tempo*: N.A.

Other / *Altri*: _____

QW-406 PREHEAT / *PRERISCALDO*

Preheat Temp. Min. / *Temp. di Preriscaldo Min.*: 15°

Interpass Temp. Max / *Temp. di interpass Max*: 200°C

Preheat Maintenance / *Mantenim. Preriscaldo*: N.A.

Continuous or special heating where applicable should be rec.
Eventuali Prerisc. continui o spec. dovrebbero essere registrati

QW-408 GAS

Shielding Gas(es) / *Gas di Protezione*: ARGON 5.0

Percent. Composition (Mixture) / *Composizione Perc. Miscela*: 99.99%

Flow Rate / *Portata*: 12 ÷ 14 Lt/min

Gas Backing / *Gas di Protez. al rovescio*: N.A.

Trailing Shielding gas Compos. / *Composiz. Gas Protettivo supplementare*: N.A.

QW-409 ELECTRICAL CHARACTERISTICS / *CARATTERISTICHE ELETTRICHE*

Current AC or DC / *Corrente alternata o cont.*: DC

Polarity / *Polarità*: Reverse

Other: / *Altro*: _____

Amps (Range) / *Gamma di corrente*: 290 ÷ 380

Volts (Range) / *Gamma di tensione*: 27 ÷ 30

Tungsten Electrode Size and Type / *Misura e Tipo Elettrodo di Tungsteno*: NA
(Pure Tungsten, 2% Thoriated etc.)
(Tungsteno puro, 2% Toriato ecc.)

Mode of Metal Trasfer for GMAW / *Modo di Trasferim. del metallo per il MIG*: SPRAY ARC
(Spray arc, short circuiting, etc.)
(Arco spruzzato, corto circuitato, ecc.)

Electrode Wire feed speed range / *Gamma di veloc. di avanz. del filo*: 21 ÷ 30 cm/min

QW-410 TECHNIQUE / *TECNICA*

String or Weave Bead / *Passate strette o larghe*: STRING

Orifice or Gas Cup Size / *Misura dell'ugello*: ϕ 16 mm

Initial and Interpass Cleaning (Brushing, Grinding) / *Pulitura iniziale ed intermedia (Spazzolatura, Molatura)*: BRUSHING AND GRINDING

Metod of Back Gouging / *Metodo di ripresa a rovescio*: NA

Oscillation / *Oscillazione*: NA

Contact Tube to Work Distance / *Distanza pezzo-tubetto porta corrente*: 15 ÷ 25 mm

Multiple or Single Pass / *Passate singole o multiple*: SINGLE

Multiple or Single Electrodes / *Elettrodi: singoli o multipli*: SINGLE

Travel Speed (Range) / *Campo della velocità di avanzam.*: 21 ÷ 30 cm/min

Peening / *Martellatura*: NA

Other / *Altro*: NA

Weld Layer(s) *Passata(e)*	Process. *Procedim.*	Filler Metal *Metallo d'apporto* Class *Classe*	Filler Metal Dia. *Diametro*	Current *Corrente* Type Polar. *Polarità*	Current Amp. Range *Gamma di corrente*	Volt Range *Gamma di tensione*	Travel Speed Range *Gamma di Velocità Avanzam.*	Other *Altro* Remarks Comments *Note Commenti*
1÷N	GMAW	EN 5356	1,2 mm	DC Reverse	290 ÷ 380	27 ÷ 30	21 ÷ 30 cm/min	

Data: Date:	Preparato: Prepared:	Controllato: Controlled:	Approvato: Approved:	Archivio No.: Arch.:
10/10/96	A. DAL SANTO (ADELUCIO DAL SANTO, EUROPEAN WELDING TECHNOLOGIST)	F. Colvano		

centrostampa - schio

C.S.C. S.p.A.
Schio (VI) ITALY

QUALITY SYSTEM DOCUMENT

Document N. IM. 2139 / 96.01

Sheet 1 of 1 | Rev. 0

IDENTIFICAZIONE MATERIALI
MATERIAL IDENTIFICATION

Piano C.Q. / *Q.C.Plan*: PCQ. 2139 / 96.01

Commessa / *Shop Order*	Cliente / *Customer*	Impianto / *Plant*	Commessa Cliente / *Customer Shop Order*
2139	ANSALDO		

Oggetto / *Object*	Matricola / *Serial*	Ordine Cliente / *Purchase Order*
CILINDRO ALL.		BC 176344

N. Disegno / *Drawing No*	N. Pos. o Descrizione Membrature / *Structural components Pos. No. or Description*	Acciaieria o Fornit. / *Steelworks or Supplier*	N. Certific. / *Cert. No.*	N. Colata / *Casting No*
1783	01 - LAMIERA	ALCOA	05200-96	86197A02
1783	01 - LAMIERA	ALCOA	05200-96	86197A04
1783	04 - ANELLO	* DEMBIERMONT	69.293/1	31C.325.95
1783	03 - ANELLO DI FONDO	* //	69.293/2	3271
1783	02 - ANELLO DI TESTA	* //	69.293/3	3271
630RM07009	FILO APPORTO	ETC	1621	26971
"	TUBO COLLETTORE	TAU M.	FAX	
"	TUBO RAFFREDDAMENTO	TAU M.	FAX	
"	SUPPORTI ASSIALI - RADIALI	TAU M.	A27734	540837
"	FILO APPORTO CIRCUITO	ALCOA	B.1517	14443
"	GIUNTI BIMETALLICI	T+C	114047	270370
		T+C	050959	K0678

* CERTIFICATI IN REV. 1

Data: / *Date:*	Preparato: / *Prepared:*	Controllato: / *Controlled:*	Archivio: / *File:*
18/07/96	F. Colucci	A. Dal Santo	

Inspection Certificate

ALCOA ITALIA S.P.A.
DIVISIONE LAMINATI

DNV Sistema Qualità Certificato

ALCOA

FUSINA - ITALIA DATA : 02.08.96	N.AVV.SPEDIZ. :
DATE	N.PACKING LIST
CLIENTE : C.S.C. SPA	LEGA-STATO : 5083 H111
CUSTOMER	ALLOY-TEMPER
CONFERMA-ANNO : 05200-96	N.POS.-N.LOTTO : 01-10
CONF. OF ORDER	N.ITEM-N.LOT
DENOM.MATERIALE : EN AW 5083 H111	DIMENSIONI (mm): 1500 x 5000 x 45
PRODUCT	DIMENSIONS
NORMA COLLAUDO : EN 485-2 EN 573-3	
TERMS OF DELIVERY	
N.ORDINE : 2139/96.01 ORDER NO.	

RISULTATI DELLE PROVE / TEST RESULTS

NR.	Rp(0.2) N/mm2	Rm N/mm2	A %
01	134.5	286.5	20.33
02	140.7	292.6	22.27

COPIA CONFORME ALL'ORIGINALE
SCHIO (VI)

COMPOSIZIONE CHIMICA / CHEMICAL COMPOSITION

N.	NUMERO DI COLATA CAST No.	Si %	Fe %	Cu %	Mn %	Mg %	Zn %	Ti %	Cr %	Ni %	Zr %
01	86197B02	0.225	0.285	0.035	0.530	4.735	0.046	0.022	0.095	0.001	0.000
02	86197A04	0.130	0.235	0.015	0.508	4.585	0.028	0.022	0.105	0.000	0.000

Note / Remarks

PN. A00552 A00554 C.86197B02
PN. A00555 A00556 C.86197A04
KG 3678

Firma / Signature WORKS INSPECTOR
P.I. BONAZZA T.

Soc. Cooperativa Tipografica s.c.r.l. - Padova

FORGES
M. DEMBIERMONT S.A.
S.A. CAPITAL 18.461.500 F — R.C. AVESNES B 572020154
59330 HAUTMONT (NORD) B.P. 89
TELEFAX 03.27.69.73.85 TÉL. : 03.27.69.73.81 (Service contrôle)
03.27.69.73.73 (Standard)

N° Classification / *Classification Nr* :	4-1
Modèle / *Exibit* :	18 C Rev 04
Page : 1	/2

Rapport Certifié d'Essais de Matériaux N°
CERTIFIED MATERIAL TEST REPORT N° 69.293/1 Rev. 1

CLIENT / *CUSTOMER* : C.S.C. SPA SCHIO

Références Commandes Client : 2139/96.02
FAX DU 12/06/96 CLIENT C.S.C
Customer order References

Poste / *Item*	Nombre au poste / *Qtty*	DÉSIGNATION DES PIÈCES / *PARTS DESCRIPTION*	Pièces couvertes par ce rapport / *Parts concerned by report* — Ajout. / *Add.*	Nombre / *Qtty*	N° essais / *Test Nr*	*Pièces déjà livrées* / *Parts delivered*	Total
1	1	COURONNE/ANELLO DE 3115 DI 3009 EP 60 SVT CROQUIS REP A (3EX)		1			1

COPIA CONFORME AL ORIGINALE
C.S.C. S.p.A.
SCHIO (VI)

Qualité / *QUALITY*
AL MG 4,5 MN0,7 (5083) SVT NFA 50-451 OCT 86
ETAT NATUREL-R>= 275 MPA-E0,2 >= 125 MPA
A% >= 10 - SENS LONG
CARACTERISTIQUES A TITRE INDICATIF

N° Coulée / *Heat Number* : 31C.325.05.

Annexes jointes / *Attached appendices*

		Page			Page
I	— Analyse - Essais mécaniques *Analysis - Méc. tests*	2	V	— Magnétique *Magnetic Particle*	
II	— Traitement thermique *Heat treatment*		VI	— Examen macrographique *Macrographic exam.*	
III	— Ultra Sons *Ultrasonic*		VII	— Examen micrographique *Micrographic exam.*	
IV	— Ressuage *Liquide penetrant*		VIII	— Dureté *Hardness*	2

Pièces jointes / *Enclosures*

	Page
Certificat visuel et dimensionnel IX — Visual and dimensionnal P.V.	

LE CONTENU DE CE RAPPORT EST CERTIFIÉ ÊTRE VÉRITABLE ET PRÉCIS POUR LA COULÉE IDENTIFIÉE DANS CE RAPPORT. TOUS LES RÉSULTATS DES ESSAIS ET OPÉRATIONS EFFECTUÉS PAR DEMBIERMONT *ET SES SOUS-TRAITANTS SONT CONFORMES AUX EXIGENCES DE LA SPECIFICATION DU MATÉRIEL IDENTIFIÉE DANS CE RAPPORT ET EXIGENCES ADDITIONNELLES DE LA COMMANDE CLIENT IDENTIFIÉE PLUS HAUT.*

THE CONTENT OF THIS REPORT IS CERTIFIED TO BE TRUE AND CORRECT FOR THE HEAT IDENTIFIED IN THIS REPORT. ALL TESTS RESULTS AND OPERATIONS PERFORMED BY DEMBIERMONT *AND THEIR SUB-CONTRACTORS COMPLY WITH THE REQUIREMENTS OF THE MATERIAL SPECIFICATION IDENTIFIED IN THIS REPORT AND ADDITIONAL REQUIREMENTS OF THE ABOVE REFERENCED CUSTOMER PURCHASE ORDER.*

L'Inspecteur des essais
The test Inspector

Le Chef du Bureau des essais
The testing department Manager

FMD C

HAUTMONT LE: 03 SEP. 1996

15 JAN 1997

FORGES MAURICE DEMBIERMONT S.A.

N° Classification 4-1

Modèle 18 D.2 Rév. 02

CERTIFICAT D'ANALYSE - ESSAIS MÉCANIQUES - Annexe 1 -

CLIENT : C.S.C SPA CERTIFICAT N° : 69293/1 Rév.1

Nuance : AL MG 4,5 MN 0,7

IMPRIMERIE LEAUD - Hautmont

Origine du Métal	Numéro de Coulée	ANALYSE										
		Cu	Si	Mn	Mg	Fe	Ni	Cr		Zn	Ti	Zr
Marbigny	31C.325.95	0,011	0,138	0,627	4,701	0,169		0,115		0,011	0,037	

RÉSULTATS D'ESSAIS MÉCANIQUES						DE COULÉE OF CAST	DURETÉ BRINELL sur Pièce
N° de Coulée	$E_{0,2\%}$ MPA	R MPA	A %	Σ %	K	TT de référence	
							72
31C.325.95	163	304	24,0			H112	

COPIA CONFORME ALL'ORIGINALE C.S.C. S.p.A. SCHIO (VI)

Hautmont, le 03 SEP. 1996

Le Chef du Bureau des Essais

FORGES
M. DEMBIERMONT S.A.
S.A. CAPITAL 18.461.500 F — R.C. AVESNES B 572020154
59330 HAUTMONT (NORD) B.P. 89
TELEFAX 03.27.69.73.85 TÉL. : 03.27.69.73.81 (Service contrôle)
03.27.69.73.73 (Standard)

N° Classification / *Classification Nr* : 4-1

Modèle / *Exibit* : 18 C Rev 04

Rapport Certifié d'Essais de Matériaux N°
CERTIFIED MATERIAL TEST REPORT N° 69.293/2 Rév. 1

CLIENT / *CUSTOMER* : C.S.C. SPA SCHIO

Références Commandes Client : 2139/96.02
FAX DU 12/06/96 CLIENT C.S.C

Customer order References

Poste / *Item*	Nombre au poste / *Qtty*	DÉSIGNATION DES PIÈCES / *PARTS DESCRIPTION*	Pièces couvertes par ce rapport / *Parts concerned by report* — Ajout. / *Add.*	Nombre / *Qtty*	N° essais / *Test Nr*	*Pièces déjà livrées* / *Parts delivered*	Total
2	1	COURONNE/ANELLO DE 3220 DI 3090 EP 310 SVT CROQUIS REP B (3EX)		1			1

COPIA CONFORME ALL'ORIGINALE
C.S.C. S.p.A.
SCHIO (VI)

Qualité / *QUALITY*
AL MG 4,5 MNO,7 (5083) SVT NFA 50-451 OCT 86
ETAT NATUREL-R>= 275 MPA-E0,2 >= 125 MPA
A% >= 10 - SENS LONG
CARACTERISTIQUES A TITRE INDICATIF

N° Coulée / *Heat Number* : 3271

Annexes jointes / *Attached appendices*

		Page			Page
I — Analyse - Essais mécaniques	*Analysis - Méc. tests*	2	V — Magnétique	*Magnetic Particle*	
II — Traitement thermique	*Heat treatment*		VI — Examen macrographique	*Macrographic exam.*	
III — Ultra Sons	*Ultrasonic*		VII — Examen micrographique	*Micrographic exam.*	
IV — Ressuage	*Liquide penetrant*		VIII — Dureté	*Hardness*	2

Pièces jointes / *Enclosures*

	Page
Certificat visuel et dimensionnel IX — Visual and dimensionnal P.V.	

LE CONTENU DE CE RAPPORT EST CERTIFIÉ ÊTRE VÉRITABLE ET PRÉCIS POUR LA COULÉE IDENTIFIÉE DANS CE RAPPORT. TOUS LES RÉSULTATS DES ESSAIS ET OPÉRATIONS EFFECTUÉS PAR DEMBIERMONT *ET SES SOUS-TRAITANTS SONT CONFORMES AUX EXIGENCES DE LA SPECIFICATION DU MATÉRIEL IDENTIFIÉE DANS CE RAPPORT ET EXIGENCES ADDITIONNELLES DE LA COMMANDE CLIENT IDENTIFIÉE PLUS HAUT.*

THE CONTENT OF THIS REPORT IS CERTIFIED TO BE TRUE AND CORRECT FOR THE HEAT IDENTIFIED IN THIS REPORT. ALL TESTS RESULTS AND OPERATIONS PERFORMED BY DEMBIERMONT *AND THEIR SUB-CONTRACTORS COMPLY WITH THE REQUIREMENTS OF THE MATERIAL SPECIFICATION IDENTIFIED IN THIS REPORT AND ADDITIONAL REQUIREMENTS OF THE ABOVE REFERENCED CUSTOMER PURCHASE ORDER.*

L'Inspecteur des essais / The test Inspector

Le Chef du Bureau des essais / The testing department Manager

FMD
327-2 -B

HAUTMONT LE: 04 SEP. 1996
15 JAN. 1997

FORGES MAURICE DEMBIERMONT S.A.

CERTIFICAT D'ANALYSE - ESSAIS MÉCANIQUES - Annexe 1 -

Modèle 18 D.2 Rév. 02

CLIENT : C.S.C. SPA

CERTIFICAT N° : 69293/2 Rev. 1

Nuance : AL MG 4,5 MN 0,7

IMPRIMERIE LÉAUD - Hautmont

Origine du Métal	Numéro de Coulée	ANALYSE										
		Cu	Si	Mn	Mg	Fe	Ni	Cr		Zn	Ti	Zr
Alcan	3271	0,030	0,140	0,760	4,660	0,360		0,120		0,030	0,012	

RÉSULTATS D'ESSAIS MÉCANIQUES DE COULÉE / OF CAST							DURETÉ BRINELL sur Pièce
N° de Coulée	0,2 % E MPA	R MPA	A %	Σ %	K	TT	
							94
3271	161	327	22,1				

COPIA CONFORME ALL'ORIGINALE
C.S.C. S.p.A.
SCHIO (VI)

Hautmont, le 04 SEP. 1996
Le Chef du Bureau des Essais

FMD B

FORGES
M. DEMBIERMONT S.A.
S.A. CAPITAL 18.461.500 F — R.C. AVESNES B 572020154
59330 HAUTMONT (NORD) B.P. 89
TELEFAX 03.27.69.73.85 TÉL. : 03.27.69.73.81 (Service contrôle)
03.27.69.73.73 (Standard)

N° Classification / *Classification Nr* :	4-1
Modèle / *Exibit* :	18 C Rev 04
Page : 1	/2

Rapport Certifié d'Essais de Matériaux N°
CERTIFIED MATERIAL TEST REPORT N° 69.293/3 Rev. 1

CLIENT / *CUSTOMER* : C.S.C. SPA SCHIO

Références Commandes Client / *Customer order References* : 2139/96.02
FAX DU 12/06/96 CLIENT C.S.C

Poste / *Item*	Nombre au poste / *Qtty*	DÉSIGNATION DES PIÈCES / *PARTS DESCRIPTION*	Pièces couvertes par ce rapport / *Parts concerned by report* — Ajout. / *Add.*	Nombre / *Qtty*	N° essais / *Test Nr*	*Pièces déjà livrées* / *Parts delivered*	Total
3	1	COURONNE/ANELLO DE 3220 DI 3005 EP 310 SVT CROQUIS REP C (3EX)		1			1

COPIA CONFORME ALL'ORIGINALE
C.S.C. S.p.A.
SCHIO (VI)

Qualité / *QUALITY* AL MG 4,5 MN0,7 (5083) SVT NFA 50-451 OCT 86
ETAT NATUREL-R>= 275 MPA-E0,2 >= 125 MPA
A% >= 10 - SENS LONG
CARACTERISTIQUES A TITRE INDICATIF

N° Coulée / *Heat Number* : 3271

Annexes jointes / *Attached appendices*

	Page		Page
I — Analyse - Essais mécaniques *Analysis - Méc. tests*	2	V — Magnétique *Magnetic Particle*	
II — Traitement thermique *Heat treatment*		VI — Examen macrographique *Macrographic exam.*	
III — Ultra Sons *Ultrasonic*		VII — Examen micrographique *Micrographic exam.*	
IV — Ressuage *Liquide penetrant*		VIII — Dureté *Hardness*	2

Pièces jointes / *Enclosures*

	Page
Certificat visuel et dimensionnel IX — Visual and dimensionnal P.V.	

LE CONTENU DE CE RAPPORT EST CERTIFIÉ ÊTRE VÉRITABLE ET PRÉCIS POUR LA COULÉE IDENTIFIÉE DANS CE RAPPORT. TOUS LES RÉSULTATS DES ESSAIS ET OPÉRATIONS EFFECTUÉS PAR DEMBIERMONT *ET SES SOUS-TRAITANTS SONT CONFORMES AUX EXIGENCES DE LA SPECIFICATION DU MATÉRIEL IDENTIFIÉE DANS CE RAPPORT ET EXIGENCES ADDITIONNELLES DE LA COMMANDE CLIENT IDENTIFIÉE PLUS HAUT.*

THE CONTENT OF THIS REPORT IS CERTIFIED TO BE TRUE AND CORRECT FOR THE HEAT IDENTIFIED IN THIS REPORT. ALL TESTS RESULTS AND OPERATIONS PERFORMED BY DEMBIERMONT *AND THEIR SUB-CONTRACTORS COMPLY WITH THE REQUIREMENTS OF THE MATERIAL SPECIFICATION IDENTIFIED IN THIS REPORT AND ADDITIONAL REQUIREMENTS OF THE ABOVE REFERENCED CUSTOMER PURCHASE ORDER.*

L'Inspecteur des essais
The test Inspector

Le Chef du Bureau des essais
The testing department Manager

HAUTMONT LE: 04 SEP. 199
15 JAN 1997

FORGES MAURICE DEMBIERMONT S.A.

N° Classification 4-1

Modèle 18 D.2 Rév. 02

CERTIFICAT D'ANALYSE - ESSAIS MÉCANIQUES - Annexe 1 -

CLIENT : C. S. C SPA

CERTIFICAT N° : 69293/3. Rev.1

Nuance : AL MG 4,5 MN 0,7

IMPRIMERIE LEAUD - Hautmont

Origine du Métal	Numéro de Coulée	ANALYSE										
		Cu	Si	Mn	Mg	Fe	Ni	Cr		Zn	Ti	Zr
Alcan	3271	0,030	0,140	0,760	4,660	0,360		0,120		0,030	0,012	

RÉSULTATS D'ESSAIS MÉCANIQUES DE COULÉE OF CAST							DURETÉ BRINELL sur Pièce
N° de Coulée	0,2 % E MPA	R MPA	A %	Σ %	K	TT	
							93.
3271	161	327	22,1				

COPIA CONFORME AL L'ORIGINALE
C.S.C. S.p.A.
SCH(O/(XI)

Hautmont, le 04 SEP. 1996
Le Chef du Bureau des Essais

B

Tau Metalli srl
ALLUMINIO - BRONZO - OTTONE - RAME
PNEUMATIC CYLINDER TUBES

25045 CASTEGNATO (Brescia)
Via Padana Superiore
Zona lott. Barco Km. 226+363
Tel. 030/2140421 r.a. - Fax 030/2140327
Capitale Sociale L. 577.000.000 INT. VERSATO
Codice Fiscale e Partita IVA 01270460171
C.C.I.A.A. Brescia 255146
Meccanografico BS001417

Spett.le Ditta

C.S.C. S.p.A.

SCHIO (VI)

Castegnato 20 Agosto 1996

CERTIFICATO DI CONFORMITA'

A seguito Vostra richiesta e in rifermento alla nostra fattura accompagnatoriA N. 8498 del 1/8/96:

SI CERTIFICA CHE

Kg. 141,00 di Tubo alluminio diam. 30x20
sono in lega 6060 uni 9006.

Certi di trovarVi con noi d'accordo, cogliamo l'occasione per porgerVi distinti saluti.

COPIA CONFORME ALL'ORIGINALE
C.S.C. S.p.A.
SCHIO (VI)

TAU METALLI S.r.l.
Via Padana Superiore, 79
25045 CASTEGNATO (BS)

Tau Metalli SRL
ALLUMINIO - BRONZO - OTTONE - RAME
PNEUMATIC CYLINDER TUBES

25045 CASTEGNATO (Brescia)
Via Padana Superiore
Zona Ind. Barco Km. 223+363
Tel. 030/2140421 r.a. - Fax 030/2140327
Capitale Sociale L. 577.000.000 INT. VERSATO
Codice Fiscale e Partita IVA 01370440171
C.C.I.A.A. Brescia 255146
Meccanografico BS021417

Spettabile Ditta
C.S.S. S.p.A.

SCHIO (VI)

Castegnato 15 ottobre 1996

CERTIFICATO DI CONFORMITA'

A seguito Vostra richiesta ed in riferimento alla nostra fattura accompagnatoria n. 10753 del 15/10/96 :

SI CERTIFICA CHE

kg. 11,50 di tubo rettangolo alluminio mm. 50x40x4

sono in lega ANTICORODAL 6060 UNI 3569.

Certi di trovarVi con noi d'accordo, ci è gradito porgerVi i nostri migliori saluti.

TAU METALLI srl

TAU METALLI S.r.l.
Via Padana Superiore, 79
25045 CASTEGNATO (BS)

C.C.S.C. S.p.A.
ALL'ORIGINALE
SCHIO (VI)

CERTIFICATO DI COLLAUDO
N° A27734

TAU METALLI S.r.l.
Via Padana Superiore, 79
25045 CASTEGNATO (BS)
Tel. 030 - 2140321 r.a.
Fax 030 - 2140327
P. IVA 01270480171

Spett. Le
CSC SpA

	Lega / Alloy	Pr.Mecc/Mec.Pr.	STP: / Tempor:	Desc. Prod.
	6082	F30	T6	BAR ES STD LD

Profilo / Profile	Spess.: / Thickn.:	Altezza: / Height:	Base: / Base:	L.Verg.: / L.Rod:	Raggio: / Radius:
61920	70.00 mm		70.0 mm	6000.0 mm	

CHEMICAL COMPOSITION / COMPOSIZIONE CHIMICA

Colata N°: / Cast n°:

Rotolo N°: / Coil n°:

Si =	0.859	Fe =	0.376	Cu =	0.038	Mn =	0.518	Mg =	0.756
Cr =	0.017	Ni =	0.003	Zn =	0.015	Ga =	0.018	V =	0.006
Ti =	0.015	Bi =	0.001	Pb =	0.006	Sn =	0.001	B =	0.003
Be =	0	Ca =	0.007	Li =	0	Na =	0	Sr =	0
Zr =	0.001	P =	0.005						

MECHANICAL PROPERTIES / CARATTERISTICHE MECCANICHE

Limite di Snerv.: Yield Stress: Rp 0.2 (MPa)	Carico di Rot.: Ten.Stress: Rm (MPa)	Allungamento: Elongation: A50(%)	Anisotropia: Earing: (%)
0	0	0	0

Resistività: / Resistivity: 0 $\Omega \cdot \frac{mm^2}{m}$

Durezza: / Hardness: HB = 107.0

Piega Bend:

Erichsen Dome (mm): 0

Grain Size (µm): 0

Macro:

Planarità: 0

C.S.C. S.p.A.
SCHIO (VI)
COPIA CONFORME ALL'ORIGINALE

TAU METALLI S.r.l.
Via Padana Superiore, 79
25045 CASTEGNATO (BS)

INSPECTION CERTIFICATE / TEST REPORT / (DIN 50049/3.1B/EN 10204/3.1B)

TAU METALLI S.r.l.
Via Padana Superiore 79
25045 CASTEGNATO (BS)
Tel. 030 - 2140321 r.a.
Fax 030 - 2140327
P.IVA 01270400171

ALLOY/TEMPER: 6082-T651

ITEM: 01 LOT: 540837 PRODUCT: PLATE

QUANTITY: 3 DIMENSIONS: 70,000 x 1550,00 x 3050,00 mm

RESULTS:

Mechanical properties:

Pl. No.	Spec. No.	Y.S. N/mm²	U.T.S. N/mm²	El. %	Reduction of area %	Impact strength (DVM)	Impact strength J/cm²
Min. LT:		240	295	6,0			
Max. LT:							
	1	300	352	11,4			
	2	309	3 8	9,5			
	3	313	370	8,5			

Chemical composition: in % , remainder Al

Cast No.: 3-96-4001

Si	Fe	Cu	Mn	Mg	Cr	Zn	Ti	B
1,134	0,300	0,068	0,479	0,708	0,008	0,070	0,0185	0,0014
Zr	Pb	Ni	Sn	Be	Na	Li	V	
0,0012	0,0003	0,0044	0,0011	0,0002	0,0000	0,0000	0,0071	
Al	Tl	Ti+Zr	Cu/Mg					
		0,020						

TAU METALLI S.r.l.
Via Padana Superiore 79
25045 CASTEGNATO (BS)

30/10/96

NS.RIF. / NOTRE REF. / OUR REF..... NS.BOLLA DI CONSEGNA NR.1517 DEL 30.10.96
CLIENTE / CLIENT / CUSTOMERREF..... TRADARC SRL
VS.RIF. / VOTRE REF. / YOUR REF..... ORD.1/2 FAX DEL 30.10.96
MATERIALE / MATERIEL / MATERIAL.....
CONFORME A / ACCORDING TO.....

ANALISI CHIMICA - ANALYSE CHIMIQUE - CHEMICAL ANALYSIS

	Lega Nuance Alloy		Colata Coulée Batch	Mg	Zn	Cu	Si	Fe	Mn	Cr	Ti	Be	Zr
AG5	5356	14443	ALCOA	4.9	.00	.00	.06	.10	.16	.12	.10	0	
AG5	5356	02544	ALCOA	4.9	0.00	0.00	0.06	0.09	0.16	0.11	0.10	0.0001	

filo da saldare

Con 0120

circuito raff-

COPIA ALL'OBLIGAZIONE
S.I.C. S.p.A.
SCHIO (VI)

PECHINEY RHENALU

CERTIFICAT DE CONTRÔLE

MILL-TEST CERTIFICATE ET CONFORMITE
ABNAHMEPRÜFZEUGNIS DIN 50049-3 1B

USINE DE MONTREU
49460 MONTREUIL JUIGN
Tél. : 41.88.90.19 - Télex : 7[illegible]6
Télécopie : 4[illegible]43.

050959 17 MAI 1994

COMMANDE CLIENT - Customer Order - Kundenbestellung	DESTINATAIRE - Consignee - Empfanger	COMMANDE PECHINEY RHENALU
CDE 431719N ALMET LYON	ALMET STOCK CENTRAL 7 RUE DE FOS SUR MER BP 7133 PORTEDOUARD HERRIOT 69353 LYON CEDEX 07	050092/03 AVIS D'EXPÉDITION - Dispatch Note - Liefers

ALLIAGE - Alloy - Werkstoff	ÉTAT Temper Zustand	NORME - Standard - Norm	PRODUIT - Product - Produkt
5083	F -	NFA50411 ED.89 DIN.1725 ASTM B221-92A	BARRE RONDE 50X3000 032022 DIN.1799 DIN.1747

COMPOSITION CHIMIQUE (% en Masse) - Chemical Composition - Chemische Zusammensetzung

N° COULEES - N° Castings Schmelze - Nr	Si	Fe	Cu	Mn	Mg	Cr	Ni	Zn	Ti	Zr	Pb	Bi	NA	S
											PPM		PPM	
K0678	0.15	0.31	0.02	0.56	4.7	0.14	0.00	0.02	0.01	0.00	220		1	0.

DÉSIGNATION DES PRODUITS - Product description - Bezeichnug der Produkte
OBSERVATIONS - DEROGATIONS - Remarks - Derogations - Bemerkungen - Abweichung

RRE RONDE FILEE --- 59 LG--- 1013 KG
LOT 01 COLIS 301 - 302

AUTRES EXAMENS
DIMENSIONS BONNES
ETAT DE SURFACE BON
EXAMEN MACROGRAPHIQUE E

DN15
VM 9157

ESSAIS DE TRACTION - Physical Tests - Zugversuche

N° Lot Sens Prélèvements (1) Batchn. Sample Orientation Los n. Richtung des Probestuckes	R Tensile Strength M.P.A.	R 0.2 Yield Point M.P.A.	A % Elongat. %	N° Lot Sens Prélèvements (1) Batchn. Sample Orientation Los n. Richtung des Probestuckes	R Tensile Strength M.P.A.	R 0.2 Yield Point M.P.A.	A % Elongat. %
LOT 050092/03/01		K0678					
ETAT DE CASSE F							
L	342	204	24,0				
	339	204	23,0				
	339	204	23,0				

CONFORMITÉ

Nous certifions que, sauf exceptions ou dér tions énumérées ci-dessus, la fourniture citée a fabriquée conformément aux spécifications tec ques du marché, commande ou sous-comma du client et que, toutes opérations de contrô essais effectués, elle répond SOUS TOUS ASPECTS aux spécifications particulières, plans ainsi qu'aux normes et règlements e gueur s'y rapportant.

CERTIFIÉES EXACTES LES INDICATIONS CI-DESSUS
I certifie that the above is correct
Obige Angaben als zutreffend bescheinigt 26/04/

3/05/94

M. LERA

(1) L. Sens Long TL. Sens Travers Long TC. Sens Travers Court

DÉPOSITAIRE
SIRET : BL
CLIENT :
COMMANDE : LCS255

QUANTITE : 10
N° lot ou Produit :
N° BL :
LIEU :

OBSERVATIONS DE LA SURVEILLANCE
Remarks of official inpector
Bemerkungen von der Beaufsichtigung

CORA S.p.A. SCHIO
11/12/86

THYSSEN

Oberschlesienstraße 10
D-4150 Krefeld 1
Telefon (0 21 51) 83-0
Telefax (0 21 51) 83-41 08
Telex 85 312-0 te d

16

THYSSEN ACIERS SPECIAUX S.A. / THYSSEN EDELSTAHLWERKE AG

CLIENT	
N° Cde CLIENT	
N° B.L.	
THYSSEN ACIERS SPECIAUX S.A. 13, BLVD. DU GENERAL KOENIG F-44000 NANTES	

Thyssen Edelstahlwerke AG · Postfach 730 · D-4150 Krefeld 1 037

Prüfbescheinigung
Prüfbescheinigung
Inspection document; Document de contrôle

DIN 50 049
DIN EN 10 204

Nr. · No.	Datum · Date	Auftrags-Nr. · Order No. · Commande No.
114047-RO	17.08.92	12-72587

Unsere Abteilung	Telefon · Telegr. · Téléph.	Kunden-Nr. · Customer's Index · Index client
VLRA	02151 832331	998412-00

Ihre Bestellung Nr./vom · Your order No./dated · V/commande No./du
22/40592
05.05.92

Prüfbescheinigung DIN 50 049; DIN EN 10 204
3.1B 3 fach

Gegenstand
Product
Produit

STABE/BARS/BARRES CA
REM. 1.4306 SUPER IM, TYPE 304 L SUPER IM, Z 3 CN 19.11 SUPER IM
GEWALZT, ABGESCHRECKT, GESCHALT / HOT ROLLED, SOLUTION-ANNEALED,
PEELED / LAC, HYPERTREMPEES, ECROUTEES
+ADW 2-01/90; ADW 10-11/87; DIN 17440-7/85
++ASME SA 479 SEC.II PART.A 89 ADD.90; ASTM A 479-91A
+++NFA 35-574-05/90

Pos. Item	Anzahl · Quantity · Nombre	Abmessung · Size · Dimension (mm)	Netto-Gewicht Net Weight Poids Net (kg)	Herstellerzeichen Mark of the manufacturer Signe du producteur	Prüfstempel Inspector's stamp Poinçon de l'expert
01		RD 40,000 3600- + 0,400 4000 - 0,400 +UL	3445,00	TEW	QA

Schmelzen-Nr. Cast No. No. de coulée	Erschmelzungsart · Steelmaking Process · Procédé d'Elaboration: E											
	% C	% SI	% MN	% P	% S	% CR	% NI	% MO	% CU	% N		
270370	0,014	0,55	1,67	0,025	0,024	18,26	10,46	0,13	0,14	0,064		

LIEFERZUSTAND/CONDITION OF DELIVERY/ETAT DE LIVRAISON: 1050 C/L/AIR/L'AIR

Probe-Stand-Nr. Test-Coil-No. No. échantillon	Prob.-Lage Pos. of Test Position	Prob.-Abmessung Test-Dimension Dimension	Pr.-Temp. T.-Temp. Temp. °C	Rp 0,2 % (N/mm²)	Rp 1% -MPa	RM (N/mm²) -MPa	A5 (%)	2" (%)	Z (%)		Pr.-Form Type of Sp. Type	Härte Hardness Dureté HB
2213	L	12,5	23	259	295	585	49.8	54.9	75			142-161
2214	L	12,5	23	253	292	582	50.2	55.7	74			
2215	L	12,5	23	254	290	584	49.8	55.2	74			
2216	L	12,5	23	243	282	576	51.4	56.1	75			
	L	+	23	>180	>215	460-680	>45					
	L	++	23	>170		>485		>30	40			
	L	+++	23	>175		450-650	>45					

DIE LIEFERUNG WURDE
AUF IK-BESTAENDIGKEIT GEPRUEFT (DIN 50914)
US-GEPRUEFT (VORMATERIALPRUEFUNG)
AUF IDENTITAET GEPRUEFT (SPECTRO.)
BESICHTIGT UND AUF MASS KONTROLLIERT
UND FREIGEGEBEN
RESISTANT TO INTERCRYSTALLINE CORROSION (ASTM A 262 PRACITCE E)
ULTRASONIC TESTING HAS BEEN PERFORMED (TEST ON SEMI-PRODUCT)
IDENTITY HAS BEEN CHECKED (SPECTRO.)
VISUAL INSP. + CONTROLL F. DIMENS. ACCURACY
HAVE BEEN PERFORMED
RESISTANT A LA CORROSION INTERCRISTALLINE (NFA 05-159 T1)
MATIERE ACCEPTEE APRES CONTROLE AUX
ULTRA-SONS (CONTROLE DES DEMI-PRODUITS)
TEST D' IDENTIFICATION (SPECTRO.)
CONTROLE VISUEL ET DIMENSIONNEL A ETE
EFFECTUE

DN 5/6 9152 9157

C.G.S.C. S.p.A. SCHIO (VI)
ALL'ORIGINALE
11/10/96

THYSSEN EDELSTAHLWERKE AG · ABNAHME

ROBENS
DER WERKSSACHVERSTAENDIGE
WORKS' INSPECTOR*L'EXPERT

Es wird bestätigt, daß die Lieferung geprüft wurde und den Vereinbarungen bei der Bestellungsannahme entspricht.
We hereby certify that the material described above has been tested and complies with the terms of the order contract.
Nous certifions que la fourniture ci-dessus a été vérifiée et est conforme aux stipulations de l'acception de la commande.