OPERATORLESS ACCESS @ NSRL

TAGMASTER'S **S1501 PASSMAN RFID Setup and Configuration**

DEAN GREEN, Access Controls Engineer

Access Control Group, C-AD

04/25/08

Tag Master, S1501 PassMan System Description

The S1501 PassMan is a 2.45 GHz high-frequency microwave station for reading tags, which automatically sends the identification information to a door central or a controller.

The diagram above shows the S1501 *PassMan* system reader and the interfaces which will be used for the Operatorless access Entry.

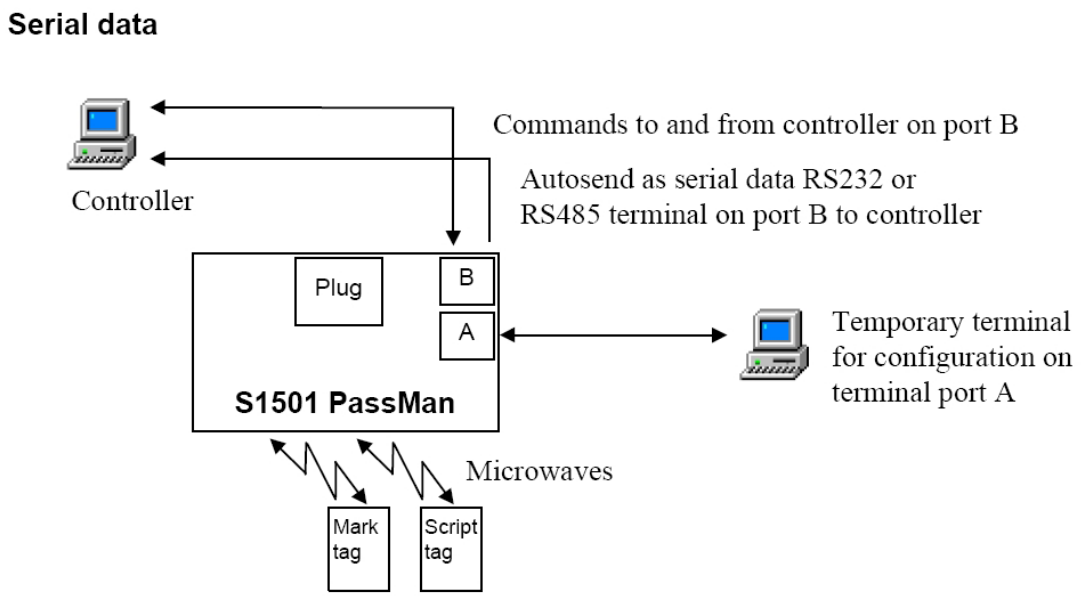

Figure 3. An overview of the typical architecture of the S1501 PassMan reader, integrated with a controller by using serial data on port B.

Mark Tags will be read by the *PassMan* reader, this tag information will be processed and passed to a controller. The controller will be a SLC500 system, this SLC500 controller will then interpret the RS232 serial data received, this serial data will converted to unique Tag information.

Each tag has a unique identifier.

There are two RS232 serial ports on the PassMan reader, ports A and Port B.

Port A will be used to interface with a computer to program and configure the PassMan reader.

Port B will be used to pass serial RS232 data to the SLC500 controller.

Electrical description

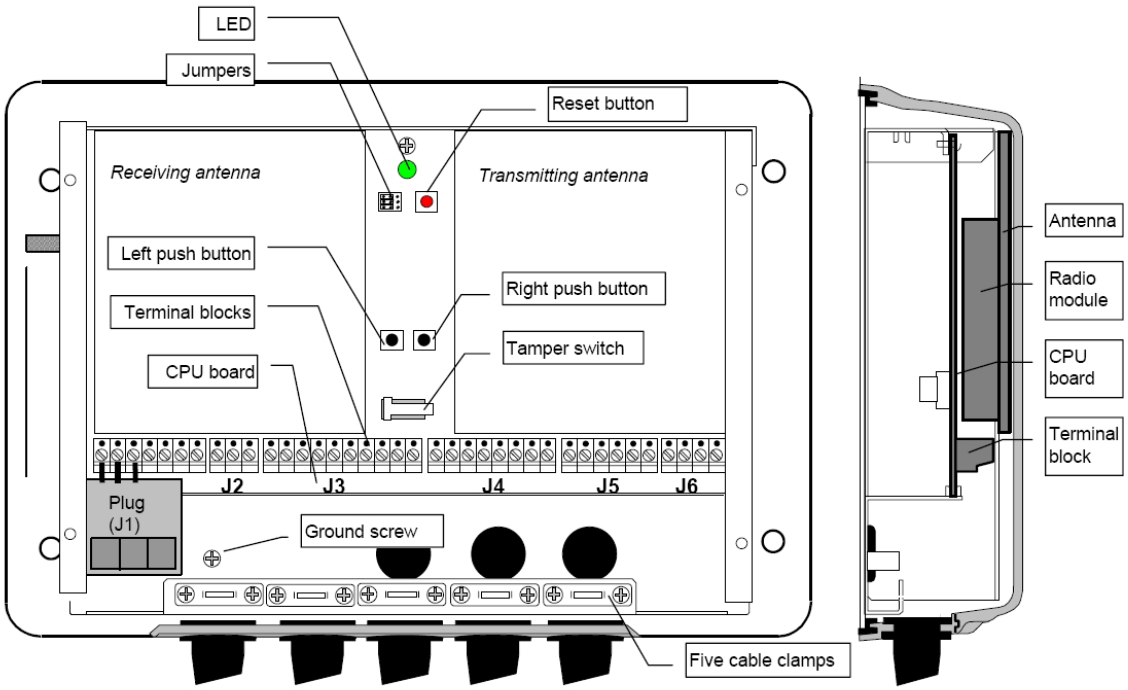

Figure 12. Front and side view of the reader S1501 board, where the plastic front cover has been removed.

Figure 12 shows the Electrical Layout of the Tag Master, S1501 PassMan Reader System.

Following connector sockets are under the front cover of the reader, of which some are useful for your integration:

Terminal block	*Connector type provided with S1501 PassMan*	*Description*
J1	7-pin	For plug connection and front cover detector
J2	3-pin	Port A, RS232 to terminal
J3	10-pin	Port B, serial data RS232 or RS485 to controller
J4	8-pin	Optocoupler outputs and relay
J5	6-pin	Optocoupler inputs
J6	4-pin	Power supply

Table 1

The table above shows the connecting interfaces on the terminal block of the PassMan reader.

The terminal blocks that will be used for the OperatorLess access project are:

J2 a 3-pin serial port connector, designated as Port A, used for RS232 serial data communication with Terminal Computer.

J3 a 10-pin serial port connector, designated as Port B, used for RS232 serial data communication with SLC500 controller.

J6 a 4-pin Power supply connector, designated as SPL1, 12V DC is the desired input voltage. If needed a 12V DC output can also be utilized once SPL1 is connected, this output is designated SPL2.

***Note, a 12V DC external power supply is needed to power the Tag Master PassMan Reader System**

There are two jumpers on the PassMan Reader control board to set the type of serial communication that will actively pass data, the jumper block on which these ports are connected is labeled CN4. These jumpers should be set to both transmit and received RS232 serial data only.

Serial RS232 Port A is used for configuring the unit.

Serial RS232 Port B is to send Tag Information serially to the SLC controller.

5.13 Power supply filter

We recommend that you add a filter to the power supply terminal block J6, in order to ensure compliance with the requirements for conducted emission (ETS 300 683). Especially, this is important if the power cable length exceeds 3 metres.

See the figure below:

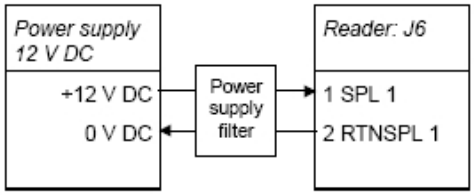

Figure 18. Power supply connection with a power supply filter.

The table below shows how you can set the jumpers:

Jumpers	*Description*
Left	Send and receive as RS232 connected to controller.
Right	Send and receive as RS485 connected to controller.

Table 2

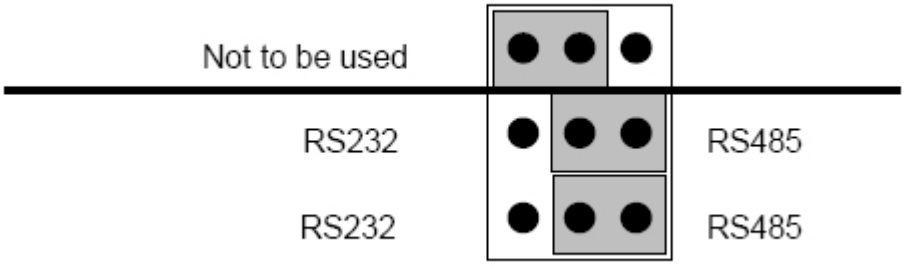

Figure 2

Terminal block J4: Optocoupler outputs and relay

Pin	*Name*	*Description*	
1	OUT SPL1	External source voltage for out1 and out2 from the controller	
2	OUT 1C	Collector	of out1
3	OUT 1E	Emitter	
4	OUT 2C	Collector	of out2
5	OUT 2E	Emitter	
6	R1C	Relay. R1C is normally connected to R1B. When the relay is pulled, R1C is connected to R1M instead.	
7	R1B		
8	R1M		

The two transistor outputs, out1 and out2, are of an optocoupler type, and must therefore be connected to an external source voltage on J4:1.

The relay can only be pulled by the reader.

Table 3 above shows possible output configurations

POSSIBILITIES

It is possible to use the output relay connected to pin 6, 7, 8 on J4 labeled R1C, R1B, and R1M respectively, as an output control function that activate once a tag is read by the PassMan reader.

The S1501 PassMan can also be configured to detected and control untagged objects by making the necessary changes in the *A. system settings menu* then selecting option P. '*untagged object detection functionality.'*

7.1 Connecting the reader to a terminal

The S1501 PassMan reader can be connected to, for example, a laptop with any kind of computer environment, as long as it can handle a RS232 serial interface on port A and a terminal program.

We recommend that you make the configuration via HyperTerminal in Windows 95 or Windows 98.

You may also use other terminal programs. If you do, make sure that you set up the correct communication parameters, as described in the chapter *S1501 PassMan interface description*.

The requirements for the connecting cables and the computer hardware that will be connected to the reader, are specified in the chapter *Integrating S1501 PassMan*.

The figure below shows a connection between the reader and a computer. The D-SUB connector's signal names are defined in the EIA/TIA-232E standard.

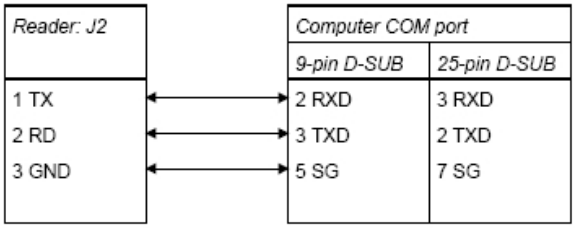

Figure 37. The figure shows how to connect the reader with a computer for configuration on the terminal block J2.

RS232 connection on port B to controller

If the reader shall autosend serial data as RS232 on port B, then do as follows:

1. Make the connections on terminal block J3 according to the figure below.
2. Set the jumpers to the left for RS232 according to the description in chapter *S1501 PassMan interface description*.
3. Apply power to the reader according to figure 26.
4. Configure the reader. Refer to the description in chapter *How to configure the firmware*.

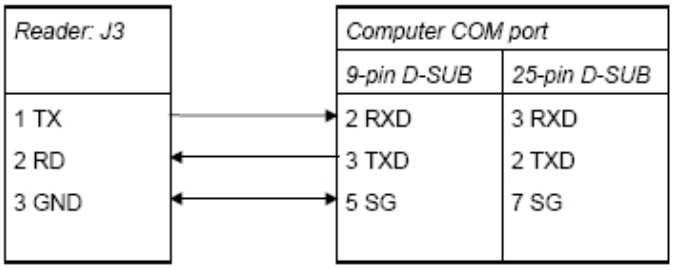

Figure 25. The figure shows a reader connection for RS232 on port B to the controller.

Note that you also should add a power supply connection as shown in the figure below.

Regarding power supply filter, refer to the description in the chapter *Integrating S1501 PassMan*. For electrical specification values, see the chapter *Technical data*.

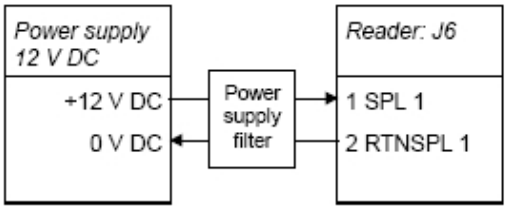

Figure 26. Power supply connection. Note that we have added a power supply filter.

Installation of the S1501 PassMan

The reader should be installed on a pole or wall, approximately 2 meters or 6-7 feet above the ground, in order to get the most efficient reading range.

The tag may be covered in a margin of 20 mm, measured from its lower tag edge.

The tag can only be read from its front side.

To get maximum reading range, the front side of the tag should be parallel with the front side.

3.4 Reading range

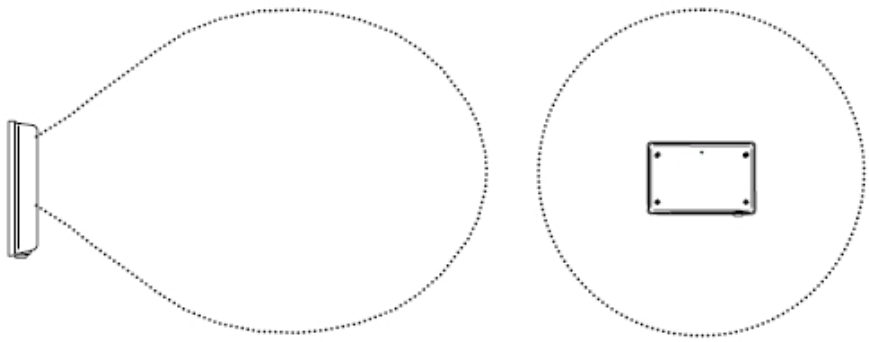

Figure 4. The figure shows the reading lobe of the reader. The illustration to the left shows the direction of the reading range from the side, and to the right its circular form from front.

Microwaves penetrates wood, dirt, paint, plastic, and the most of non-metallic materials.

The antenna system is circular polarised and radiates through the front cover with a lobe according to the figure above.

Take the reading lobe of the reader in account as illustrated in the figure above, when you install and verify the installation of the reader.

The microwave transmitter and receiver of the reader can be set to four different reading range settings (optimal up to 6 metres or 20 feet). However, the reading range may also depend on the used tag data speed, tag orientation and the surroundings in which the reader operates.
Normally, full reading range should be used to achieve the longest possible reading range distance.

See reading range and tag data speed configuration in the system settings menu.

The MarkTag and ScriptTag differ in reading range capacity. Refer to the table in the chapter *Technical data* for reading range values.

6.5.1 Handling the tag

See the two figures below. The antenna is housed inside the plastic case of the tag. In order to get optimal range in tag reading, it is important that you do not cover the front area of the tag where the antenna is housed. The tag may be covered in a margin of 20 millimetres, measured from the lower tag edge.

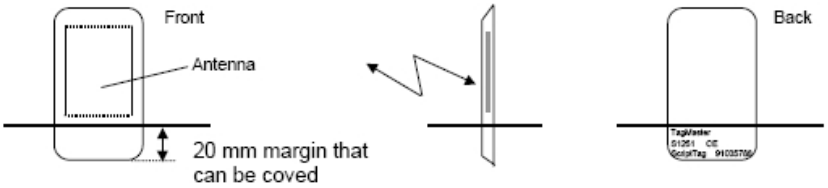

Figure 33. Front, side and back view of the tag. Note that the tag only can be read from front.

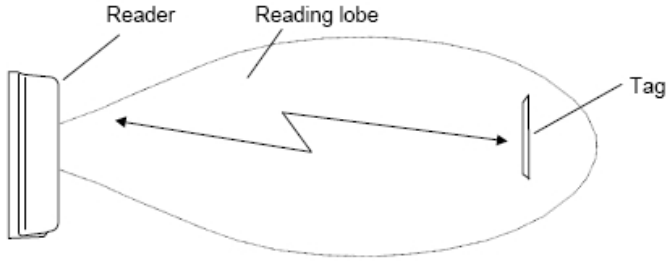

Figure 34. Always place the tag as parallel as possible towards the front of the reader.

The tag can only be read from its front side (the back carries a type label). The front side of the tag shall be directed towards the front side of the reader as parallel as possible, as shown in the figures of typical installations in this chapter.

Caution! Never bend the tag. If you do, it could damage the tag.

Vehicle single-lane identification at a barrier

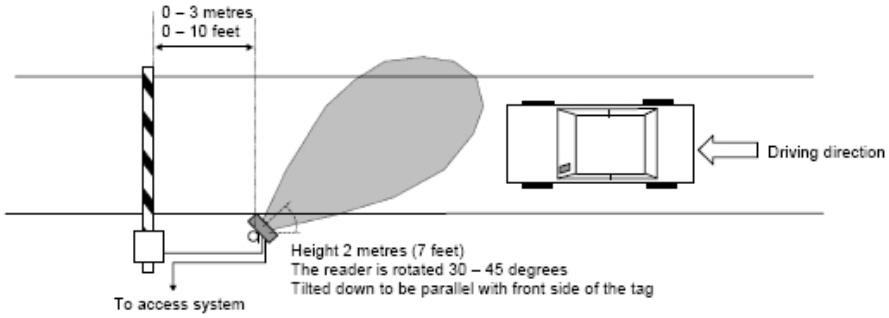

Figure 20. Avoid to place the reader more than 3 metres (10 feet) from the barrier.

The reader should be installed approximately 0 – 3 metres or 0 – 10 feet from the barrier, so that the first vehicle in lane will be read at an early stage as possible. This in order to get the most convinient traffic flow.

Note that if the distance between the reader and the barrier is more than 3 metres or 10 feet, it could lead to that the next vehicle in lane will be read, and that the barrier goes down in front of the first vehicle in lane.

Vehicle single-lane identification at a gate

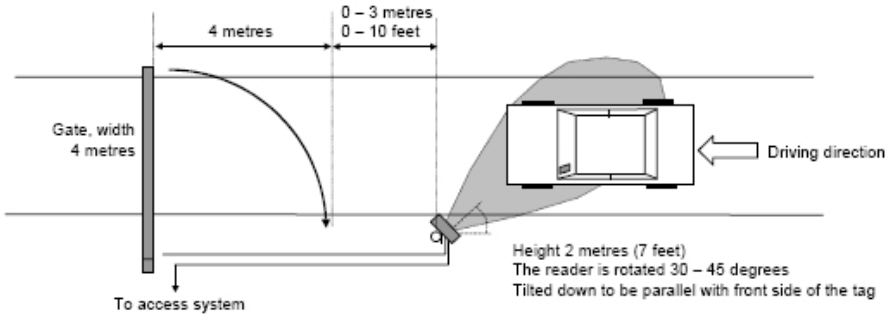

Figure 21. For the vehicle to pass a wide gate, then consider the distance between the reader and the gate in order to achieve a convinient traffic flow.

How to configure the firmware.

After that you have been verifying your installation according to the instruction below, you may have to adjust your configuration, and then repeat the verifying procedure once again.

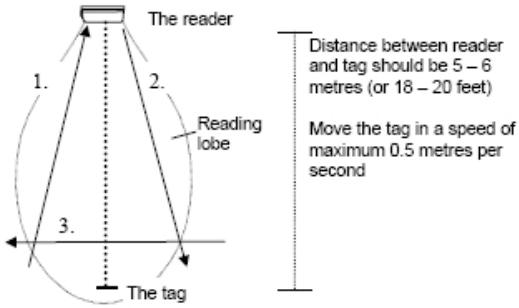

Figure 36. How to verify tag reading range in front of the reader. The instructions below correspond to the picture.

1. Hold the tag 5 – 6 metres to the left side away from the front of the reader. Move the tag slowly towards the reader, in a speed of max 0.5 metres per second. Watch the flashing LED on the reader all the time, and note at which distance it turns off.
2. Hold the tag just in front of the reader. Move the tag slowly backwards to the right side away from the reader, in a speed of max 0.5 metres per second. Watch the flashing LED on the reader all the time, and note at which distance it turns off.
3. Hold the tag 5 – 6 metres away from the front of the reader. Move the tag slowly from the right to the left side, in a speed of max 0.5 metres per second. Watch the flashing LED on the reader all the time, and note at which distance it turns off.
4. Verify also tag reading height, by moving the tag from the height where you intended, downwards to the floor.
5. If the tag reading works like it should, set the operation mode back to on. Then you can check out if the door central, or door lock, etc works. About how to adjust the configuration of reading range and tag data speed, refer to the parameter description in the chapter *How to configure the firmware*.

Indoors access system

The reader shall be mounted on the ceiling or a wall, where it might be visible or not.

In order to avoid interference between several readers close to each other, they should be configured to use different RF channels.

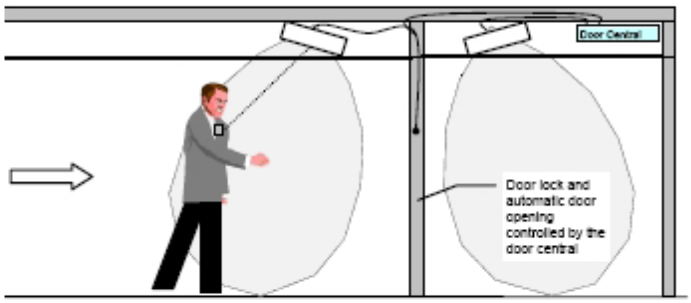

Figure 23. The figure shows a non-visible reader, mounted on the ceiling directed towards any approaching person who is carrying a tag.

Tag Timeout

Single timeout

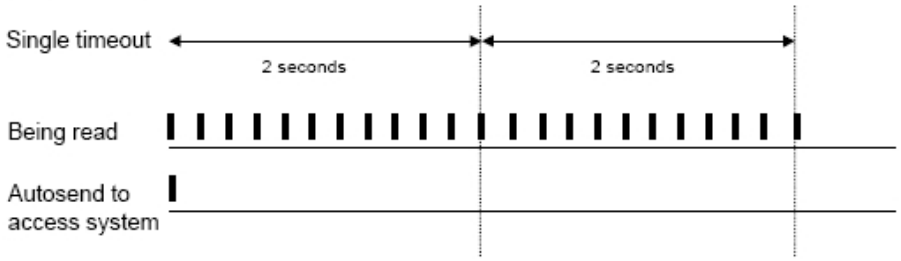

Figure 5. Single tag read timeout type for 2 seconds.

See the figure above. For example, you have chosen tag read timeout type as single for 2 seconds. Here, the tag still remains in the reading lobe. Therefore the tag information has been automatically sent to the controller and/or access system only once.

The tag must be absent from the reading lobe in 2 seconds, and then enter the reading lobe again, if the tag information automatically will be sent once again.

Possible system configuration for PassMan1.03 operator less access

```
A. Syste


Your choice (A or B):: facility code field

PassMan 1.03 (a)2: (Gree
Possible values for Menus:
A. Syste
A. System settings menuTag-ID as Wiegand: firs
B. Tag settings menu3)valid whe

Your choice (A or B):
```

```
PassMan 1.03 (a)  System settings menu:
 A. Operation mode (On)
 B. Function on tag read (YellowLED + Relay)
 C. Tag read timeout type (Single)
 D. Tag read timeout, sec (1)
 E. RF channel (40)
 F. Reading range (4)
 G. Reading tag data speed (High)
 H. Port B ConfiTalk address valid when OP=OFF (40)
 I. Port B interface type (RS232)
 J. Port B bitrate (9600)
 K. Port B stop bits (1)
 L. Port B parity (No)
 M. Port B all messages terminator (None)
 N. Port B tag message frame (Stx...cs1 cs2 etx)
 O. Tag present signal connected to (No output)
 P. Untagged object detection functionality (Off)
 Q. Untagged object detection sensitivity (1)
 R. Untagged object detection output (To relay)
 S. Function on input1: (RedLED)
 T. Function on input2: (GreenLED)
 U. Input3: Loop trigger duration. No trigger = 0 (0)

Your choice (A-U): 
```

passMan - HyperTerminal

File Edit View Call Transfer Help

```
 L. Tag-ID as Mag-stripe: leading zeroes (25)c
 O. Tag-ID as Wiegand: tag number, used number of bits (24)ag-stripe: trailing z
 P. Tag-ID as Wiegand: facility code field lenght (0)ield lenght (24)ct detectio
 U. Tag-ID as Wiegand: last parity bit range (14) Tag settings menuB and WI/MC/O

Your choi

Your choice (A-U):nd: first parity b

PassMan 1.03 (a) settings menu:

Possible values for Menus: H
 U. Tag-ID as Wiegand:
A. System settings menu4)ion: (As 8-bit ASCII
```

```
PassMan 1.03 (a)  System settings menu:
 A. Operation mode (On)
 B. Function on tag read (YellowLED + Relay)
 C. Tag read timeout type (Single)
 D. Tag read timeout, sec (1)
 E. RF channel (40)
 F. Reading range (4)
 G. Reading tag data speed (High)
 H. Port B ConfiTalk address valid when OP=OFF (40)
 I. Port B interface type (RS232)
 J. Port B bitrate (9600)
 K. Port B stop bits (1)
 L. Port B parity (No)
 M. Port B all messages terminator (None)
 N. Port B tag message frame (None)
 O. Tag present signal connected to (No output)
 P. Untagged object detection functionality (Off)
 Q. Untagged object detection sensitivity (1)
 R. Untagged object detection output (To relay)
 S. Function on input1: (RedLED)
 T. Function on input2: (GreenLED)
 U. Input3: Loop trigger duration. No trigger = 0 (0)

Your choice (A-U): 
```

Connected 0:38:13 | ANSI | 9600 8-N-1 | SCROLL | CAPS | NUM | Capture | Print echo

```
 N. Port B tag message frame (Stx...cs1 cs2 etx) menu:D as Wiegand: tag number,


 O. Tag present signal connected to (No output)sec (1)
A. System settin
Possible v
 P. Untagged object detection functionality (Off) zeroity code field lenght (0)e
 F. R
 Q. Untagged object detection sensitivity (1)ing tag data speed (High)
A. System settings menusages terminator (None)
B. Tag settings menuB and WI/MC/OL data

Your choice (A or B):ag message frame (Non
```

```
PassMan 1.03 (a)  Tag settings menu:
 A. ScriptTag data field serial representation: (As 8-bit ASCII bytes)
 B. ScriptTag data field use: (All data to port B)
 C. Tag-ID and facility code use: (As serial data to port B)
 D. Tag-ID as serial data: tag number field lenght (8)
 E. Tag-ID as serial data: tag number, used number of digits (5)
 F. Tag-ID as serial data: facility code field lenght (3)
 G. Tag-ID as serial data: facility code, value (103)
 H. Tag-ID as Mag-stripe: tag number field lenght (9)
 I. Tag-ID as Mag-stripe: tag number, used number of digits (9)
 J. Tag-ID as Mag-stripe: facility code field lenght (6)
 K. Tag-ID as Mag-stripe: facility code, value (0)
 L. Tag-ID as Mag-stripe: leading zeroes (25)
 M. Tag-ID as Mag-stripe: trailing zeroes (25)
 N. Tag-ID as Wiegand: tag number field lenght (24)
 O. Tag-ID as Wiegand: tag number, used number of bits (24)
 P. Tag-ID as Wiegand: facility code field lenght (0)
 Q. Tag-ID as Wiegand: facility code, value (0)
 R. Tag-ID as Wiegand: first parity bit type (Even)
 S. Tag-ID as Wiegand: last parity bit type (Odd)
 T. Tag-ID as Wiegand: first parity bit range (13)
 U. Tag-ID as Wiegand: last parity bit range (14)

Your choice (A-U): 
```

Tag Configuration

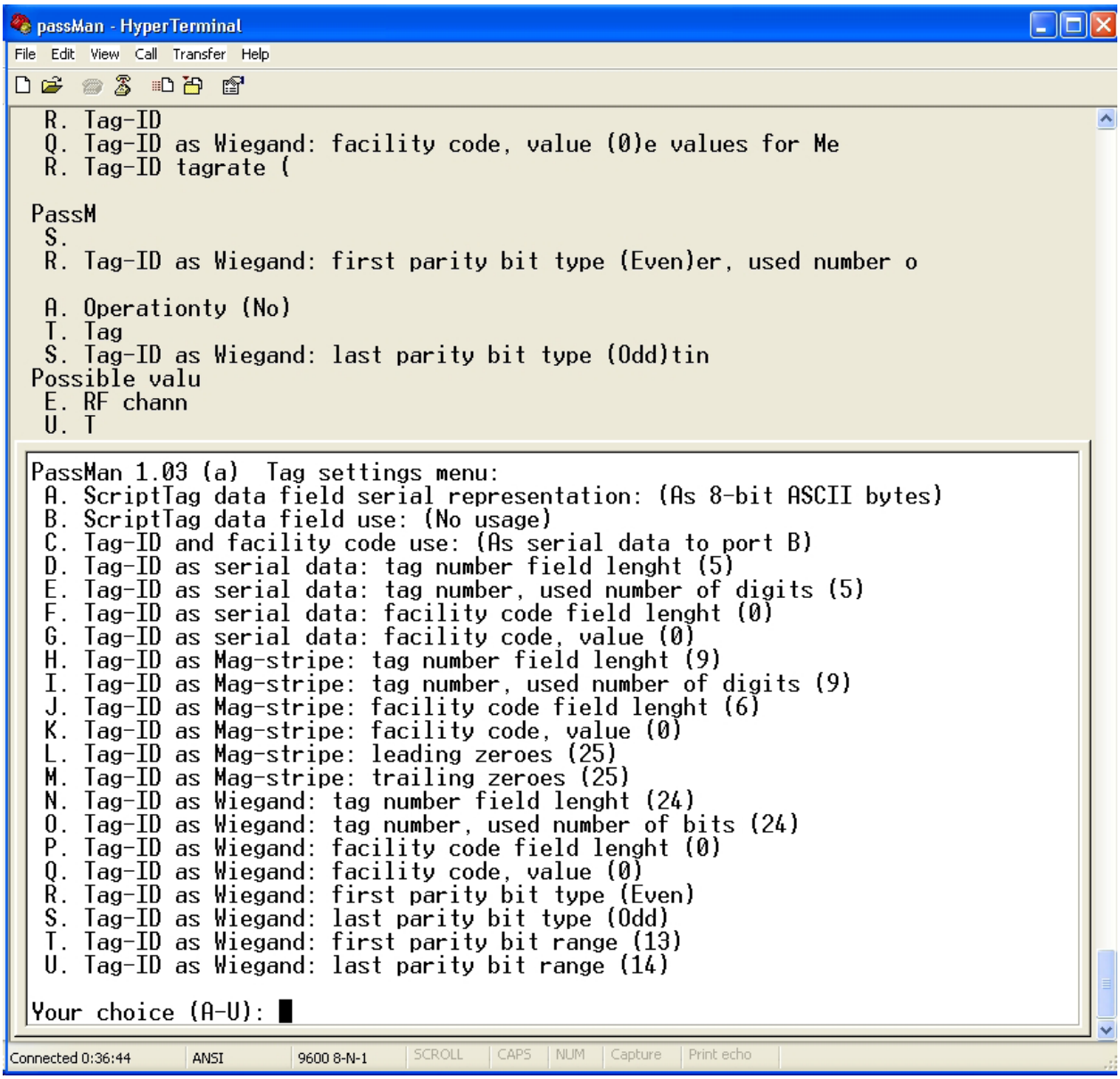

The output from Port B RS232 to Controller

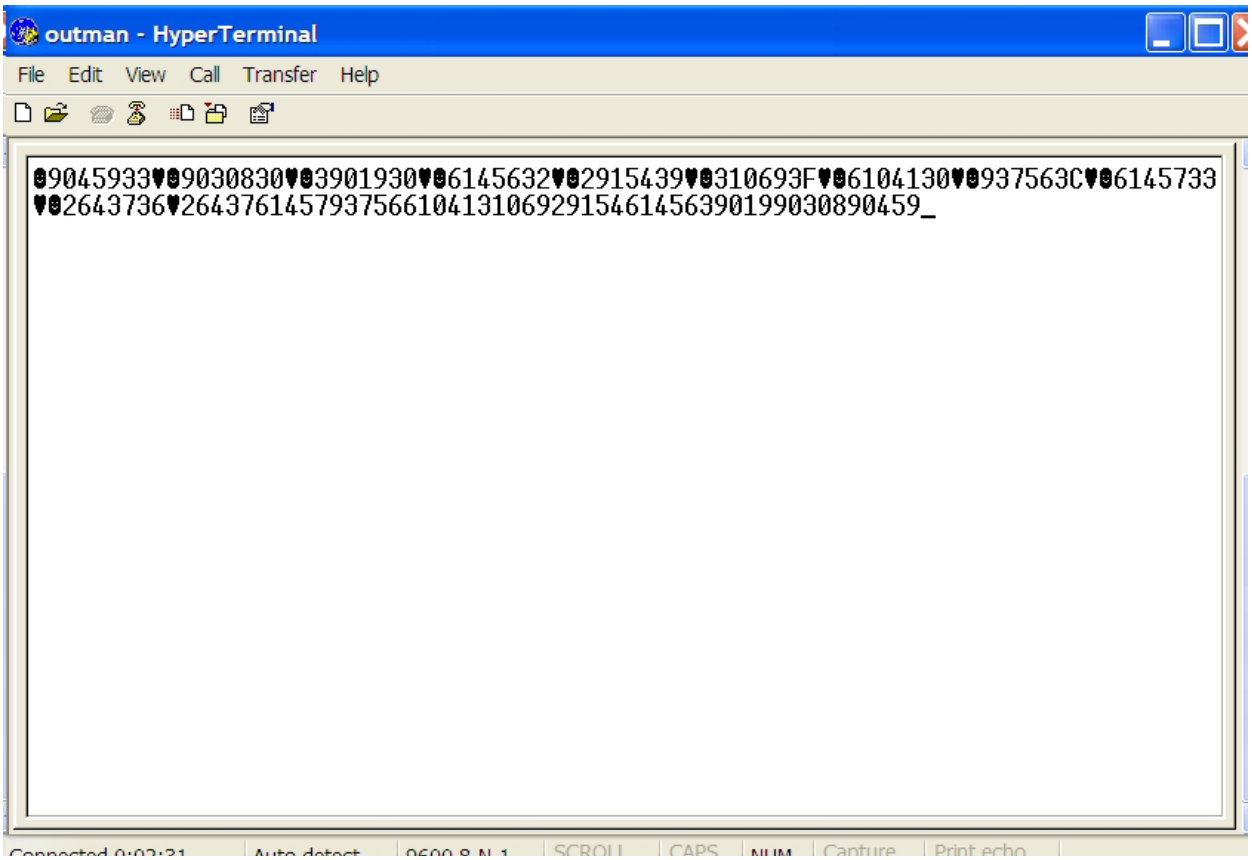

Collider - Accelerator Department
BROOKHAVEN NATIONAL LABORATORY
Brookhaven Science Associates
Upton, New York 11973

Specification No. CAD-xxxx Rev A

April 10, 2008

NASA Space Radiation Laboratory

Optical Turnstile Access System

Control Sequence Specification

(QA Classification: A1)

Prepared by: _____
R. Michnoff

Approvals: _____
A. Rusek, NSRL

_____
A. Etkin, Rad. Safety

_____
D. Beavis, Rad. Safety

_____
Others

TABLE OF CONTENTS

1. OVERVIEW 3

1.1 Abbreviations 3

2. METHODOLOGY 4

2.1 State Table 4

2.2 State Transition Diagram 4

2.3 State Description 4

2.4 System Block Diagram 4

3. DIGITAL I/O CONFIGURATION 6

4. STATE TABLE 7

4.1 State Table Legend 8

5. STATE TRANSITION DIAGRAMS 8

6. STATE DESCRIPTIONS 12

6.1 Main Sequence 12

6.2 Entry Sequence 12

6.3 Exit Sequence 13

7. OTHER CONTROL LOGIC 14

1. OVERVIEW

This document defines the sequence of operation for Brookhaven National Laboratory's NASA Space Radiation Laboratory optical turnstile access control system.

The purpose of the NASA Space Radiation Laboratory (NSRL) optical turnstile access control system is to eliminate the need for Main Control Room operators to monitor and control access into and out of the NSRL target area.

The overall function of the integrated system is to ensure that personnel are not present in the target area when beam is imminent. A block diagram is shown below.

The sequence of operation is defined herein using the methodology of state transition diagrams, state tables, and state descriptions. A brief description of this methodology is provided in section 2.

This document, "Optical Turnstile Access System Control Sequence Specification", defines the expected manner in which the system is to perform.

1.1 Abbreviations

The table below defines abbreviations used in this document.

Description	Abbreviation
Light Curtain 1	LC1
Light Curtain 2	LC2
Light Curtain 3	LC3
Turnstile Light Beam 1	TLB1
Turnstile Light Beam 2	TLB2
Turnstile 1	T1
Turnstile 2	T2

2. METHODOLOGY

The methodology of defining system control sequence states is used to functionally describe the desired system operation. The following section summarizes the purpose of the state table, state transition diagram and state description.

2.1 State Table

The state table defines the operation of system control outputs for each state. Control outputs are defined to be de-energized (0 or OFF), energized (1 or ON), or toggling between energized and de-energized (T). When defined as 'T', the control output is usually dependent on one or more input signals.

On the state table, the capital letters in the top heading reference the Digital I/O Configuration list (section 5).

2.2 State Transition Diagram

At any given time during the execution of a cycle, the system must be in one of the defined states. The state transition diagram defines conditions that will cause the system to move from one state to another state. The arrows pointing out of a state to another state define a valid path, and the condition causing the transition is tied to the arrow.

2.3 State Description

The state description defines operations to be performed in each state. The state listed in the column, "STATE", is referenced to the corresponding state in the state transition diagram.

2.4 System Block Diagram

A system block diagram is provided on the following page.

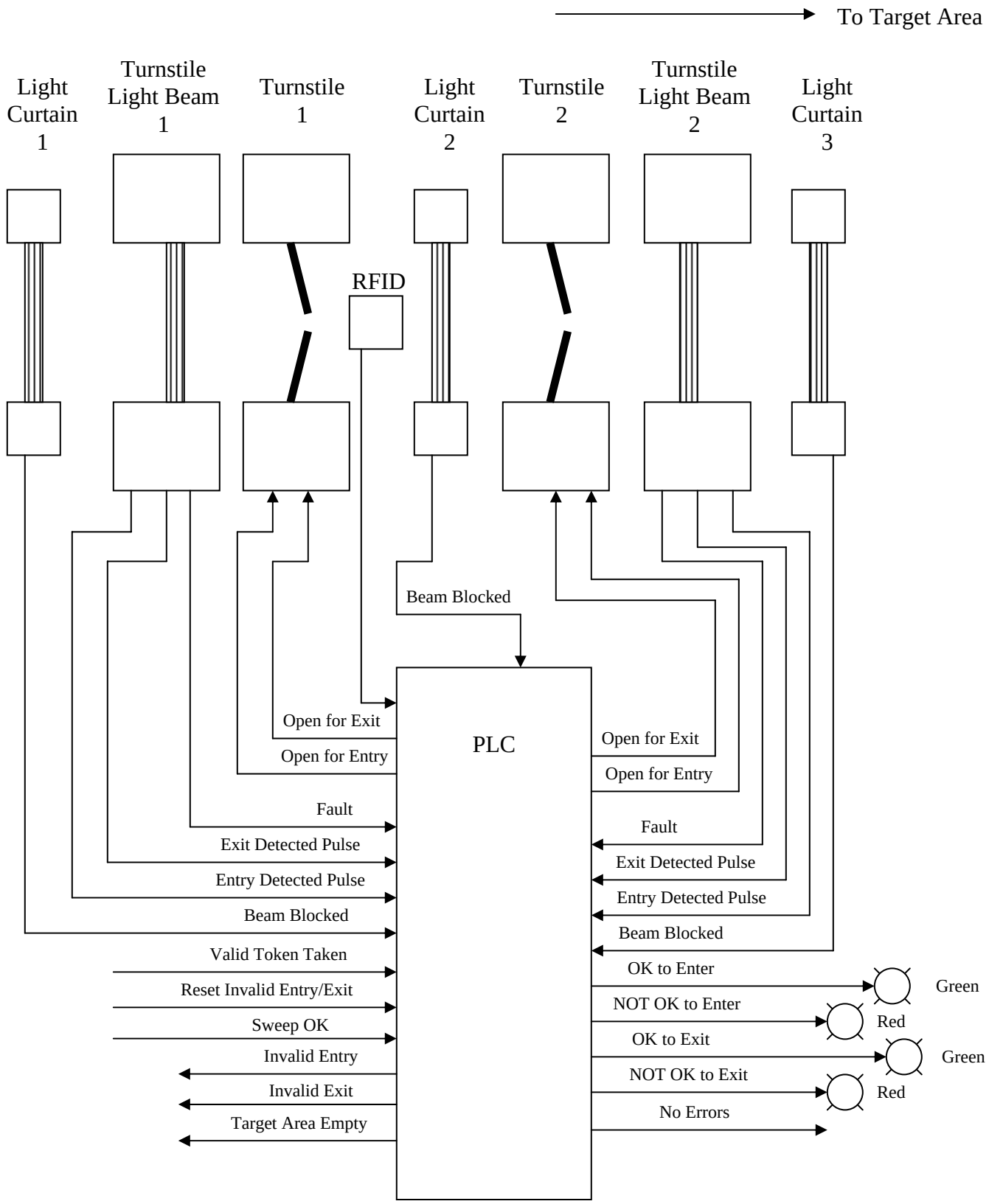

NSRL Optical Turnstile Access System Block Diagram

3. Digital I/O Configuration

REF	Slot	Channel	I/O	Description
	2	0	I	Light Beam 1 Beam Blocked (closed on blocked)
	2	1	I	Turnstile Light Beam 1 Fault (open on fault)
	2	2	I	Turnstile Light Beam 1 Entry Detected (pulse on entry)
	2	3	I	Turnstile Light Beam 1 Exit Detected (pulse on exit)
	2	4	I	Light Curtain 2 Beam Blocked (closed on blocked)
	2	5	I	Turnstile Light Beam 2 Fault (open on fault)
	2	6	I	Turnstile Light Beam 2 Entry Detected (pulse on entry)
	2	7	I	Turnstile Light Beam 2 Exit Detected (pulse on exit)
	2	8	I	Light Curtain 3 Beam Blocked (closed on blocked)
	2	9	I	Valid Token Taken (pulse when valid token taken)
	2	10	I	Error Reset Pushbutton (close to reset)
	2	11	I	Sweep OK (close when OK)
	2	12	I	
	2	13	I	
	2	14	I	
	2	15	I	
A	3	0	O	Target Area Empty (energized indicates empty)
B	3	1	O	Turnstile 1 Open for Entry (energize to open)
C	3	2	O	Turnstile 1 Open for Exit (energize to open)
D	3	3	O	Turnstile 2 Open for Entry (energize to open)
E	3	4	O	Turnstile 2 Open for Exit (energize to open)
F	3	5	O	OK to Enter Indicator (energize=OK, de-energized=NOT OK)
G	2	6	O	OK to Exit Indicator (energize=OK, de-energized=NOT OK)
H	3	7	O	No Errors (de-energized indicates error)
I	4	8	O	Invalid Entry (de-energized indicates invalid entry)
J	4	9	O	Invalid Exit (de-energized indicates invalid exit)
K	4	10	O	Not OK to Enter Indicator (energized= NOT OK)
L	4	11	O	Not OK to Exit Indicator (energized= NOT OK)
M	4	12	O	
N	4	13	O	Count of Persons in Target Area, bit 0
O	4	14	O	Count of Persons in Target Area, bit 1
P	4	15	O	Count of Persons in Target Area, bit 2
Q				Entry, Exit, & RFID Counters Enable (reset counters when disabled)

4. State Table

STATE		A	B	C	D	E	F	G	H	I	J	K	L	M	N	O	P	Q	R	S	T	U	V	W	X	Y
		3-0	3-1	3-2	3-3	3-4	3-5	3-6	3-7	4-0	4-1	4-2	4-3	4-4	4-5	4-6	4-7	ctrEn	xx	xx	xx	xx	xx	xx	xx	xx
Main Sequence																										
0	OFF – Sweep NOT OK	0	0	0	0	0	0	0	0	0	0	1	1	0	N	N	N	0	0	0	0	0	0	0	0	0
0.1	Error on Entry	0	0	0	0	0	0	0	0	1	0	1	1	0	N	N	N	0	0	0	0	0	0	0	0	0
0.2	Error on Exit	0	0	0	0	0	0	0	0	0	1	1	1	0	N	N	N	0	0	0	0	0	0	0	0	0
1	Waiting for Sweep	0	0	0	0	0	0	0	0	0	0	1	1	0	N	N	N	0	0	0	0	0	0	0	0	0
2	Idle	a	0	0	0	0	0	0	1	0	0	1	1	0	N	N	N	0	0	0	0	0	0	0	0	0
2.1	Idle – Target Area Empty	1	0	0	0	0	0	0	1	0	0	1	1	0	N	N	N	0	0	0	0	0	0	0	0	0
2.2	Idle – Target Area Not Empty	0	0	0	0	0	0	1	1	0	0	1	0	0	N	N	N	0	0	0	0	0	0	0	0	0
Entry Sequence																										
3	Wait for LC1 blocked	0	0	0	0	0	1	0	1	0	0	0	1	0	N	N	N	1	0	0	0	0	0	0	0	0
3.1	Wait for TLB1 Entry	0	1	0	1	0	0	0	1	0	0	1	1	0	N	N	N	1	0	0	0	0	0	0	0	0
3.2	Wait for RFID & LC2 Blked	0	1	0	1	0	0	0	1	0	0	1	1	0	N	N	N	1	0	0	0	0	0	0	0	0
3.3	Wait for TLB2 Entry	0	1	0	1	0	0	0	1	0	0	1	1	0	N	N	N	1	0	0	0	0	0	0	0	0
3.4	Wait for LC3 blocked	0	1	0	1	0	0	0	1	0	0	1	1	0	N	N	N	1	0	0	0	0	0	0	0	0
3.5	Check for Valid Entry	0	0	0	0	0	0	0	1	0	0	1	1	0	N	N	N	1	0	0	0	0	0	0	0	0
3.6	Increment Person Count	0	0	0	0	0	0	0	1	0	0	1	1	0	N	N	N	1	0	0	0	0	0	0	0	0
Exit Sequence																										
4	LC3 beam blocked	0	0	1	0	1	0	0	1	0	0	1	1	0	N	N	N	1	0	0	0	0	0	0	0	0
4.1	Wait for TLB2 Exit	0	0	1	0	1	0	0	1	0	0	1	1	0	N	N	N	1	0	0	0	0	0	0	0	0
4.2	Wait for RFID & LC2 Blked	0	0	1	0	1	0	0	1	0	0	1	1	0	N	N	N	1	0	0	0	0	0	0	0	0
4.3	Wait for TLB1 Exit	0	0	1	0	1	0	0	1	0	0	1	1	0	N	N	N	1	0	0	0	0	0	0	0	0
4.4	Wait for LC1 blocked	0	0	1	0	1	0	0	1	0	0	1	1	0	N	N	N	1	0	0	0	0	0	0	0	0
4.5	Check for Valid Exit	0	0	0	0	0	0	0	1	0	0	1	1	0	N	N	N	1	0	0	0	0	0	0	0	0
4.6	Decrement Person Count	0	0	0	0	0	0	0	1	0	0	1	1	0	N	N	N	1	0	0	0	0	0	0	0	0

4.1 State Table Legend

<u>legend</u>

0 control output is de-energized
1 control output is energized
N Digital representation of number of persons in target area

a 1 if count of persons in target area = 0; 1 if count of persons in target area <> 0

5. STATE TRANSITION DIAGRAMS

This section contains the state transition diagrams for definition of the cycle sequence.

5.1 Main Sequence

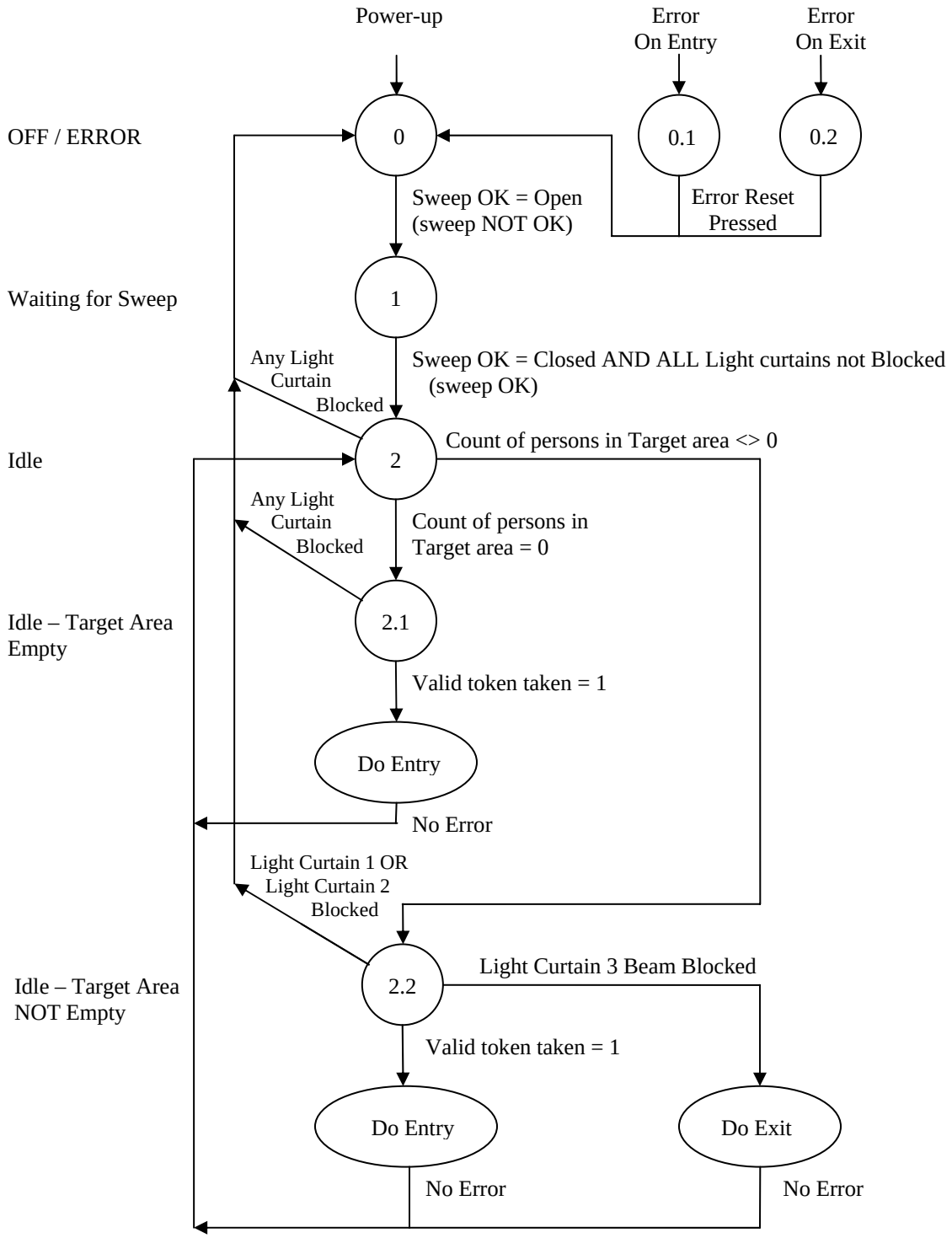

5.2 Entry Sequence

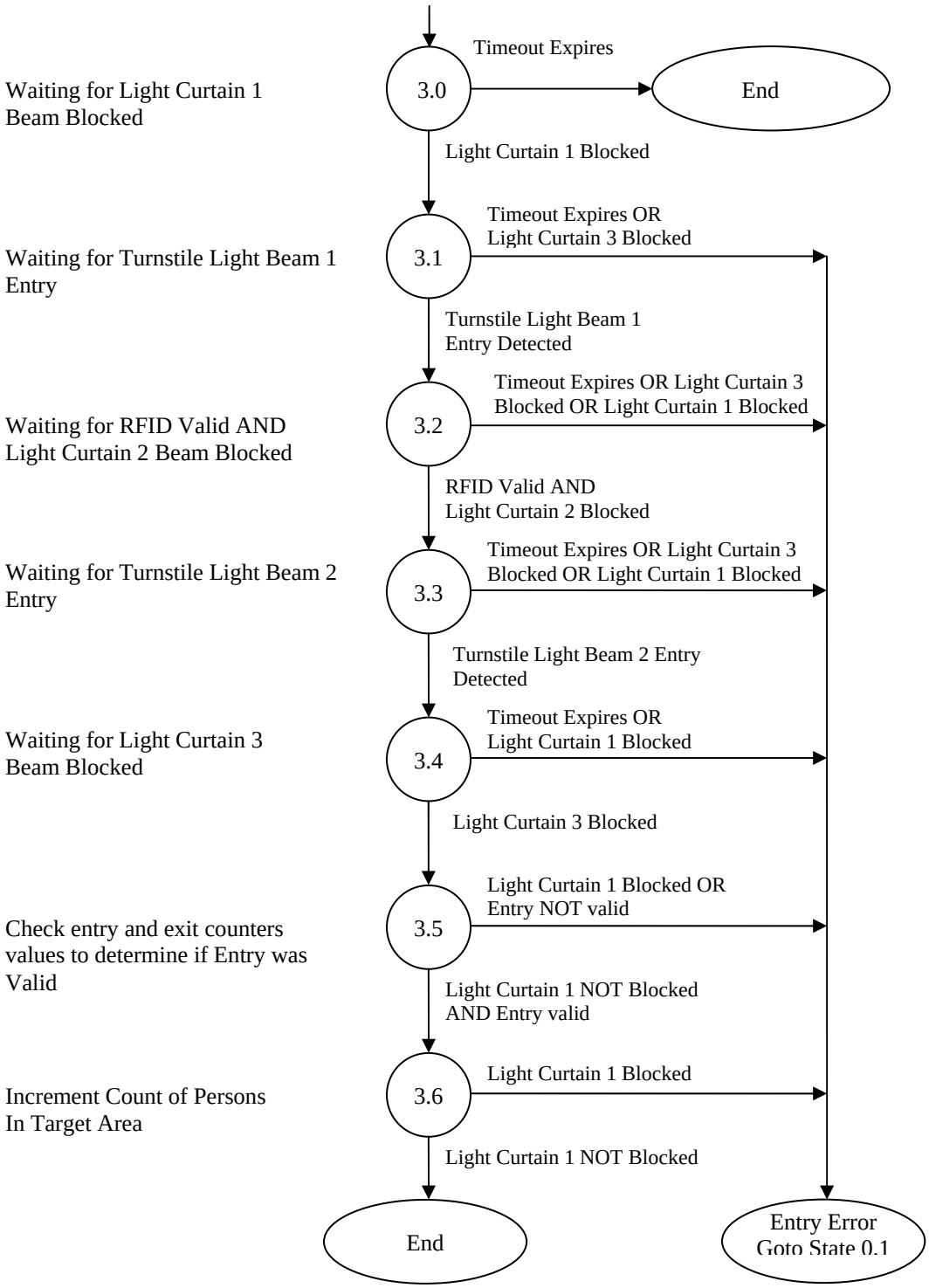

5.3 Exit Sequence

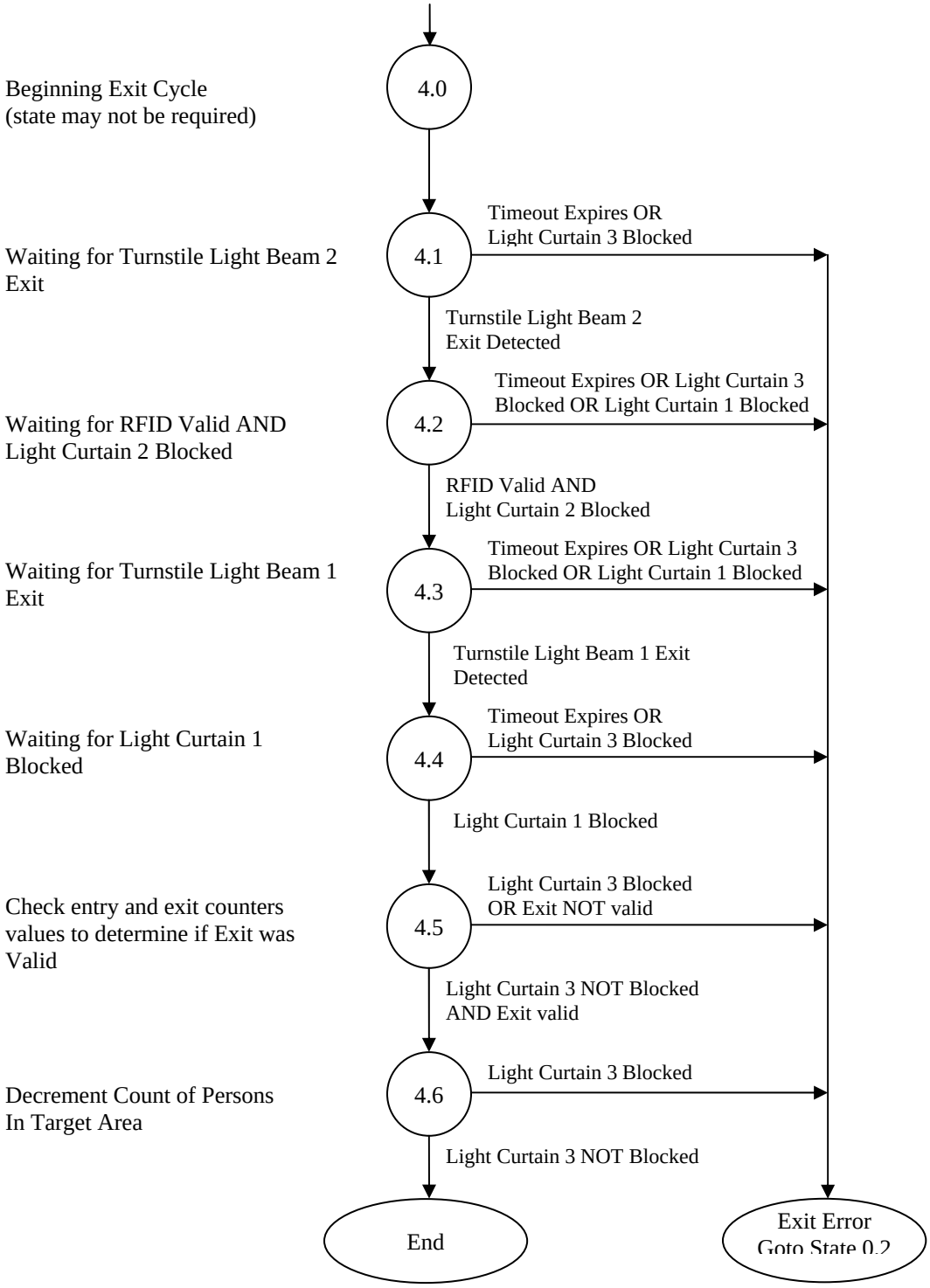

6. STATE DESCRIPTIONS

This section contains a description of the actions to be performed in each state.

6.1 Main Sequence

STATE	DESCRIPTION
0	Off
	On entry into state:
	On exit from state:
	While in state:
0.1	Entry Error occurred
0.2	Exit Error occurred
1	Waiting for sweep
2	Idle
2.1	Idle – Target area empty
2.2	Idle – Target area not empty

6.2 Entry Sequence

3.0	Wait for Light Curtain 1 beam blocked
3.1	Wait for Turnstile Light Beam 1 entry pulse
3.2	Wait for RFID Valid AND Light Curtain 2 beam blocked
3.3	Wait for Turnstile Light Beam 2 entry pulse
3.4	Wait for Light Curtain 3 beam blocked

3.5 Determine if Entry was Valid

While in state:

```
If    (     Turnstile_Light_Beam_1_Exit_Count = 0
  AND Turnstile_Light_Beam_2_Exit_Count = 0
  AND ( (Turnstile_Light_Beam_1_Entry_Count = 1
     OR (Turnstile_Light_Beam_1_Entry_Count = 2 AND Cart_RF_ID_Detected) )
  AND ( (Turnstile_Light_Beam_2_Entry_Count = 1
     OR (Turnstile_Light_Beam_2_Entry_Count = 2 AND Cart_RF_ID_Detected) )
  AND RFID_Person_Count = 1
  )
Then Entry_Valid = YES

Else Entry_Valid = NO
```

3.5 Increment Count of Persons in Target Area

6.3 Exit Sequence

4.0 Beginning of Exit Cycle - Light Curtain 3 beam blocked
Proceed directly to state 4.1

4.1 Wait for Turnstile Light Beam 2 exit pulse

4.2 Wait for RFID Valid AND Light Curtain 2 beam blocked

4.3 Wait for Turnstile Light Beam 1 exit pulse

4.4 Wait for Light Curtain 1 beam blocked

4.5 Determine if Entry was Valid

While in state:

```
If    (     Turnstile_Light_Beam_1_Entry_Count = 0
  AND Turnstile_Light_Beam_2_Entry_Count = 0
  AND ( (Turnstile_Light_Beam_1_Exit_Count = 1
     OR (Turnstile_Light_Beam_1_Exit_Count = 2 AND Cart_RFID_Detected) )
  AND ( (Turnstile_Light_Beam_2_Exit_Count = 1
     OR (Turnstile_Light_Beam_2_Exit_Count = 2 AND Cart_RFID_Detected) )
  AND RFID_Person_Count = 1
        )
Then Exit_Valid = YES

Else Exit_Valid = NO
```

3.5 Decrement Count of Persons in Target Area

7. Other Control Logic

The following counters are required in the program. These counters are enabled as shown in the column “Q” of the state table.

Turnstile_Light_Beam_1_Entry_Count
Turnstile_Light_Beam_1_Exit_Count
Turnstile_Light_Beam_2_Entry_Count
Turnstile_Light_Beam_2_Exit_Count
RFID_Person_Count
RFID_Cart_Count

The following additional control logic is independent of the current state:

IF RFID_Cart_Count = 1
Then Cart_RFID_Detected = TRUE

Name(s) of Risk Team Members: P. Bergh, J. Young, D. Stillwell, J. Williams, R. Karol, J. Scott.	Point Value → Parameter ↓	1	2	3	4	5
Area/Facility Description Title: Collider-Accelerator Department Area/Facility # (if applicable): General Facility FRA 3-06	Occupancy or Use (A)	≤once/year	≤once/month	≤once/week	≤once/shift	>once/shift
Area/Facility Description: General Facility-Wide Ionizing Radiation	Severity (B)	First Aid Only	Medical Treatment	Lost Time	Partial Disability	Death or Permanent Disability
Approved by: *E. Lessard* Date: 5/5/2006 Rev.#: 0	Likelihood (C)	Extremely Unlikely	Unlikely	Possible	Probable	Multiple
Reason for Revision (if applicable): Annual Review				Comments:		

			Risk with Controls in Place					Risk with Additional Controls in Place				
Physical Item or Activity	Hazard(s)	Control(s)	**Occupancy A**	**Severity B**	**Likelihood C**	**Risk* AxBxC**	Control(s) Added to Reduce Risk	**Occupancy A**	**Severity B**	**Likelihood C**	**Risk* AxBxC**	% Risk Reduction
Primary beam	Unshielded proton, electron or ion beam, external radiation	ACS, PASS, security sweeps, postings, crash buttons and chords, C-AD area classification, shielding, dosimetry, training, RSC reviews	1	5	1	5						
Secondary beam	Unshielded beams, external radiation	ACS, PASS, security sweeps, postings, crash buttons and chords, C-AD area classification, shielding, dosimetry, training, locked gates, fenced in areas, RCD surveys, RWPs, work planning, RSC reviews, RCD oversight	1	4	2	8						
Target Areas	Unshielded beam, residual radiation, external radiation	ACS, PASS, security sweeps, postings, crash buttons and chords, C-AD area classification, shielding, dosimetry, training, locked gates, fenced in areas, RCD surveys, RWPs, work planning, RSC reviews, RCD oversight, extra shielding around targets, special keys to target areas	1	5	1	5						
General area radiation	Residual radiation, external radiation	Postings, training, shielding, RCD surveys, TLD area monitoring program, RCD oversight, RWP, work planning	5	1	4	20						
Contamination	Residual radiation, activated fluids, external or internal radiation	Postings, training, RCD surveys, RCD oversight, RWP, work planning, PPE, friskers, keeping contamination areas minimized, response to spills	2	1	4	8						
Internal radiation	Internal radiation	RWP, work planning, PPE, WB counting, sealed tunnel/cave gates to reduce exposure to activated air, delay before entering primary areas to allow decay of isotopes, HEPA vacuums, air sampling, routine contamination survey program, RCD oversight	2	1	3	6						

Storage of Radioactive Materials	Residual radiation, external radiation	Fenced and posted areas, dosimetry, RWPs, work planning, RCD oversight, inspections, RMA inventories, some areas locked, shielding	5	1	4	20						
Radioactive Sources	Internal or external radiation	Training, BNL and C-AD source custodians, source inventory, shielding, locked boxes, leak checks, posting, dosimetry, Chipmunk calibration procedures, locked cage for Chipmunk source	5	2	2	20						
RF Cavities	X-rays	ACS, PASS, shielding, training, RCD surveys, postings, locked areas, procedures for test areas, RWP, work planning	1	5	1	5						
Tours	Internal or external radiation	Postings, trained escorts, RCD concurrence to enter radiation areas, RWP, work planning, training waiver, red TLD, BNL minors policy	3	1	2	6						
Industrial X-Ray Radiography	Unshielded X-Ray exposure	Qualified X-Ray equipment operator, 60 feet of power cable use between tube head and controls, work orders, RWPs, Alarming dosimeters, TLDs, visual boundary control, postings, procedures, HP coverage, surveys.	2	2	1	4						
Further Description of Controls Added to Reduce Risk:												

*Risk:	0 to 20	21 to 40	41-60	61 to 80	81 or greater
	Negligible	Acceptable	Moderate	Substantial	Intolerable

Scientific Technologies Incorporated

EC Declaration of Conformity

Scientific Technologies Incorporated (at 6550 Dumbarton Circle, Fremont, CA 94555-3611, U.S.A.) hereby declares that the following series manufactured products listed below conform with the relevant Essential Health and Safety Requirements (EHSRs) of the European Machinery Directive (98/37/EC) and the relevant requirements of the Low Voltage Directive (73/23/EEC as amended by 93/68/EEC) and with the essential protection requirements of the Electromagnetic Compatibility (EMC) Directive (89/336/EEC, 92/31/EEC and 93/68/EEC).

Perimeter Access PA4600 Series (Single & Multiple Beam Safeguard)
Electro-sensitive protection equipment (ESPE) for perimeter access and area guarding

This product Series has been type-examined using the following transposed harmonized European and IEC standards that were used as a basis for the requirements and tests per **EC Type-Examination Certificate: Registration No. BB 60004266 0001, Report No. 21105691 001 (02/10/2003).**

Certificate for EC Type-Examination EEC Directive 98/37/EC, Annex VI Safety Component, issued by notified body TUV Rheinland Product Safety GmbH (Notified under No. 0197 to the EC Commission)

(**Machinery Directive** - Standards for Safety of Machinery):

IEC 61496-1, -2:1997: (AOPD Type 4), Electro-Sensitive Protective Equipment.

EN 954-1:1996: Safety of machinery – Safety-related parts of control systems, Part 1: General principles for design.

DIN EN60204-1:1998: Safety of machinery – Electrical equipment of machines, Part 1: General requirements.

(**Low Voltage Directive** – Electrical Safety Requirements):

DIN EN 50178:1998: Electronic equipment for use in power installations

(**EMC Directive** - Requirements of the Electromagnetic Compatibility):

EN 55011 A (=C.I.S.P.R. 11) Radiated & Conducted (Disturbance) Emissions
EN 61000-4-2 (Ref: IEC-1000-4-2 or IEC-801-2) Electrostatic Discharge
EN 61000-4-3 (Ref: ENV 50140 or IEC-1000-4-3 or IEC-801-3) Radiated Immunity
EN 61000-4-4 (Ref: IEC-1000-4-4 or IEC-801-4) Electrical Fast Transient/Burst
EN 61000-4-5 (Ref: ENV 50142 or IEC 1000-4-5 or IEC-801-5) Surge Immunity
EN 61000-4-6 (Ref: ENV 50141 or IEC-801-6) Conducted Immunity
EN 61000-4-11 Supply Voltage Dips, Interruptions and Variations

EN 954-1:1996: Safety of machinery – Safety-related parts of control systems, Part 1: General principles for design.
DIN EN60204-1:1998: Safety of machinery – Electrical equipment of machines, Part 1: General requirements.

Signed _____ Date 14 May 2004

Martin D. Krikorian
Quality Director
Scientific Technologies, Inc.

EU Office
STI Scientific Technologies, GmbH
Am Grarock 8
D-33154 Salzkotten, Germany

DECL-000019, Revision C

C E R T I F I C A T E

TÜV

for EC Type-Examination

EEC Directive 98/37/EC, Annex VI

Safety Component

Registration No.: BB 60004266 0001

Report No.: 21105691 001

License Holder:

Scientific Technologies Inc.
6550 Dumbarton Circle
Fremont CA 94555-3611
USA

Manufacturing Plant:

Scientific Technologies Inc.
6550 Dumbarton Circle
Fremont CA 94555-3611
USA

Product: Electro-sensitive protective equipment
AOPD type 4 according to IEC 61496-1, -2

Identification: Perimeter Access Multiple Beam Safeguard PA4600 Series

Protection width: 0.8 m - 70 m
Max. response time: <24 ms

The EC type-examination certificate refers to the above mentioned product. This is to certify the specimen complies with the essential requirements of Annex VI of the directive including the latest amendment. The holder is authorized to use this certificate in connection with the declaration of conformity.

TÜV Rheinland Product Safety GmbH - Zertifizierungsstelle - TÜV Rheinland

Notified Body

Cologne, 10.02.2003

Dipl.-Ing. H.-P. Pape

TÜV Rheinland Product Safety GmbH - Am Grauen Stein - D-51105 Köln

Accredited by Zentralstelle der Länder für Sicherheitstechnik (ZLS).

Notified under No. 0197 to the EC Commission.

CE The CE marking may only be used if all relevant and effective EC Directives are complied with. CE

10/020 7.95Q

CSA INTERNATIONAL

Certificate of Compliance

Certificate: 1485610 (LR90200)

Master Contract: 156365

Project: 1485610

Date Issued: 2003/10/24

Issued to: **Scientific Technologies, Inc.**

6550 Dumbarton Circle
Fremont, California94555-3611
USA
Attention: Doug Barnett

The products listed below are eligible to bear the CSA Mark shown with adjacent indicators 'C' and 'US'

C US

Issued by: Mehrdad Sadeghieh, P. Eng.

Authorized by: Terry Nagy, Operations Manager

PRODUCTS

CLASS 4812 85 - SIGNAL APPLIANCES - Systems - Certified to US Standards
CLASS 4812 05 - SIGNAL APPLIANCES - Systems

Electro-optic presence sensing system, series PA4600, used for whole body detection, indoors, consisted of a transmitter and a receiver, rated:

Receiver: 24 Vdc + 20%, 1.6 A

Transmitter: 24 Vdc + 20%, 100mA

Note: The certification covers electrical safety only.

The 'C' and 'US' indicators adjacent to the CSA Mark signify that the product has been evaluated to the applicable CSA and ANSI/UL Standards, for use in Canada and the U.S., respectively. This 'US' indicator includes products eligible to bear the 'NRTL' indicator. NRTL, i.e. National Recognized Testing Laboratory, is a designation granted by the U.S. Occupational Safety and Health Administration (OSHA) to laboratories which have been recognized to perform certification to U.S. Standards.

CSA INTERNATIONAL

Supplement to Certificate of Compliance

Certificate: 1485610 **Master Contract:** 156365

The products listed, including the latest revision described below, are eligible to be marked in accordance with the referenced Certificate.

Product Certification History

Project	Date	Description
1485610	2003/10/24	Perimeter Access Optical Sensing Device, PA4600.

CSA INTERNATIONAL

Certificate:	1485610 (LR90200)	**Master Contract:**	156365
Project:	1485610	**Date Issued:**	2003/10/24

APPLICABLE REQUIREMENTS

CAN/CSA-C22.2 No 205-M1983 - Signal Equipment

UL 508 - Industrial Control Equipment

Rev. 11.07

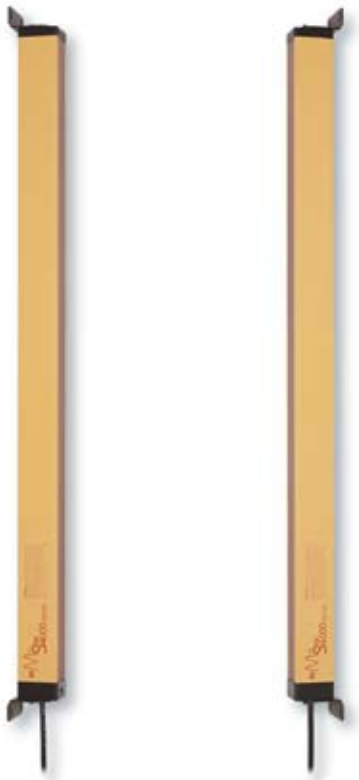

File No. LR90200

MiniSafe®

MS4600

- Resolution: 14 mm (0.55 in.), 19 mm (0.75 in.) or 30 mm (1.18 in.) resolution
- Range: 7.5 m (25 ft.) range for the 14 mm resolution
  20 m (65 ft.) range for the 19 and 30 mm resolutions
- Protected Heights: 14 mm and 19 mm protected heights from 263 to 1393 mm (10 to 55 in.); or 30 mm protected heights from 351 to 2095 mm (14 to 83 in.)
- Compact size — 35 x 50 mm (1.4 x 2 in.)
- Simple "two-box" design — no separate control box required
- No cable required between transmitter and receiver
- Two PNP safety outputs designed to directly switch machine primary control elements
- Available with one NPN or one PNP auxiliary output
- Individual Beam Indicators
- Exact Channel Select
- Floating Blanking
- Choice of operating modes
- MPCE monitoring
- Choice of in-line cable with QD connector or QD connector only
- Adjustable mounting brackets

Options

- DeviceNet™ Interface
- Machine Test Signal (MTS)
- Auxiliary Outputs Alarm/Follow Mode
- Versions for darkroom applications (940 nm), consult factory
- Muting through RM-3 module

Description

A MiniSafe MS4600 system consists of a transmitter and receiver of equal height. Since the control reliable circuitry is contained in the receiver and transmitter, no separate control box is required.

Despite its compact dimensions, the MS4600 comes with a complete feature set. Individual Beam Indicators are included to simplify alignment. When an infrared beam is out of alignment, the corresponding Individual Beam Indicator will glow red.

Two solid-state safety outputs provide 500 mA of current at 24 VDC.

The ability to select Automatic Start and Start/Restart Interlock modes means that the MS4600 can be configured for either point-of-operation or perimeter guarding.

Exact Channel Select allows the MS4600 detection zone to have permanently blocked beams. This is valuable if tooling or other machine parts must permanently obstruct a portion of the zone. Exact Channel Select programming is as easy as pushing a button.

Floating Blanking is useful when process material or parts must transit through the detection zone. Floating Blanking allows up to two beams to be blocked anywhere in the zone.

Machine primary control element monitoring is required for control reliable safety. MPCE

A Go to the Engineering Guide
For in-depth information on safety standards and use.

OMRON SCIENTIFIC TECHNOLOGIES, INC.
USA Tel. 1/888/510-4357 Canada Tel. 1/866/986-6766

For the Latest Information
On the Internet: www.sti.com or www.omron.ca

monitoring is built into the MS4600 rather than being required externally.

In-line connector cables and adjustable mounting brackets allow the MS4600 to fit in space-constrained locations and simplify installation.

DeviceNet Option

This optional interface allows an MS4600 system to communicate non-safety related data across this popular fieldbus. As the de facto standard for fieldbus communications, DeviceNet is widely employed in the automotive, semiconductor and other industries.

Monitoring of a DeviceNet equipped light curtain provides the process control system with the following non-safety information: manufacturer; product name; operating mode; detection zone status; solid-state safety output status; signal strength; number of beams installed; number of beams selected; MPCE monitoring enabled/disabled; floating blanking active/inactive; exact channel select active/inactive; blanking pattern for exact channel select; receiver diagnostic codes; error codes and descriptions.

DeviceNet and the MiniSafe MS4600 provide a powerful automation solution.

MTS Option

Machine Test Signal (MTS) is an optional feature on the MS4600 series light curtain. MTS allows the machine control system to check for the proper operation of the light curtain safety outputs by simulating a beam blocked state on the transmitter.

Alarm/Follow Mode Option

The non-safety output can be configured to have either “alarm” or “follow” functionality. “Alarm” mode means that the non-safety outputs will be de-energized if the system is behaving normally and energized if the system is in a faulted/interlocked state and will remain this way until the condition is cleared. “Follow” mode mimics the state of the solid-state safety outputs, meaning they will be active when the system is in the machine run state and inactive when the system is in the machine stopped state.

▪ Applications

Application ❶

With a range of 20 m a MiniSafe MS4600 system could be used to guard the perimeter of a large filter press. In this application the small 19 mm (0.75 in.) minimum object resolution would allow the curtain to be mounted closer than many perimeter guarding systems and since there is no separate control box, long cable runs are not required.

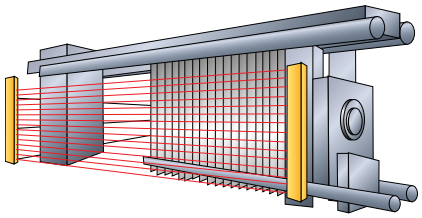

Application ❷

The small minimum object resolution, quick response time, and feature set of the MS4600 make it perfect for guarding metal forming equipment. In this application, floating blanking allows the material to bend up through the detection zone without sending a stop signal to the guarded machine.

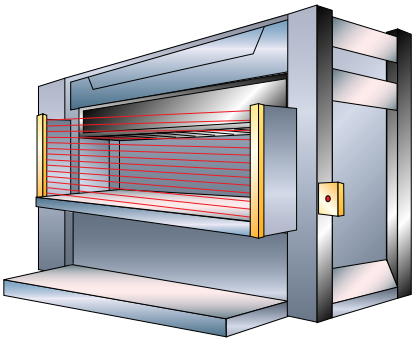

Using Solid-state Outputs

Extreme versatility is a feature of the solid-state outputs from the MiniSafe MS4600. These outputs can be connected to an Omron STI RM-series resource module, a safety monitoring and control device, or in many cases, directly to the primary control element of the guarded machine.

Connecting Via an RM-1 Module

The Omron STI RM-1 module provides force-guided relay outputs for machine control. OSSD (safety) outputs 1 and 2 are connected to the RM-1 and provide the power necessary to energize its relays.

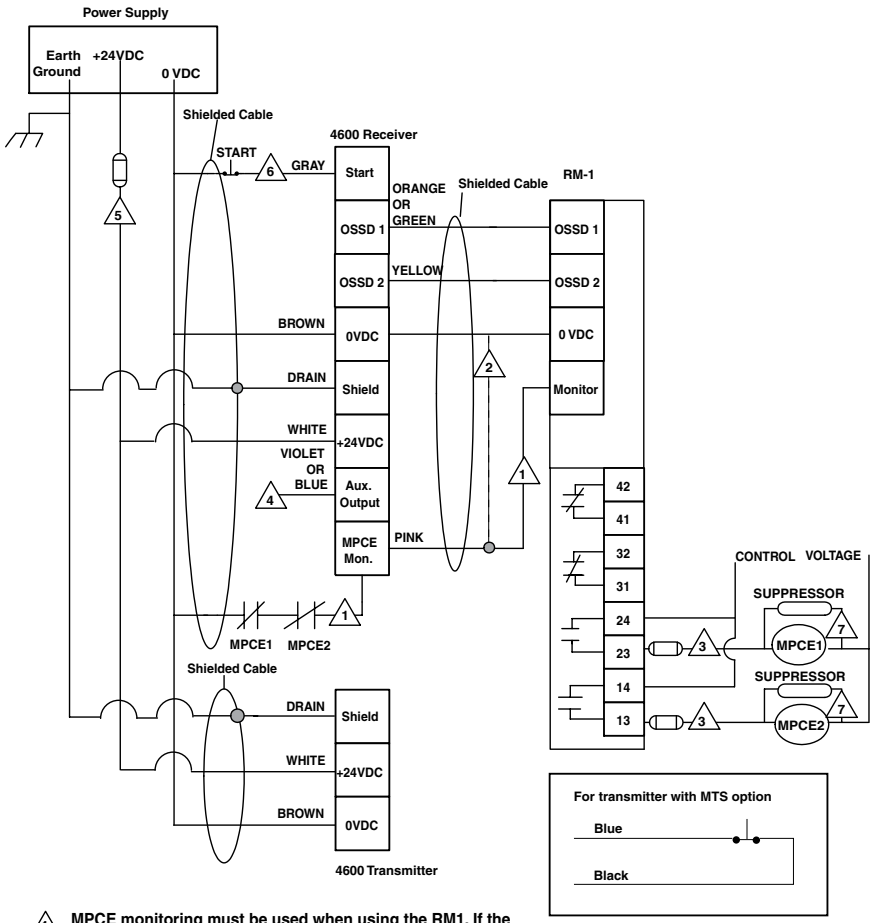

1. MPCE monitoring must be used when using the RM1. If the RM1 is the Final Switching Device connect the Pink wire to the MONITOR terminal of the RM1. If force-guided control relays are used as Final Switching Devices they must be monitored, connect the Pink wire though N/C contacts to 0 VDC. (Do not connect both.)

2. For testing prior to installation, the user may select MPCE OFF(default factory setting). In this case the MPCE line (pink wire) must be connected to the system 0 VDC line.

3. User supplied over current protection, 6 A max.

4. Auxilary Output connect to PLC (optional)

5. User-supplied fuse.

6. If remote start is not used, connect the start line (grey wire) to 0 VDC.

7. Verify that the final switching devices are properly suppresed.

A Go to the Engineering Guide
For in-depth information on safety standards and use.

Connecting Via an RM-2 Module

The Omron STI RM-2 module provides force-guided relay outputs for machine control as well as a convenient location to terminate all outputs and inputs from the MS4600.

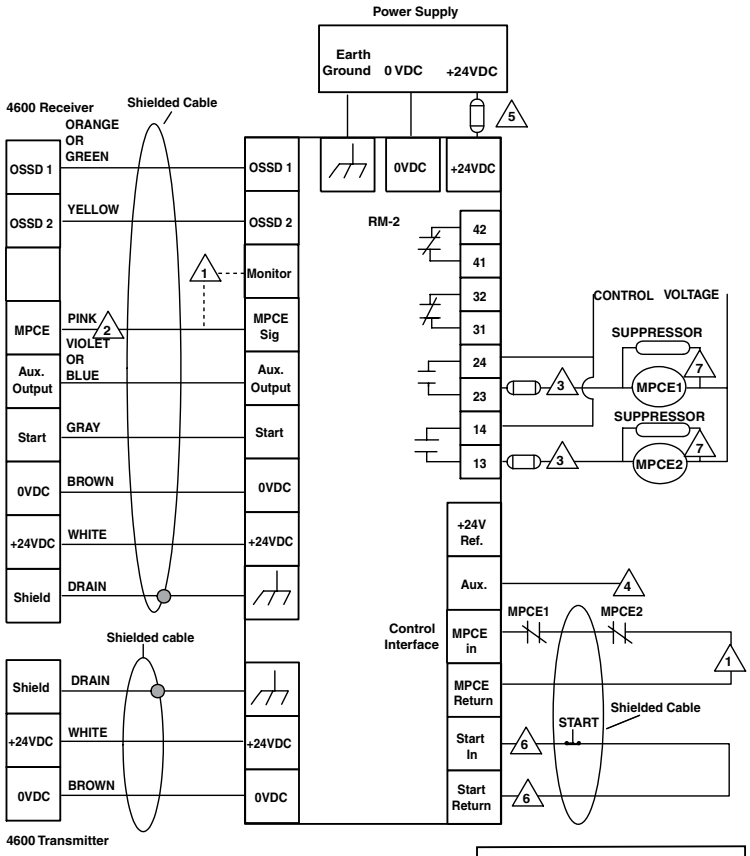

1 MPCE monitoring must be used when using the RM2. If the RM2 is the Final Switching Device connect the Pink wire to the MONITOR terminal of the RM2. If force-guided control relays are used as Final Switching Devices connect the Pink wire to the MPCE Sig. terminal. Then connect a set of N.C. contacts from MPCE1 and MPCE2 to the MPCE in and MPCE return terminals. (Do not connect both.)

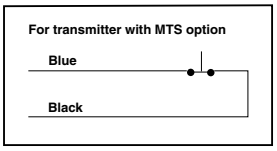

2 For testing prior to installation, the user may select MPCE OFF (default factory setting). In this case the MPCE line (pink wire) must be connected to the system 0 VDC line.

3 User-supplied over current protection, 6 A max.

4 Auxilary output-connect to PLC (optional).

5 User-supplied fuse.

6 If remote start is not used, install a jumper across the Start connections at the Control Interface terminals.

7 Verify that the final switching devices are properly suppressed.

■ *Using Solid-state Outputs (continued)*

Connecting to a Safety Monitoring Device

The wiring from the MS4600 to the machine control circuit must be control reliable. Safety devices, such as the MS4600 should not depend on a PLC to stop a guarded machine. However, safety related monitoring devices are now available. Note that all safety inputs are directed to the monitoring device which also performs the MPCE monitoring function.

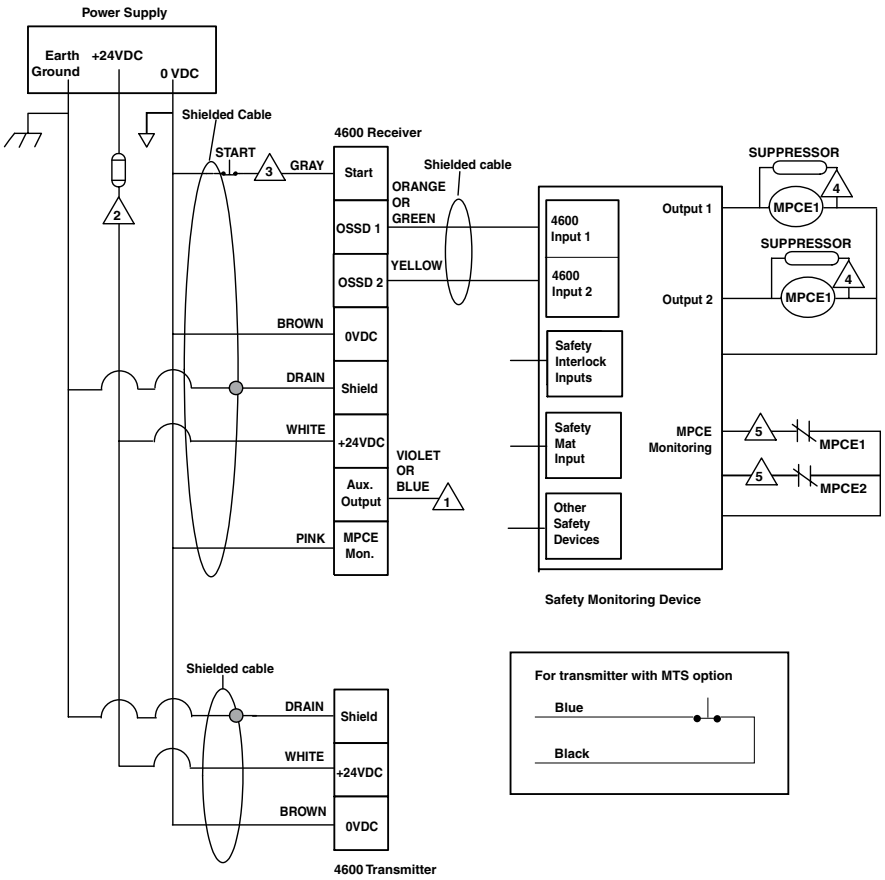

1. Auxilary Output connect to PLC (optional)
2. User-supplied fuse.
3. If remote start is not used, connect the start line (grey wire) to 0 VDC.
4. Verify that the final switching devices are properly suppressed.
5. The Safety Monitoring Device must monitor the MPCE's Normally Closed Contacts.

A Go to the Engineering Guide
For in-depth information on safety standards and use.

Connecting Via Two Force-Guided Relays

FGR series relays provide force-guided outputs for machine control.

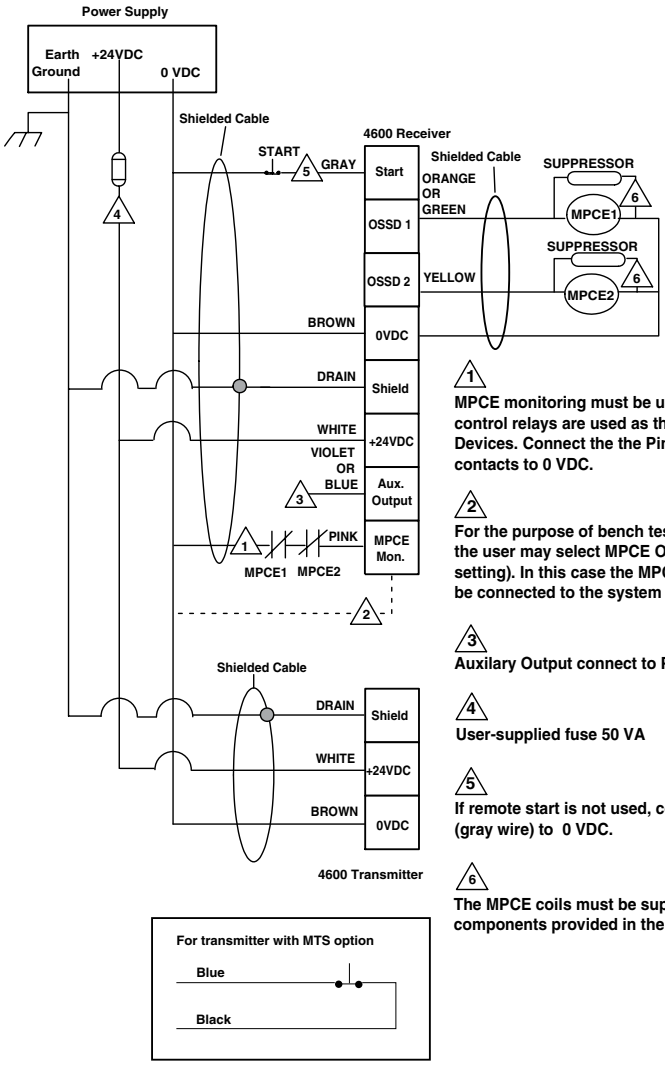

1. MPCE monitoring must be used when force-guided control relays are used as the Final Switching Devices. Connect the the Pink wire though N/C contacts to 0 VDC.

2. For the purpose of bench testing prior to installation, the user may select MPCE OFF (default factory setting). In this case the MPCE line (pink wire) must be connected to the system 0 VDC line.

3. Auxilary Output connect to PLC (optional)

4. User-supplied fuse 50 VA

5. If remote start is not used, connect the start line (gray wire) to 0 VDC.

6. The MPCE coils must be suppressed with the components provided in the documentation kit.

Module Dimensions—mm/in.

RM-1

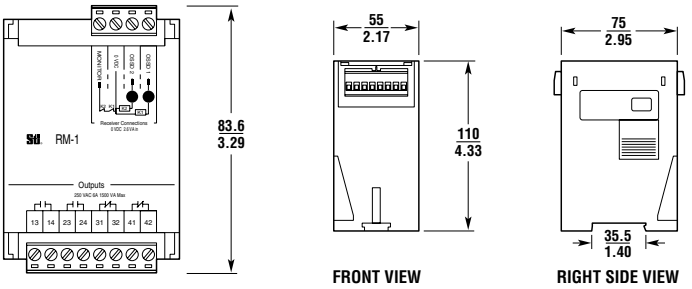

RM-2

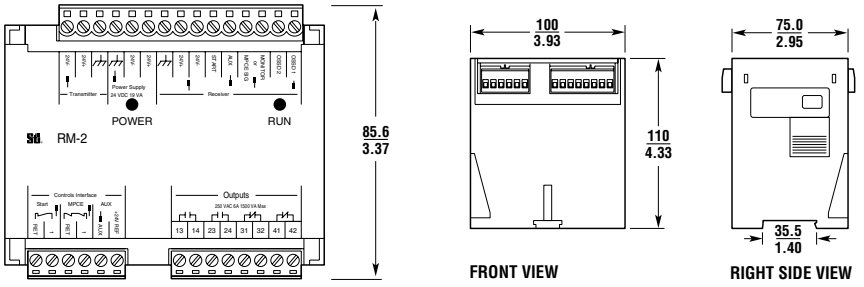

RM-3

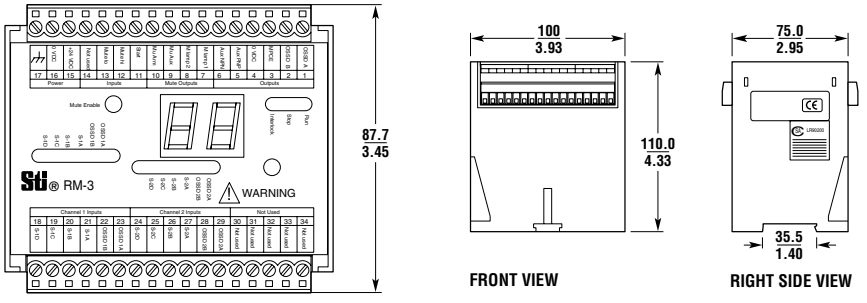

RM-4

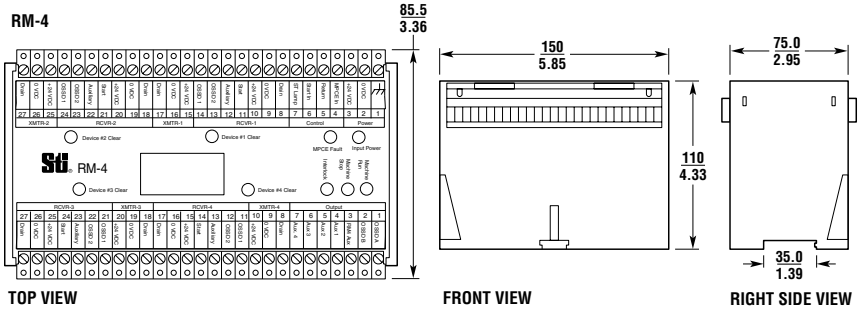

Available Modules

The following relay modules are available to extend the function of the MS4600 series:

RM-1: Provides force-guided safety relay outputs using input from MS4600 system. Receives required 24 VDC power direct from MS4600 solid-state safety outputs. DIN rail mount. Removable terminal blocks.

RM-2: Provides a single location to terminate all inputs and outputs to MS4600 system. Also provides force-guided safety relay outputs using input from MS4600 system. Requires external 24 VDC power supply which also provides power to the MS4600. DIN rail mount. Removable terminal blocks.

RM-3: Provides muting, the temporary automatic suspension of the safety function, for up to two safety light curtains. Requires external 24 VDC power supply. It has DIN-rail mount and removable terminal blocks.

RM-4: Up to four MS4600 systems can be connected to the RM-4. It provides two PNP safety outputs and one user selectable NPN or PNP non-safety, auxiliary output. Additionally, connections are provided for the auxiliary output of each safety device. It requires external 24 VDC power supply which also provides power to the MS4600.

In addition to the above modules, the **RM-X**, **RM2-AC** and **RM2-AC-IP** are also compatible with the MS4600.

For information on Resource Modules, see page D138

Specifications for Transmitter and Receiver

Performance

Protected Height: 14 and 19 mm — 263 to 1393 mm in 86 mm increments (10.3 to 54.5 inches in 3.4 inch increments)
30 mm — 350 to 2090 mm (13.8 to 82.6 in.)

Operating Range

MS46SR: 0.3 to 7.5 m (1 to 25 ft.) for 14 mm resolution
0.3 to 9 m (1 to 30 ft.) for 19 mm and 30 mm resolutions

MS46LR: 0.3 to 20 m (1 to 65 ft.)/Not available with 14 mm resolution

Resolution: 14 mm (0.55 in.), 19 mm (0.75 in.) or 30 mm (1.18 in.). Use of Exact Channel Select and/or Floating Blanking may increase this value.

Response Time (varies by protected height): See tables at right

Input Voltage (V_{in}): 24 VDC ± 20%

Input Power: 14 watts (without load on the outputs)

Safety Output Ratings: Two PNP outputs sourcing 500 mA max @ V_{in} (see note 1). Short circuit protected.

Auxiliary (Non-Safety) Output Ratings: One NPN output sinking 100 mA max @ V_{in} or one PNP output sourcing 100 mA @ V_{in} (see notes 1 and 2)

Power Supply: 24 VDC ± 20%. The rating depends on the current requirements of the loads attached to the outputs (see note 3). The power supply must meet the requirements of IEC 60204-1 and 61496-1. Omron STI part number 42992 or equivalent.

MPCE Monitoring Circuit: 50 mA steady state @ 24 VDC

Start/Restart Input: N.C. or N.O. momentary contact (20 mA consumption)

Effective Aperture Angle: ±2.5° maximum, transmitter and receiver at operating range greater than 3 m (9.8 ft.).

Light Source: GaAlAs Light Emitting Diode, 850 nm

Indicators

Transmitter: power applied

Receiver: machine run, machine stop, interlock/fault; channel select/floating blanking, individual beam

Mechanical

Enclosure: Polyurethane powder-painted aluminum

Cable Length: Optional cables are available in 10, 15, 30 and 50 m lengths

Cable Connections

Receiver: 8-pin

Transmitter: 3-pin standard, 5-pin with MTS

Environmental

Protection Rating: NEMA 4, 12; IP65

Operating Temperature: 0 to 55°C (32 to 131°F)

Relative Humidity: 95% maximum, non-condensing

Vibration: 5-60 Hz maximum on all three axes

Shock: 10 g for 0.016 seconds, 1,000 shocks for each axes on two axes

Conformity/Approvals

Conforming to Standards: ANSI/RIA R15.06-1999, ANSI B11.19-2003, OSHA 1910.217(c), OSHA 1910.212

Other Approvals: All MS4600 systems have been EC type examined to the requirements of IEC 61496-1, -2 for a Type 4 ESPE. TUV Registration No: BB991007101. UL1998

Response Times for Systems With 14 mm and 20 mm Resolutions

Protected Height (mm/in.)	No. of Beams	Response Time (seconds)
263/10.4	24	<0.016
350/13.8	32	<0.017
437/17.2	40	<0.019
524/20.6	48	<0.021
611/24.1	56	<0.023
698/27.5	64	<0.025
785/30.9	72	<0.027
872/34.3	80	<0.031
959/37.7	88	<0.033
1046/41.2	96	<0.035
1133/44.6	104	<0.035
1220/48.0	112	<0.037
1306/51.4	120	<0.039
1393/54.9	128	<0.040

Response Times for Systems With 30 mm Resolutions

Protected Height (mm/in.)	No. of Beams	Response Time (seconds)
350/13.8	16	<0.014
524/20.6	24	<0.016
698/27.5	32	<0.017
872/34.3	40	<0.019
1046/41.2	48	<0.021
1220/48.0	56	<0.023
1393/54.9	64	<0.025
1570/61.8	72	<0.027
1741/68.6	80	<0.029
1915/75.4	88	<0.031
2090/82.3	96	<0.033

Specifications are subject to change without notice.

Note 1: Voltage available at the outputs is equal to V_{in} - 2.0 VDC.

Note 2: Total current required by the two solid-state outputs and the aux. output should not exceed 1.1 A.

Note 3: Total system current requirement is the sum of the transmitter 285 mA and receiver 1.4 A max. (Receiver 300 mA + OSSD1 load + OSSD2 load + Aux. output load)

■ MS4600-14 and -20 Dimensions—mm/in.

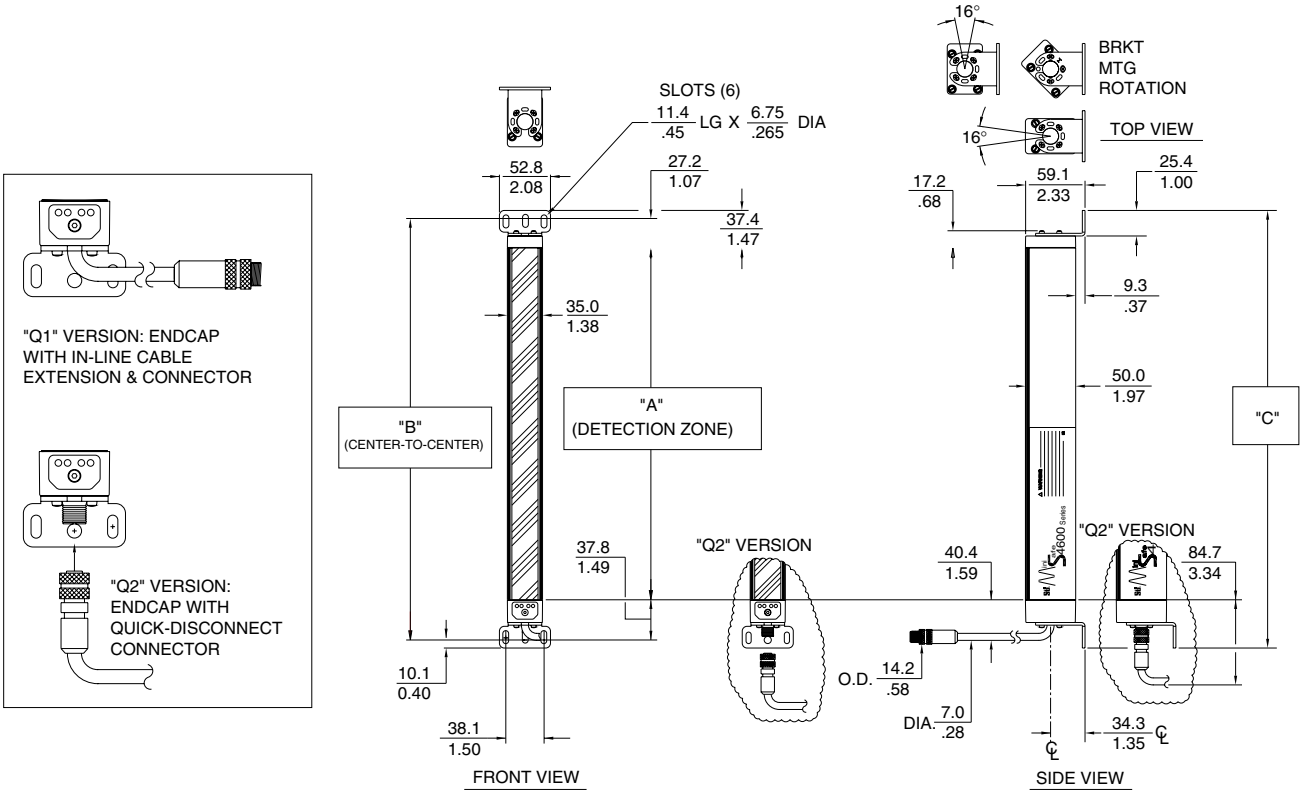

DIMENSIONS: mm (+\-.3) / INCHES (+\-.01)

A = DETECTION ZONE B = A + 65.0 / 2.56 C = A + 85.4 / 3.36

MiniSafe MS4600-14 and MS4600-20 Dimensions

	MS46-X-260-14 MS46-R-260-14 MS46-X-260-20 MS46-R-260-20	MS46-X-350-14 MS46-R-350-14 MS46-X-350-20 MS46-R-350-20	MS46-X-435-14 MS46-R-435-14 MS46-X-435-20 MS46-R-435-20	MS46-X-520-14 MS46-R-520-14 MS46-X-520-20 MS46-R-520-20	MS46-X-610-14 MS46-R-610-14 MS46-X-610-20 MS46-R-610-20	MS46-X-700-14 MS46-R-700-14 MS46-X-700-20 MS46-R-700-20	MS46-X-785-14 MS46-R-785-14 MS46-X-785-20 MS46-R-785-20
A mm/in.	263/10.4	350/13.8	437/17.2	524/20.6	611/24.1	698/27.5	785/30.9
B mm/in.	328/12.9	415/16.3	502/19.8	589/23.1	676/26.6	763/30.0	851/33.5
C mm/in.	348/13.7	435/17.1	522/20.6	609/24.0	696/27.4	783/30.8	870/34.3
System Shipping Weight							
kg/lb.	4.5/10	4.8/11	5.2/11	5.6/12	5.9/13	6.2/14	6.6/15

	MS46-X-870-14 MS46-R-870-14 MS46-X-870-20 MS46-R-870-20	MS46-X-955-14 MS46-R-955-14 MS46-X-955-20 MS46-R-955-20	MS46-X-1045-14 MS46-R-1045-14 MS46-X-1045-20 MS46-R-1045-20	MS46-X-1130-14 MS46-R-1130-14 MS46-X-1130-20 MS46-R-1130-20	MS46-X-1215-14 MS46-R-1215-14 MS46-X-1215-20 MS46-R-1215-20	MS46-X-1305-14 MS46-R-1305-14 MS46-X-1305-20 MS46-R-1305-20	MS46-X-1390-14 MS46-R-1390-14 MS46-X-1390-20 MS46-R-1390-20
A mm/in.	872/34.3	959/37.7	1046/41.2	1133/44.6	1220/48.0	1306/51.4	1393/54.9
B mm/in.	937/36.9	1024/40.3	1111/43.7	1198/47.2	1285/50.6	1372/54.0	1459/57.4
C mm/in.	957/37.7	1044/41.1	1131/44.5	1218/48.0	1305/51.4	1392/54.8	1479/58.2
System Shipping Weight							
kg/lb.	6.9/15	7.3/16	8.2/18	8.5/19	8.9/20	9.2/20	9.6/21

■ MS4600-30 Dimensions—mm/in.

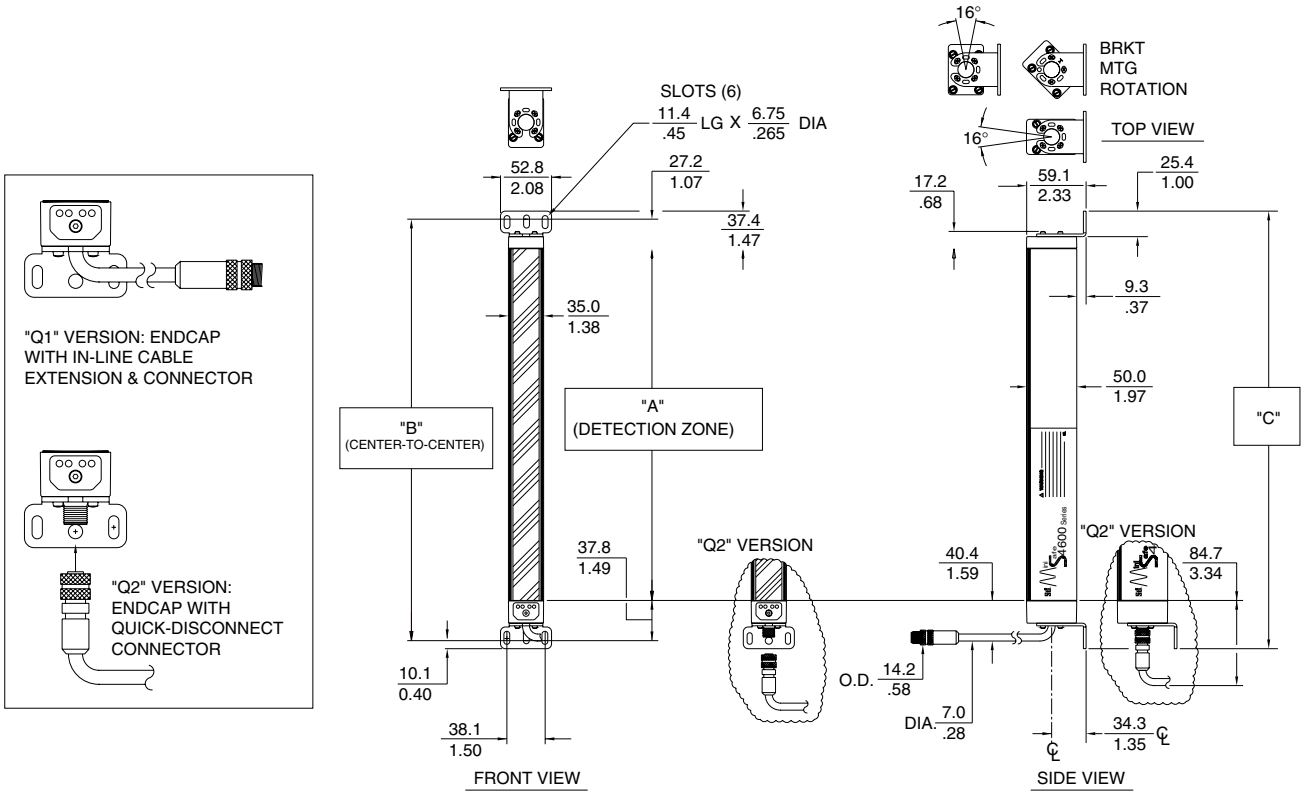

DIMENSIONS: mm (+\-.3) / INCHES (+\-.01)

A = DETECTION ZONE B = A + 65.0 / 2.56 C = A + 85.4 / 3.36

MiniSafe MS4600-30 Dimensions

	MS46-X-350-30 MS46-R-350-30	MS46-X-520-30 MS46-R-520-30	MS46-X-700-30 MS46-R-700-30	MS46-X-870-30 MS46-R-870-30	MS46-X-1045-30 MS46-R-1045-30	MS46-X-1215-30 MS46-R-1215-30
A mm/in.	350/13.8	524/20.6	698/27.5	872/34.3	1046/41.2	1220/48.0
B mm/in.	415/16.3	589/23.2	763/30.0	938/36.9	1111/43.7	1285/50.6
C mm/in.	435/17.1	609/24.0	783/30.8	957/37.7	1131/44.5	1305/51.4
System Shipping Weight						
kg/lb.	4.8/11	5.6/12	6.2/14	6.9/15	8.2/18	8.9/20

	MX46-X-1390-30 MX46-R-1390-30	MS46-X-1570-30 MS46-R-1570-30	MS46-X-1745-30 MS46-R-1745-30	MS46-X-1920-30 MS46-R-1920-30	MS46-X-2095-30 MS46-R-2095-30
A mm/in.	1393/54.9	1570/61.8	1741/68.6	1915/75.4	2090/82.3
B mm/in.	1459/57.4	1635/64.4	1807/71.1	1981/78.0	2155/84.8
C mm/in.	1479/58.2	1655/65.2	1827/71.9	2001/78.8	2175/85.6
System Shipping Weight					
kg/lb.	9.6/21	10.0/22	10.4/23	10.9/24	11.8/26

Ordering

To order a MiniSafe MS4600 system, simply fill in these fields.

___ - ____ - ____ - ___ - ____X - ____R - ____ - ____ - ____ - ____ - ____ - ____
❶ ❷ ❸ ❹ ❺ ❺ ❻ ❼ ❽ ❾ ❿ ⓫

❶ Information required. Represents the system operating range. *For applications where the transmitter and receiver will be mounted less than 7.5 m (25 ft.) or 9 m (30 ft.) apart (depending on resolution), please select the SR version.*

Designator	Description
MS46SR	0.3 to 7.5 m (1 to 25 ft.) for 14 mm resolutions 0.3 to 9 m (1 to 30 ft.) for 20 and 30 mm resolutions
MS46LR	0.3 to 20 m (1 to 65 ft.) for 20 and 30 mm resolutions (Not available for 14 mm)

❷ Information required. Represents the minimum object resolution of the system.

Designator	Minimum Object Resolution
14	14 mm (0.55 in.)
20	19 mm (0.75 in.)
30	30 mm (1.18 in.)

❸ Information required. Represents the coverage height of the detection zone.

Designator	Description
260*	263 mm (10.4 in.)
350	351 mm (13.8 in.)
435*	437 mm (17.2 in.)
520	524 mm (20.6 in.)
610*	611 mm (24.1 in.)
700	698 mm (27.5 in.)
785*	785 mm (30.9 in.)
870	872 mm (34.3 in.)
955*	959 mm (37.7 in.)
1045	1046 mm (41.2 in.)
1130*	1133 mm (44.6 in.)
1215	1220 mm (48.0 in.)
1305*	1306 mm (51.4 in.)
1390	1393 mm (54.9 in.)
1570**	1567 mm (61.8 in.)
1745**	1741 mm (68.6 in.)
1920**	1915 mm (75.4 in.)
2095**	2090 mm (82.3 in.)

* Not available in 30 mm resolutions
** Only available in 30 mm resolutions

❹ Information required. Represents the connector type for transmitter and receiver.

Designator	Description
Q1	In-line cable with quick disconnect (QD) connector (pig tail)
Q2	QD connector

❺ Information required. Represents transmitter (X) and receiver (R) cable length. Cables can be shortened in the field.

Designator	Description
10	10 m (33 ft.)
15	15 m (49 ft.)
30	30 m (99 ft.)
50	50 m (164 ft.)

❻ Information required. Represents the start/restart input type.

Designator	Description
NC	Normally closed
NO	Normally open

❼ Information required. Indicate the Auxiliary output configuration.

Designator	Description
FN	NPN output follow solid-state safety outputs
FP	PNP output follow solid-state safety outputs
AN	NPN output operate only in Alarm status
AP	PNP output operate only in Alarm status

❽ Information optional. Indicate optional MTS on transmitter.

Designator	Description
M	Include MTS
(Blank)	No MTS

❾ Information optional. Indicate optional DeviceNet interface.

Designator	Description
RV	DeviceNet Installed
(Blank)	No DeviceNet

❿ Information optional. Indicate optional DeviceNet cable.

Designator	Description
D	6 m (20 ft.) Cable
(Blank)	No DeviceNet Cable

⓫ Information optional. Indicate optional RM relay module.

Designator	Description
RM1	Include RM-1 Resource Module
RM2	Include RM-2 Resource Module
RM2A	Include RM-2AC Resource Module
RM2AP	Include RM-2AC-IP Resource Module, IP65
RM3	Include RM-3 Resource Module
RM4	Include RM-4 Resource Module
RMX	Include RM-X Resource Module
(Blank)	Do not include Resource Module

For information on Resource Modules, see page D138

For information on safety light curtain accessories, see page D184

A Go to the Engineering Guide
For in-depth information on safety standards and use.

Safety Standards and Precautions

All models of the MiniSafe MS4600 meet ANSI/RIA R15.06-1999 and ANSI B11.19-2003. When used with mechanical power presses, OSHA industrial safety standards apply as stated in 1910.217(c). For other applications, the machine guarding requirements found in section 1910.212 apply. The MiniSafe MS4600 series meets ANSI control reliability requirements for point-of-operation presence sensing devices.

MS4600 systems have been EC type examined to the requirements of IEC 61496-1, -2 for a Type 4 ESPE.

The MiniSafe MS4600 should only be used on machinery that can consistently and immediately stop anywhere in its cycle or stroke. Never use a MiniSafe MS4600 on a full revolution clutched power press or machine. If the light curtain does not protect all access to the point of operation, the unprotected access must be guarded by other appropriate devices such as mechanical guards.

The purchaser, installer and employer have the responsibility to meet all local, state and federal government laws, rules, codes or regulations relating to the proper use, installation, operation and maintenance of this control and the guarded machine. See the Installation and Operation Manual for additional information.

All application examples described are for illustration purposes only. Actual installations will differ from those indicated.

PathMinder 2000 Series Oval Optical Turnstiles
Generic Specifications

v1.6 2003/09/24

Note: some options are denoted by [option 1 | option 2]

1. Optical Turnstiles
   - 1.1. General description: The optical turnstile system shall monitor and be able to restrict pedestrian traffic between public and secure areas. Each turnstile lane shall use an array of optical sensors to determine the number and direction of persons passing through the lane. Each turnstile shall be able to authorize passage to those persons presenting a valid electronic security card (or other authentication device). Turnstiles shall be integrated with the building access control system.
   - 1.2. Physical description:
     - 1.2.1. The optical turnstile system shall be composed of electrically controlled barrier free optical turnstiles [permanently mounted to floor | mounted on ½" thick aluminum platforms].
     - 1.2.2. The first and single lanes shall consist of the main detection and activation unit containing optical receivers as required by the design of the system.
     - 1.2.3. Subsequent units ("interlanes") shall integrate the control, detection and lighting systems so that the total number of units for a series of lanes in one location shall be equal to the number of lanes, plus one.
   - 1.3. Turnstile needs:
     - 1.3.1. The installation shall consist of [NN] first lanes and [NN] interlanes.
     - 1.3.2. The turnstiles shall be deployed in [a straight line | a staggered diagonal row, with each unit parallel but offset from the next | an arc].
   - 1.4. Appearance: Each unit shall be housed in a brushed #4 stainless steel housing with easily accessed but discrete fasteners, oval in plan with dimensions approximately 27" in length by 9" in width by 41" in height. Each unit's internal structure shall be made of steel.
   - 1.5. Detection sensors: Design of the unit shall feature at least 12 optical transmitters and 12 optical receivers
     - 1.5.1. Each sensor shall be composed of a separate transmitter and receiver; no reflectors shall be used.
     - 1.5.2. Each sensor shall resist all interference from natural and indoor lighting.
     - 1.5.3. Each sensor shall use pulsed beams (beams that rapidly turn on and off) to allow perfect operation in direct sunlight and so as not to be fooled by a flashlight.
     - 1.5.4. Each infrared beam shall have a minimum transmitted span of 20° to allow for perfect operation when turnstiles are dramatically misaligned. Units that require careful alignment for proper operation shall not be acceptable.
     - 1.5.5. Sensors shall be deployed in a matrix configuration, such that each optical receiver shall detect the beams from several optical transmitters; the optical detection matrix shall offer at least 48 detection beams.
     - 1.5.6. Sensors shall be deployed at a minimum of three different heights to be able to count legs and to be able to defend against people trying to roll/crawl through the lane without being detected; there shall be sensors at approximately ankle height, knee height, and waist height .
   - 1.6. State control:
     - 1.6.1. The turnstile shall be bi-directional, allowing traffic in both directions. Each direction may be in one of three states:
       - 1.6.1.1. Free passage: all persons are authorized to pass under all conditions
       - 1.6.1.2. Card access: each person must present a valid security card to the card reader before being authorized to pass
       - 1.6.1.3. Lane closed: no persons are authorized to pass, and security cards are ignored
   - 1.7. Card readers:
     - 1.7.1. Design of unit shall accept card readers provided by [INSERT CARD MFGR HERE].
     - 1.7.2. There shall be space for two card readers per lane (one for each direction).
     - 1.7.3. The turnstile shall be able to accommodate a top-mounted or side-mounted card reader.
     - 1.7.4. The turnstile shall be able support any card reader that is compatible with the access control system.
     - 1.7.5. It shall be possible to shunt one card reader in a lane when the other has recently accepted a card (to prevent two people from passing through the lane in opposite directions simultaneously), provided that the card readers have Wiegand outputs wired through the turnstile's electronics.
   - 1.8. System integration:
     - 1.8.1. The design of the units shall provide a minimum of 16 dry contact inputs and 6 dry contact outputs (each selectable as either a normally open or a normally closed contact), including:

1.8.1.1. access granted input × 2, access denied input × 2
1.8.1.2. lane open input × 2, lane closed input × 2
1.8.1.3. guard authorized access input × 2
1.8.1.4. door contact output × 2, unauthorized entry output × 2
1.8.1.5. general alarm output × 1, trouble alarm output × 1
1.8.1.6. clear alarm input × 1
1.8.1.7. service mode input × 1
1.8.1.8. auxiliary input × 1

1.8.2. The design shall be able to monitor Wiegand card readers, and shall provide:
1.8.2.1. Wiegand (6-cable) card reader input × 2
1.8.2.2. Wiegand (6-cable) card reader output × 2

1.8.3. The design of the units shall provide three separate audio outputs for:
1.8.3.1. alarm buzzer (tailgating, beam blocked, etc.)
1.8.3.2. access granted buzzer
1.8.3.3. access denied buzzer

1.8.4. Each unit shall accept guard shunt inputs to permit remote release (by authorized personnel); this would typically be wired to a pushbutton at the guard desk to allow a site visitor to enter without a badge and without generating an alarm. When the input contact is closed momentarily, then released, the turnstile will open the lane for a single person to pass in one direction without presenting a badge, and will wait for many seconds (configurable by the installer) for the person to actually walk through; while the contact is held, the lane will act as if it were in free passage mode—any number of persons shall be allowed to pass without presenting an electronic ID badge.

1.8.5. Each unit shall signal the passage of a pedestrian in each direction (in/out).

1.8.6. Each unit shall signal trouble with the unit.

1.8.7. Each dry contact input shall have a corresponding LED or light source to show the status of that contact input (for debugging purposes); the LED shall turn on when the contact input is closed, and the LED shall turn off when the contact input is open

1.8.8. It shall be possible to control the turnstiles (set free passage/card access/lane closed mode, clear alarms, manually authorize access for a single person) by all of the following methods:
1.8.8.1. from the access control system (via relays)
1.8.8.2. from a desktop-mounted control panel (supplied separately by turnstile manufacturer)
1.8.8.3. from a Windows-based software package (supplied separately by turnstile manufacturer, and using a standard RS-232 serial cable)

1.8.9. It shall be possible to control “integration parameters” from dip switches within the turnstile and from a Windows-based software package (supplied separately by turnstile manufacturer, and using a standard RS-232 serial cable). Independently configurable parameters shall include:
1.8.9.1. whether the audible outputs should be a solid tone or whether they should beep several times
1.8.9.2. the rate at which the audible outputs pulse (their beeping speed)
1.8.9.3. the total length of the audible alarm, in seconds
1.8.9.4. the rate at which the end lights flash (during alarm)
1.8.9.5. the total length of the visual (flashing light) alarm
1.8.9.6. whether to infer that access has been denied if an access granted signal isn’t received in a given period of time; also, the length of time to wait
1.8.9.7. the length of time to allow a beam to be blocked before generating an alarm
1.8.9.8. whether to generate an alarm when a person partially enters the sensor array then backs out
1.8.9.9. whether to generate door contacts when a person walks through a lane in free passage mode
1.8.9.10. the length of the door contact pulses generated when people walk through

1.8.10. In particular, it shall be possible for the installer/end-user to set different timeouts for the audible and visible alarms (i.e., it shall be possible to, for each alarm, generate a two second audible tone and have the end and top lights flash for 10 seconds).

1.9. User interface:

1.9.1. Design of the unit shall feature coloured lights on the ends of the turnstiles, clearly visible by a person approaching from a distance of 50 feet, in direct sunlight. The lights shall appear on the left-hand and right-hand sides of each lane in each direction; thus, each lane will have an end light at each corner (so the guard will be able to easily identify alarms without having to stop to ponder whether the light indicates an alarm in the lane to the left or the right of the light). Lights shall use LEDs or other approved long life light source.
1.9.1.1. Yellow shall mean unit ready to accept user card.
1.9.1.2. Green shall mean acceptance of card and permission granted to proceed.

1.9.1.3. Red shall mean that the lane is closed/disabled.
1.9.1.4. Alternating red and yellow shall indicate permission denied.
1.9.1.5. Flashing red shall indicate an alarm.

1.9.2. The unit shall feature lighted pictogram indicators on the horizontal top surface of the turnstile. Lights shall use LEDs or other long-life light source.

1.9.2.1. A green arrow light shall appear when the person may walk through (i.e., when their card has been accepted, or when the lane is in free passage mode).

1.9.2.2. A red circle-and-line “do not enter” symbol shall appear when the lane is closed, and shall flash when an alarm occurs.

1.9.2.3. Each pictogram indicator shall use optical louvers; a person using a lane shall have difficulty seeing pictograms on adjacent lanes, but shall see the pictograms for their own lane clearly.

1.9.3. The unit shall clearly indicate where the card should be presented:

1.9.3.1. For card readers mounted on top of the turnstile, concealed under a Corian, granite, or other similar top surface: there shall be a 5” diameter stainless steel ring embedded in the top surface. A hand-with-card pictogram shall be engraved within the ring, and the engraved lines that form the pictogram shall be filled with brilliant white paint for easy visibility.

1.9.3.2. For card readers mounted on the side of the turnstile, a frosted or opaque plastic panel shall conceal the card readers. The plastic panel shall be flush with--and follow the form of--the side of the turnstile.

1.10. Accessibility:

1.10.1. All lanes shall comply with ADA regulations.

1.10.2. The length and the shape of the housing shall be designed to comply with ADA while maintaining a 32” lane width.

1.10.3. A separate swing gate or separate ADA-compliant entrance shall not be acceptable.

1.10.4. The turnstile shall detect and disregard guide dogs (i.e., the turnstile shall not generate an alarm when an authorized user walks through accompanied by a guide dog).

1.10.5. The turnstile shall detect and disregard wheelchairs (i.e., the turnstile shall not generate an alarm when an authorized user rolls through in a wheelchair).

1.10.6. The turnstile shall allow wheelchair users to partially enter the lane before presenting their electronic ID card, without an alarm being triggered (i.e., the user can roll into the lane, present the card, and roll through; the user doesn’t need to stay outside the lane and stretch awkwardly to present the card).

1.11. Performance and reliability:

1.11.1. Each turnstile shall provide a throughput of 35 people per minute, provided that the delay from card read to access granted signal is less than 0.5 seconds.

1.11.2. Design of the unit shall provide for the sensing of "tailgating" of detecting pedestrians walking with a minimum following distance of 6mm (1/4"). Detection of tailgating shall trigger the alarm.

1.11.3. The unit shall use no moving parts. In particular, the unit shall use no cooling fans; cooling fans fail over time, and cause cascading failures as components overheat.

1.12. Alarms:

1.12.1. Design of the unit shall feature the activation of an alarm and signal to the security system (via a relay contact closure), with automatic reset to "ready" mode after an adjustable time period. It shall be possible to have simultaneous audible and visual alarms (flashing lights) on the turnstile. It shall be possible to adjust the length of the audible alarm independently of the length of the visual alarm.

1.12.2. It shall be possible to terminate an alarm from a remote switch (mounted on the guard desk), from a desktop control panel (available separately), or from a Windows software package (available separately)

1.12.3. Design of the unit shall trigger an intermittent alarm if the lane is blocked longer than a period of time (which shall be adjustable) and cause the "do not enter" signals to flash, with adjustable duration.

1.12.4. The turnstiles shall be fault tolerant:

1.12.4.1. The turnstile shall detect and discern common objects carried by people, and will avoid generating alarms for: wheeled carry-on size suitcases (pushed in front of or pulled behind the person), briefcases, purses, book bags, canes, umbrellas, guide dogs.

1.12.4.2. The unit shall be able to detect, discern, and avoid generating alarms for common objects while still offering ¼” tailgate detection (i.e., units that can only offer a low false alarm rate when “security sensitivity” is reduced shall not be acceptable).

1.12.4.3. The turnstile shall not generate an alarm if only a single beam is broken.

1.12.4.4. The turnstile shall not shunt any sensors during the passage; all detection beams shall remain active at all times.

1.12.4.5. Unless in “service mode”, the turnstile shall not ignore sensors or objects in the detection array at any time; ignoring beam activity for a given period of time as or after a person walks

through shall not be an acceptable method of reducing false alarms due to swinging arms, purses, packages, etc.

1.12.4.6. The turnstile shall allow a person to partially enter the lane before an access granted is received without generating an alarm; it shall be possible to configure the sensitivity to persons partially entering the lane.

1.12.4.7. The turnstile shall not generate an alarm when it is bumped or otherwise pushed out of alignment.

© Siemens AG 2007

Functional safety in process instrumentation with SIL rating

Questions, examples, background

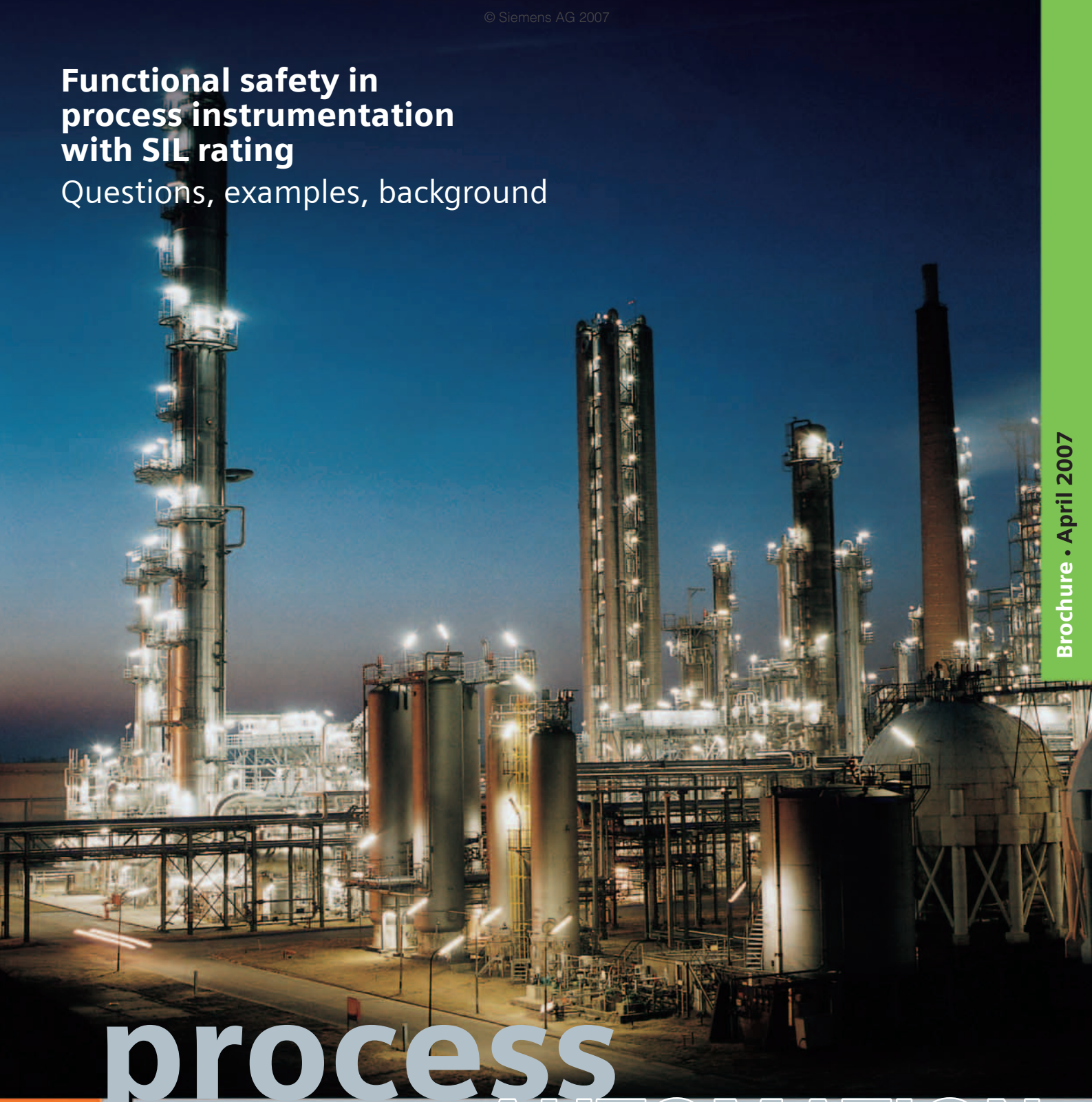

Brochure · April 2007

process AUTOMATION

SIEMENS

© Siemens AG 2007

Since the rlease of IEC 61508, the topic of "Functional safety" in the process industry has come to the fore. Often, the expression SIL is used to reference this standard. But what exactly does SIL mean?

In this brochure, we will provide you with an introduction to the topic with emphasis on instrumentation for process engineering. We want to provide fundamental understanding without using the language of the standard. As a result, some descriptions may appear to experts to be too inexact or superficial.

This brochure can only be an introduction to the topic. If you require detailed information, you must refer to the corresponding literature and the relevant standards. The calculation examples shown here must therefore only be considered as the basic procedure, and cannot be applied to "real" calculations.

The information in this brochure has been produced to the best of our knowledge. However, errors may nevertheless have slipped in. Any resulting responsibility will therefore not be accepted.

© Siemens AG 2007

Contents

Introduction 4

Functional safety 6

For whom is the IEC 61508 relevant?. 7

Safety Instrumented System (SIS) 8

Safety Integrity Level. 9

Determination of required SIL 9

Low demand and high demand modes 12

Comparison between SIL and AK 13

Who does the SIL classification apply to? 14

What devices can be used with which SIL?. 14

If two SIL 2 devices are used in redundant mode, is this automatically SIL 3? 14

Interpretation. 15

Types of faults 15

Calculation examples (random faults). 16

Testing and certification 18

Is the highest possible SIL advantageous? 18

Why is it advantageous for a company to have a plant in accordance with SIL/SIS? 18

How secure is bus communication?. 19

Device ratings by manufacturers 20

What certificates are required - and who can provide them?. 20

Possible configurations (single-channel/redundant) 21

How is the assessment carried out?. 22

New plants – old plants (protection of inventory). 22

Summary. 23

© Siemens AG 2007

Hazards and risks

In everyday life we are constantly exposed to many different hazards. The extent of these hazards extends up to major catastrophes which can have severe detrimental effects on health and the environment. We are not always able to avoid a hazard with its associated risks. For example, a high proportion of the world population lives with the hazards of earthquakes or flooding. There are no protective measures against the events themselves; however, protective measures do exist for the consequences of such events (e.g. dams or dikes, or buildings resistant to earthquakes).

Definition of a risk:

Risk = Probability of the occurrence of a hazardous event x consequences (costs) of a hazardous event

The accepted residual risk depends on the following factors:

- Region/country
- Society of the respective region/country
- Laws
- Costs

This accepted residual risk must be assessed individually. What is acceptable for one person may be unacceptable for someone else.

Reduction of risks

Every day hazards are assessed according to their risk level, and accepted or not. If someone plans a long journey, selection of the means of transport can influence the risk of an accident. The traveler can reduce the hazard to a residual risk which is acceptable for him. But there is always a residual risk.

Protective measures

We can protect ourselves by reducing the probability of the occurrence of a hazard or by limiting its effect.

Our world is being increasingly dominated by electrical and electronic systems. These systems have increased the number of potential hazards we have, but these systems can also be used to prevent or mitigate the consequences of these hazards.

A simple example:

Various protective measures can reduce the risk of damage to a building from fire.

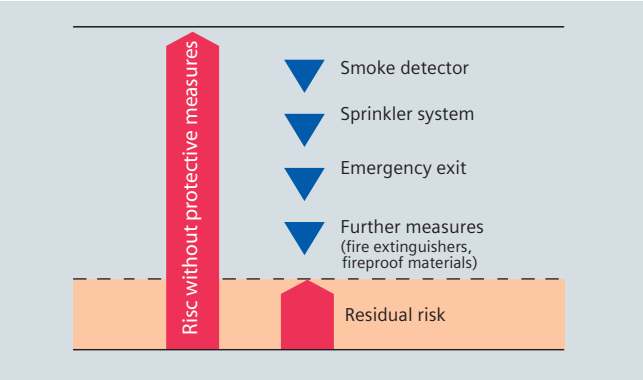

Appropriate emergency exits and escape routes can be provided when planning the building. Smoke detectors can trigger an alarm which signals the hazard to persons inside and outside the building. The installation of fire doors and the use of fireproof materials prevents further spreading of a fire.

Automatic sprinkler systems control the flames, and fire extinguishers are also available for fighting the fire. This example shows that there are many possibilities for reducing a risk. The protective measures are matched to the respective requirements, for the risks in a warehouse are different from those in home.

Protective measures in industry

The many machinery and plants in industrial use all have potential hazards. In order to protect personnel and the environment from hazard, as well as the machines and plants from damage, risks are determined and subsequently reduced by applying appropriate protective measures.

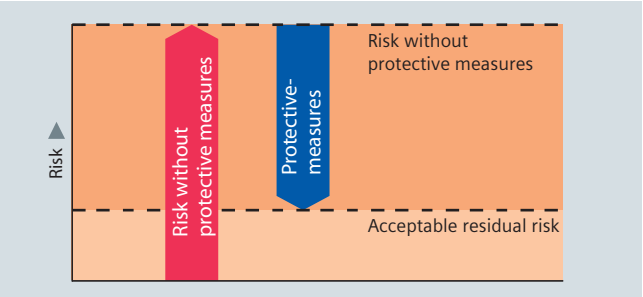

Representation of risk reduction

© Siemens AG 2007

The measures required to reduce a risk can sometimes be very simple, but also extremely complex.

Examples:

- Structural measures (e.g. build concrete walls around production plants)
- Distribution of hazard
- Evacuation plans
- Safety-relevant control and protection equipment
- ... and many more

As shown by the example, measures that decrease the risk are partially attributed to completely different approaches. These approaches are also called layers of protection. These different layers of protection are structured hierarchically and are to be viewed independently of each other. If one layer fails, the next higher layer steps in to limit or avoid damage.

The layer of protection model below shows what types of protective measures typically exist:

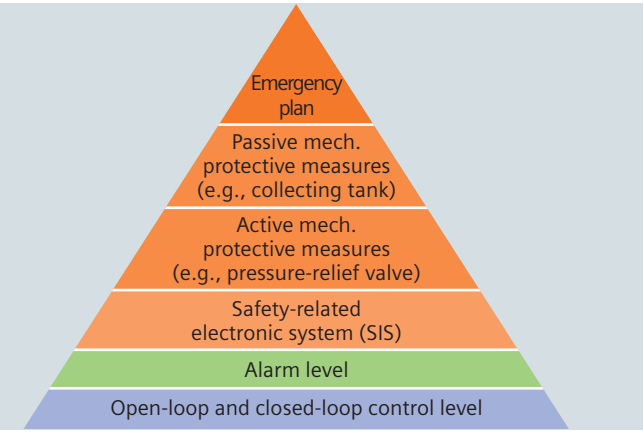

The layers of protection must be independent in their function. Thus, devices for open-loop and closed-loop control technology from the lowest level should generally not be used simultaneously for safety applications of a higher level.

Overall risk reduction results from the measures of the individual layers of protection and must result in an acceptable residual risk.

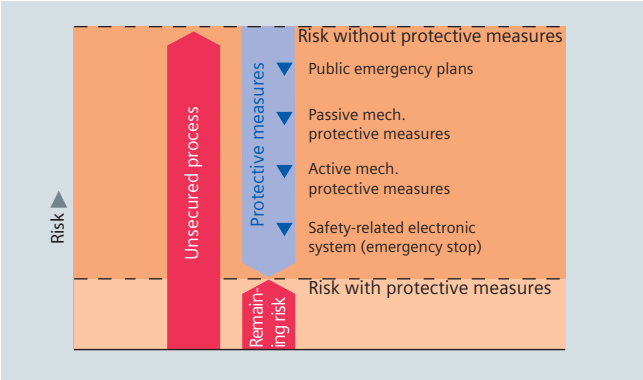

Representation of risk reduction

The measures which are finally applied frequently depend on how high the residual risk may be while still being acceptable - and what costs are necessary to achieve this. Safety-relevant control and protection equipment can make a significant contribution to reducing risks in machinery and plants.

© Siemens AG 2007

Automation engineering systems are increasingly handling safety-relevant tasks. For example, processes representing a hazard to mankind and the environment are monitored by safety systems. These access the process in the event of a fault, and can reduce the risk of a hazardous state. Functional safety is the correct functioning of such equipment.

Up to now, national standards have existed for the planning, construction and operation of safety instrumented systems. On the German market, for example, the manufacturers and owners of such plants could refer to the safety standards DIN/VDE 19250, DIN/VDE 19251 and DIN/VDE 801. The design of the safety-relevant equipment could be described using these standards and the requirement categories (AK 1-8).

Since many countries had different standards for the correct functioning of safety-relevant equipment, a globally applicable IEC basic standard for functional safety was adopted in 1998. A series of standards was derived from this, in which the organizational and technical demands placed on safety instrumented systems and their implementation were defined.

A uniform standard for plants in the process industry was adopted on August 1, 2004. The following two standards are of significance to process instrumentation:

- IEC 61508 (basic standard)
  Globally applicable as the basis for specifications, drafts and operation of safety instrumented systems (SIS).
- IEC 61511 (application-specific standard for the process industry)
  Implementation of IEC 61508 for the process industry

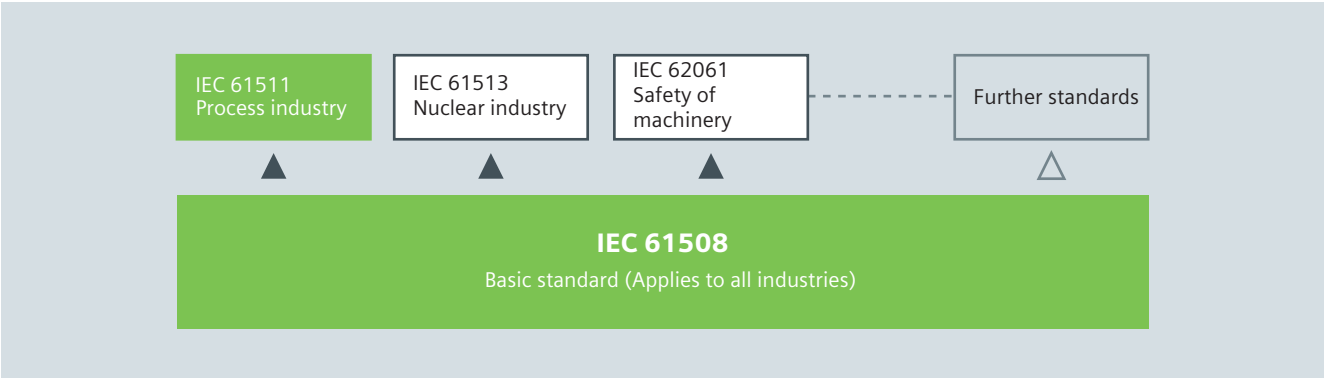

Standards used for functional safety

© Siemens AG 2007

For whom is IEC 61508 relevant?

Based on a hazard and risk analysis, all hazards can be determined which result from a plant and its associated control systems. This determines whether a SIS is necessary to guarantee appropriate protection against possible hazards. If this is the case, the associated concepts must be appropriately incorporated in the development of this plant.

A SIS is only one possibility for coping with these hazards. IEC 61508 defines appropriate methods for achieving functional safety for associated systems.

What systems are affected by IEC 61508?

IEC 61508 must be applied to safety-relevant systems if these contain one or more of the following devices:

- Electrical equipment (E)
- Electronic equipment (E)
- Programmable electronic equipment (PE)

The standard covers potential risks caused by the failure of safety functions. Not covered are hazards resulting from the E/E/PE devices themselves, e.g. electric shock. The standard is generally applicable to safety-relevant E/E/PE systems, independent of their respective application.

© Siemens AG 2007

Safety Instrumented System (SIS)

A Safety Instrumented System (SIS) is used to secure a hazardous process and to reduce the risk of an accident.

Process instruments are components of a Safety Instrumented System. This comprises the significant components of a complete safety-relevant process unit:

- Sensor
- Logic Solver
- Actuator

Components of an SIS

All units together constitute an SIS. In order to be able to evaluate the functional safety of an SIS, it is therefore necessary to consider the complete processing system (from sensor up to actuator).

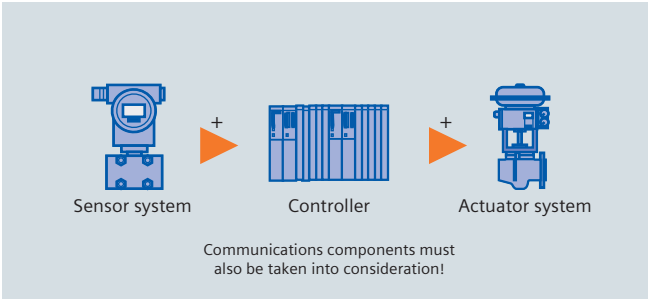

Representation of an SIS

Several sensors, actuators, or control components can be used within an SIS.

It may also be the case that safety-relevant and non-safety-relevant components are connected together within a plant. However, only the safety-relevant components are considered for the SIS.

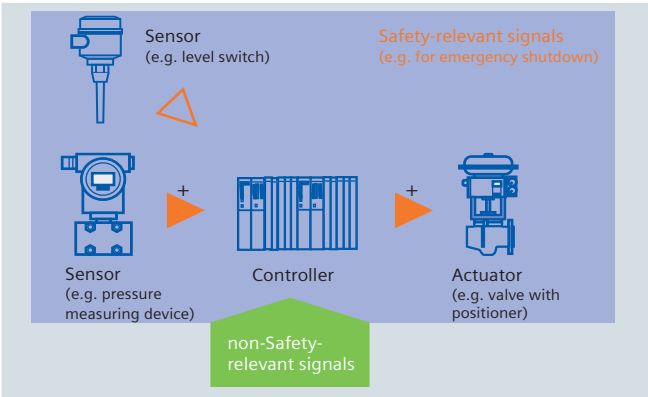

Signals to be processed in a plant

© Siemens AG 2007

Determination of required SIL

Different risks originate from plants or plant components. As the risk increases, the demands made on the Safety Instrumented System (SIS) also increase. The standards IEC 61508 and IEC 61511 therefore define four different safety levels which describe the measures for handling the risks of these components. These four safety levels are the **safety integrity level (SIL)** defined by the standards.

The higher the number of the safety integrity level (SIL), the higher the reduction of the risk. The SIL is therefore a relative measure of the probability that the safety system can correctly provide the required safety functions for a specific period.

There are different approaches for determining the required SIL of a plant or plant component. The standards IEC 61508 and IEC 61511 (application of IEC 61508 for the process industry) include various methods for defining the SIL. Since the topic is extremely complex, only that necessary to obtain basic understanding is presented here.

A quantitative method

The risk of a hazardous process is determined by the probability with which a hazardous event could occur without existing protective measures, multiplied by the effect of the hazardous event. It is necessary to determine how high the probability is which can lead to a hazardous state. This probability can be estimated by applying quantitative risk assessment methods, and defined by a numeric limit.

The probability can be determined by:

- Analysis of failure rates in comparable situations
- Data from relevant databases
- Calculation with application of appropriate prediction methods

The exact methods of calculation cannot be treated further here. If required, details can be found in IEC 61508 Part 5.

A qualitative method

The qualitative method is a simplified model which readily shows which SIL is required for which hazards.

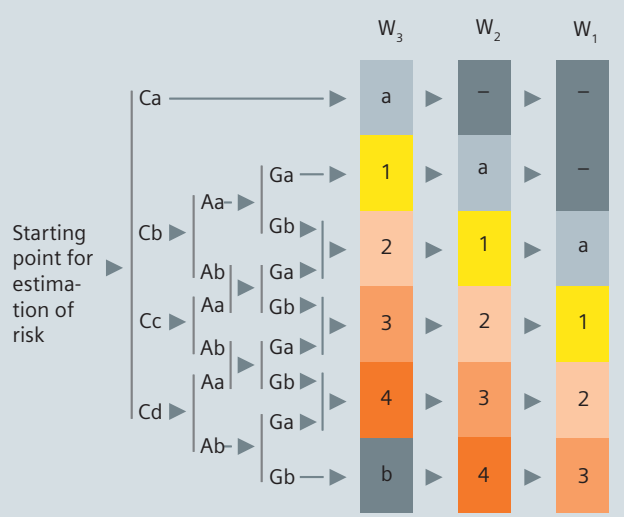

Determination of SIL according to the "qualitative method"

Extent of damage	
C_a	Light injury of a person, small environmental damage
C_b	Severe injury or death of a person
C_c	Death of several persons
C_d	Death of very many persons

Duration of stay of a person in the dangerous area	
A_a	Seldom to frequent
A_b	Frequent to permanent

Aversion of danger	
G_a	Possible under certain conditions
G_b	Hardly possible

Probability of occurrence	
W_1	Very low
W_2	Low
W_3	Relatively high

© Siemens AG 2007

A small example...

A new production facility needs to be build in a chemical plant.

The process used to produce the chemical product is the main factor determining the configuration of the facility. Since the operation of this type of facility can generally pose a risk to people and the environment, potentials risks and effects must be examined and adequate protective measures must be included in the project if necessary. For example, a separation column is considered as part of the plant.

A HAZOP analysis (Hazard and Operability Study) is created to assess the safety risks that can be mitigated by the operation of a separation column. The examination is compiled by various experts such as process technicians, production engineers, occupational health and safety experts, technicians, operating personnel, plant management, etc. in order to consider many different aspects of the safety risk of the facility. The various points of view are used to create a risk analysis (fault examination), which is in turn used to determine the protection or countermeasures that are needed.

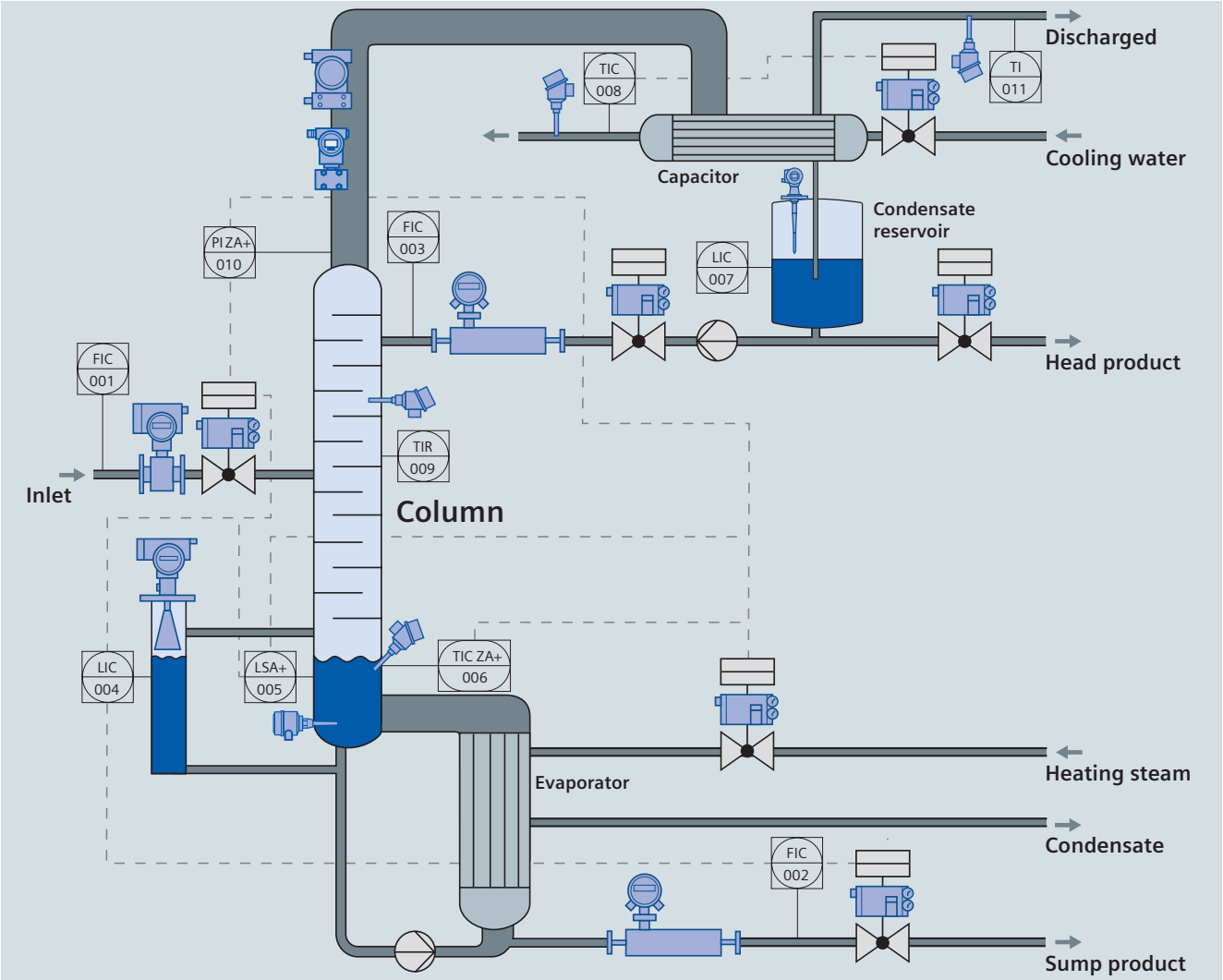

Diagram of the separation column

© Siemens AG 2007

The risk analysis results in a fault examination, part of which is shown here:

No.	Fault	Cause(s)	Effect(s)	Countermeasures(s)
1	Wrong or contaminated input products into the column	Change in the mixture composition of the inflow from upstream parts of the plant	Temperature/pressure increase in the column	• Changes in the inflow composition do not take place suddenly but are instead gradual and are noted by the continuous quality analyses.
2	Power failure	Local or plant-side electrical defect	Breakdown of cooling and heating as well as the pumps and/or pressure and temperature increase	• All controls and instruments enter the safety mode. • The column automatically enters the safety mode (when heating is switched off and the infeed is closed).
3	Overfilling in the column sump	Failure of the fill level control LIC 004	Flooding of the lower column floors with the risk of destroying the floors	• Overfill safety LSA+ 005 closes heating steam and inflow valve
4	Overfilling of the condensate reservoir	Failure of the fill level control LIC 007	Flooding of the capacitor and loss of cooling power, temperature increase in the column	• See Temperature in the column too high
5	Temperature in the column too high	Loss of cooling water on the head capacitor	Pressure increase and penetration of the lower boiler steam into the discharged air, Instance A) With safety valve: Activation of the safety valve and substance release into the environment Instance B) Without safety valve: Exceeding of the maximum permissible pressure in the column with loss of integrity	• Pressure monitoring PI ZA+ 010 closes heating steam and inflow valves • Many temperature measurement points for the quick response of operating personnel in the case of an abnormal temperature increase.
6	Temperature in sump too high	Control errors in the heating steam supply line	Overheating of the sump product above the maximum permissible temperature, corrosion reaction with gas production, pressure increase above the maximum permissible storage pressure	• Temperature monitoring TIC ZA+ 006 closes heating steam

The measuring points "pressure monitoring at the column head" (010) and "temperature monitoring at the column floor" (006) were identified as being safety-relevant. The existence of a safety valve for pressure monitoring was emphasized in particular.

In connection with the diagram for determining the required SIL level on page 9, the corresponding classifications result for pressure and temperature monitoring in the separation column.

	Pressure monitoring		Temperature
	with safety valve	without safety valve	
Extent of damage	C_b	C_c	C_c
Length of stay in the hazard zone	A_b	A_b	A_b
Potential for aversion of hazard	G_b	G_b	G_b
Probability of event occurrence	W2	W2	W1
Safety Integrity Level	**SIL 2**	**SIL 3**	**SIL 2**

© Siemens AG 2007

Low demand and high demand modes

Since applications in the process and production industries vary greatly, different demands are also placed on the SIS. For this reason, each of these industrial sectors has a different system in which the demand rate on the SIS is defined. A differentiation is made between the systems using the probability of SIS failure on demand (PFD).

Low demand

Mode with low demand rate on the safety system. There must not be a demand on the safety system more frequently than once per year.

SIL	PFD	Max. accepted failure of SIS
SIL 1	$\geq 10^{-2}$ to $< 10^{-1}$	One hazardous failure in 10 years
SIL 2	$\geq 10^{-3}$ to $< 10^{-2}$	One hazardous failure in 100 years
SIL 3	$\geq 10^{-4}$ to $< 10^{-3}$	One hazardous failure in 1000 years
SIL 4	$\geq 10^{-5}$ to $< 10^{-4}$	One hazardous failure in 10000 years

Failure limits for a safety function used in low demand mode

High demand

Mode with high demand rate or continuous demand on the safety system. The safety system works continuously or has a demand more frequently than once per year.

SIL	PFH (per hour)	Max. accepted failure of SIS
SIL 1	$\geq 10^{-6}$ to $< 10^{-5}$	One hazardous failure in 100000 hours
SIL 2	$\geq 10^{-7}$ to $< 10^{-6}$	One hazardous failure in 1000000 hours
SIL 3	$\geq 10^{-8}$ to $< 10^{-7}$	One hazardous failure in 10000000 hours
SIL 4	$\geq 10^{-9}$ to $< 10^{-8}$	One hazardous failure in 100000000 hours

Failure limits for a safety function used in high demand mode

High demand mode (continuous mode) is mainly used in production engineering. Continuous monitoring of working processes is frequently required here to guarantee the safety of mankind and the environment.

Low demand mode (on demand) is typically found in the process industry. A typical example is an emergency shutdown system which only becomes active when the process becomes out of control. This normally occurs less than once a year. For this reason, high demand mode is usually of no significance for process instrumentation in most cases.

The considerations in this brochure therefore apply exclusively to low demand systems.

© Siemens AG 2007

Comparison between SIL and AK

DIN 19250/19251 and DIN 0801 were German industry standards and were used as the basis for the evaluation of safe products before the international standard IEC 61508 was introduced.

DIN 19250 defined requirement categories (AK) instead of the safety integrity levels (SIL1 - 4) of the new international standard IEC61508.

The basic principle for application of the requirement categories (AK) is based on the fact that, through the exclusive use of devices of a particular requirement category, the total system also fulfills this requirement category. In addition, only the computer components of an SIS have been considered.

Two considerations are made for the application with SIL:

1. **Examination of the systemic faults**
   As with application of AK, it also applies here that the SIL-capability of all important components also results in fulfillment of the SIL rating for the complete system.
2. **Examination of the random failures**
   The entire SIS is calculated here. It may occur here, for example, that the demands are not fulfilled despite all devices being rated at a given SIL capability.

SIL

The SIS is examined in its entirety. The failure probability, and thus the SIL level, must be calculated. To this end, the individual failure probabilities of all components of the SIS are included in the calculation. It may therefore occur that, despite exclusive use of SIL 2 components, the SIL 2 level is not achieved in a SIS! The systematic failures of the entire SIS must also be taken into consideration.

AK

Only the computer components in a SIS are considered. For example, in order to design a plant in compliance with AK4, all corresponding components must at least also correspond to AK4.

The following table shows a comparison between the requirement categories AK and the safety integrity levels.

DIN 19250 Requirement category	IEC 61508 Safety integrity level
AK 1	Not defined
AK 2 AK 3	SIL 1
AK 4	SIL 2
AK 5 AK 6	SIL 3
AK 7 AK 8	SIL 4

Comparison between AK (DIN 19250) and SIL (IEC 61508) (may not completely agree in a few cases)

© Siemens AG 2007

Who does the SIL classification apply to?

In the case of plants that must meet safety technology requirements, the participants are affected for different reasons:

- **Plant operators**
  Place the demands on the suppliers of safety technology components. These must provide proof of the remaining risk potential.
- **Plant constructors**
  Must appropriately design the plant.
- **Suppliers**
  Confirm the classification of their products.
- **Insurance companies, authorities**
  Request proof of a sufficient reduction in the residual risk of the plant.

What devices can be used with which SIL?

In order to achieve a level (SIL 1 - 4), the complete SIS must fulfill the demands for the systematic failures (particularly the software) and the random failures (hardware). The calculated results of the complete SIS must then correspond to the target SIL.

In practice, this primarily depends on the design of the plant or measuring circuit. In an SIL 3 plant, for example, devices with a lower SIL can also be used within certain limits.

For safety reasons, it is more advantageous if at least two redundant devices are used. A small positive side-effect is that the cost of two SIL 2 devices is usually lower than that of one SIL 3 device.

SIL 4 cannot be implemented using conventional devices.

If two SIL 2 devices are used in redundant mode, is this automatically SIL 3?

No. It is always the case that the calculated failure probability of the complete SIS must result in SIL 3. Redundant operation of SIL 2 devices permits a reduction in the probability for random failures. Whether this is sufficient for SIL 3 must be determined by considering systematic and random failures. In terms of systematic failures (e. g. software), the entire system must also meet the requirements for SIL 3.

This procedure applies analogously to other SIL levels.

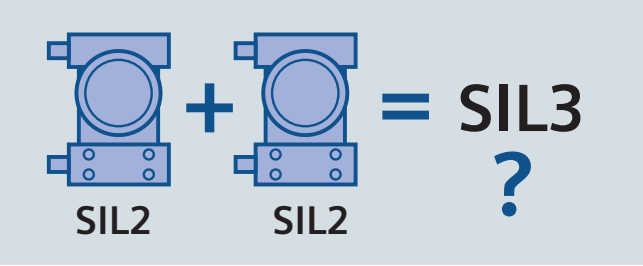

© Siemens AG 2007

Types of faults

A differentiation is made in a safety instrumented system between systematic faults and **random** faults. **Both types of faults must be considered individually in order to fulfill a demanded SIL level.**

Random faults

Random faults do not exist at the time of delivery. They result from failure of individual components of the hardware, and occur at random during operation. Examples of random faults include: Short-circuit, interruption, drift in component values, etc. The fault probability and the associated failure probability can be calculated. The individual hardware components of an SIS are calculated. The results are expressed by the PFD value (average probability of failure on demand), and are the calculation basis for determining the SIL value.

Systematic faults

Systematic faults already exist at the time of delivery of every device. These are typically development faults or faults in the design or configuration. Examples include software faults, incorrect dimensioning, incorrect rating of measuring device, etc. Faults in the device software make the largest contribution to the systematic faults. The fundamental consideration with systematic software faults is that faults in the programming can also result in faults in the process.

Common cause faults

Common cause faults of the hardware can be caused by external factors, such as electromagnetic interference (EMC) or other environmental factors, such as temperature or mechanical load. They have a simultaneous effect on multiple components of a "safety instrumented system".

When using devices in a redundant configuration, systematic faults are common cause. As a result, special measures must be used to avoid systematic faults during development. This includes, for example, qualitative requirements of the IEC standard for the development process, the change process, and the HW/SW architecture of the device.

The device manufacturer must provide data on the SIL rating with respect to systematic faults. This information is usually present in the conformity certificate of the individual devices. This information can be supported by certificates produced by independent organizations such as the TÜV (German Technical Inspectorate) or companies specialized in testing such as exida.

This rating is not part of quantitative calculations, but only provide information on the SIL rating of the device with respect to systematic faults.

In order to fulfill the systematic fault requirements for a certain SIL (e.g. SIL 3), the complete SIS must be appropriately designed. The simplest consideration in this case is that all components possess an SIL 3 rating for systematic faults.

Complete redundancy with systematic faults

It is also possible to use SIL 2 components if measures have been taken which do not allow a systematic fault at the SIL 2 level. For example, if SIL 2 pressure measuring devices are to be used in an SIL-3-SIS, it must be ensured that different device software is used. This is achieved e.g. by using two different devices, best of all from different manufacturers (complete redundancy, also see the figure on page 21). Complete redundancy can also apply if different technologies are used instead of different devices (if meaningful), for example with a pressure measuring device and a temperature measuring device.

© Siemens AG 2007

Calculation examples (random faults)

Calculation of an SIS with an SIL 2 sensor

Prevailing values:

PFD sensor A	$1.5 * 10^{-3}$	(suitable for SIL 2)
PFD controller	$1.3 * 10^{-4}$	(suitable for SIL 3)
PFD actuator	$7.5 * 10^{-4}$	(suitable for SIL 3)

Example of a 1oo1 Sensor

(1 unit of 1 available unit required for functioning)

Sensor A SIL 2 ▶ Controller (e.g. PLC) SIL 3 ▶ Actuator SIL 3

$PFD_{Sys} = PFD_S + PFD_L + PFD_A$

$PFD_{Sys} = 1.5*10^{-3} + 1.3*10^{-4} + 7.5*10^{-4}$

$PFD_{Sys} = 2.38*10^{-3}$ (SIL 2)

By using these components, the SIS achieves the PFD for SIL 2.

SIL	PFD
SIL 1	$\geq 10^{-2}$ to $< 10^{-1}$
SIL 2	$\geq 10^{-3}$ to $< 10^{-2}$
SIL 3	$\geq 10^{-4}$ to $< 10^{-3}$
SIL 4	$\geq 10^{-5}$ to $< 10^{-4}$

Calculation of an SIS exclusively with SIL 3 components

Prevailing values:

PFD sensor B	$6.09 * 10^{-4}$	(suitable for SIL 3)
PFD controller	$1.3 * 10^{-4}$	(suitable for SIL 3)
PFD actuator	$5.0 * 10^{-4}$	(suitable for SIL 3)

Example of a 1oo1 Sensor

(1 unit of 1 available unit required for functioning)

Sensor B SIL 3 ▶ Controller (e.g. PLC) SIL 3 ▶ Actuator SIL 3

$PFD_{Sys} = PFD_S + PFD_L + PFD_A$

$PFD_{Sys} = 6.09*10^{-4} + 1.3*10^{-4} + 5.0*10^{-4}$

$PFD_{Sys} = 1.24*10^{-3}$ (SIL 2)

By using these components, the SIS achieves the PFD for SIL 2.

This example clearly shows that the SIS does not achieve the PFD for SIL 3 despite the exclusive use of SIL 3 components.

SIL	PFD
SIL 1	$\geq 10^{-2}$ to $< 10^{-1}$
SIL 2	$\geq 10^{-3}$ to $< 10^{-2}$
SIL 3	$\geq 10^{-4}$ to $< 10^{-3}$
SIL 4	$\geq 10^{-5}$ to $< 10^{-4}$

Important note:
The calculations shown refer exclusively to random faults! Whether an SIS actually fulfills the demands of the required SIL must additionally be checked with respect to the systematic faults.

Comment:

The examples shown here are presented very simply, and only to provide basic understanding. These examples cannot be applied to an exact calculation!

The following abbreviations are used in the calculation examples:

Abbreviation	Explanation
PFD	Mean failure probability of function for the demand
PFD_{Sys}	Failure probability of the system (the complete SIS)
PFD_S	Failure probability of sensor
PFD_L	Failure probability of logic components/controller
PFD_A	Failure probability of actuator

© Siemens AG 2007

Calculation of an SIS with redundant sensors

Prevailing values:

PFD sensor A	$1.5 * 10^{-3}$	(suitable for SIL 2)
PFD sensor A	$1.5 * 10^{-3}$	(suitable for SIL 2)

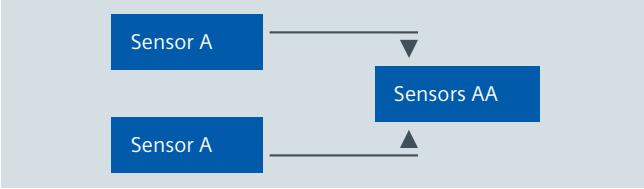

$PFD_S = 1.52*10^{-4}$

Determination of the PFD value for the redundant connection of the two sensors is too complex to be presented here understandably. The value can vary greatly, for example if different technologies, manufacturers or device designs are used.

PFD sensor AA	$1.52 * 10^{-4}$	(suitable for SIL 3)
PFD controller	$1.3 * 10^{-4}$	(suitable for SIL 3)
PFD actuator	$6.8 * 10^{-4}$	(suitable for SIL 3)

Example of a 1oo2 Sensor

(1 unit of 2 available units required for functioning)

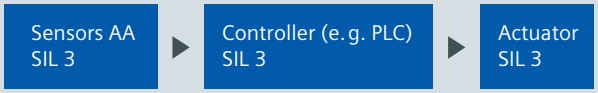

$PFD_{Sys} = PFD_S + PFD_L + PFD_A$

$PFD_{Sys} = 1.52*10^{-4} + 1.3*10^{-4} + 6.8*10^{-4}$

$PFD_{Sys} = 9.62*10^{-4}$ (SIL 3)

By using these components, the SIS achieves the PFD for SIL 3.

This example clearly shows that the complete SIS achieves the PFD for SIL 3 despite the use of SIL 2 components.

SIL	PFD
SIL 1	$\geq 10^{-2}$ to $< 10^{-1}$
SIL 2	$\geq 10^{-3}$ to $< 10^{-2}$
SIL 3	$\geq 10^{-4}$ to $< 10^{-3}$
SIL 4	$\geq 10^{-5}$ to $< 10^{-4}$

Calculation of an SIS with redundant sensors (poorer actuator value)

Prevailing values:

PFD sensor A	$1.5 * 10^{-3}$	(suitable for SIL 2)
PFD sensor A	$1.5 * 10^{-3}$	(suitable for SIL 2)

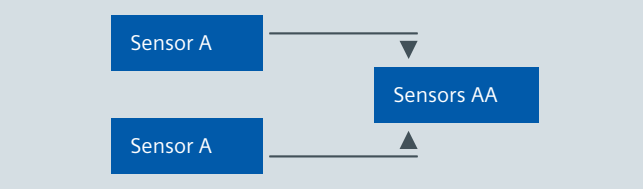

$PFD_S = 1.52*10^{-4}$

Determination of the PFD value for the redundant connection of the two sensors is too complex to be presented here in a comprehensible manner. The value can vary greatly, for example if different technologies, manufacturers or device designs are used.

PFD sensor AA	$1.52 * 10^{-4}$	(suitable for SIL 3)
PFD controller	$1.3 * 10^{-4}$	(suitable for SIL 3)
PFD actuator	$7.5 * 10^{-4}$	(suitable for SIL 3)

Example of a 1oo2 Sensor

(1 unit of 2 available units required for functioning)

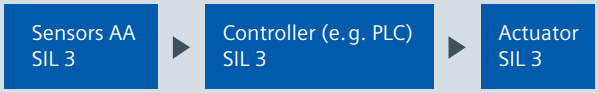

$PFD_{Sys} = PFD_S + PFD_L + PFD_A$

$PFD_{Sys} = 1.52*10^{-4} + 1.3*10^{-4} + 7.5*10^{-4}$

$PFD_{Sys} = 1.03*10^{-3}$ (SIL 2)

By using these components, the SIS achieves the PFD for SIL 2.

This example clearly shows that the SIS does not achieve the PFD for SIL 3 despite the use of redundant SIL 2 sensors.

SIL	PFD
SIL 1	$\geq 10^{-2}$ to $< 10^{-1}$
SIL 2	$\geq 10^{-3}$ to $< 10^{-2}$
SIL 3	$\geq 10^{-4}$ to $< 10^{-3}$
SIL 4	$\geq 10^{-5}$ to $< 10^{-4}$

© Siemens AG 2007

Is the highest possible SIL advantageous?

Companies operating plants are responsible for proving the functional safety of their plant. They are frequently unsure whether a high or low SIL should be achieved for their plant. The demand for a certain SIL results from determination of the residual risk exhibited by the plant. The lowest possible SIL should always be striven for. This not only results in significant cost advantages, but also permits a far greater selection of devices.

A high SIL is only striven for if it is unavoidable or if cost advantages then result elsewhere, permitting saving again of the extra costs (e.g. by saving expensive additional construction measures).

Why is it advantageous for a company to have a plant in accordance with IEC 61508/61511?

These standards also provide a common base for manufacturers and users to monitor the effectiveness of the development processes. When users choose safe devices to achieve the intended SIL for their plants, they can be sure that uniform methods were used in development.

It is then easier for the company operating the plant to provide the proof for risk reduction required by law. This can be required to achieve operating approval for the plant. It is not absolutely essential to use SIL-classified products, however, the demonstrating compliance is greatly simplified since the residual risk is already known (and unambiguous) for these products.

© Siemens AG 2007

How secure is bus communication?

A clear trend can be observed in the process industry: more and more data is transferred between the components. This occurs by means of various protocols, such as HART, PROFIBUS or Foundation Fieldbus - either with digital signals modulated up to the analog 4 through 20 mA signal or by means of bus communication with a fieldbus.

Due to the variety of possible errors, such as electromagnetic interference (EMC) and the complexity of the bus system, the data transfer in conventional bus systems is not inherently reliable.

Special software algorithms that can ensure reliable transfer are thus required for safe data communication via a bus or fieldbus. The only protocol that currently fulfills these requirements is PROFIBUS with a PROFIsafe profile. PROFIsafe has long since proven itself for safety-relevant applications in the production industry. In the process industry, PROFIsafe is becoming increasingly important with the continuously growing number of available field devices and also contributes to the use of the advantages of the fieldbus technology in safety-relevant systems.

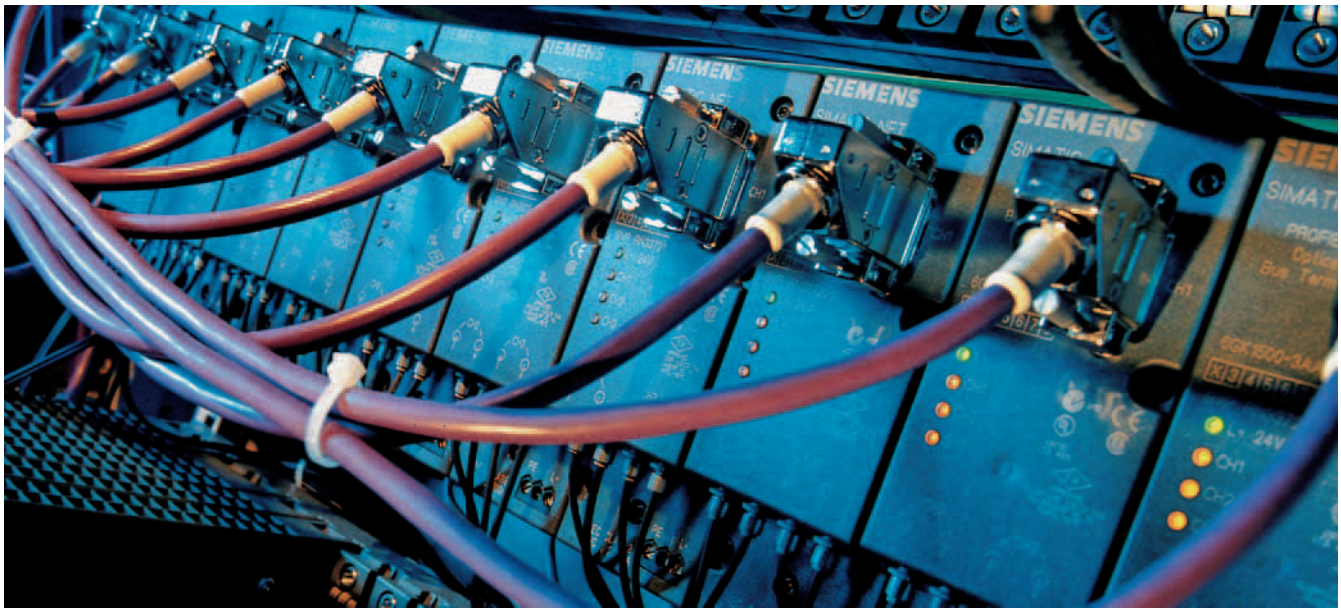

© Siemens AG 2007

Device ratings by manufacturers

Rating in accordance with IEC 61508

The definitions of IEC 61508 cover the complete product life-cycle from initial concept up to discontinuation of a product. In order to develop a component according to this standard, appropriate procedures and additional technical measures must be taken and verified from development through production. This often makes the development of a failsafe product more expensive than that of a standard component without SIL certification.

Rating in accordance with IEC 61511 (operational proof)

At the moment there are a limited number of devices which have been certified in accordance with the IEC61508 standard. In order to allow a practicable selection of devices, the possibility of operational proof for devices has been permitted in IEC 61511. In practice, the older devices have been used successfully for many years. Therefore a statement on the functional safety can be provided by considering failure statistics under certain conditions. The objective is to determine within a reasonable doubt whether the required functional safety is also actually provided. Evidence must be provided to show a sufficient number of units in the field, and include data on the operating period and conditions of use. The minimum period of use is 1 year and additionally a specified number of operating hours. The operational proof only applies to the version/release of the product for which the proof has been provided. All future modifications of the product must subsequently be carried out in accordance with IEC 61508.

What certificates are required - and who can provide them?

The plant operators require proof of the SIL classification of the components used by the SIS. According to IEC 61511, manufacturer declarations are entirely sufficient. Certificates are neither stipulated by law nor required by the standard.

In order to be able to issue a manufacturer declaration or a certificate, a technical assessment of the safety components used is required. This assessment is often performed by an independent organization such as TÜV or exida. The manufacturer can issue a manufacturer declaration after a successful assessment and can also refer to the test report of the assessment.

In contrast to manufacturer declarations, certificates can only be issued by an accredited organization (e.g. TÜV).

SIL 1	Independent person
SIL 2	Independent department
SIL 3	Independent organization
SIL 4	Independent organization

Overview, which instance assesses

The higher the safety required for a plant, the more independent the person must be who carries out judgment of the functional safety.

Declaration of conformity (manufacturer's declaration)	The manufacturer certifies that a particular SIL level has been achieved according to his tests and calculations or as a result of operational proof. The tests are often carried out by a testing authority such as exida or TÜV.
Certificate	Is issued by an independent, accredited organization (e.g. TÜV).

Overview of possible certificates

© Siemens AG 2007

Possible configurations (single-channel/redundant)

Single-channel configuration One single device	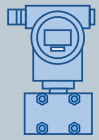
Redundant, two-channel configuration Two devices of same type	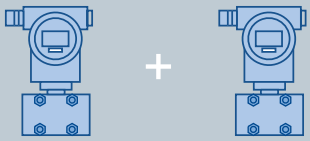
Completely redundant configuration Two different devices (measure to ensure that systematic faults cannot occur simultaneously)	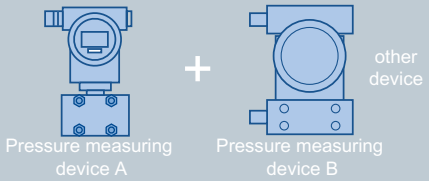
Two different technologies	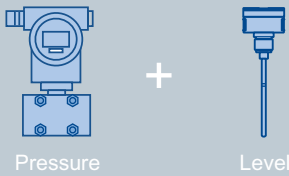

© Siemens AG 2007

How is the assessment carried out?

The following elements can be assessed:

- The complete device
- Random faults (only hardware)
- Systematic faults (hardware and software)

New plants – old plants (protection of inventory)

Inventory protection applies to existing plants. However, this means that, with plant conversions or expansions, the newly added parts will be assessed according to the new standards.

© Siemens AG 2007

Important statements concerning the topic of SIL are summarized again below:

- The device supplier has no influence on the SIL rating of the plant.
- In order to assess whether a Safety Instrumented System (SIS) complies with a required SIL, it is **always** necessary to calculate the failure probability of the random faults.
- In the end, the **value of the failure probability** of the used components is therefore of significance to the company operating the plant. The SIL rating of the device can therefore frequently only be used as an approximate value for the calculation.
- In addition, the processing system must satisfy the systematic fault prevention requirements.
- The statement on the SIL rating of a device only means that it is basically suitable for use in a plant with a corresponding SIL rating.
- The standard requires **assessment** of the functional safety. **Certificates are neither required by the standard nor stipulated by law.**
- The application standard IEC 61511 applies to the process industry.

© Siemens AG 2007

Further information can be found on the Internet

www.siemens.com/sil

www.siemens.com/safety

www.siemens.com/processanalytics

www.siemens.com/processsafety

www.siemens.com/processinstrumentation

Subject to change without prior notice | Order No. E86060-A6200-A101-A3-7600 | Dispo 09511 | KB 0407 2. ROT 24 EN / 715053 | Printed in Germany | © Siemens AG 2007

Siemens AG

Automation and Drives
Sensors and Communication
P.O. Box 48 48
D-76181 KARLSRUHE
GERMANY

www.siemens.com/processinstrumentation

The information provided in this brochure contains merely general descriptions or performance characteristics, which in case of actual use do not always apply as described or which may change as a result of further development of the products. An obligation to provide the respective characteristics shall exist only if expressly agreed in the terms of contract. Availability and technical specifications are subject to change without prior notice.

All product designations may be trademarks or product names of Siemens AG or supplier companies whose use by third parties for their own purposes could violate the rights of the owners.

TagMaster

North America, Inc.

HW INSTALLATION GUIDE

MANUAL ISSUE 04
DOC NO. 510278

Copyright
The copyright/ownership of this document is and will remain ours. The document must not be used without our authorization or brought to the knowledge of a third party. TagMaster AB.

Disclaimer
The information in this document is subject to change without notice. While the information contained herein is assumed to be accurate, TagMaster AB assumes no responsibility for any errors or omissions.

FCC ID: M39S15XX

This device complies with part 15 of the FCC Rules. Operation is subject to the following two conditions:
(1) This device may not cause harmful interference, and
(2) This device must accept any interference received, including interference that may cause undesired operation.

NOTE: This equipment has been tested and found to comply with the limits for a Class A digital device, pursuant to part 15 of the FCC Rules. These limits are designed to provide reasonable protection against harmful interference when the equipment is operated in a commercial environment. This equipment generates, uses, and can radiate radio frequency energy and, if not installed and used in accordance with the instruction manual, may cause harmful interference to radio communications. Operation of this equipment in a residential area is likely to cause harmful interference in which case the user will be required to correct the interference at his own expense.

Caution

Information to user.
Changes or modifications not expressly approved by the party responsible for compliance could void the user’s authority to operate the equipment.

TABLE OF CONTENTS

1 ABOUT THIS DOCUMENT 5
1.1 Introduction 5
1.2 Audience 5
1.3 Definitions 5
1.4 References 6
1.5 Revisions 6
2 SAFETY INSTRUCTIONS 7
2.1 General 7
2.2 Installation 7
3 SYSTEM COMPONENTS 9
3.1 Readers 9
3.2 ID Tags 9
4 ENVIRONMENTAL CONSIDERATIONS 10
4.1 General 10
4.2 Electromagnetic immunity 10
4.3 Temperature 10
4.3.1 Readers 10
4.3.2 Tags 10
5 MECHANICAL INSTALLATION 11
5.1 General 11
5.2 Readers 11
5.2.1 Mounting 11
5.2.2 Cables 11
5.3 ID-Tags 11
5.4 Accessories 12
5.5 Typical installations 13
5.5.1 Single lane identification 13
5.5.2 Multi lane identification 13
5.5.3 How to handle and mount the tag 13
6 ELECTRICAL INSTALLATION 14
6.1 General 14
6.2 Connection diagrams 16
6.2.1 Single Communicator connection using port A for RS232C 16
6.2.2 Single Communicator connection using port B for RS232C 16
6.2.3 Direct Communicator multipoint connection using port B for 2-Wire RS485 17
6.2.4 Digital I/O connections (example) 18
6.2.5 Power supply connection 19
6.3 Hardware adaptation 19
6.3.1 Jumper connections 19
6.3.2 Adaptation of the S1500 or S1503 to 12 VDC power supply 19
7 CABLES 20
7.1 Power supply 20
7.2 Digital I/O and DTMF 20
7.3 RS232 20
7.4 RS485 20
7.4.1 2-Wires interface 20
7.4.2 4-Wires interface 20
8 START-UP 21

8.1 General 21
8.2 Inspection 21
8.3 Verifying communication 21
8.3.1 Serial host communication 21
8.3.2 Communicator - Tag communication 21
8.3.3 Digital I/O - communication with external devices 22

9 TROUBLE SHOOTING 23
9.1 An S1500/S1503 communicator seems not to read Tags 23
9.2 Unsuitable interface converters 23
9.3 Interference 23
9.4 Using wrong address 23
9.5 Forgetting the free-wheel diode across inductive loads 23
9.6 Using different data speed in the Tag(s) and in the Communicator(s). 23
9.7 Using an unsuitable power supply 24

1 ABOUT THIS DOCUMENT

1.1 Introduction

The basic elements of a TagMaster identification system are the electronic ID-Tags (e.g. S1251), the Reader/Communicator (e.g. S1500), and possibly a host computer.

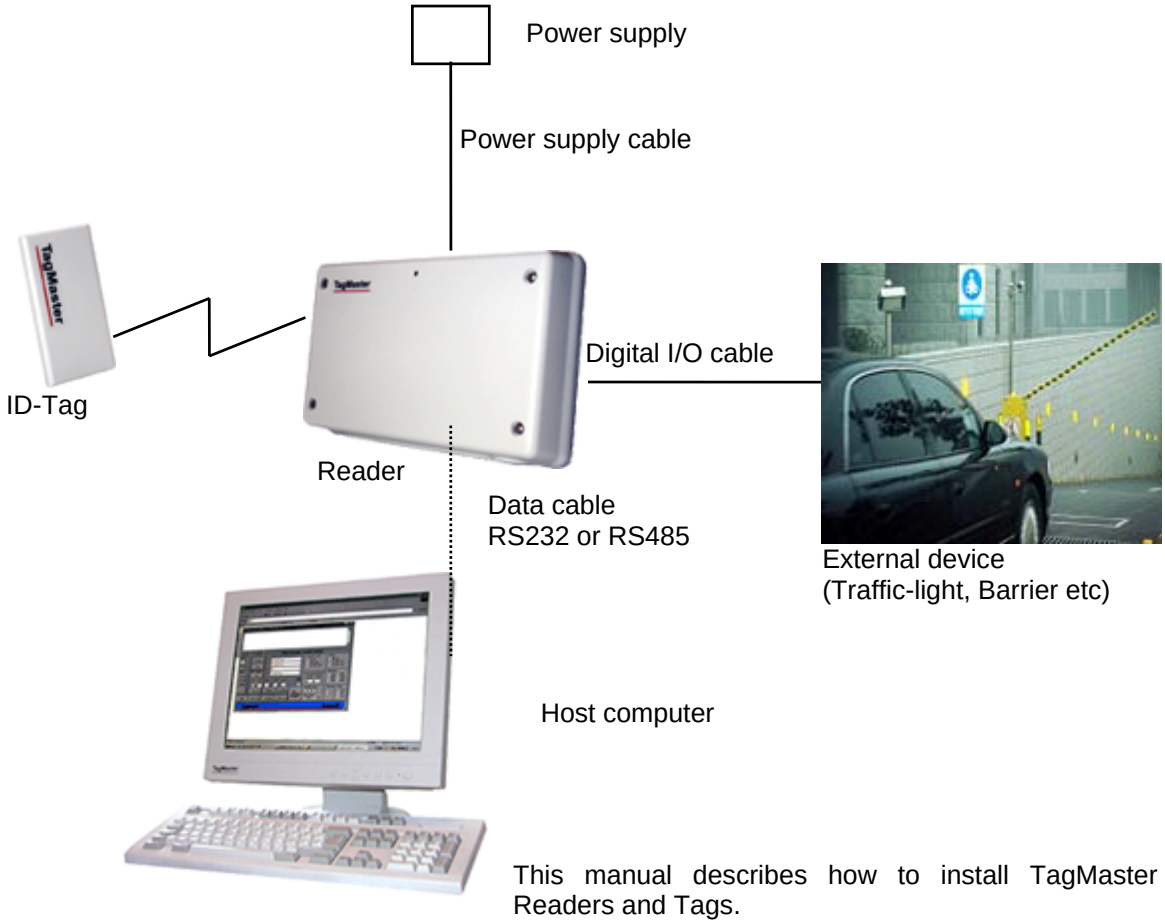

This manual describes how to install TagMaster Readers and Tags.

1.2 Audience

The intended audience for this document is system integrators, installation engineers, contractors or the like who have the task to install and commission TagMaster identification systems. The audience is expected to have adequate experience and education in the field of installation and commissioning of control and identification systems and to be qualified for electrical installations.

1.3 Definitions

Communicator Device (e.g. S1500) used to read and write Tags in the TagMaster system.

ConfiLib The TagMaster Library Software (ConfiLib) is the uniting name of the device drivers that are included in all S1500/S1501/host C-language software modules.

ConfiTalk Standard communication protocol. Used by Pyramid and Solid. Included in ConfiLib.

Host IBM PC or compatible used as master computer in a TagMaster system.

Pyramid Pyramid is the *S1500* standard software delivered from factory. S1500 with Pyramid is capable of taking decisions on its own when a Tag has been read or when a movement has been detected. Refer to the S1500 datasheet for further details.

Solid Solid is the *S1501* and S1566 standard software delivered from factory. This software receives ConfiTalk commands on the serial port and executes them. This is the same as the ConfiTalk only mode of the S1500.

Tag ID-carrier (e.g. *ScriptTag S1251*) in the TagMaster system, which is read/writable via, microwaves, using a Communicator.

1.4 References

Communicator S1500&S1501 data sheet	DS1500
Communicator S1503 data sheet	DS1503
ScriptTag S1251 data sheet	DS1251
ScriptTag HD S1450 data sheet	DS1450
ScriptTag HT S1350 data sheet	DS1350
MarkTag S1255 data sheet	DS1255
MarkTag HD S1455 data sheet	DS1455
Card holder WinFix S1951 data sheet	DS1951
Card holder CardKeep S1953 data sheet	DS1953
Mounting bracket S1952 data sheet	DS1952
RS232/RS485 converter S1942	DS1942
TagMaster Programmer's Guide	510211

1.5 Revisions

Issue	Date	Description
01	971211	First issue
02	980623	Second issue
03	030506	Third issue
04	040916	New layout
04	041207	Minor corrections

2 SAFETY INSTRUCTIONS

This chapter gives an overview of necessary safety precautions for the TagMaster system.

2.1 General

This Installation Manual shall be carefully read before any installation works is performed. Special attention shall be paid to this page and the statements in boxes throughout the manual.

The contents of this document are not binding. If any significant difference is found between the product and this document, please contact TagMaster AB for further information

We reserve the right to modify products without amending this document or advising the user.

We recommend using personnel authorised by TagMaster for all installation, service and repair and the use of TagMaster genuine spare parts. TagMaster AB will not otherwise assume responsibility for the materials used, the work performed or any consequences of the same.

Check the contents of the shipment for completeness and possible damage. If the contents are incomplete or damaged, a claim should be filed with the carrier immediately and the TagMaster Sales or Service organisation or the TagMaster representative should be notified in order to facilitate repair or replacement of the equipment.

The equipment described in this manual is designed to be used by properly trained personnel only. Qualified personnel who are aware of the hazards involved and who are qualified for electrical installations shall carry out installation, adjustments and maintenance of the exposed equipment.

For correct and safe use of this equipment, it is essential that both operating and service personnel follow generally accepted safety procedures in addition to the safety precautions specified in this manual.

Specific warning and caution statements are used throughout this manual.

CAUTION is used to indicate correct operation or maintenance procedures in order to prevent damage to, or destruction of the equipment or other property.
WARNING indicates a potential danger that requires correct procedures or practices in order to prevent injury to personnel.

Whenever it is likely that safe operation is impaired, the equipment must be made inoperative and secure against unintended operation. The appropriate servicing authority must then be informed.

2.2 Installation

- Before any other connection is made, the equipment shall be mounted so that the metallic chassis is connected to protective ground.

  WARNING Interruption of the chassis connection with protective ground can make the equipment dangerous if it is connected to a defective power supply.

- The power supply used to provide the equipment with 24 or 12 VDC must comply with all relevant safety regulations. It must also be made for connection to the local mains voltage and be able to provide the necessary power without producing excessive heat.

- Fuses shall only be renewed by a qualified person who is aware of the risks involved.
  The use of repaired fuses is prohibited.

- Capacitors inside the equipment can hold their charge even if the equipment has been disconnected from all voltage sources.

- All PCB's removed from the equipment must be adequately protected against damage and all normal precautions regarding the use of tools must be observed.

- The equipment must be disconnected from all voltage sources before any installation or service work is made.

CAUTION Damage may be the result if;
- The equipment is switched on when parts are removed from the PC board.
- A PCB is removed within one minute after switching off the equipment.

3 SYSTEM COMPONENTS

The hardware of a TagMaster system is described briefly below.

3.1 Readers

The S1500/S1503 Communicator is a device for reading and writing ID Tags using 2.45 GHz microwaves. It is powered with 24 VDC but can be adopted for 12 VDC. The S1500 has built-in antennas for communication with the Tags and various serial interfaces for communication with a host computer. The Communicator also provides a movement detection function that can detect moving objects in the reading zone (also non-Tagged objects). One hundred frequency channels are available. The microprocessor is a 16-bit Hitachi H8/534. The S1500 is equipped with Flash EEPROM for program code and database. Designed for different installations, the S1500/S1503 comprises a wide range of I/O devices, including relays, optocouplers, DTMF receiver, LED, buzzer and a control panel. It also has a real-time-clock, 2/4Wire RS485 interface and a connector for an optional board.

The S1501/S1504/S1566 is a less advanced Communicator and is powered by 12 VDC only. It has no database memory, no real-time-clock, no optional card connector and the second serial interface is only 2Wire RS485. Refer to the datasheets for details.

3.2 ID Tags

An ID-Tag is device carrying ID information that can be read at a long distance using microwaves. Versions that can be read at a distance of up to 6 meters with the Communicator S1503/S1504 are available. The actual reading range depends on the Communicator type. Also different shaped versions of the tags are available. Some have the shape of a credit card but is slightly thicker. Each Tag has its own unique 8-digit mark. It is possible to read many Tags concurrently. To maintain the information, to get the long reading range and the high communication speed, a lithium battery cell is used. The life of the cell is depends of the Tag type but is typically 5 - 10 years and independent of how often the Tag is used. Certain types of Tags (e.g. *ScriptTag S1251*) can also be written by the user. The Tags then have a static RAM memory array that can be configured for different memory sizes; 14, 154 or 574 bits (32 bit checksum not included in these figures). Refer to the Tag (e.g. S1251 or S1450) data sheet for details.

4 ENVIRONMENTAL CONSIDERATIONS

4.1 General

Microwaves have, during more than a decade, proven to be the most reliable technology for identification systems. In particular, microwaves are unaffected by the normal electromagnetic background noise found in industries and elsewhere. They also form a base for products that have to withstand other rough environmental conditions as high temperatures, chemicals, shock and vibrations

4.2 Electromagnetic immunity

The TagMaster system has been tested and approved, in operation, according to the IEC standards. This guarantees trouble-free operation in demanding electromagnetic environments.

Electromagnetic interference on the microwave link
Industrial noise is typically present in the KHz and low MHz frequency band. The TagMaster system is only receptive for frequencies closed to 2.45 GHz so typical industrial noise will not affect the microwave communication. Transients from spot-welding equipment or from switching on other welding equipment, soldering machines and fluorescent lamps may produce short pulses around 2.45 GHz. However, since the TagMaster system, if interfered, will retransmit the entire message very fast there is in most cases ample time for a re-transmission. If strong microwave fields, from for instance microwave dryers, can be suspected, TagMaster AB should be consulted.

Electromagnetic interference in cables
By selecting a suitable communications interface, using specified cables and proper shielding and grounding, optimum communication reliability is ensured.

4.3 Temperature

4.3.1 Readers

In most applications, normal convection cooling is enough. In applications where heat is generated close to the Communicator, forced cooling or heat shields may be necessary.

4.3.2 Tags

TagMaster tags are available for operation in various ambient temperatures ranging from -40°C up to 85°C (refer to the data sheets). The specified reading range is valid for normal ambient temperature conditions. If reading range is critical and the intended operating temperature deviates from normal ambient temperature TagMaster AB should be consulted.

5 MECHANICAL INSTALLATION

This chapter describes the procedure of installing the TagMaster units mechanically. It is assumed that the location of Readers and Tags are specified, and the communication distances and movement speeds are considered during the project-planning phase. Likewise it is assumed that the project planning is well documented.

5.1 General

Microwaves penetrate wood, dirt, paint, plastic, and most other non metallic materials.
The TagMaster system employs circular polarisation and can therefore also often be used when metal surfaces are in the vicinity of the antenna and Tag, especially if the Tag is moving. In such cases however, adjustment of the Tag/Communicator position and distance may be necessary to find the best position. Always combine this with tests to verify that the installation will work.

5.2 Readers

5.2.1 Mounting

- Position the Communicator with the cable entries pointing downwards and so that the device is easily accessible for service.
- Mount the Communicator in an adjustable holder. (ComFix S1952 or PoleFix S1956 is recommended) and direct it so that it's lobe beam covers the position of the Tag(s).
- If Tags are to be mounted in car wind screens it is recommended to mount the Communicator approximately 2 meters up and tilted down for best performance. Refer to the typical installation illustrations in section 5.5.

5.2.2 Cables

To keep the sealing on a high level the Communicator should be mounted against a flat surface like for instance a mounting plate. It should be fastened on the mounting plate using the mounting holes located in the corners of the Communicator back panel. If the sealing level of IP 54 must be kept, then the cables must enter the Communicator using standard electrical feed through bushings.

5.3 ID-Tags

The front side of the ID-Tags must be oriented towards the front side of the Communicator. The backside of the tag has a type label on it. To get the maximum communication range the front surface of the Tag should be in parallel with the front side of the Communicator. If the Tag is miss-aligned relative to the front side of the Communicator, the communication range is reduced. Refer to the actual product datasheets for details.

Due to TagMaster's circular polarisation the rotational orientation of the Tag relative the Communicator is uncritical. The Tags can be mounted on any flat surface. If it is to be expected

that the mounting surface material, when warmed up, can expand in a different way than the Tag, the Tag must be mounted in such a way that the material expansion does not damage the Tag.

When screwing the Tags directly on to a surface, the screw must **not** be secured by pulling it until it does not move anymore. Instead a threaded hole should be used and the screw should be pulled until the Tag is just fixed. Then the screw should be secured using a washer and nut from behind.

For the credit card shaped Tags S1251 and S1255, TagMaster AB offers holders for use in vehicle windows or for personal carrying. (WinFix S1951 and Cardkeep S1953). For permanent mounting of the Tag in a vehicle window the CardTape S1954 is recommended.

5.4 Accessories

The following TagMaster accessories are available:

Product	Art.No	Description
RS485 Converter	S1942	Interface converter for RS232C - RS485 2Wires
WinFix	S1951	Tag holders for vehicle window mounting
CardTape	S1954	Tag tape for fixed mounting on wehicle window.
CardKeep	S1953	Tag holders for personal carrying
ComFix	S1952	Adjustable Communicator holder
PoleFix	S1956	Pole fastening bracket

5.5 Typical installations

5.5.1 Single lane identification

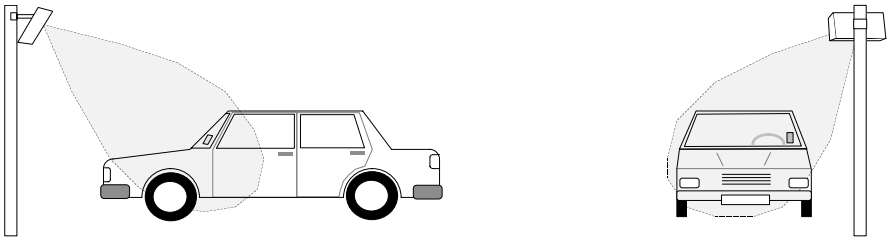

5.5.2 Multi lane identification

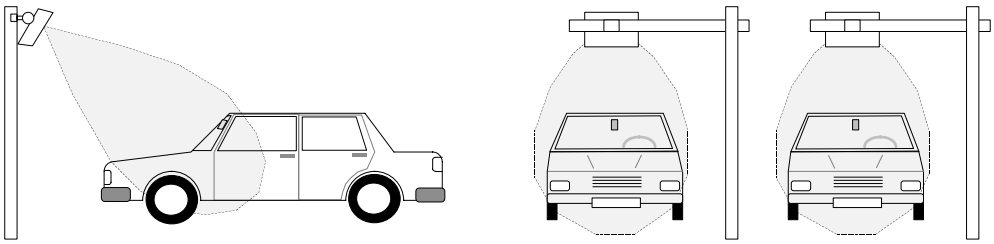

For optimum performance:

- Keep Tag and Communicator surfaces as parallel as possible
- Distance Tag - Communicator < 70% or less of maximum reading range, refer to the actual data sheet
- The windscreen might reduce maximum reading range with up to 0.5 meter

5.5.3 How to handle and mount the tag

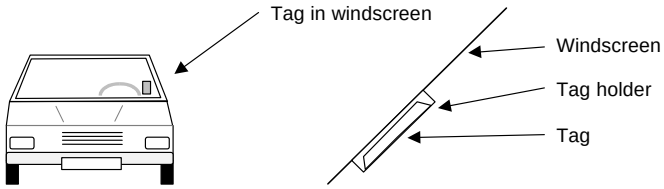

The tag should be mounted on the inside of the windscreen in a tag holder (WinFix). Note that the front side of the tag inside the holder should face the reader.

6 ELECTRICAL INSTALLATION

This chapter describes the procedure of electrically installing TagMaster Readers. Three basic connection-types are described:

- Host connection
- Digital I/O connection
- Power supply connection

It is assumed that the location of Readers and Tags are specified, and that cable paths and cable types are considered during the project-planning phase. Likewise it is assumed that the project planning is well documented.

6.1 General

To make connections to the Communicator the cover must be removed. Terminal blocks for connection of the external cables and jumpers for hardware adaptation are located under the cover according to following illustration of an S1500 communicator:

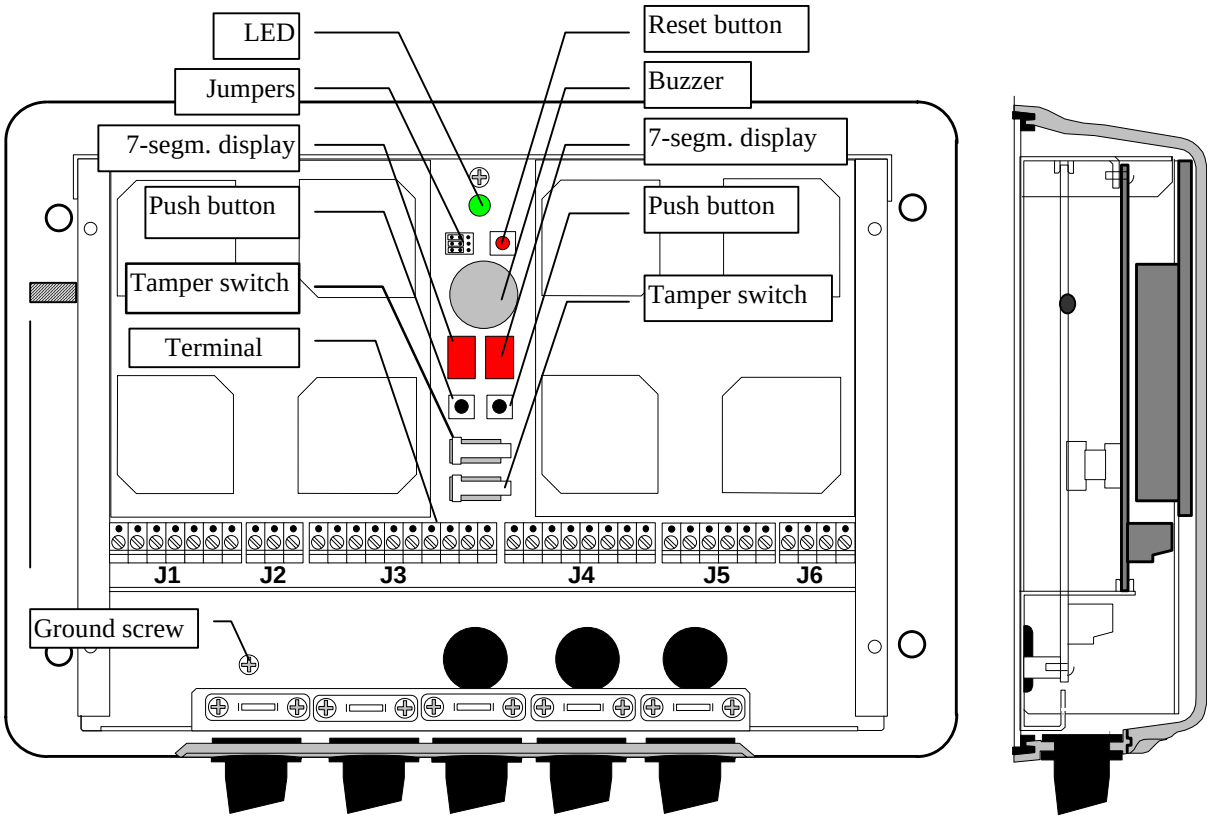

Connections to the Communicator are made using the terminal blocks J1 - J6.

Please note that the 7-segm. display, the buzzer and the upper tamper switch are components not present in the S1501. The use of these, as well as the use of the push buttons, is communicator software dependent and therefore described in the communicator software documentation.

Screened cables shall be used with screens clamped according to the figure below.

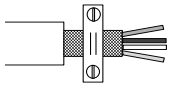

The electrical data and the connection diagram are shown below

Notes: The S1500/S1503 supports 24VDC power supply and can be adopted for 12VDC.
The S1501 supports 12VDC power supply only.
The S1501 does not support RS485-4Wire interface

DTMF (Terminal block J1)
2-wire interface to receive a dual tone signal and to power a DTMF device.

Parameter	Min	Max	Unit
Line volt. @ 10 mA	4.1	4.5	V
Tone level	-26	0	dBm

RS 232 - host and terminal (Terminal block J2)
Default: 9600 bps, 8 bits, no parity, 1 stop bit, ConfiTalk address 1

Parameter	Min	Max	Unit
Baud rate	1.2	19.2	kbits/s
Data bits	7	8	bits
Stop bits	1	2	bits
Parity	no - odd - even		

RS 485 - host (Terminal block J3)
Full (4 wire) or half duplex (2 wire). Default: 9600 bps, 8 bits, no parity, 1 stop bit, ConfiTalk address 1

Parameter	Min	Max	Unit
Baud rate	1.2	38.4	kbits/s
Data bits	7	8	bits
Stop bits	1	2	bits
Parity	no - odd - even		

Open collector outputs (Terminal block J4)

Parameter	Min	Max	Unit
Allowed volTage	1	30	V
Sink current Out 1	0	500	mA
Sink current Out 2	0	100	mA

Relay (Terminal block J4)

Parameter	Min	Max	Unit
Switch current		2	A
Switch volTage DC		220	V
Switch volTage AC		125	V
Switch power		50	W

Optocoupler inputs (Terminal block J5)

Parameter	Min	Max	Unit
High volTage	2.4	30	V
Low volTage	0.0	0.2	V

Power (Terminal block J6)

Parameter	Min	Max	Unit
24VDC Supply volTage	20	28	V
12VDC Supply volTage	10	14	V
Consumption 24V		150	mA
Consumption12V		500	mA

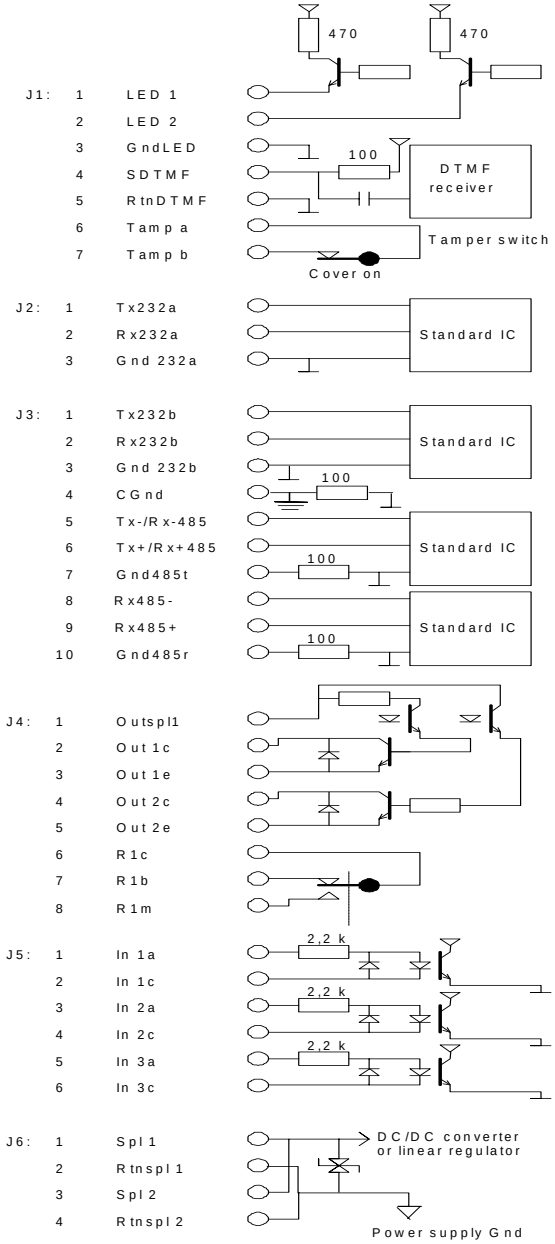

6.2 Connection diagrams

6.2.1 Single Communicator connection using port A for RS232C

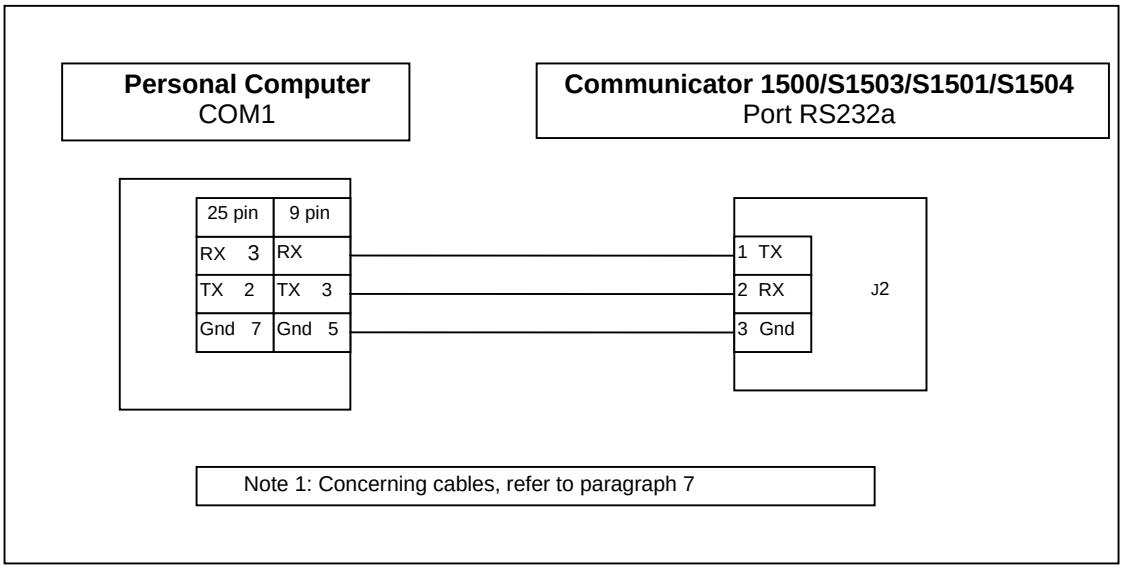

6.2.2 Single Communicator connection using port B for RS232C

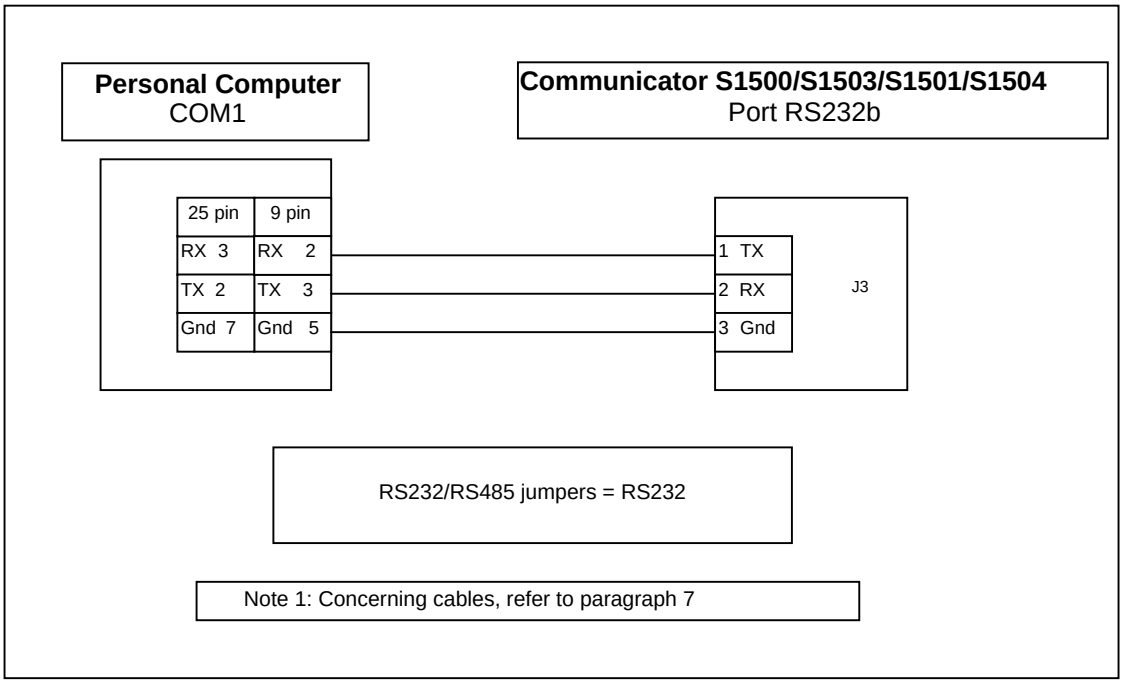

6.2.3 Direct Communicator multipoint connection using port B for 2-Wire RS485

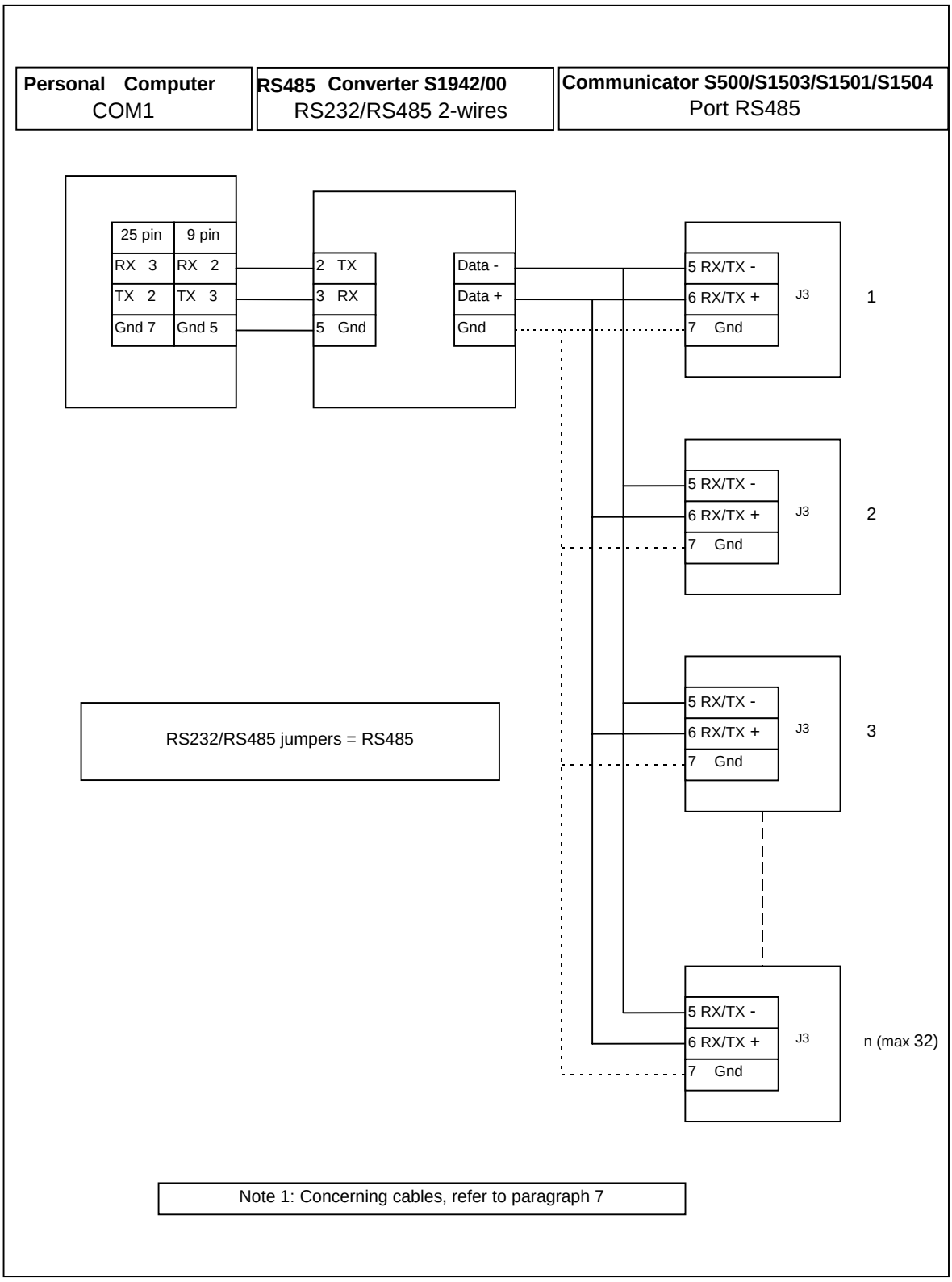

6.2.4 Digital I/O connections (example)

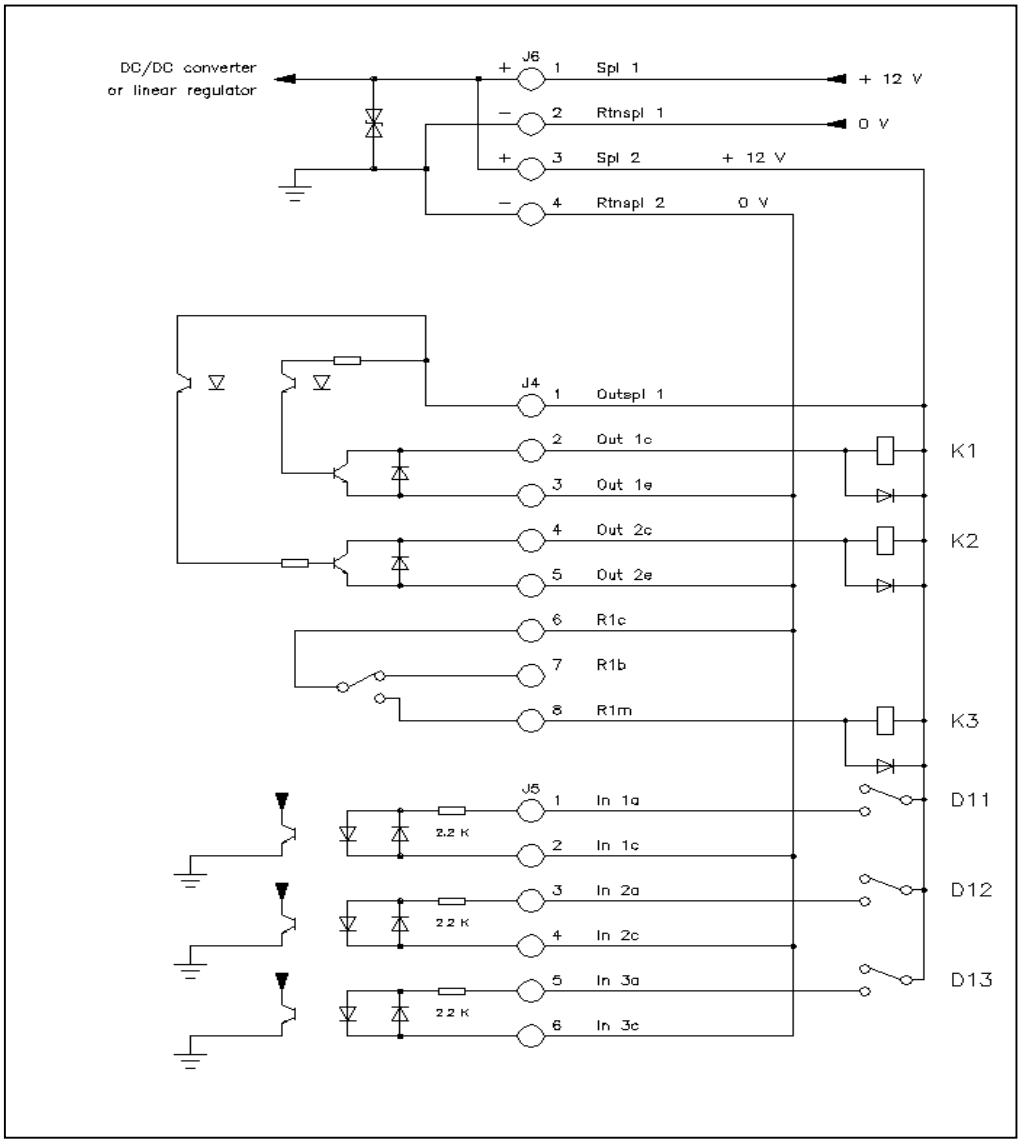

Optocoupler inputs:	ON = from 2.4 to 30 VDC	OFF = from 0.0 to 0.2 VDC
Optocoupler output 1:	Voltage from 1 to 30 VDC	Sink current from 0 to 500 mA
Optocoupler output 2:	Voltage from 1 to 30 VDC	Sink current from 0 to 100 mA
Relay output:	Switch current: 2 A Switch voltage: 220 VDC Switch voltage: 125 VAC Switch power: 50W	

CAUTION
Omission of the protective free-wheel-diodes across K1, K2 and K3 may damage the Communicator.

6.2.5 Power supply connection

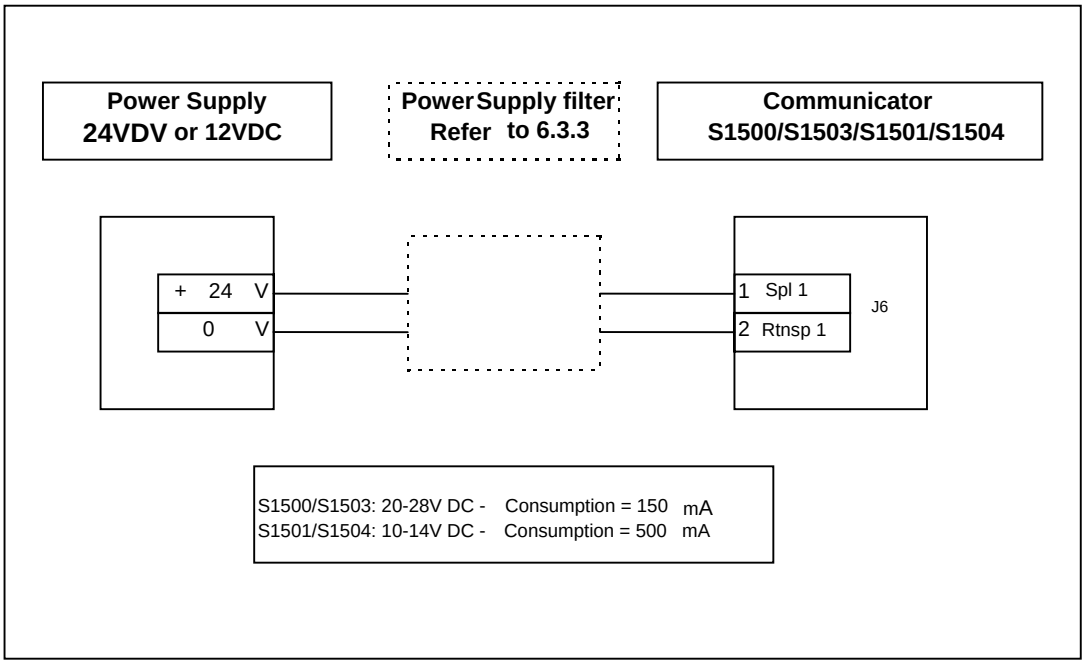

6.3 Hardware adaptation

This section describes how to set jumpers and how to adapt the S1500 or S1503 for 12VDC

6.3.1 Jumper connections

There are jumpers for selecting if port B should be configured as RS232 or RS485 and if the RAM backup battery shall be connected. Se figure below.

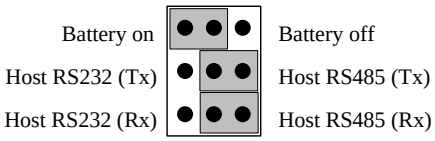

6.3.2 Adaptation of the S1500 or S1503 to 12 VDC power supply

CAUTION
This must be done by properly trained personnel only
Under the rightmost antenna, additional jumpers are available for setting the Communicator for power from a 12 or 24 VDC power supply. Marking on the PC boards indicate how to set these jumpers. The factory setting is 24VDC.

7 CABLES

7.1 Power supply

Cable specification:

AWG	0.5 mm^2
Number of wires	2
VolTage rating	300 V
Temperature rating	+80°C
Recommended external diameter	> 5 mm
Maximum length	100 m

7.2 Digital I/O and DTMF

Cable specification:

AWG	0.5 mm^2
Number of wires	Application dependent
VolTage rating	300 V
Temperature rating	+80°C
Recommended external diameter	> 5 mm
Maximum length	100 m

7.3 RS232

Cable specification according to EIA RS232C

Recommended type: Belden 9184 or Belden 9502

7.4 RS485

Cable specification according to EIA RS485

7.4.1 2-Wires interface

Recommended type: Belden 9841

7.4.2 4-Wires interface

Recommended supplier: Belden 9841

8 START-UP

8.1 General

After having completed the physical installation as described in previous sections, a systematic check of the installation and system performance should be carried out.
This work can be divided into two parts: **inspection** and **performance verification**.
When something does not work as expected the tips in paragraph TROUBLE SHOOTING may be valuable.

8.2 Inspection

- Ensure that there are no metal objects between the Communicator and the Tag in the position(s) where communication is to take place.
- Ensure that the Tags and Readers are aligned according to the project documentation. Maximum communication distances and communication paths are achieved when Tag and Readers are in parallel. Communication at maximum specified distance and misalignment should be avoided.
- Ensure that the Readers are not placed in positions, where they are exposed to unnecessary heat or electromagnetism.

8.3 Verifying communication

8.3.1 Serial host communication

Connect a PC to the prepared host connection and verify that the PC can communicate with the Communicator. If the actual Communicator is a standard S1500/S1503 equipped with Pyramid software this can be made by using the TagMaster demo software Saccess that runs under DOS, Windows 3.1, 95/98/ME and NT/2000/XP. An alternative to Saccess is the TagMaster test software ConfiTalk Commander which can be used for any Communicator where the resident software was developed using ConfiLib and where ConfiTalk is enabled, for example the S1501with Solid software. A final verification should be made using the actual host project software.

8.3.2 Communicator - Tag communication

Put a Tag in front of the Communicator preferably having the Tag on the object where it normally will be mounted. Perform repeated Tag readings when simultaneously moving the Tag along the expected movement path and checking that the Tag can be read in all expected positions.

If the actual Communicator is a standard S1500/1503, the repeated readings can be made by using the TagMaster demo software Saccess that runs under DOS, Windows 3.1, 95/98/ME and NT/2000/XP and perform ”read-beep”. This puts the Communicator in a mode where it makes repeated Tag readings and beeps the buzzer for each OK-read. The beep should be ”homogenous” for all expected positions along the movement path.

An alternative, which can be used in case the Communicator is a standard S1501, is to use the terminal interface ”Check-SW” and observe the read results on the screen. It must be possible to read the Tag in all expected positions along the expected movement path. For detailed information concerning how to use Check-SW please refer to the manual TagMaster Programmer’s Guide.

Special care should be taken if metal is present close to the communication lobe between Tag and Communicator. In such cases adjustment of the Tag/Communicator position and distance may be necessary to find the best location of the both. Always combine this with repetitive Tag read tests to verify that the installation works well.

If the Communicator is installed with a low grazing angle to a reflecting surface such as a road or floor, the multipath effect can increase the reading distance. Since the multipath effect may as well reduce the lobe width, a repetitive Tag read test is recommended to check the communication in such installations. If Tags are passing at a close distance from the Communicator it might be necessary to reduce the reading range to avoid unwanted readings of remote Tags. The range is reduced by setting of the power and sensitivity parameters.

8.3.3 Digital I/O - communication with external devices

The method for checking the digital I/O depends on the software application.
If the customer makes the software application, then the I/O devices must be tested from the host project software. If the Communicator is a standard S1500 with Pyramid software, digital I/O can be checked directly from the Saccess demo-software. An alternative that can be used for both the Communicator S1501 with Solid software and S1500/S1503 with Pyramid software is to use the I/O commands in the terminal interface ”Check-SW” and observe the results. For detailed information concerning how to use Check-SW please refer to the manual ‘TagMaster Programmer’s Guide’.

9 TROUBLE SHOOTING

This section describes problems commonly encountered during system start up

9.1 An S1500/S1503 communicator seems not to read Tags

If the Pyramid software in S1500 is used in the operational mode (OP) = On then the Pyramid software will try to fetch all Tag read results. Pyramid does this by making use of the ConfiLib function Bsw_Event_Handler_Get_Event. If a PC resident software application also tries to fetch read results using the ConfiLib function Bsw_Event_Handler_Get_Event then the PC software will often not get any. Therefore, in order to make it possible for a PC resident software to fetch read results from the communicator using the ConfiLib function Bsw_Event_Handler_Get_Event, then the operational mode (OP) must be switched = Off.. This is done via the control panel or via the Saccess PC-demo software.

9.2 Unsuitable interface converters

Connecting RS232/RS85 converters to the Communicator port A or B requires intelligent converters i.e. converters that can switch between receive and transmit dependent of the information flow direction.

9.3 Interference

If more than one Communicator are used in closed vicinity of each other, they must be set to different RF channels. Neglecting to do this will reduce communication range.

9.4 Using wrong address

When one host in a polled network controls many Readers, different Communicator addresses must be used. Neglecting this will cause serious communication problems in the network.

9.5 Forgetting the free-wheel diode across inductive loads

Inductive loads connected to the Communicator digital and relay outputs must be provided with a free-wheel-diode to prevent malfunction or damage of the Communicator.

9.6 Using different data speed in the Tag(s) and in the Communicator(s).

A Communicator operating at high data speed cannot communicate with Tags set to low data speed and vice versa.

9.7 Using an unsuitable power supply

If an unsuitable power supply is used for powering the Readers the Communicator functions may be unreliable. In worst case the Communicator does not work at all. The power supply used for a TagMaster Communicator must deliver a DC power according to following specifications:

Power supply type	Voltage limits	min DC-current
24VDC	20 - 28 Volt	200 mA
12VDC	10 - 14 Volt	550 mA

The voltage from the power supply must stay within the specified limits all the time.
This also includes a possible ripple-voltage from the power supply.