RHIC

CRYOGENICS SYSTEM

Time meeting

4-5-2016

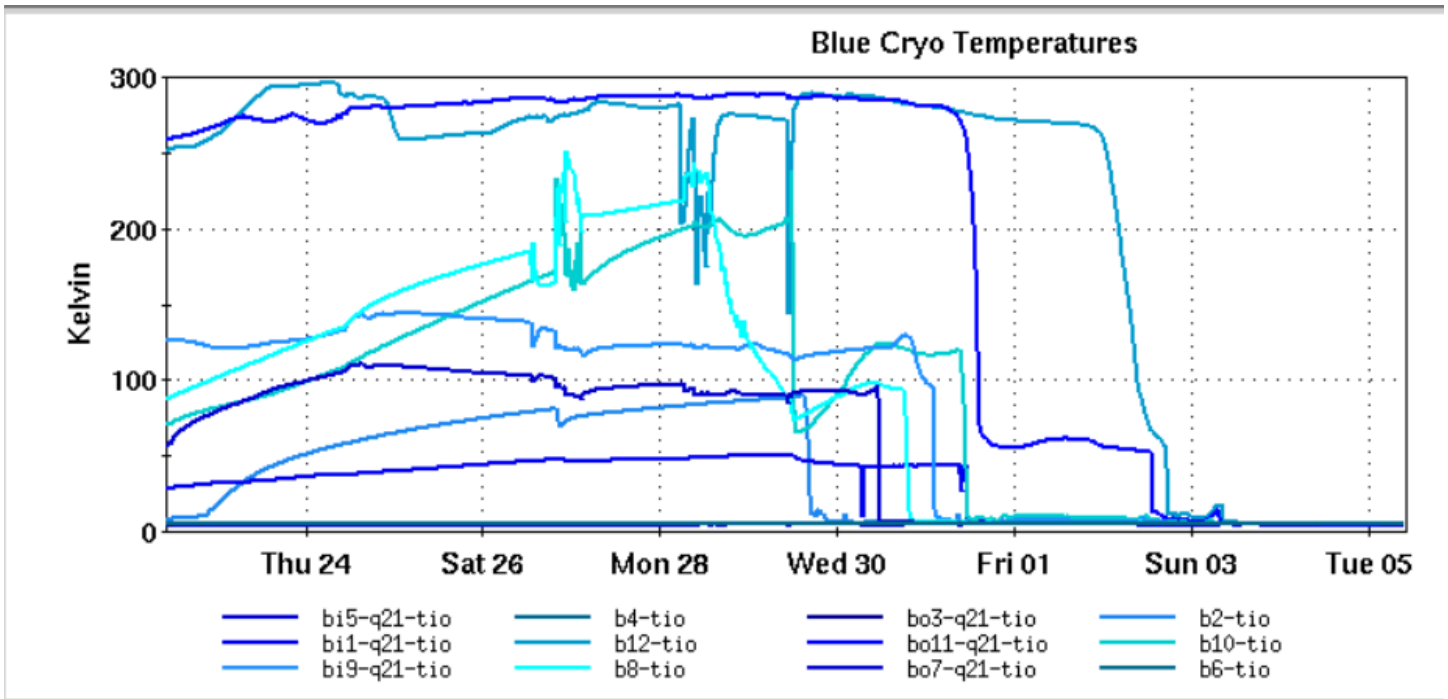
Blue Cryo Temperatures
Kelvin
300
200
100
0
Thu 24
Sat 26
Mon 28
Wed 30
Fri 01
Sun 03
Tue 05
bi5-q21-tio
bi1-q21-tio
bi9-q21-tio
b4-tio
b12-tio
b8-tio
bo3-q21-tio
bo11-q21-tio
bo7-q21-tio
b2-tio
b10-tio
b6-tio

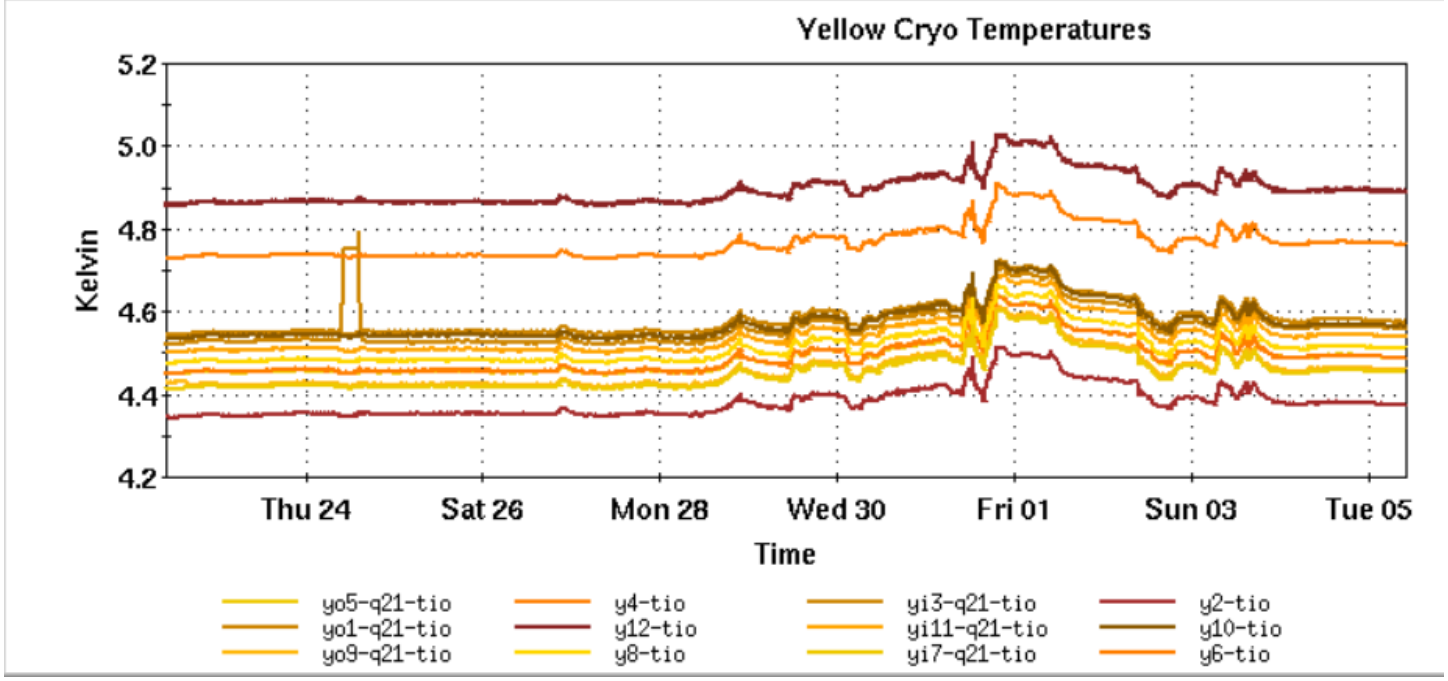
Yellow Cryo Temperatures
Kelvin
5.2
5.0
4.8
4.6
4.4
4.2
Thu 24
Sat 26
Mon 28
Wed 30
Fri 01
Sun 03
Tue 05
Time
yo5-q21-tio
yo1-q21-tio
yo9-q21-tio
y4-tio
y12-tio
y8-tio
yi3-q21-tio
yi11-q21-tio
yi7-q21-tio
y2-tio
y10-tio
y6-tio

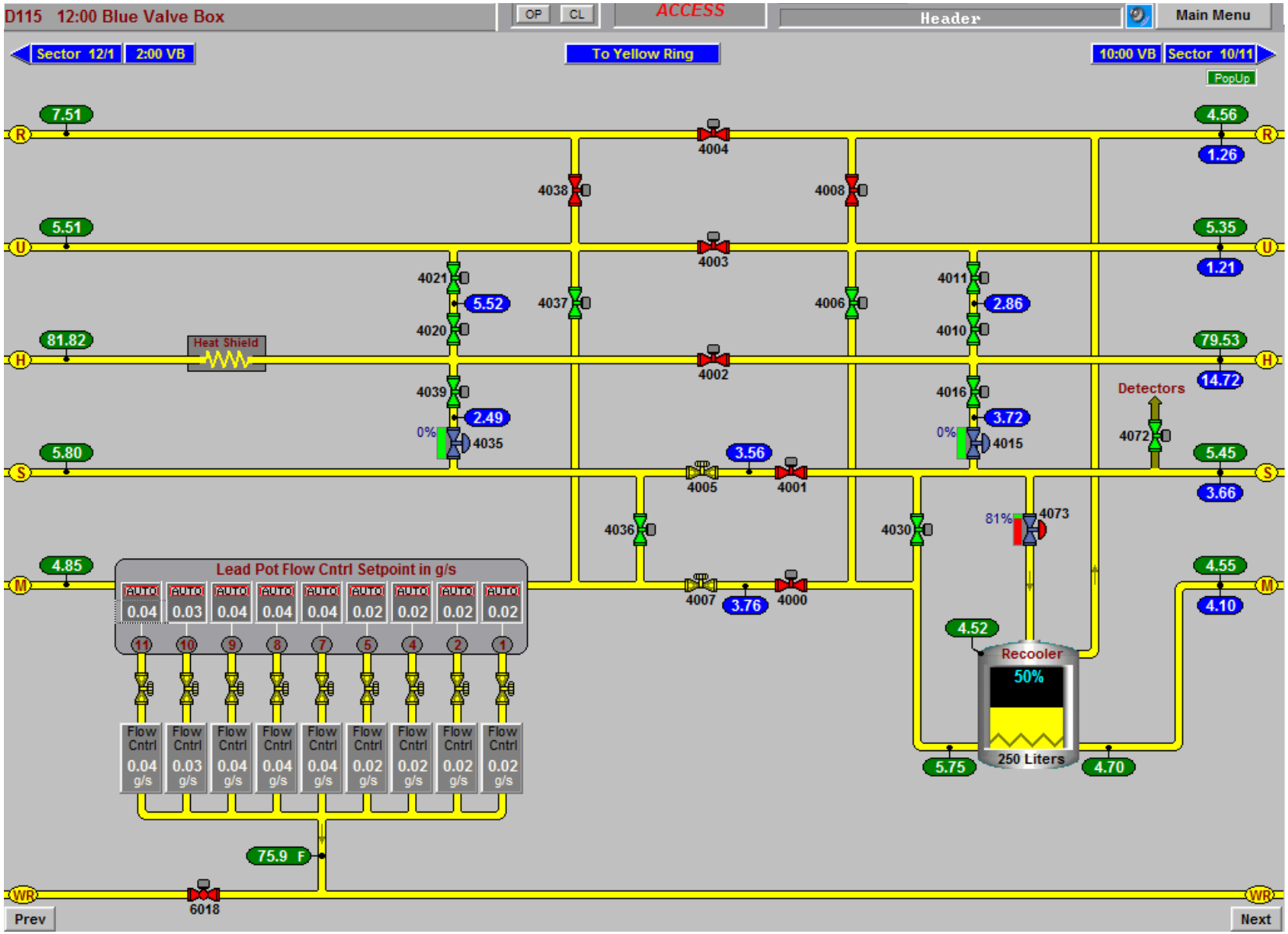
D115 12:00 Blue Valve Box
OP
CL
ACCESS
Header
Main Menu
Sector 12/1
2:00 VB
To Yellow Ring
10:00 VB
Sector 10/11
PopUp
7.51
4.56
1.26
5.51
5.35
1.21
81.82
79.53
14.72
5.80
5.45
3.66
4.85
4.55
4.10
R
U
H
S
M
WR
4004
4003
4002
4005
4001
4007
4000
4038
4008
4021
4020
5.52
4037
4006
4011
4010
2.86
Heat Shield
4039
2.49
0%
4035
4016
3.72
0%
4015
Detectors
4072
3.56
4036
4030
81%
4073
Lead Pot Flow Cntrl Setpoint in g/s
AUTO
0.04
0.03
0.04
0.04
0.04
0.02
0.02
0.02
0.02
11
10
9
8
7
5
4
2
1
Flow Cntrl
0.04 g/s
0.03 g/s
0.04 g/s
0.04 g/s
0.04 g/s
0.02 g/s
0.02 g/s
0.02 g/s
0.02 g/s
75.9 F
6018
4.52
Recooler
50%
250 Liters
5.75
4.70
Prev
Next

10/11 COOLDOWN

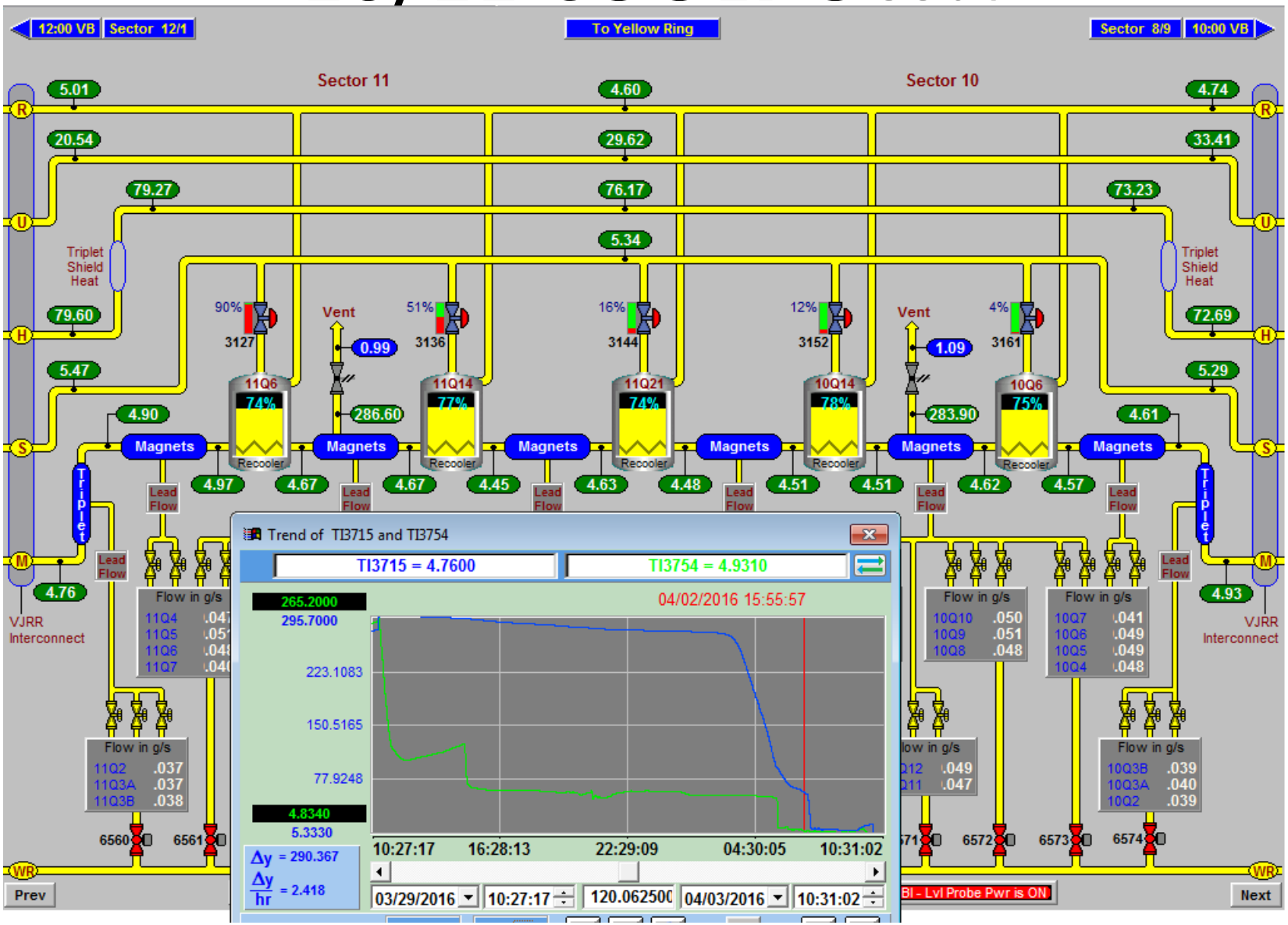

CEC

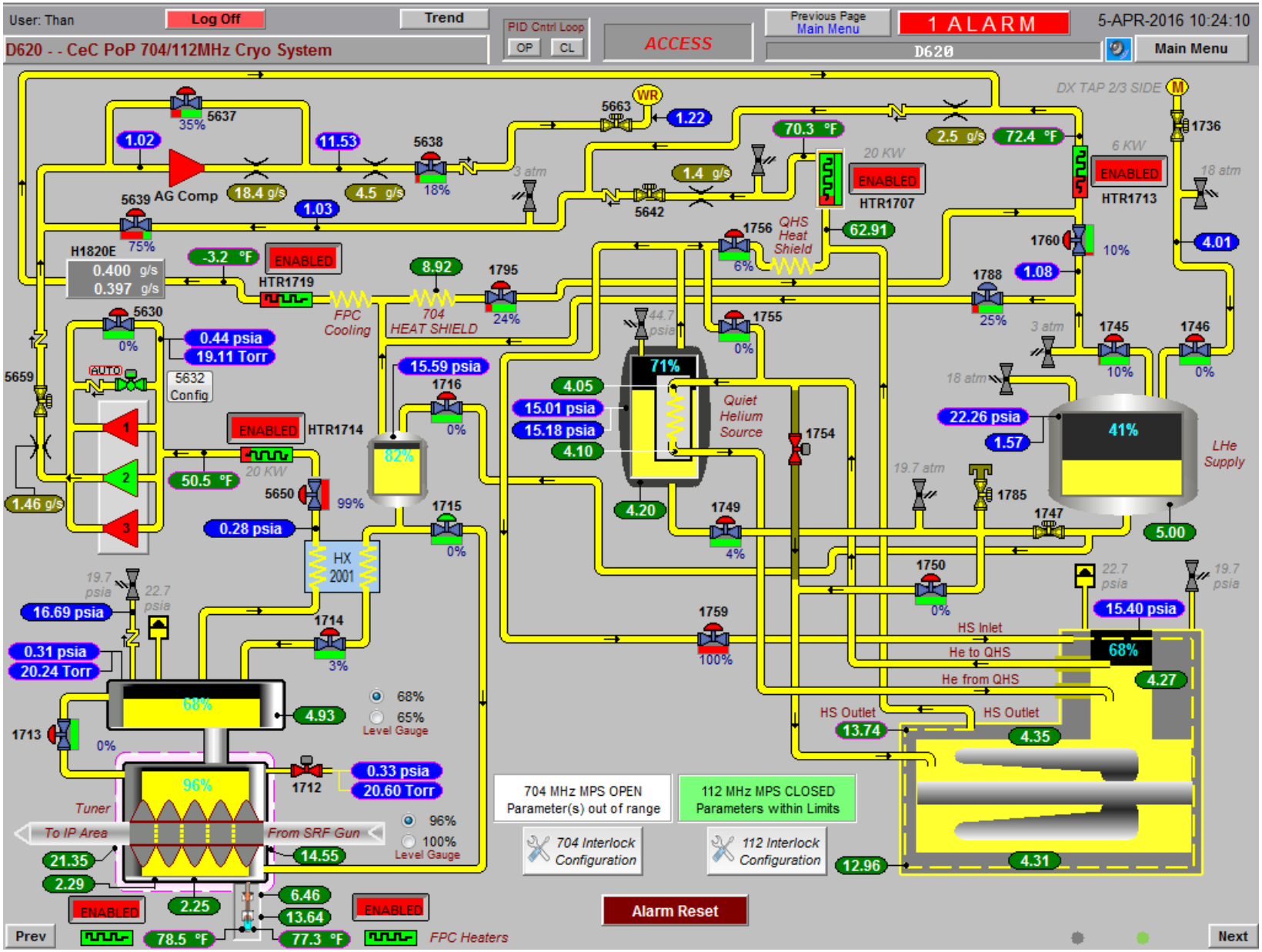
User: Than
Log Off
Trend
PID Cntrl Loop
OP
CL
ACCESS
Previous Page
Main Menu
1 ALARM
5-APR-2016 10:24:10
D620 - - CeC PoP 704/112MHz Cryo System
D620
Main Menu
DX TAP 2/3 SIDE
5637
35%
1.02
11.53
5638
18%
5663
WR
1.22
70.3 °F
2.5 g/s
72.4 °F
1736
5639 AG Comp
18.4 g/s
4.5 g/s
1.03
3 atm
1.4 g/s
5642
20 KW
ENABLED
HTR1707
6 KW
ENABLED
HTR1713
18 atm
75%
H1820E
0.400 g/s
0.397 g/s
-3.2 °F
ENABLED
HTR1719
8.92
1795
24%
FPC Cooling
704 HEAT SHIELD
1756
6%
QHS Heat Shield
62.91
1760
10%
4.01
1788
25%
1.08
5630
0%
0.44 psia
19.11 Torr
5659
AUTO
5632 Config
15.59 psia
1716
0%
44.7 psia
71%
4.05
15.01 psia
15.18 psia
4.10
Quiet Helium Source
1755
0%
3 atm
1745
10%
1746
0%
18 atm
22.26 psia
1.57
41%
LHe Supply
ENABLED
HTR1714
20 KW
50.5 °F
5650
99%
82%
1.46 g/s
0.28 psia
1715
0%
1754
19.7 atm
1785
1747
5.00
4.20
1749
4%
HX 2001
19.7 psia
22.7 psia
16.69 psia
1714
3%
1750
0%
22.7 psia
19.7 psia
15.40 psia
1759
100%
HS Inlet
He to QHS
68%
He from QHS
4.27
0.31 psia
20.24 Torr
68%
4.93
68%
65%
Level Gauge
1713
0%
HS Outlet
13.74
HS Outlet
4.35
96%
1712
0.33 psia
20.60 Torr
Tuner
To IP Area
From SRF Gun
96%
100%
Level Gauge
21.35
14.55
2.29
704 MHz MPS OPEN
Parameter(s) out of range
112 MHz MPS CLOSED
Parameters within Limits
704 Interlock Configuration
112 Interlock Configuration
12.96
4.31
ENABLED
2.25
6.46
13.64
ENABLED
Alarm Reset
Prev
78.5 °F
77.3 °F
FPC Heaters
Next
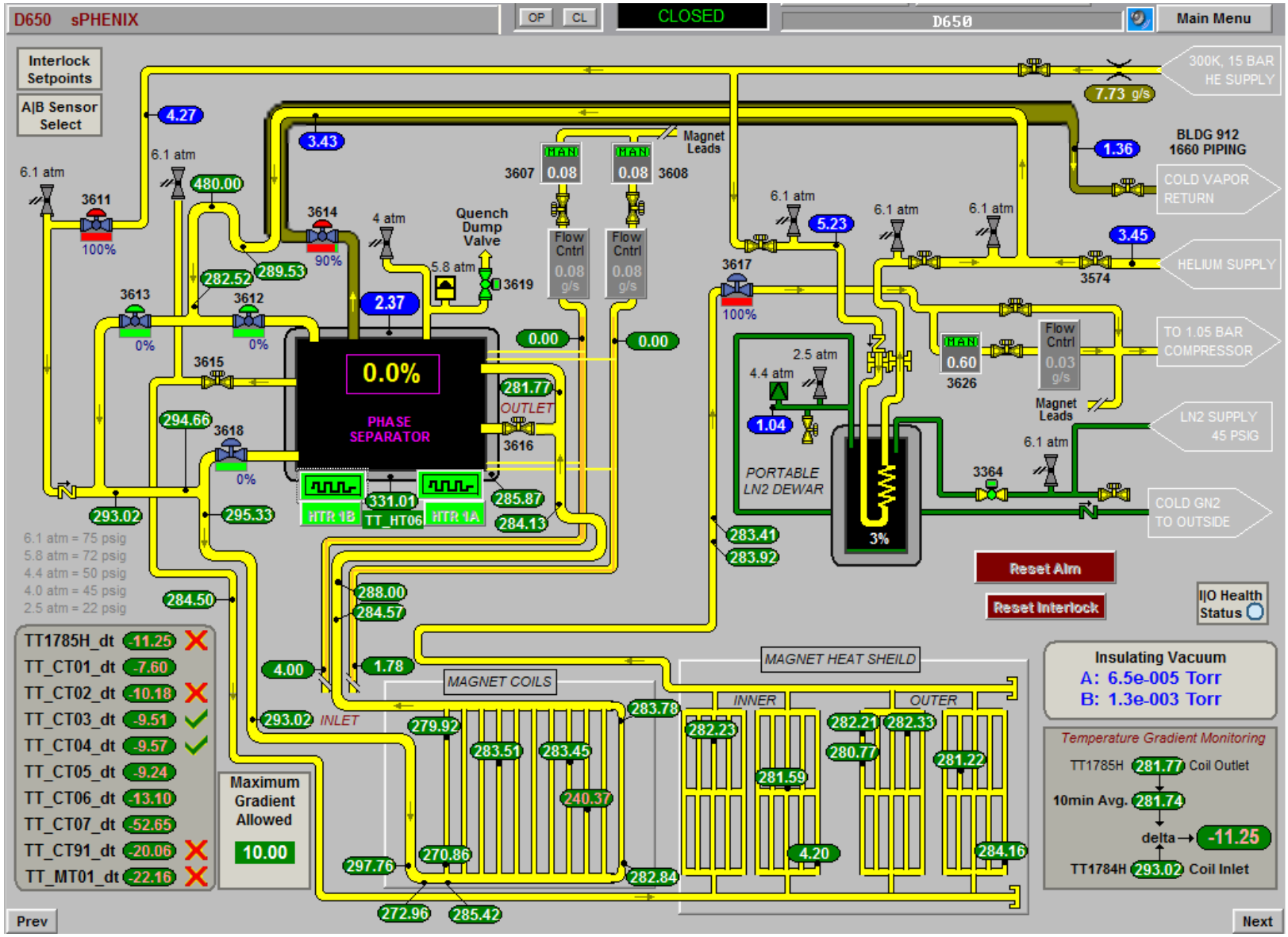
SPHENIX SOLENOID BLDG 912