RHIC

CRYOGENICS SYSTEM

Time meeting

3-22-2016

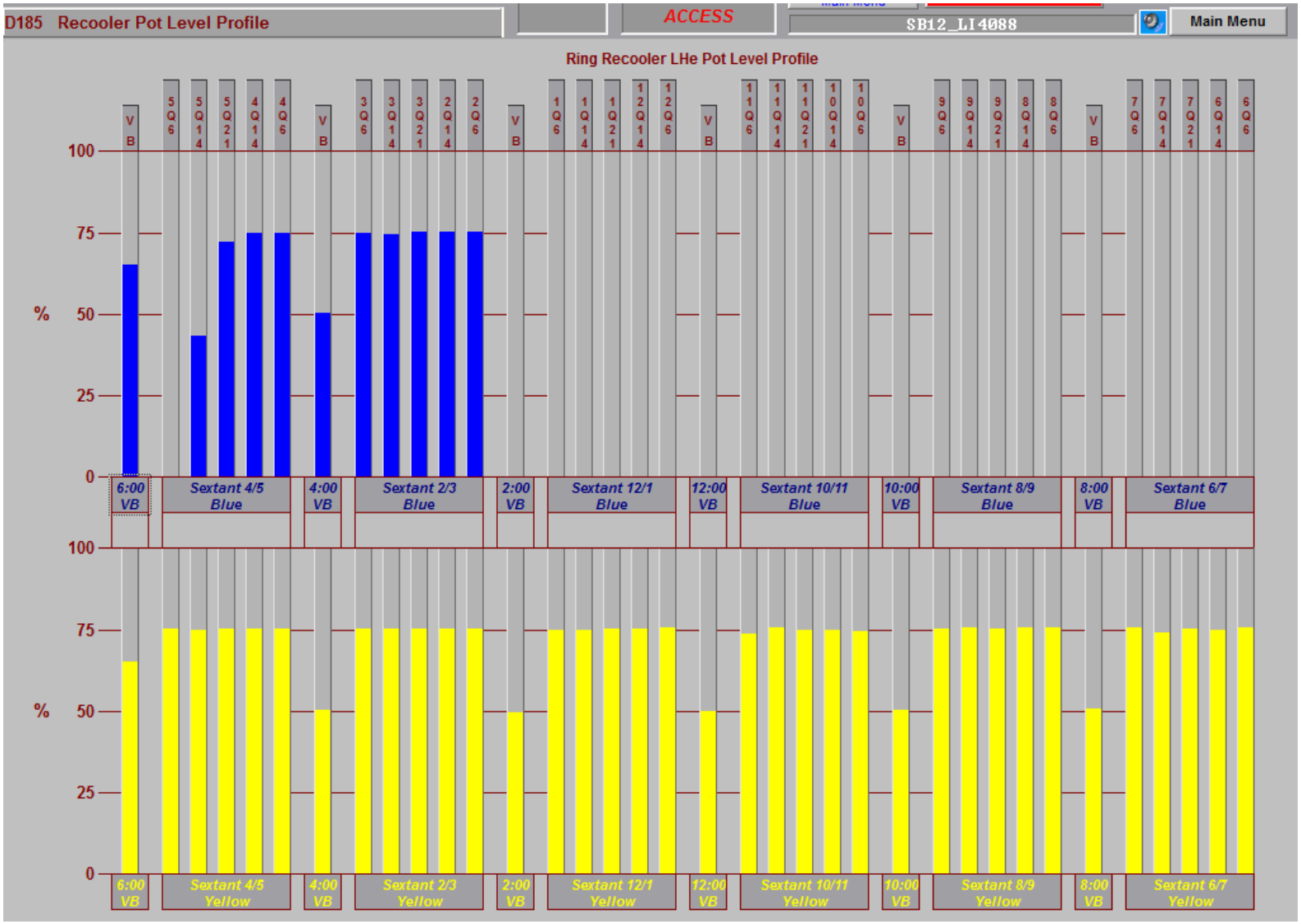
D185 Recooler Pot Level Profile
ACCESS
SB12_LI4088
Main Menu
Ring Recooler LHe Pot Level Profile
%
100
75
50
25
0
6:00 VB
Sextant 4/5 Blue
4:00 VB
Sextant 2/3 Blue
2:00 VB
Sextant 12/1 Blue
12:00 VB
Sextant 10/11 Blue
10:00 VB
Sextant 8/9 Blue
8:00 VB
Sextant 6/7 Blue
Sextant 4/5 Yellow
Sextant 2/3 Yellow
Sextant 12/1 Yellow
Sextant 10/11 Yellow
Sextant 8/9 Yellow
Sextant 6/7 Yellow

RHIC SEXTANT 10/11 WARMUP

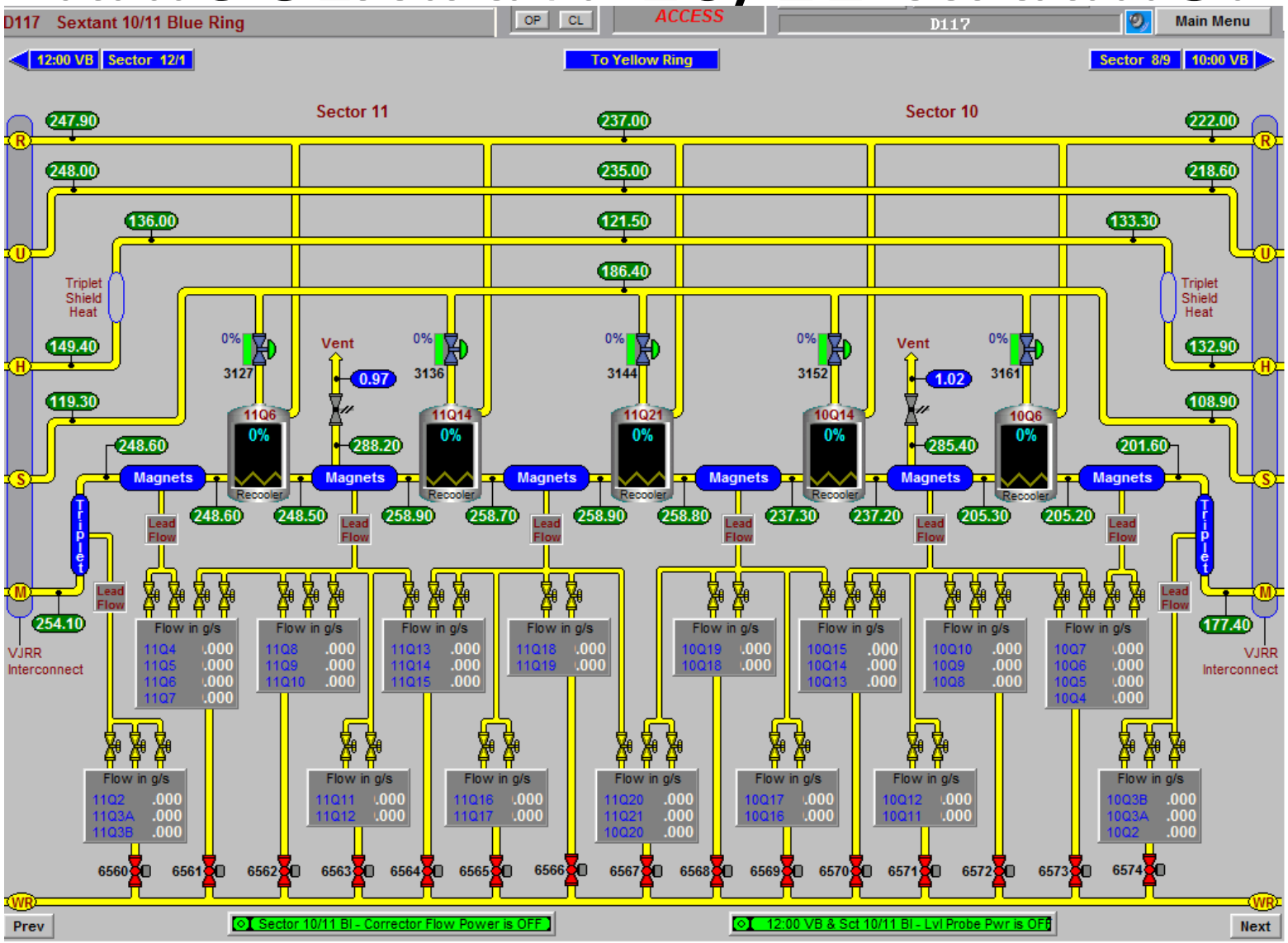

BLUE Temperature

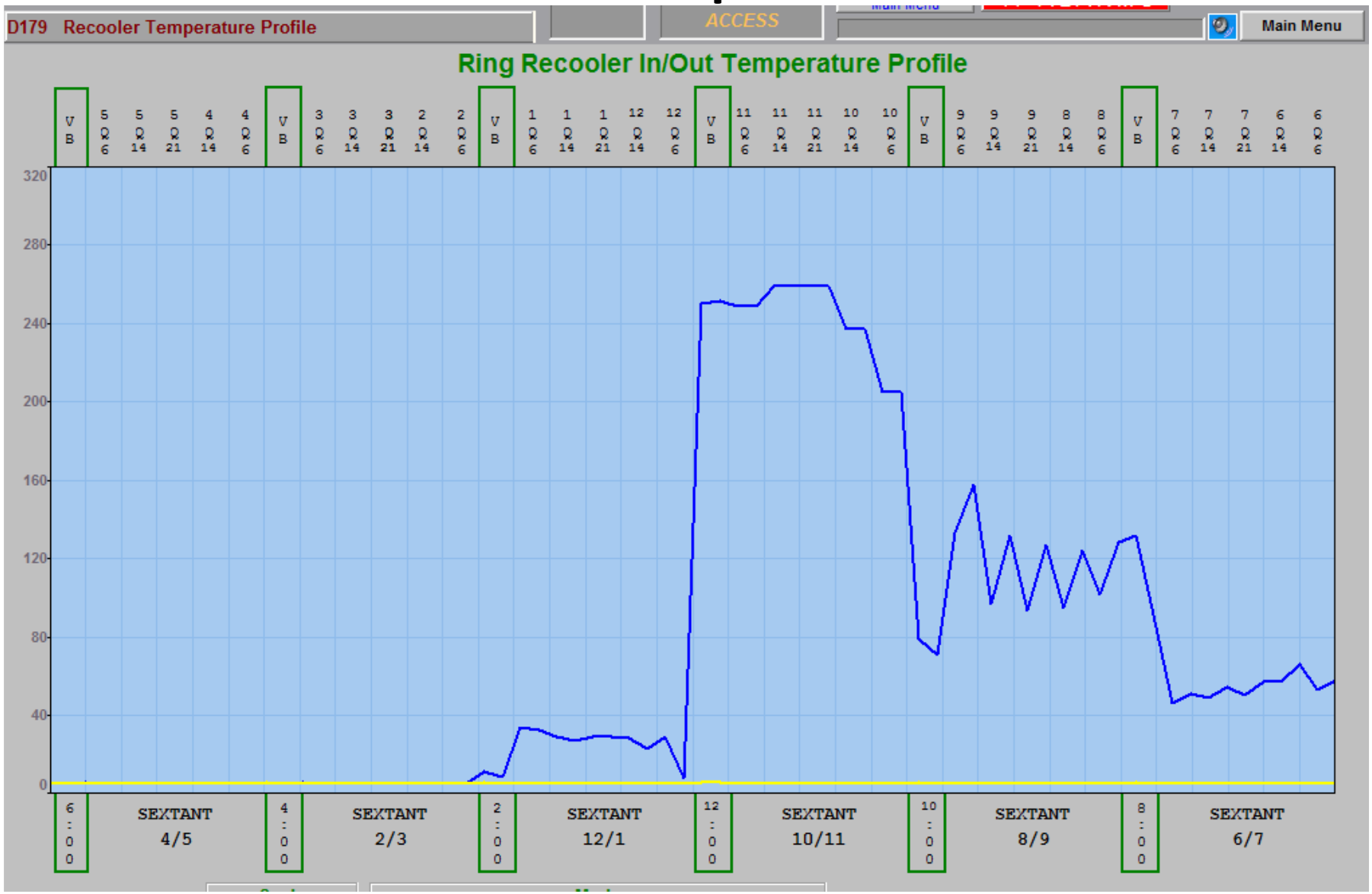

Heat shield

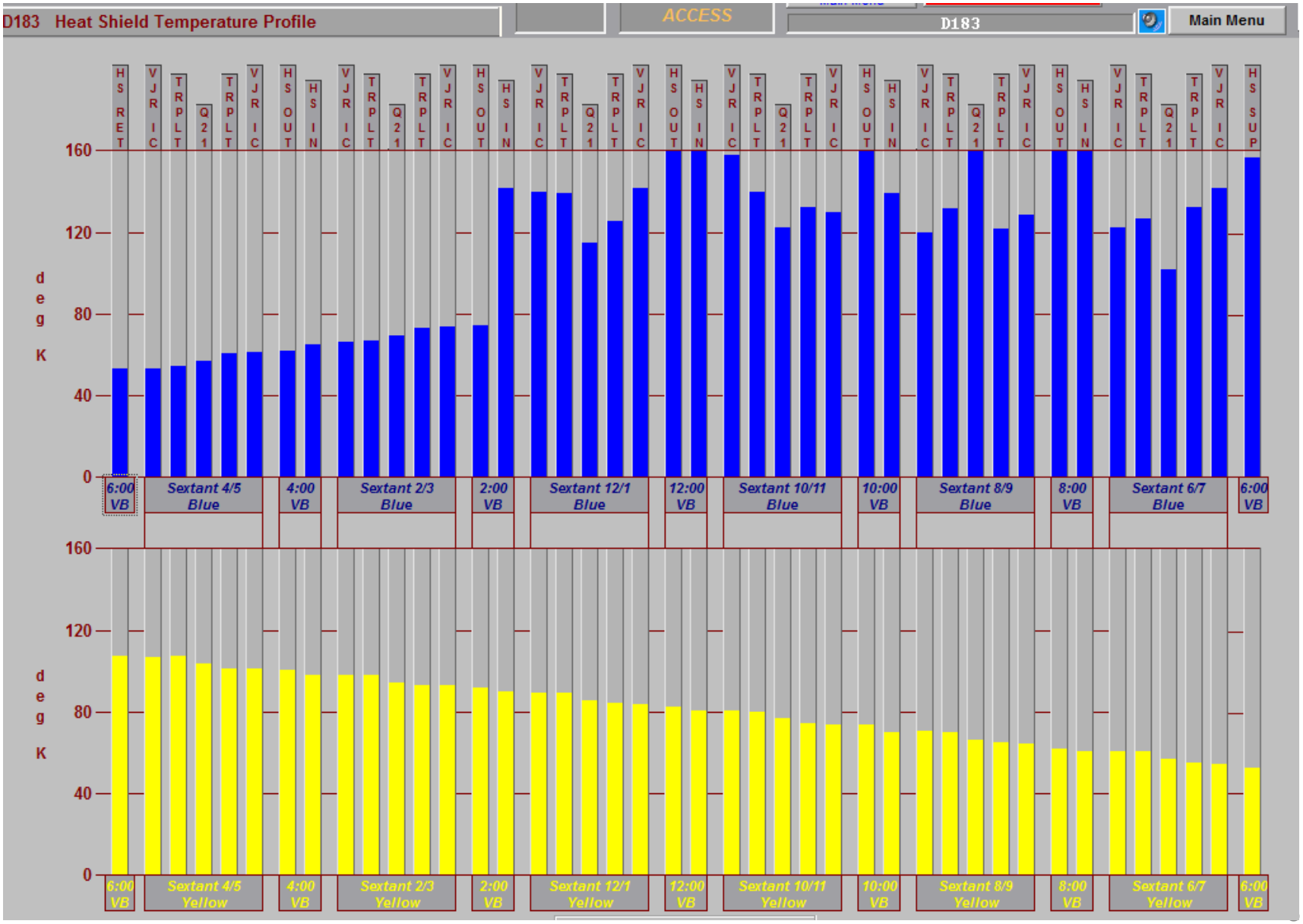
D183 Heat Shield Temperature Profile
ACCESS
D183
Main Menu
HS RET
VJR IC
TRPLT
Q21
TRPLT
VJR IC
HS OUT
HS IN
VJR IC
TRPLT
Q21
TRPLT
VJR IC
HS OUT
HS IN
VJR IC
TRPLT
Q21
TRPLT
VJR IC
HS OUT
HS IN
VJR IC
TRPLT
Q21
TRPLT
VJR IC
HS OUT
HS IN
VJR IC
TRPLT
Q21
TRPLT
VJR IC
HS OUT
HS IN
VJR IC
TRPLT
Q21
TRPLT
VJR IC
HS SUP
deg K
160
120
80
40
0
6:00 VB
Sextant 4/5 Blue
4:00 VB
Sextant 2/3 Blue
2:00 VB
Sextant 12/1 Blue
12:00 VB
Sextant 10/11 Blue
10:00 VB
Sextant 8/9 Blue
8:00 VB
Sextant 6/7 Blue
6:00 VB
deg K
160
120
80
40
0
6:00 VB
Sextant 4/5 Yellow
4:00 VB
Sextant 2/3 Yellow
2:00 VB
Sextant 12/1 Yellow
12:00 VB
Sextant 10/11 Yellow
10:00 VB
Sextant 8/9 Yellow
8:00 VB
Sextant 6/7 Yellow
6:00 VB

Warmup

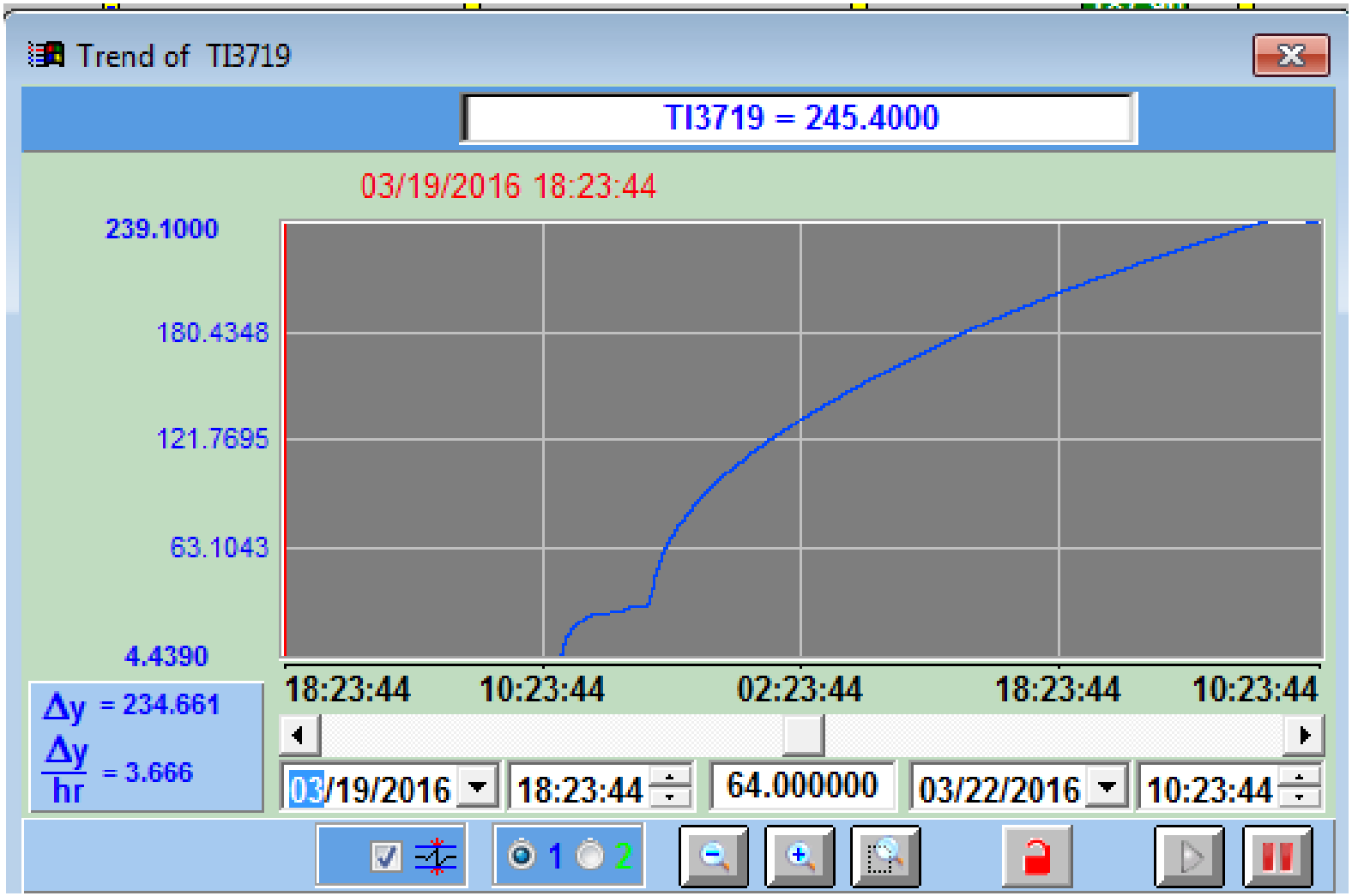
Trend of TI3719
TI3719 = 245.4000
03/19/2016 18:23:44
239.1000
180.4348
121.7695
63.1043
4.4390
18:23:44
10:23:44
02:23:44
18:23:44
10:23:44
Δy = 234.661
Δy/hr = 3.666
03/19/2016
18:23:44
64.000000
03/22/2016
10:23:44
1
2

Heaters controls

ValveBox 10-BLUE

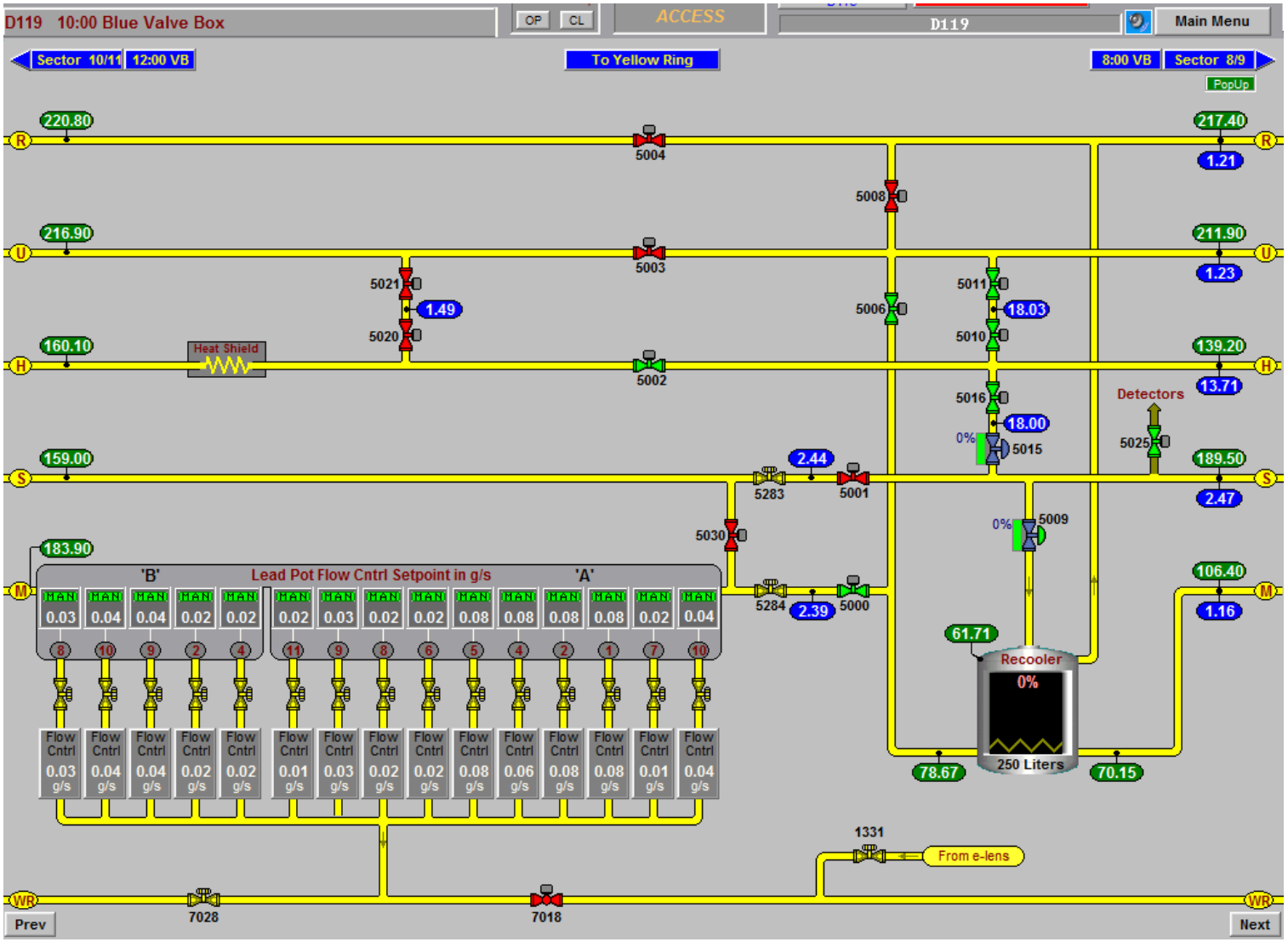

ValveBox 6-BLUE

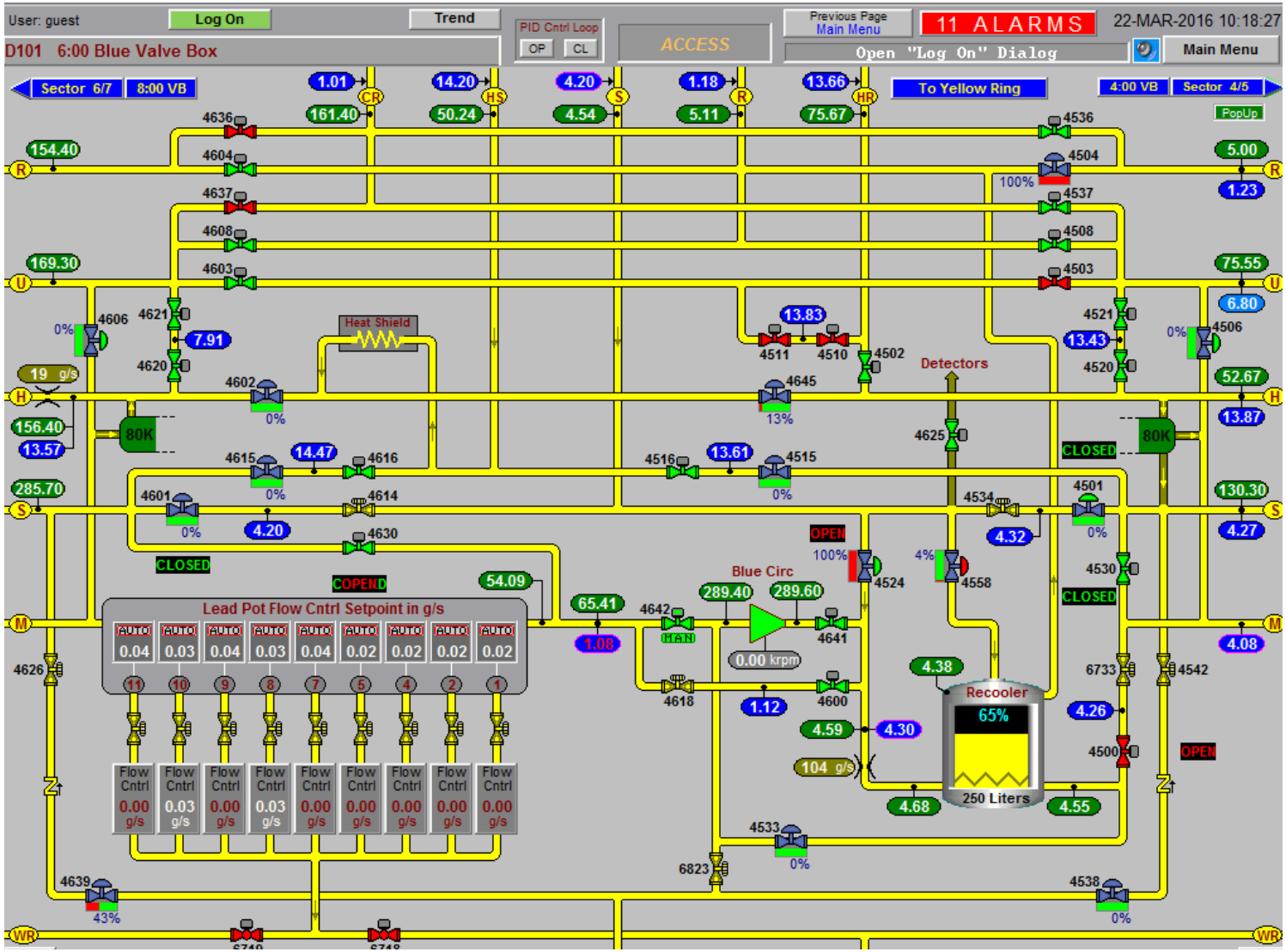

Valvebox12 BLUE

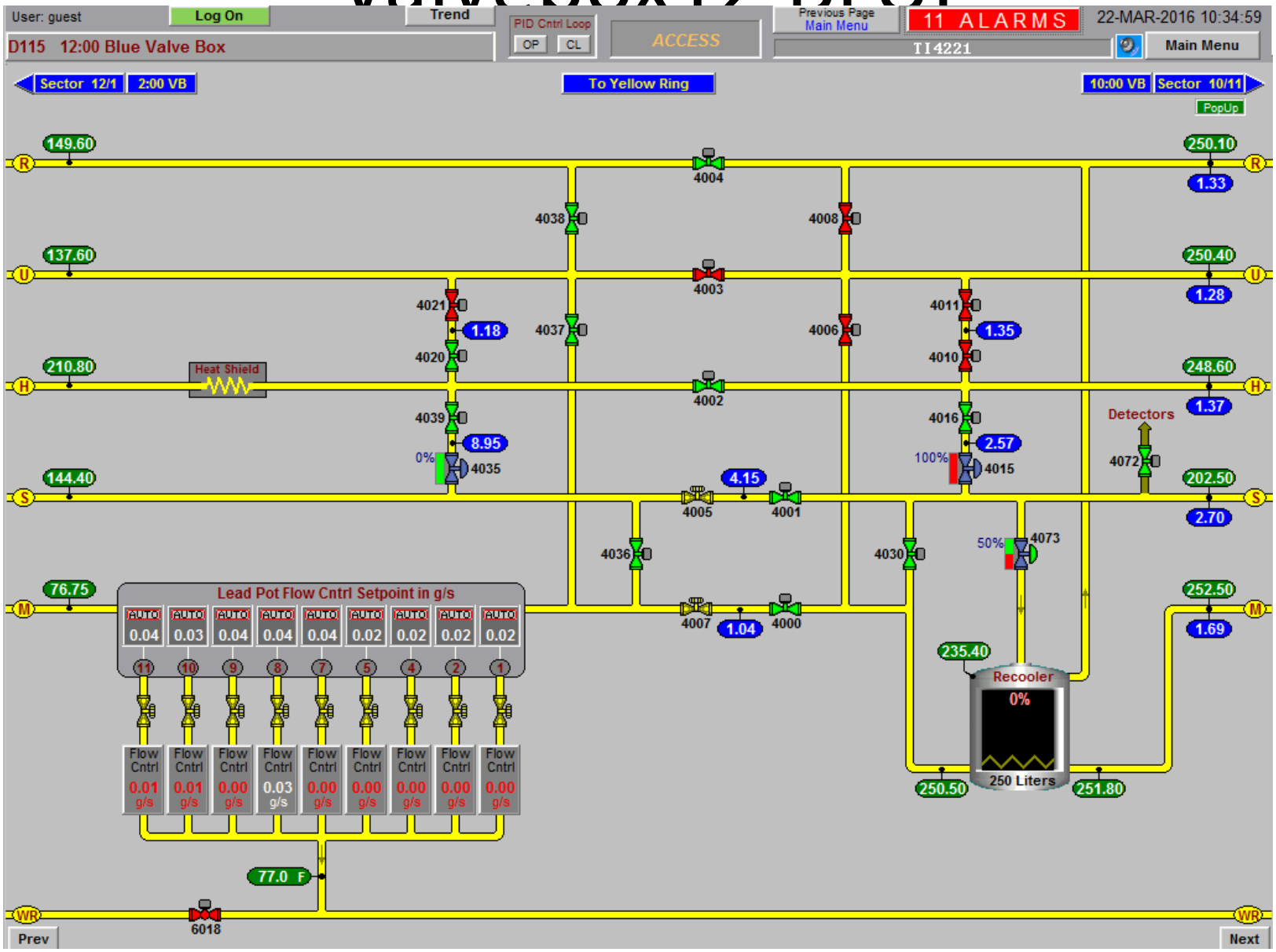

- Sextant At ~ 250K average
- Warmup complete Thursday morning
- LOTO in progress, about 40 valves