If you are using a printed copy of this procedure, and not the on-screen version, then you MUST make sure the dates at the bottom of the printed copy and the on-screen version match.
The on-screen version of the Collider-Accelerator Department Procedure is the Official Version.
Hard copies of all signed, official, C-A Operating Procedures are available by contacting the ESSHQ Procedures Coordinator, Bldg. 911A

9.1.15.a BLIP Target and Canning Record

Hand Processed Changes

HPC No.	Date	Page Nos.	Initials

Approved: _____***Signature with Date on File***_____
Collider-Accelerator Department Chairman Date

D. Beavis, S. Smith

Note 1: Uncontrolled copy printed from electronic master that is valid at time of printing. Always check that you have the latest revision of this document before use.

Note2: Leave no blanks. Indicate 'Not Applicable (N/A)', where appropriate.

Title and Preparer
LHC Collimator Material Irradiation at 200 MeV N. Simos

Instructions	
Description	**Page No.**
1. Overview [short summary of purpose of experiment; name of principle investigator and researcher involved]	4
2. Target Material and Properties – [Provide physical properties of each component/material to be irradiated]	5-9
3. Target Canning Process – [provide images or drawings and reference the OPM procedures for closing and opening of target can]	10
4. Beam Characteristics [define required beam on target and total current required]	11
5. Proposed Experiment [Provide general description of a) how target will be supplied BLIP, b) target array in box 1 and box 2; c) thermal analysis of target material and target can d) transport of irradiated target to TPL; target opening and processing at TPL and e) disposal of waste. List persons responsible for conducting each task. If others are required to assist in the research irradiation, define level of skill of staff and contact time.]	11
a. Procedure for Irradiation of Target Material BLIP [Summarize steps for experiment including specialist and contact hours required for task]	11
b. Target Array [Define proposed target array for box 1 and box 2 including SRIM calculated entry and exit energy for each layer. Provide physical dimension of degraders, target can, materials and water gaps]	11
c. Thermal Analysis of Target Materials and Target Can [Provide full description of data provide to specialist for calculations and any	12

	assumption made on material for calculations]	
	d. Transport and Processing at TPL [Provide full description of task involved and responsible persons and contact hours required]	12
	e. Disposal of waste. [describe waste to be generated and how it will be disposed of]	12
6.	**Activation Analysis of Target Material and Can** [Provide full list of radionuclide produced and quantities, references used for calculations, as well as decay profiles if the dose rates exceed limit for removal from BLIP hot-cell. Ensure Health Physics has reviewed data and confirms decay requirement if they are dose related. Attach analyses if any.]	13
	a. Radioactivity of each nuclide at end of bombardment (EOB), at 8 hours and 24 hours post EOB.	
7.	**Expected Dose Rate (e.g., R/h at 1 m)** [provide expected dose rate using *Microshield or equivalent* calculations for the combined and separate target and can irradiated. Provide expected dose rate at EOB at BLIP and expected dose rate when delivered to TPL]	14-17
8.	**Additional Safety Requirements** [address hazardous issues related to volatiles and or corrosive materials used and any additional equipment required for this experiment; hazardous materials information must be submitted to the C-AD ESSHQ Division Head for concurrence]	n/a
9.	**Special Operating Instructions and List of References or Supporting Documents**	n/a
10.	**Appendix** [provide additional support information as required]	20-43

1. Overview

This experiment is a continuation of the experiment conducted at the end of the FY2013 beam cycle.

As part of the LHC luminosity upgrade and the assessment of the radiation damage in the upgraded LHC collimating system materials. The experiment utilizes the 200 MeV, high current mode of the Linac which will allow for concurrent, undisturbed isotope production operations. Specifically, the 200-MeV energy will be precisely degraded through the LHC collimator material array to the desired energy of isotope production. In order to reach fluence levels that will reveal the performance of the proposed materials under radiation conditions and damage anticipated during the LHC following luminosity upgrade, it is estimated that about eight (8) weeks of operation at the fore mentioned Linac mode (200 MeV, ~100 µA) will be required to reach fluences that will be revealing changes that may occur in the physical and mechanical properties of the materials.

Completing this phase of the experiment is crucial due to the fact that key decisions, based on the results of this proposed experiment, must be made before the next run and while the LHC is in upgrade mode.

The following four materials are being evaluated:
1) Molybdenum-Graphite compound
2) Molybdenum
3) Glidcop
4) Copper-diamond

Table 1.1: Description of the LHC target materials irradiated at BLIP

Material Name	Density (g/cm3)	Element	Molar mass (g/mol)	Density (g/cm^3)	%W	Atomic fraction %	Average Atomic Number Z
Molybdenum	10.2	Mo	95.94	10.22	100%	100.000%	42
Glidcop AL-15	8.9	Cu	63.546	8.93	99.70%	99.813%	
		Al_2O_3	101.9633	3.96	0.30%	0.187%	29.03931
CuCD	5.4	Cu	63.546	8.93	0.62057	23.590%	
		B	10.811	2.34	0.00417	0.932%	
		CD	12.01	3.51	0.375261	75.478%	11.41645
MoGRCF	3.7	Mo	95.94	10.22	74.60%	21.515%	
		GR	12.01	2.25	24.80%	78.485%	13.74528

Material	Unit	Mo	Glidcop	CuCD	MoGRCF
Density	[kg/m3]	10220	9800	5400	3700
Atomic Number (Z)		42	29	11.4	13.7
Melting Temperature	[°C]	2623	1083	1083	2505
Thermal Conductivity	[W/mK]	138	365	490	320
CTE	[E-6K-1]	5	16.6	7	6.798004
Specific Heat	[J/kGK]	251	391	420	574.06
Young's Modulus	[GPa]	330	130	220	78.6
Tensile Strength	[MPa]	660	413	70	34.98
Poisson's Ratio		0.356	0.326	0.3	0.19
Electrical Conductivity	[MS/m]	19.2	53.8	12.6	1
Radiation Length X0	[cm]	0.983	1.474	4.78	8.134
SSNI	[kWm2/kg]	2.6	21.98795181	70	47.07264
TSNI	[kJ/kg]	55	50.43537627	13.36363636	30.44095
Bulk Modulus		381.9444444	124.5210728	183.3333333	42.25806

Following irradiation at BLIP and cooling time sufficient for transport to Building 801 hot cells, the target array will be transported to the TPL hot cells by standard procedures. In the hot cell the target capsules will be opened, the enclosed specimens will be removed,

Of primary interest for the 200-MeV proton irradiation and for fluences reaching 5.0×10^{20} p/cm^2 (achieved in 8-9 weeks at 100 µA at BLIP) will be the changes induced on key physio-mechanical properties that include (a) resistivity, (b) thermal conductivity, (c) dimensional changes and thermal expansion, (d) stress-strain behavior and ductility loss and (e) thermal annealing characteristics, all crucial parameters for the LHC collimation operation.

The comprehensive post-irradiation analyses will be conducted at the BNL Hot Material Test Facility that is equipped with the appropriate instrumentation and facilities to extract radiation damage information from the proposed material array.

To address the different aspects of the irradiation experiment, the following codes/versions were utilized:

Transport codes for beam energy degradation/energy deposition/activation and dose:

SRIM - Version 2008.04

MCNPX Version 2.6.0

CINDER'90 Version 07.4.2

FLUKA-2012

Thermo-mechanical analysis and modelling/meshing

LS-DYNA - Version 9.71

TrueGrid Version 2.3.4 (meshing software)

2. Target Material and Properties

Target Name:	*Moly_LHC_1&2*	**Target & Canning No.** *Assign unique no.* (2013-001/002)	**NOTE: Two identical Molybdenum containing target capsules are part of the array**

Target Material Properties (Molybdenum)				
Purity or Grade	99.5%			
Chemical Formula	Mo			
Physical Characteristics at 70 °F or 21 °C	**Grey to black metal, odorless, tasteless**			
Physical Form	**Foil**	**yes**	**Powder**	**no**
	Diameter (inches/mm)	**2.375/60.325**	**Pressed (Torr)**	**n/a**
Elements (%)	**Mo (100%)**			
Melting Point	**2623**	**°C**	**4753.4**	**°F**
Boiling Point	**n/a**	**°C**	**n/a**	**°F**
Thermal Conductivity	**138W.m^{-1}.K^{-1}**	**Temperature dependence**	***(if available)* n/a**	
Density	**10.22**		**g/cm^3**	
Specific Heat	**251**		**J/kg.K**	

Target Material Reactions / Properties						
Does the Target material react with any of the following?	**Aluminium**	**no**	**Air**	**no**	**CO_2**	**no**
	H_2O	**insoluble**	**Lead**	**no**	**Zinc**	**no**
	Inconel 600	**no**	**S/Steel**	**no**	**Copper**	**no**

Canning Material Properties				
Chemical Formula	**304 Stainless Steel [Fe (0.67095), Chromium (0.185) Nickel (0.1125) Cr (0.112), Magnesium (0.02) Silicon]**			
Can Wall Thickness (inches/mm)	**0.012/0.3048**			
Can Dimensions (inches/mm)	**Can Diameter 2.75/69.9 Can Width 0.1421/3.6096**			
Melting Point	**1424**	**°C**	**2595.2**	**°F**
Thermal Conductivity	**W.m^{-1}.K^{-1}** **16.2**	**Temperature dependence**	*(if available)* **16.2@100^{0}C, 21.4@500^{0}C**	
Density	**8**	**g/cm^3**		

Specific Heat	**500**	**J/kg.K**

Target Capsule #3 - Glidcop

Target Name:	*Glidcop_LHC*	**Target & Canning No.** *Assign unique no*. (2013-003)	

Target Material Properties (Molybdenum)

Purity or Grade	99.5%			
Chemical Formula	**Glidcop AL-15**			
Physical Characteristics at 70 ^{o}F or 21 ^{o}C	**Golden metal, odorless, tasteless, shiny**			
Physical Form	**Foil**	**yes**	**Powder**	**no**
	Diameter (inches/mm)	**2.375/60.325**	**Pressed (Torr)**	**n/a**
Elements (%)	Copper 99.813% , Al_2O_3 0.187%			
Melting Point	**1083**	**^{o}C**	**1981**	**^{o}F**
Boiling Point	**4790**	**^{o}C**	**8654**	**^{o}F**
Thermal Conductivity	**365 W.m^{-1}.K^{-1}**	**Temperature dependence**	***(if available)* n/a**	
Density	**8.93**		**g/cm^3**	
Specific Heat	**391**		**J/kg.K**	

Target Material Reactions / Properties

Does the Target material react with any of the following?	**Aluminium**	**no**	**Air**	**no**	**CO_2**	**no**
	H_2O	**insoluble**	**Lead**	**no**	**Zinc**	**no**
	Inconel 600	**no**	**S/Steel**	**no**	**Copper**	**no**

Canning Material Properties

Chemical Formula	**304 Stainless Steel**			
Can Wall Thickness (inches/mm)	**0.012/0.3048**			
Can Dimensions (inches/mm)	**Can Diameter 2.75/69.9 Can Width 0.1421/3.6096**			
Melting Point	**1424**	**^{o}C**	**2600**	**^{o}F**
Thermal Conductivity	**W.m^{-1}.K^{-1}** **16.2**	**Temperature dependence**	*(if available)* **16.2@100^{0}C, 21.4@500^{0}C**	
Density	**8.0**	**g/cm^3**		
Specific Heat	**500**		**J/kg.K**	

Target Capsule #4 – Molybdenum-Graphite			
Target Name:	*MoGr_LHC*	**Target & Canning No.** *Assign unique no.* (2013-004)	

Target Material Properties (Molybdenum-Graphite)				
Purity or Grade	99.5%			
Chemical Formula	Mo-GR			
Physical Characteristics at 70 °F or 21 °C	**Grey to black metal, odorless, tasteless**			
Physical Form	**Foil**	**yes**	**Powder**	**no**
	Diameter (inches/mm)	**2.375/60.325**	**Pressed (Torr)**	**n/a**
Elements (%)	**Mo 21.515%, 78.485% Graphite**			
Melting Point	**2505**	**°C**	**4541**	**°F**
Boiling Point	**n/a**	**°C**	**n/a**	**°F**
Thermal Conductivity	**320 $W.m^{-1}.K^{-1}$**	**Temperature dependence**	***(if available)* n/a**	
Density	**3.7**		**g/cm^3**	
Specific Heat	**574**		**J/kg.K**	

Target Material Reactions / Properties						
Does the Target material react with any of the following?	**Aluminium**	**no**	**Air**	**no**	**CO_2**	**no**
	H_2O	**insoluble**	**Lead**	**no**	**Zinc**	**no**
	Inconel 600	**no**	**S/Steel**	**no**	**Copper**	**no**

Canning Material Properties				
Chemical Formula	**304 Stainless Steel**			
Can Wall Thickness (inches/mm)	**0.012/0.3048**			
Can Dimensions (inches/mm)	**Can Diameter 2.75/69.9 Can Width 0.1815/4.6096**			
Melting Point	**1424**	**°C**	**2600**	**°F**
Thermal Conductivity	**16.2 $W.m^{-1}.K^{-1}$**	**Temperature dependence**	*(if available)* **16.2@100°C, 21.4@500°C**	
Density	**8**	**g/cm^3**		
Specific Heat	**500**		**J/kg.K**	

Target Capsule #5: Copper Diamond			
Target Name:	*CuCD_LHC*	**Target & Canning No.** *Assign unique no*. (2013-005)	

Target Material Properties (Molybdenum)				
Purity or Grade	99.5%			
Chemical Formula	Cu-CD			
Physical Characteristics at 70 °F or 21 °C	**Grey to black metal, odorless, tasteless**			
Physical Form	**Foil**	**yes**	**Powder**	**no**
	Diameter (inches/mm)	**2.375/60.325**	**Pressed (Torr)**	**n/a**
Elements (%)	**Copper (23.590%), Diamond (75.458%), Boron (0.932%)**			
Melting Point	**1083**	**°C**	**1981**	**°F**
Boiling Point	**n/a**	**°C**	**n/a**	**°F**
Thermal Conductivity	**490 $W.m^{-1}.K^{-1}$**	**Temperature dependence**	***(if available)* n/a**	
Density	**5.4**		**g/cm^3**	
Specific Heat	**420**		**J/kg.K**	

Target Material Reactions / Properties						
Does the Target material react with any of the following?	**Aluminium**	**no**	**Air**	**no**	**CO_2**	**no**
	H_2O	**insoluble**	**Lead**	**no**	**Zinc**	**no**
	Inconel 600	**no**	**S/Steel**	**no**	**Copper**	**no**

Canning Material Properties				
Chemical Formula	**304 Stainless**			
Can Wall Thickness (inches/mm)	**0.012/0.3048**			
Can Dimensions (inches/mm)	**Can Diameter 2.75/69.9 Can Width 0.1815/4.6096**			
Melting Point	**1424**	**°C**	**2600**	**°F**
Thermal Conductivity	**16.2 $W.m^{-1}.K^{-1}$**	**Temperature dependence**	*(if available)* **16.2@100°C, 21.4@500°C**	
Density	**8.0**	**g/cm^3**		
Specific Heat	**500**		**J/kg.K**	

3. Target Canning Process

Blueprints: attached in Appendix 4

General considerations:

The target capsule or can containing the different types of material specimens is made of 304 stainless steel and it is identical in design with the target cans used for the rubidium chloride targets.

It consists of three parts, the outer rim and the two windows which are welded under vacuum at the outside company EB Industries used for all the isotope-producing target fabrication.

The windows are 0.012" (0.3048mm) thick each and the inside width of the target capsule varies between 0.1181" (3mm) and 0.1575" (4mm) depending on the target capsule. Specifically, three of the target capsules (Mo_1, Mo_2 and Glidcop) are based on 3mm inside capsule width and two (Mo_GR and Cu_CD) are based on 4mm inside capsule width.

Can Outside Diameter (in/mm): 2.75/69.9

Can Inside Diameter (in/mm): 2.375/60.325

3mm Can Width (in/mm): 0.1421/3.6096

4mm Can Width (in/mm): 0.1815/4.6096

The vacuum degrader in position 1 of the array has outside diameter 2.75"/69.9mm, inside diameter 2.375"/60.325mm and stainless steel windows of thickness 0.012" (0.3048mm) for both ends.

Canning Process:

1. The back window of the target capsule is welded onto the capsule rim
2. The solid specimens of each target material type are arranged in a tight and specific arrangement (see attached Figure) within the volume of the capsule
3. The target capsule containing the target material is sent to the vendor (EB Industries) where the front window is welded under vacuum.
4. Vacuum leak tests are performed at the vendor prior to being shipped back to BNL and also at the BNL shops upon arrival.

   The fabricated and leak checked target capsules are given to the BLIP staff along with instructions of the layout into the irradiation target box. The layout of the array is based on precise proton beam degradation calculations.

4. Beam Characteristics		
Maximum Instantaneous Current Desired	**40**	**mA**
Average Current Desired	**90-110**	**µA**
Total Integrated Current Desired	**50,000**	**µA - hrs**
Maximum Proton Energy on Target Material	**195**	**MeV**

5. Experiment Description

5.a Procedure for irradiation of LHC target array material in BLIP:

The array to be irradiated has already completed 4 ½ weeks of irradiation under the same BLIP beam parameters during the FY13 run. The FY13 irradiation paused with end of the run on July 31 2013. The irradiated array has been placed in the shielding box within the hot cell at BLIP where it has been cooling down for the last 5 ½ months. The array, exactly as it was left at the end of FY13 irradiation will be lowered into position in the Box1 with the isotope target array in Box2.

At the end of the 3-week irradiation, the target array will be lifted to the hot cell level and placed into the shielding box for a period of two (2) months to allow for sufficient cool-down. At the end of the cooling period the five target capsules (two Mo, one Glidcop, one Cu-CD and one Mo-GR) will be transported to the main hot cell of Building 801 by BLIP staff.

There, the target capsules will be opened one by one, and each opened capsule (body with the lower window as well as the target specimens within it) will be transported into the hot cell in Rm 66 through the special chute where each specimen will be sorted and placed in a numbered vial (sorting will be done by N. Simos). Following sorting of all the target specimens, post-irradiation analysis will be performed within the two hot cells

5.b LHC Target array in Box 1 (upstream) and Box 2 (downstream):

The target and degraders in Box 1 as well as the water cooling gaps have been selected to ensure that the energy in the Box-2 array containing the RbCl targets is unchanged by going to the 200 MeV beam energy that is required. Extensive analyses conducted independently and using three (3) different codes for energy degradation (FLUKA, MCNPX and SRIM) were in agreement on the energy profile across the two arrays.

5.c Thermal analysis of target material and target can (attach analyses if any):

A detailed thermo-mechanical analysis of the LHC target array was performed using energy depositions across the array that were produced by three (3) independent studies that were in excellent agreement (FLUKA, MCNPX and SRIM). A detailed finite element model using the capabilities of the LS-DYNA numerical code was performed based on most conservative scenarios.

Shown in Appendix 2 are excerpt results of the conducted analyses on the targets and the can.

As shown in Appendix 2, and for the worst case scenario which is the response of the target capsule containing the Molybdenum specimens, the temperatures and stresses in the capsule stainless steel windows are of the order of ~450K which is far below the melting point of steel.

Confirmation of the predicted values of temperature and stress which predict that all the target capsules are safe under the BLIP operating conditions, is the fact that the target array has been bombarded with the same proton beam at BLIP for a period of 4 ½ weeks during the FY2013 run.

5.d Transport of irradiated target to TPL, target opening and processing:

Following irradiation the LHC target array which consists of two degraders (one vacuum degrader and one solid stainless steel disk) and 5 target-containing capsules under vacuum (two identical Mo targets, one Glidcop, one Molybdenum-Graphite and one Copper-Diamond) will remain at BLIP for appropriate cool-down to allow for transportation of the five target capsules to the hot cells of Building 801. The two beam degraders will remain at BLIP to be available for use in future experiments.

5.e Disposal of waste:

Al target body will be disposed with other target bodies as solid non compactable waste as per CAD OPM 19.3.5.6 & 19.3.5.7.

6. Activation Analysis of Target Material and Can

Activation of the entire LHC target array consisting of (a) two molybdenum capsules, (b) one Glidcop capsule, (c) on Mo-Graphite capsule and (d) one Copper-Diamond capsule was calculated using two different codes, MCNPX and FLUKA codes.

The MCNPX code, in conjunction with the CINDER90 library, produced activities and isotopes for a continuous 9-week irradiation at BLIP. The FLUKA code produced activity and isotopes for the exact irradiation pattern (i.e. 4.5 weeks of irradiation in FY2013, cool-down period to January 2014 and 3-week irradiation starting in January 2014). The MCNPX/CINDER90 analyses were performed by Hans Ludewig and Arnold Aronson of the Nuclear Science and Technology Department of BNL.

A detailed list of the activities associated with the LHC irradiated array at BLIP and the isotopes is included in **Appendix 3.** Specifically, activity results are listed for EOB, one (1) day of decay and 120 days of decay.

Similarly activation results using the FLUKA model and decay analysis were generated at EOB, 1 hour, 24 hours, 1 week, 1 month and 4 months following EOB. The FLUKA analyses were performed by N. Simos (BNL) and L. Lari of CERN. Excerpt results are also shown **in Appendix 3**.

For a detailed description see Appendix 3

Decay Requirements

Decay analyses using the capabilities of the FLUKA code were performed following the exact irradiation and decay path of the experiment and taking into consideration the shielding specifics that exist at BLIP and of the transport process in order to determine decay requirements prior to array transport from BLIP to Building 801 Hot Cells.

Specifically, the irradiation-decay process considered the 4 ½ month irradiation of the array performed until the end of FY2013 run (ended July 31st 2013), the 5 ½ decay period while the array is inside the BLIP hot cell, the 3-week irradiation in FY2014 run and finally the decay period following EOB of the remaining 3-week irradiation.

The decay requirements at BLIP were based on the shielding capabilities of (a) the BLIP hot cell shielding walls and the additional shielding provided by the storage box within the BLIP hot cell and (b) the shielding capacity of the transport pig required for transfer to Bldg. 801 Hot Cells.

Analytical models were used to consider all the scenarios and the decay profile of the LHC irradiated array.

a. Decay analyses/requirements for the irradiated array following EOB at the BLIP hot cell were deduced with and without the auxiliary shielding provided by the 4” wall of the storage box. Based on the results (some of them shown in Figures 7.1 – 7.3) of the analyses , the irradiated array may be placed in target Box2 after EOB and remain in the drive shaft for ~6 hours before it is retrieved up to the hot cell and placed within the auxiliary storage box.

b. For transport of the irradiated array (only the five target capsules and not the supports and the two beam degraders) a special decay/dose analysis was performed. Specifically the 6-inch lead wall of the transport pig was considered (conservative analysis since the additional shielding provided by the 0.25" steel lining inside and outside of the lead pig was not accounted for). Based on effective dose outside the pig, the decay period required was determined. Specifically, **a month of decay** inside the BLIP hot cell was determined to be sufficient before the irradiated LHC target array can be transported to Building 801.

7. Expected Dose Rate

Dose calculations were performed using two different models, namely MCNPX and FLUKA.
For the MCNPX calculations, nine (9) continuing weeks of irradiation were assumed.

Given the actual irradiation profile (4.5 weeks at the end of FY13 run augmented by a 3-week irradiation during the FY14 run) the FLUKA-based calculations considered the exact irradiation pattern which consists of (a) 4.5 weeks of irradiation at the end of FY2013 run (EOB on July 31, 2013), (b) cool-down phase to ~ January, 20 2014 and (c) 3-week irradiation starting January 20, 2014. (FLUKA analysis results are shown in Appendix 3).

Activation of the entire LHC target array consisting of (a) two molybdenum capsules, (b) one Glidcop capsule, (c) on Mo-Graphite capsule and (d) one Copper-Diamond capsule was calculated using two different codes, MCNPX and FLUKA codes.

The MCNPX code, in conjunction with the CINDER90 library, produced activities and isotopes for a continuous 9-week irradiation at BLIP. The FLUKA code produced activity and isotopes for the exact irradiation pattern (i.e. 4.5 weeks of irradiation in FY2013, cool-down period to January 2014 and 3-week irradiation starting in January 2014). The MCNPX/CINDER90 analyses were performed by Hans Ludewig and Arnold Aronson of the Nuclear Science and Technology Department of BNL. A detailed list of the activities associated with the LHC irradiated array at BLIP and the isotopes is included in Appendix 3. Specifically, activity results are listed for EOB, one (1) day of decay and 120 days of decay.

The FLUKA model and decay analysis produced activation results of EOB, 1 hour, 24 hours, 1 week, 1 month and 4 months following EOB. The FLUKA analyses were performed by N. Simos (BNL) and L. Lari of CERN. Excerpt results are also shown in Appendix 3.

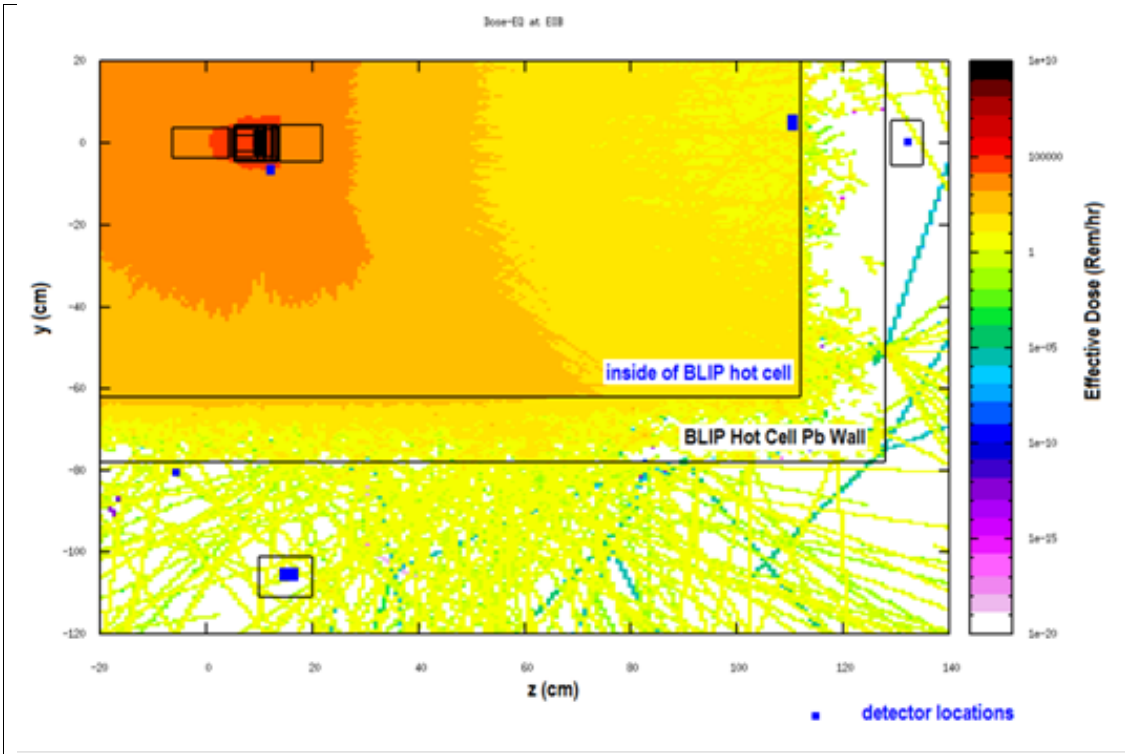

Fig 7.1: Effective dose profile from the LHC target array retrieved to BLIP hot cell above after EOB

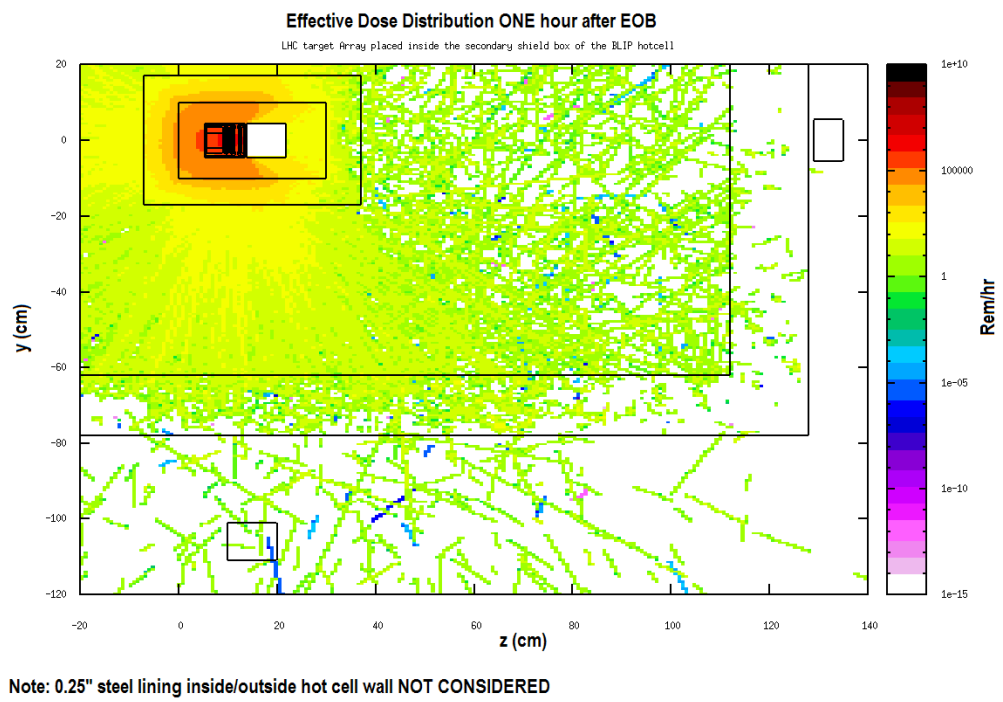

Fig 7.2: Effective dose profile from the LHC target array retrieved to BLIP hot cell above and placed inside the shielded box one hour after EOB

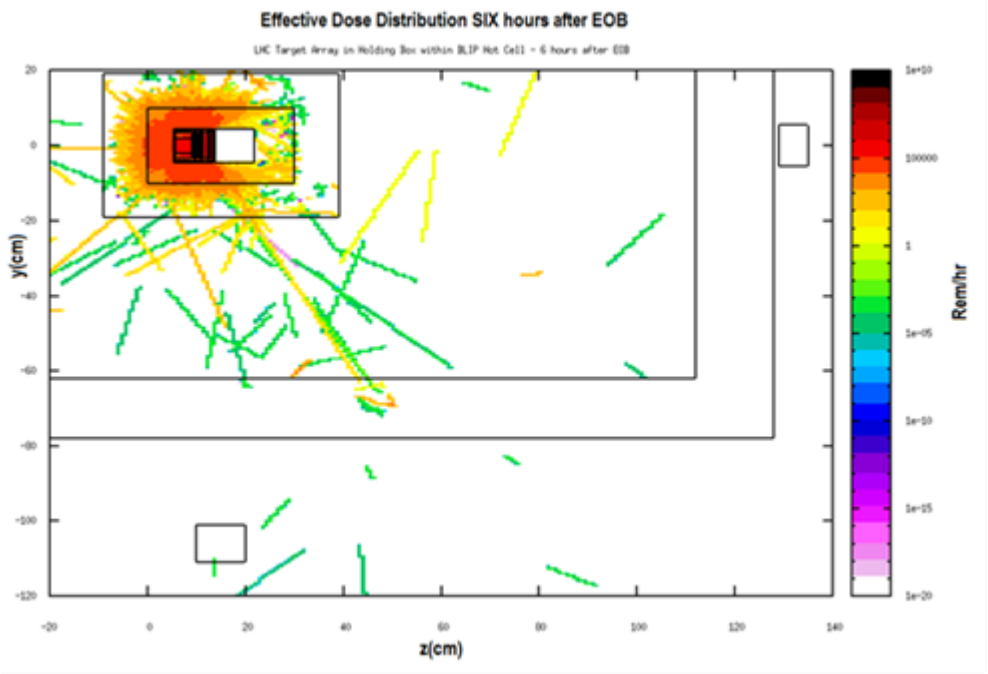

Fig 7.3: Effective dose profile from the LHC target array retrieved to BLIP hot cell above and placed inside the shielded box SIX hours after EOB

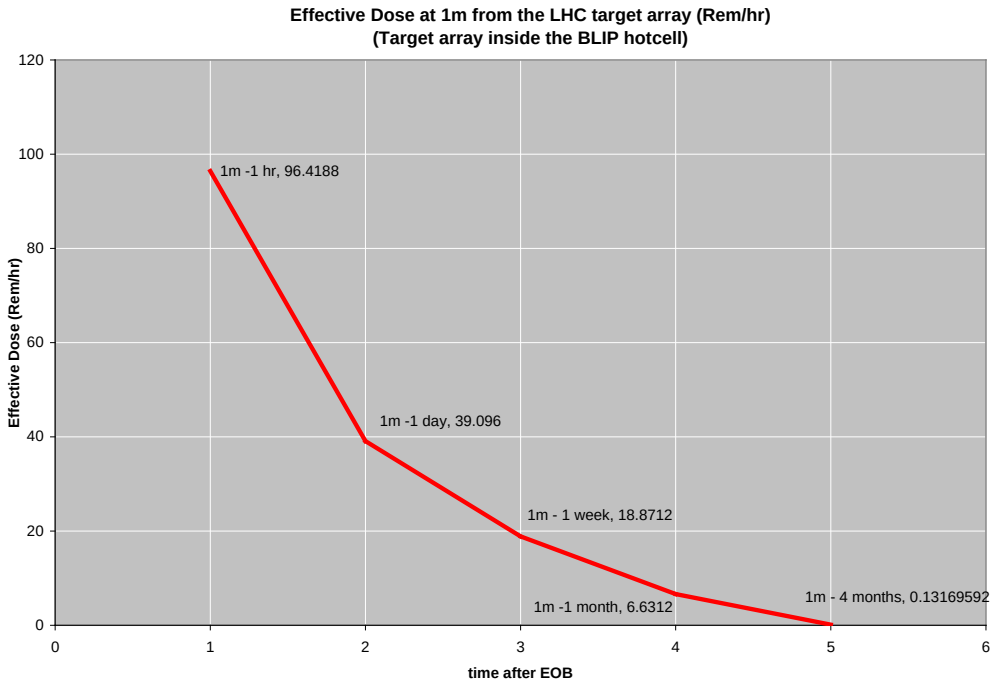

Figure 7.4. Time evolution of the dose rate of the LHC irradiated array. No shielding between the detector at 1m and the source is assumed (both source and detector inside the hot cell)

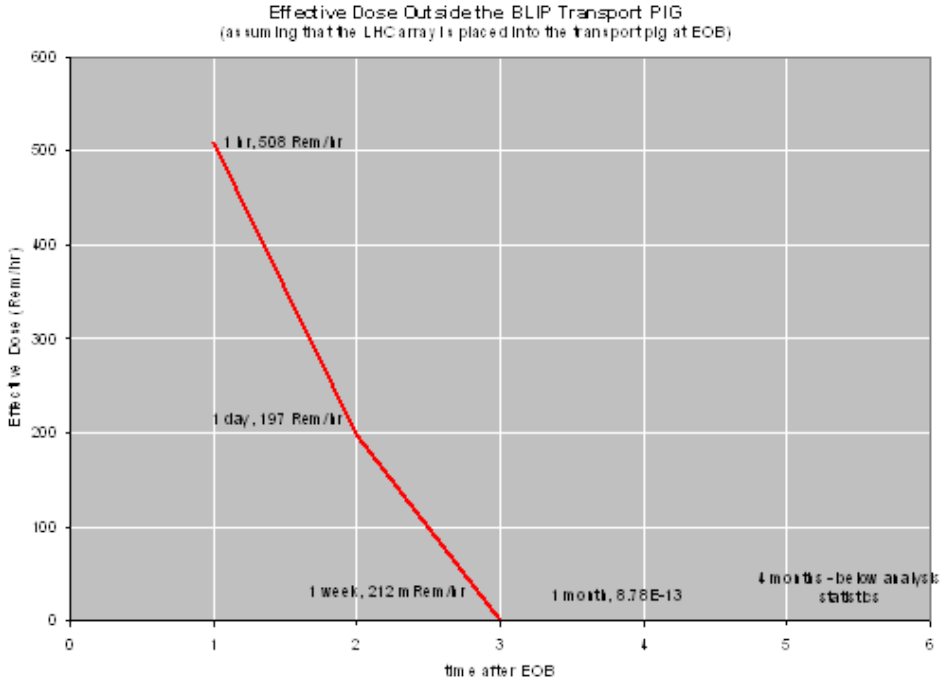

Figure 7.5 Time evolution of the dose rate outside the transport pig (contact with outside pig wall of 6” Pb thickness)

8. Additional Safety Requirements
N/A

9. Special Operating Instructions	
N/A	
Supporting Documentation	
References	
OPMs	19.2.22, 19.3.5.6, 19.3.5.7, 19.4.5.2, 19.4.5.3.
Drawings	D25-M-3460 D25-M-3462 D25-M-3463 D25-M-3465 D25-M-3466 D25-M-3467 D25-M-3468 D25-M-3469 D25-M-3470 D25-M-3471 D25-M-3472 D25-M-3473 D25-M-3475

Appendix 1 – Proton Energy Profile

A detailed SRIM model consisting of 45 distinct layers and encompassing the target arrays in Box1 and Box2 along with the water gaps, the capsule windows and the capsule contents was used to assess the proton energy degradation. The INPUT model file describing the complete model is included as Appendix 1_supplement.

Table A.1.1 lists the proton energy profile over each layer along with all pertinent information.

Table A1.1 Proton Energy Profile for LHC target Array at 200 MeV: RbCl target array in downstream box

	Energy: 200.3 MeV						
	Layer	**Material**	**Density g/cc**	**Thickness (inches)**	**Thickness mm**	**Ei, MeV**	**E_out (MeV)**
	Be window	Beryllium	1.85	0.012	0.3048	200.30	200.064
	AlBeMet window	AlBeMet	2.10	0.012	0.3048	200.064	199.8134
	Beamline window	stainless steel	8.00	0.031	0.787	199.86	197.8825
	water gap	water	1.00	0.106	2.68	197.96	196.5392
Box 1 (LHC target Array)	upstream box window	stainless steel	8.00	0.020	0.508	196.65	195.339
	water gap	water	1.00	0.100	2.54	195.43	194.0587
	Vacuum Degrader	stainless steel	8.0	0.012	0.3048	194.29	193.3423
		Vacuum					
		Stainless steel	8.0	0.012	0.3048	193.3423	192.6068
	Cooling Channel	water	1.0	0.080	2.0	192.6068	191.5547
	Mo_1 Window-IN	Stainless	8.0	0.012	0.3048	191.5547	190.8318
	Mo_1 Target	Mo	10.22	0.120	3.0	190.8318	181.8617
	Mo_1 Window-OUT	Stainless	8.0	0.012	0.3048	181.8617	181.0802
	Cooling Channel	water	1.0	0.080	2.0	181.0802	179.9874
	Mo_2 Window-IN	Stainless	8.0	0.012	0.3048	179.9874	179.2247
	Moly target	Mo	10.2	0.120	3.0	179.2247	169.618
	Mo_2 Window-OUT	Stainless	8.00	0,012	0.3048	169.618	168.845
	Cooling Channel	water	1.00	0.080	2.0	168.845	167.733
	Glidcop Window-IN	Stainless	8.00	0.012	0.3048	167.733	166.934
	Glidcop	Glidcop	8.9	0.120	3.0	166.934	157.709
	Glidcop Window-OUT	Stainless	8.0	0.012	0.3048	157.709	156.846
	Cooling Channel	water	1.00	0.120	3.0	156.846	155.147
	Mo-GR Window-IN	Stainless	8.0	0.012	0.3048	155.147	154.347
	Mo-Graphite	MoGR	3.7	0.160	4.0	154.347	149.054
	Mo-GR Window-OUT	Stainless	8.0	0.012	0.3048	149.054	148.199
	Cooling Channel	water	1.00	0.280	7.0	148.199	144.178
	Steel Degrader	Stainless	8.0	0.120	3.0	144.178	134.681
	Cooling Channel	water	1.00	0.120	3.0	134.681	132.759
	Cu-D Window-IN	Stainless	8.0	0.012	0.3048	132.759	131.874

	Copper-Diamond	Cu-CD	5.4	0.160	4.0	131.874	122.471
	Mo-GR Window-OUT	Stainless	2.7	0.012	0.3048	122.471	121.492
	Water Gap	water	1.0	0.060	1.5	121.492	120.455
	upstream box window	stainless steel	8.00	0.020	0.508	120.455	118.9286
	water gap between box windows	water	1.00	0.150	3.82	118.9286	116.152
	Downstream box front window	stainless steel	8.00	0.020	0.508	116.152	114.483
Box 2 (downstream)	cooling channel	water	1.00	0.200	5.08	114.483	110.817
	Vacuum Degrader	stainless steel	8.00	0.029	0.737	110.817	108.243
		vacuum	0.00	0.596	15.14	108.243	108.243
		stainless steel	8.00	0.029	0.737	108.243	105.381
	cooling channel	water	8.00	0.200	5.08	105.381	98.36242
	can window	inconel	8.43	0.012	0.3048	98.36242	**97.779**
	RbCl salt	**RbCl**	**2.38**	**0.645**	**16.38**	**97.779**	**76.6987**
	can window	inconel	8.43	0.012	0.3048	76.6987	76.414
	cooling channel	water	1.00	0.200	5.08	76.414	66.863
	can window	inconel	8.43	0.012	0.3048	66.863	66.30338
	RbCl salt	**RbCl**	**2.38**	**0.500**	**12.7**	**66.30338**	**41.23**
	can window	inconel	8.43	0.012	0.3048	41.23	40.6903
	cooling channel	water	1.00	0.200	5.08	40.6903	30.233
	Beam stop	Cu	8.96	0.220	5.59	30.233	stop
	cooling channel	water	1.00	0.200	5.08		0.00

Appendix 2

Thermal analysis

See attached File from 2013 Safety Review

Analysis Performed on Target Capsules based on estimated by SRIM/MCNPX/FLUKA energy deposition estimates. The estimates of the deposited energy generated by the three (3) different approaches where in excellent agreement. The thermo-mechanical analysis was performed using the LS-DYNA Version 9.71 code along with the finite element meshing software TrueGrid Version 2.3.4. Analysis performed by N. Simos	Excerpt details of the comprehensive finite element analysis are attached
Irradiation Experiment Conditions LINAC Beam Proton Energy: 200.3 MeV Linac Beam Current: 100 uA 100% beam on target array 0.080-inch and 0.120-inch water gaps between target capsules ensured by the special holders supporting each capsule in the array.	Summary & Conclusions The peak temperatures experienced by the target capsule windows are ~ 450K and thus significantly below the melting point of stainless steel. Therefore the encapsulation is safe. Furthermore, the array has been exposed to 4 ½ weeks of bombardment uder the same conditions and the target capsules and their encapsulation performed their function safely.

Thermo-Mechanical Analysis

This section contains excerpt results of a comprehensive finite element analysis. It depicts results for the vacuum degrader and for the Molybdenum target capsule which experiences the highest thermal loads. Analysis results of all target capsules are available and can be provided upon request.

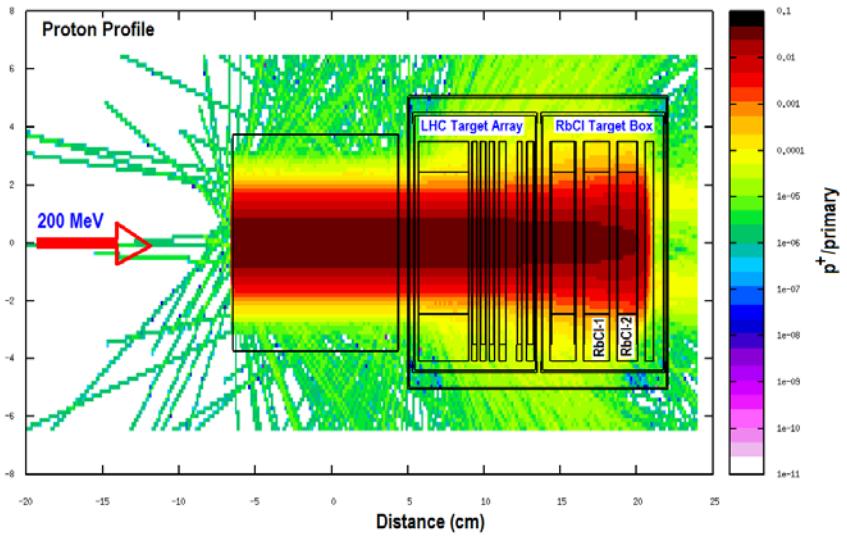

Figure A2.1: Proton profile with the LHC target array in Box1 and isotope target array in Box2

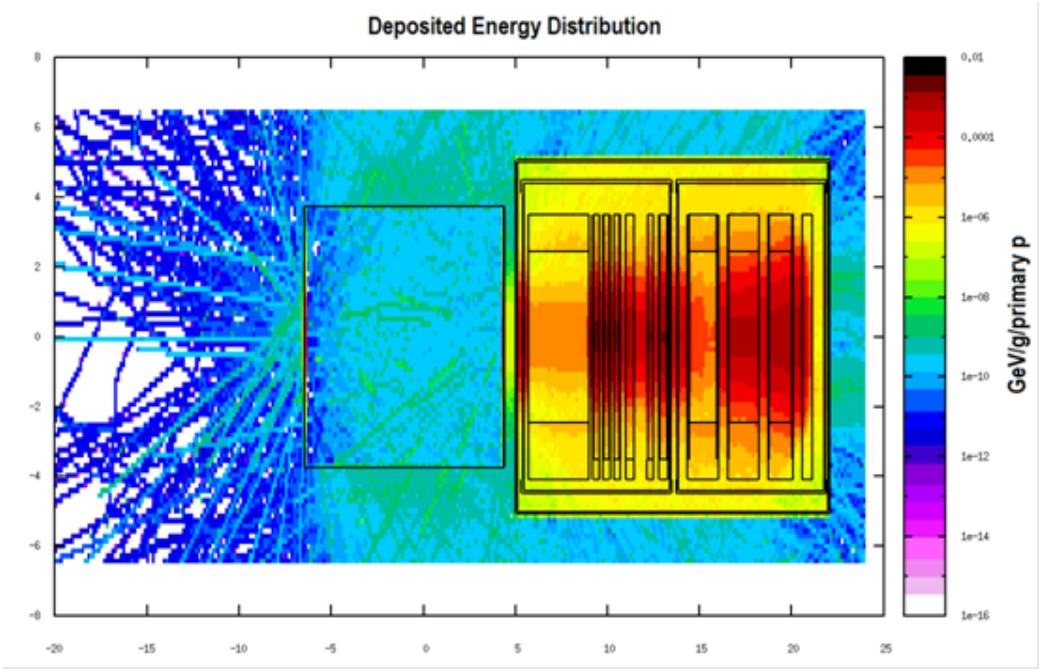

Figure A2.2: Deposited energy distribution profile with the LHC target array in Box1 and isotope target array in Box2

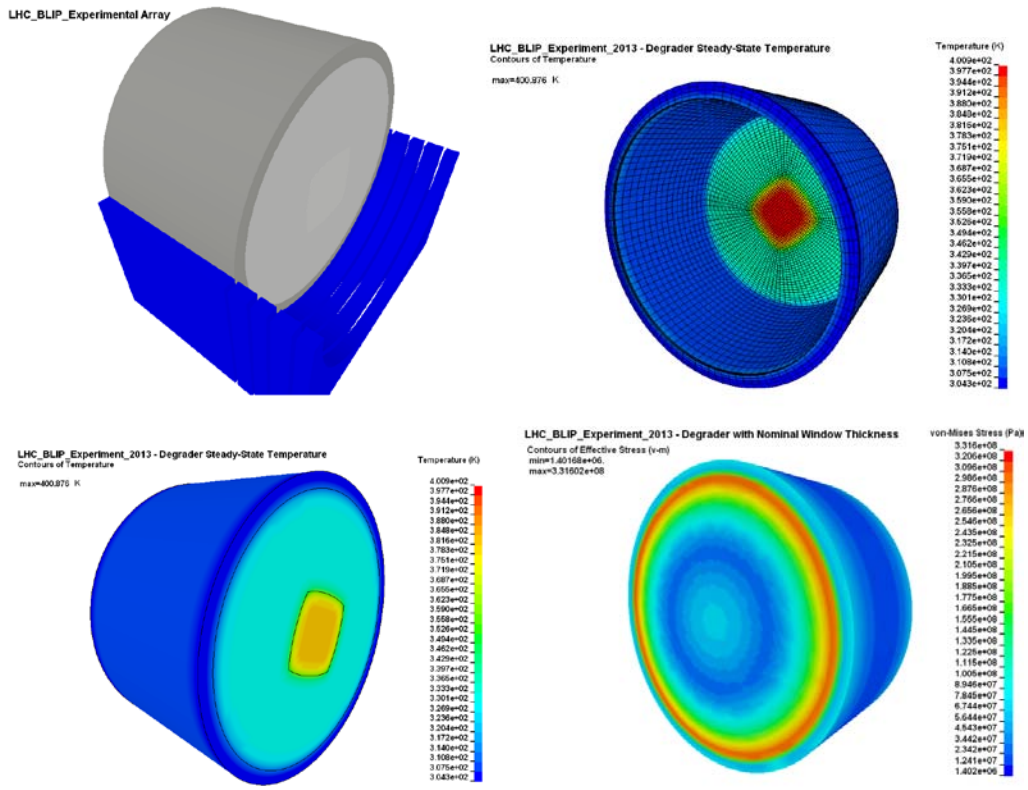

Figure A2.3: Thermo-mechanical analysis of Box1 Vacuum Degrader with 0.012” thick windows

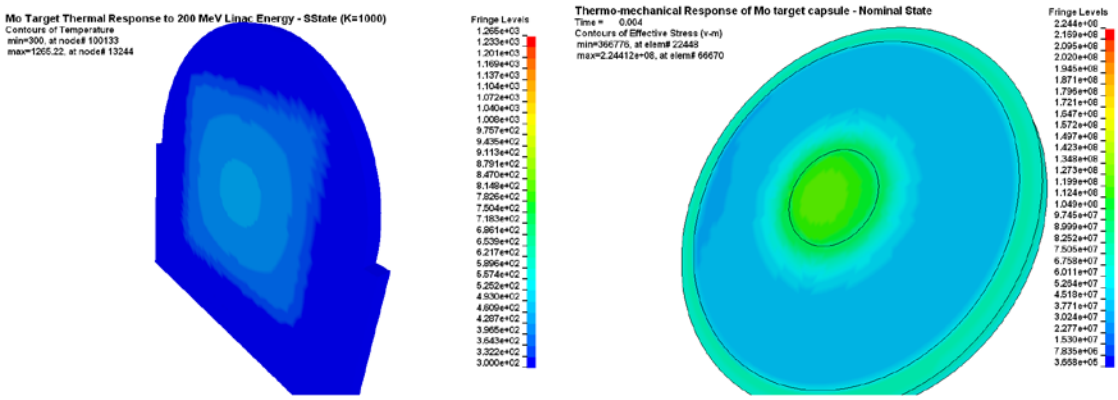

Figure A2.4: Molybdenum Target Capsule Thermo-mechanical Response

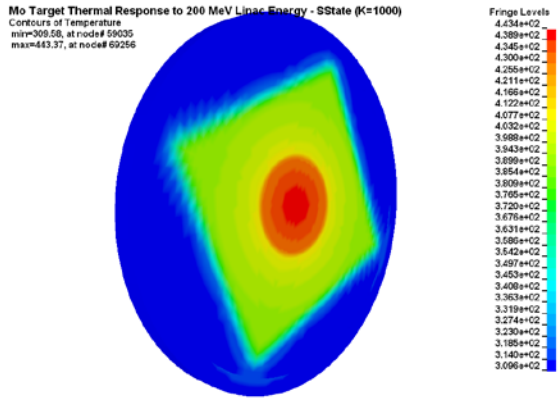

Figure A2.5: Temperature experienced by the 304 Stainless Window (0.012”) of Mo Target Capsule Temperature (K)

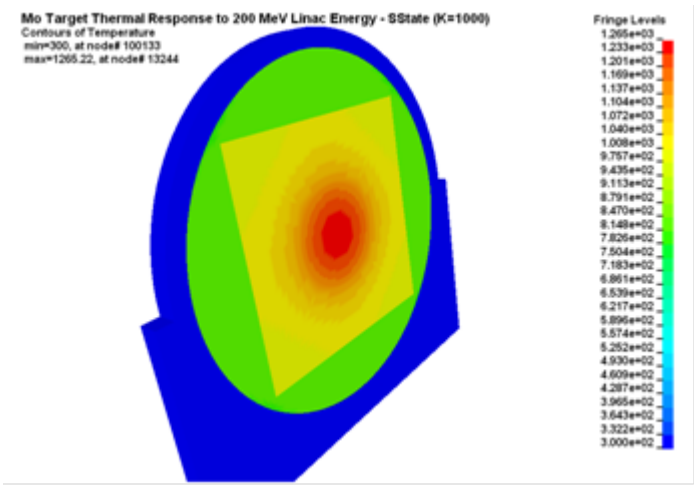

Figure A2.6: Temperature experienced by the Mo Target Capsule contents (Mo specimens) - Temperature (K)

Appendix 3

Dose and Activation analysis of LHC Target Array using FLUKA and MCNPX Monte Carlo codes

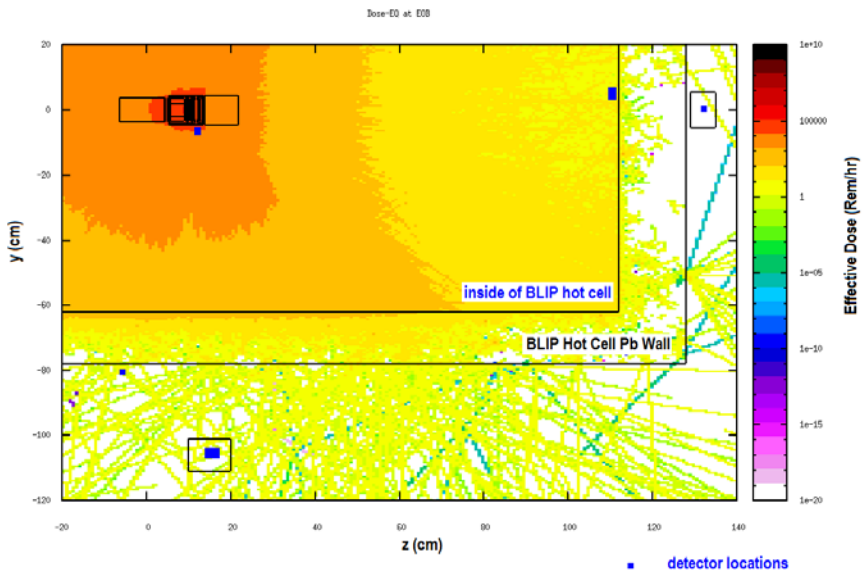

Figure A3.1: Effective dose profile with LHC array retrieved to hot cell above and decaying inside the hot cell at BLIP (no additional shielding by the storage box)

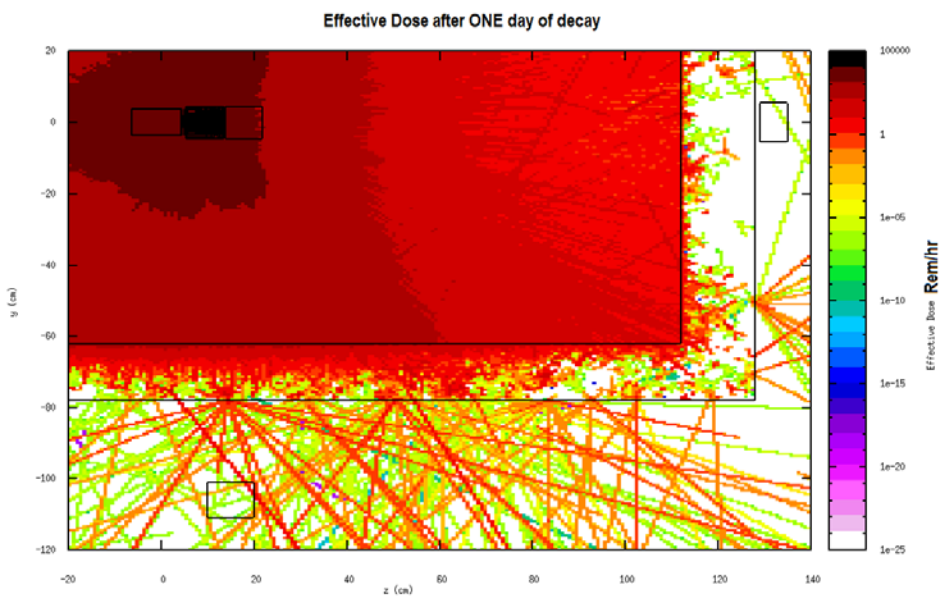

Figure A3.2: Effective dose profile with LHC array retrieved to hot cell above after one day of decay inside the hot cell at BLIP (no additional shielding by the storage box)

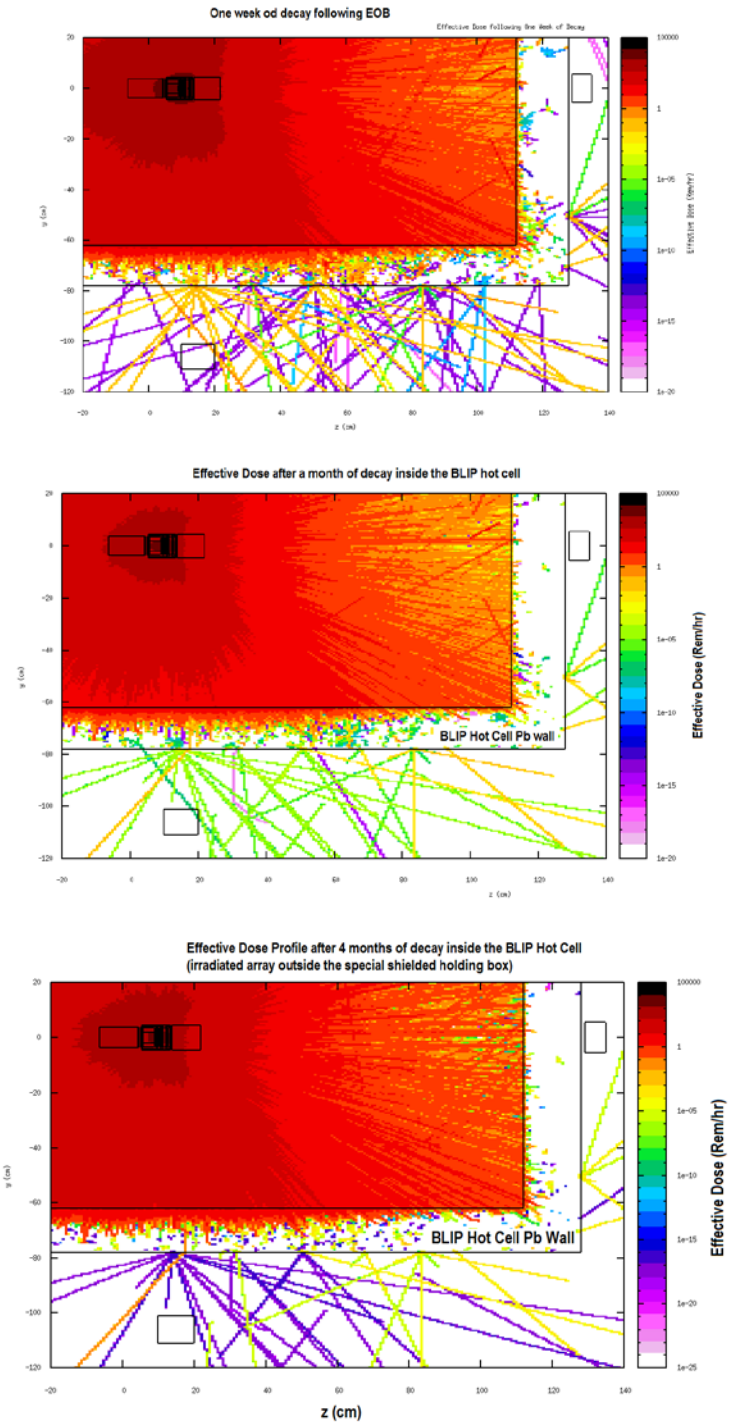

Figure A3.3: Effective dose profile with LHC array retrieved to hot cell above at different decay times inside the hot cell at BLIP (no additional shielding by the storage box)

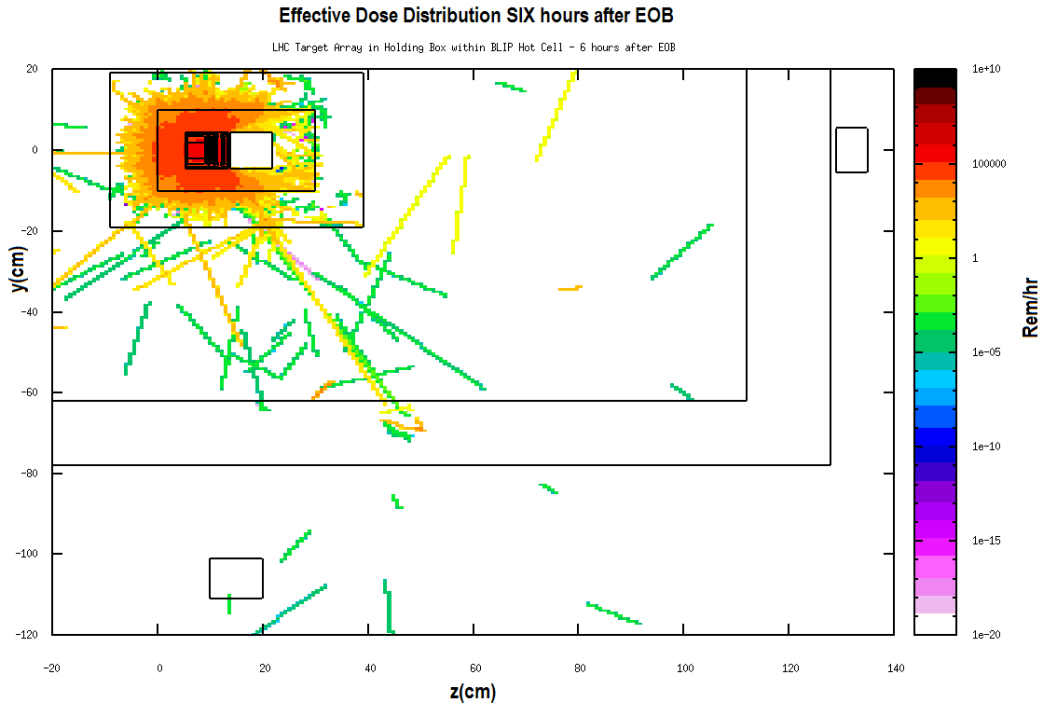

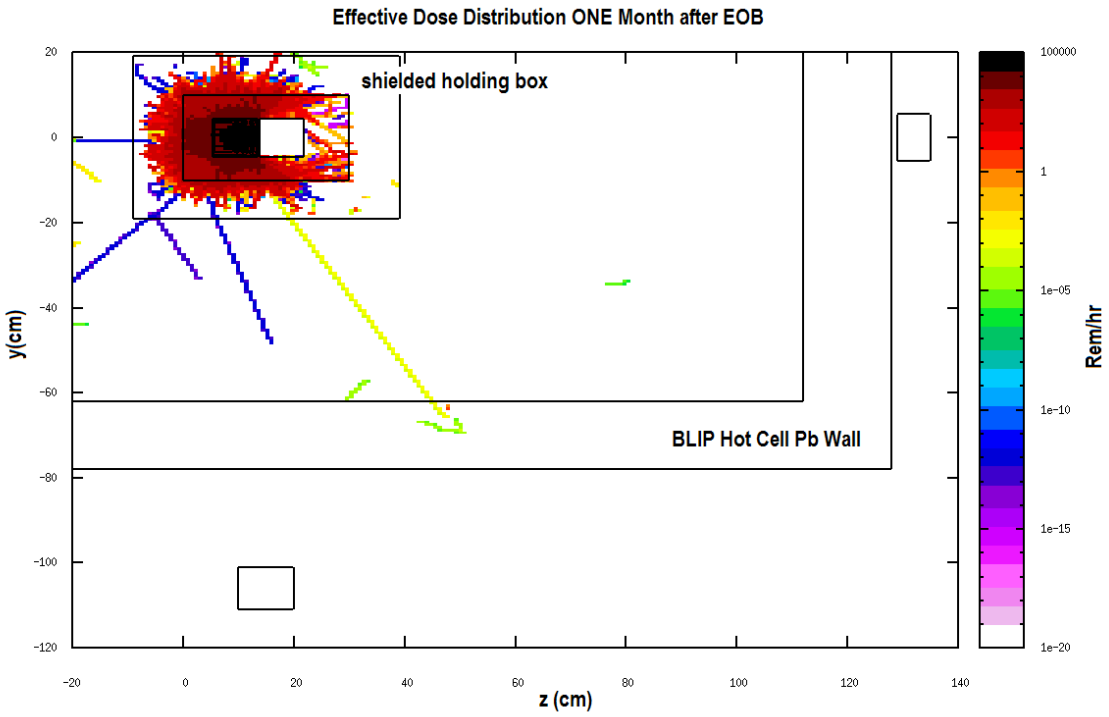

Figure A3.4: Effective dose profile with LHC array decaying inside the 4" wall auxiliary/storage box inside the hot cell at BLIP (no additional shielding by the storage box)

MCNPX Dose Estimation: A detailed model was used to estimate dose from the target array after it has been retrieved to hot cell above a day after EOB. Two equivalent approaches were used (detector and energy deposition) and under two scenarios (with lead and without) between the source and a volume of water. The results (which are conservative for being based on 9-week BLIP irradiation) are as follows:

WITH Pb:	Detector approach dose	= 0.2568 rad/hr	
	Energy deposited approach dose	= 0.104 rad/hr	Hence average ~0.18 rad/hr
NO Pb:	Detector approach dose	= 166.112 rad/hr	
	Energy deposited approach dose	= 139.784 rad/hr	Hence average ~152 rad/hr

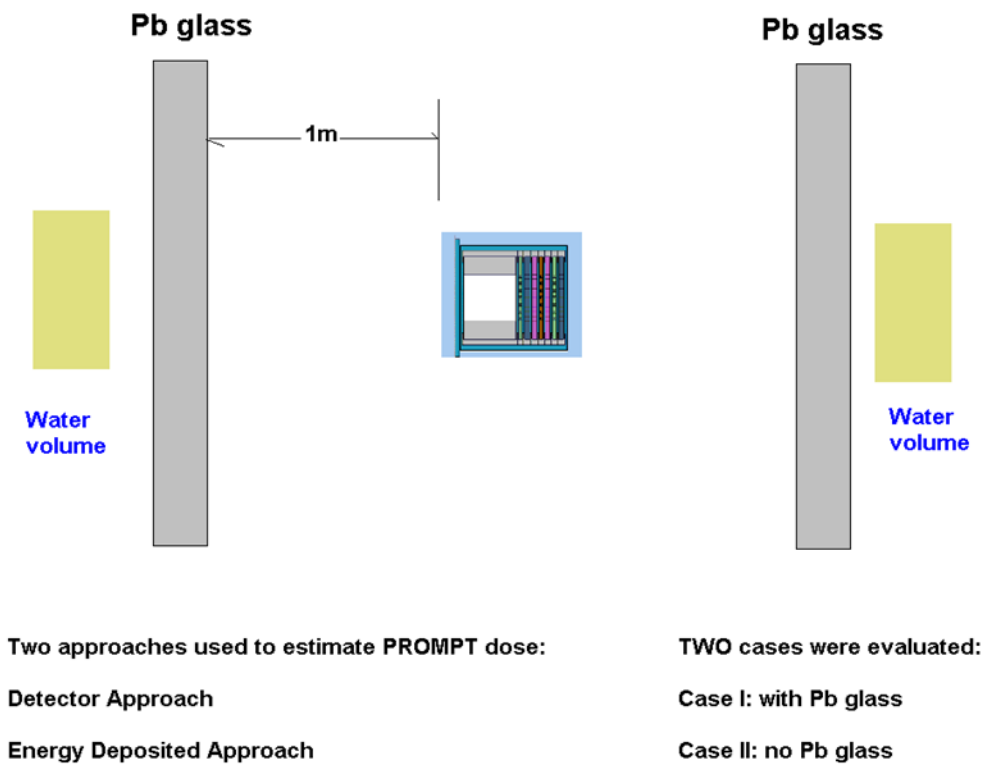

Figure A3.5: Schematic of the MCNPX Dose calculations for the LHC target array at the BLIP hot cell

The following figures depict computed doses at different distances and different times from the LHC target array with and without shielding between the source and the detector. Specifically they show effective doses at various distances from the irradiated array over different times, effective dose outside the walls of the hot cell and outside the transport pig.

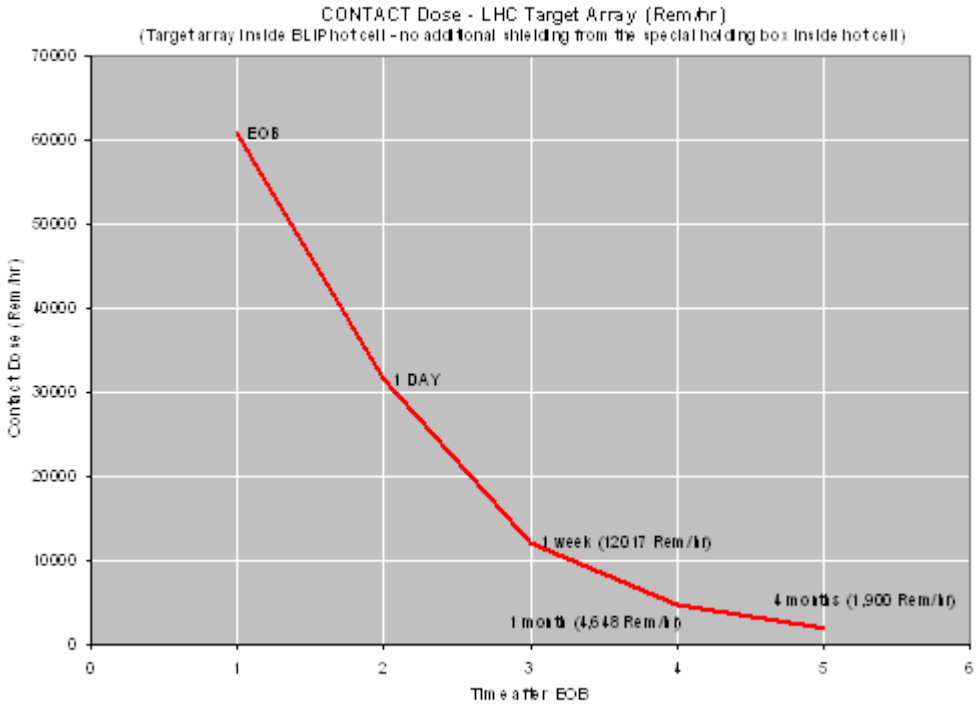

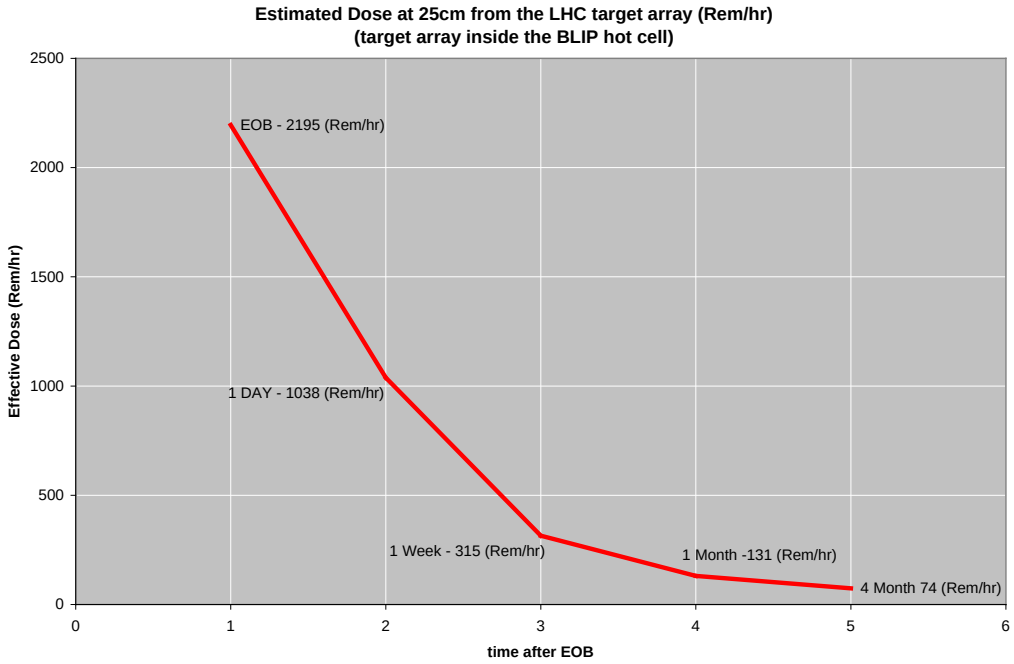

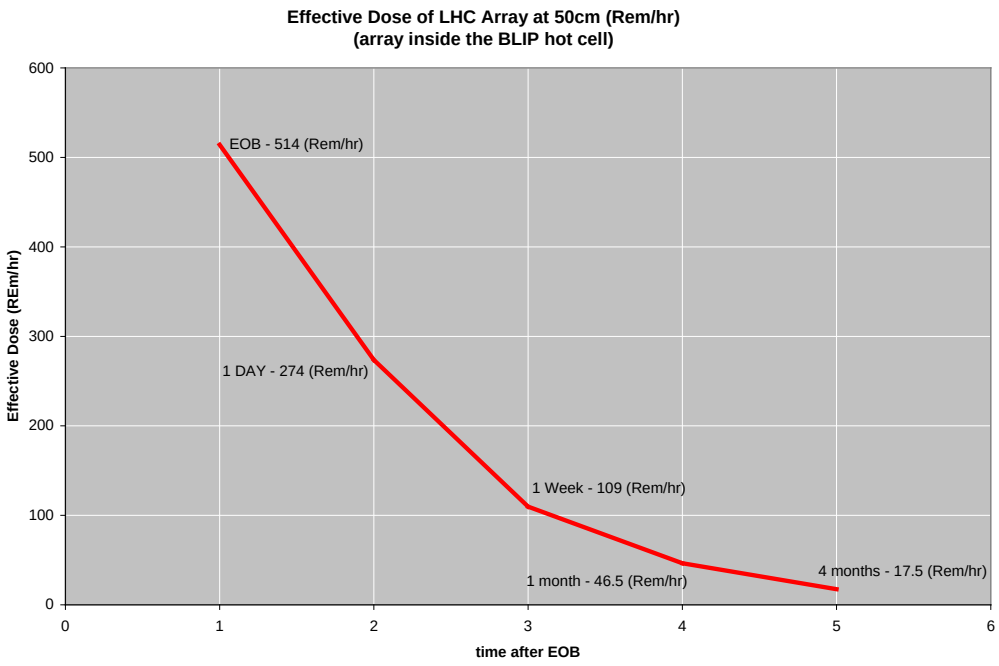
Effective Dose of LHC Array at 50cm (Rem/hr)
(array inside the BLIP hot cell)
Effective Dose (REm/hr)
time after EOB
EOB - 514 (Rem/hr)
1 DAY - 274 (Rem/hr)
1 Week - 109 (Rem/hr)
1 month - 46.5 (Rem/hr)
4 months - 17.5 (Rem/hr)
0
100
200
300
400
500
600
0
1
2
3
4
5
6

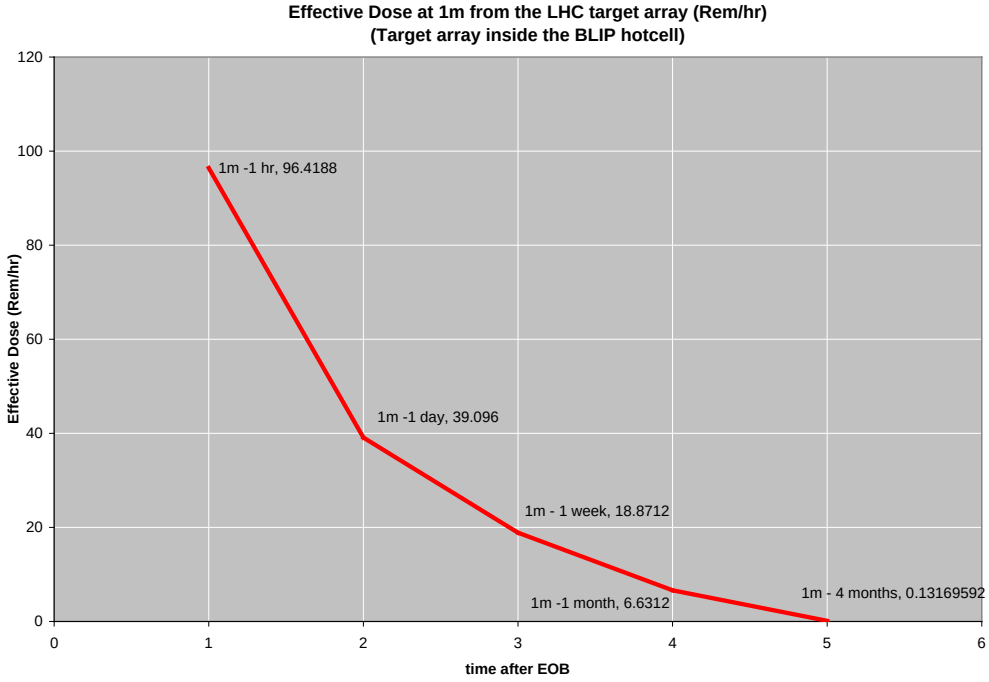
Effective Dose at 1m from the LHC target array (Rem/hr)
(Target array inside the BLIP hotcell)
Effective Dose (Rem/hr)
time after EOB
1m -1 hr, 96.4188
1m -1 day, 39.096
1m - 1 week, 18.8712
1m -1 month, 6.6312
1m - 4 months, 0.13169592
0
20
40
60
80
100
120
0
1
2
3
4
5
6

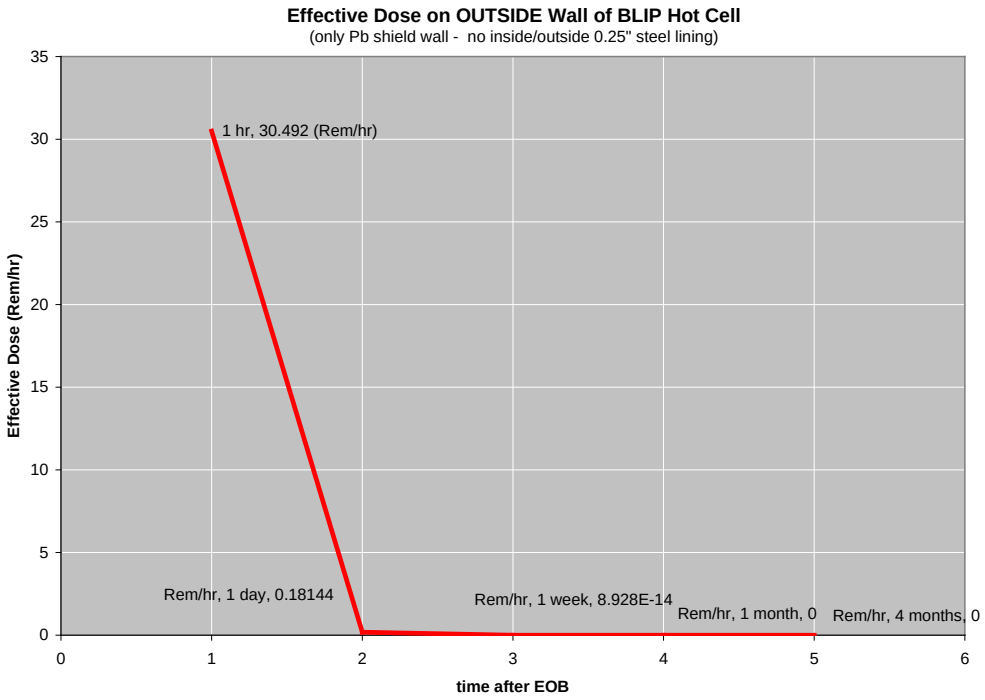
Effective Dose on OUTSIDE Wall of BLIP Hot Cell
(only Pb shield wall - no inside/outside 0.25" steel lining)
Effective Dose (Rem/hr)
time after EOB
1 hr, 30.492 (Rem/hr)
Rem/hr, 1 day, 0.18144
Rem/hr, 1 week, 8.928E-14
Rem/hr, 1 month, 0
Rem/hr, 4 months, 0
0
5
10
15
20
25
30
35
0
1
2
3
4
5
6

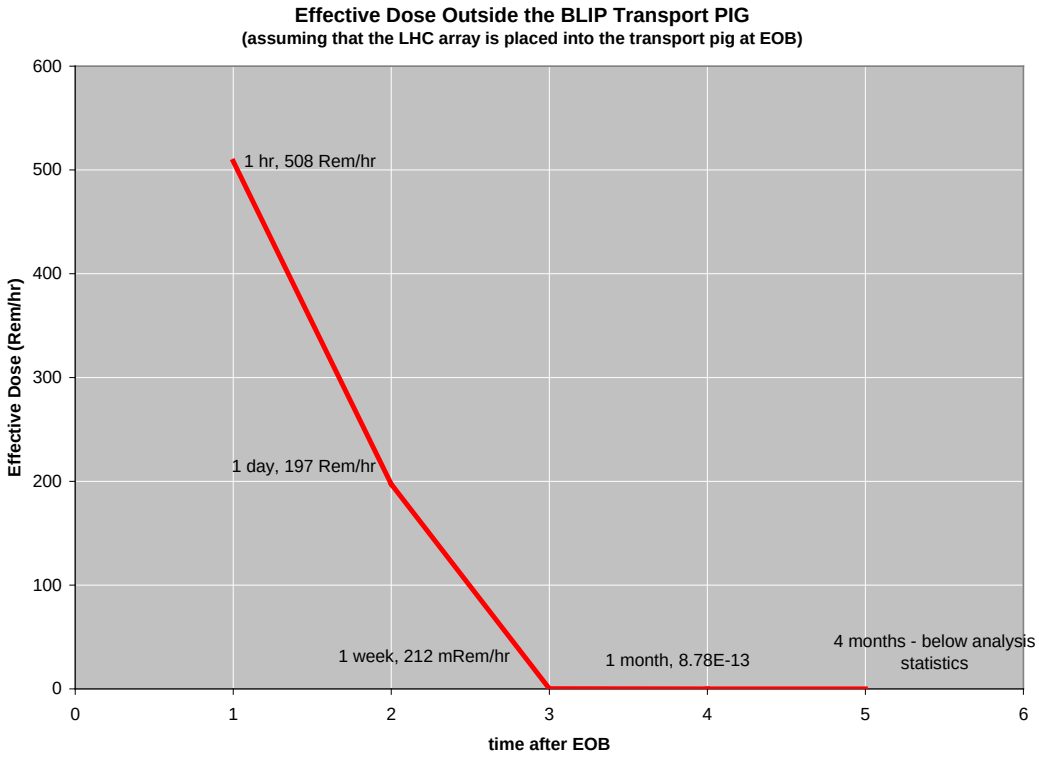
Effective Dose Outside the BLIP Transport PIG
(assuming that the LHC array is placed into the transport pig at EOB)
Effective Dose (Rem/hr)
time after EOB
1 hr, 508 Rem/hr
1 day, 197 Rem/hr
1 week, 212 mRem/hr
1 month, 8.78E-13
4 months - below analysis statistics
0
100
200
300
400
500
600
0
1
2
3
4
5
6

Radionuclides and corresponding activities (and decay) were calculated using the MCNPX and FLUKA codes.

The following 3 tables Table A3.1-2 contain sorted results of the MCNPX analysis according the radionuclide activities present at (a) EOB, (b) one day and (c) four months.

Table A3.1 MCNPX calculated spectrum of radionuclides and their activity at EOB and after one day of decay produced in the entire LHC target array upon bombardment for 9 weeks as at 100 uA.

		EOB (Ci)	1 day (Ci)	Isotope		EOB (Ci)	1 day (Ci)	Isotope		EOB (Ci)	1 day (Ci)
Y	**89***	2.27E+01	1.77E+01	**Tc**	**93**	2.65E+00	7.02E-03	**Nb**	**98***	3.39E-01	1.20E-09
Zr	89	2.17E+01	1.77E+01	Y	88	2.59E+00	2.62E+00	Nb	87*	2.91E-01	7.7E-115
Nb	90	1.89E+01	6.81E+00	Y	85*	2.53E+00	8.25E-02	Br	77	2.87E-01	2.17E-01
Y	87	1.50E+01	1.26E+01	Tc	96*	2.46E+00	9.40E-09	Tc	101	2.81E-01	1.91E-29
Y	86	1.17E+01	6.40E+00	Y	87*	2.26E+00	6.23E-01	Mo	101	2.81E-01	6.00E-31
Zr	87	1.02E+01	6.96E-04	Nb	95*	2.26E+00	1.87E+00	Tc	92	2.74E-07	8.3E-100
Mo	91	8.99E+00	9.35E-28	Sr	82	2.12E+00	2.06E+00	Nb	87	2.68E-01	5.0E-168
Zr	88	8.25E+00	8.19E+00	Nb	81	1.74E+00	4.63E-56	Sr	87*	2.54E-01	6.81E-04
Nb	90*	7.89E+00	0.00E+00	Rb	81	1.73E+00	4.74E-02	Y	88*	2.39E-01	0.00E+00
Nb	92*	6.97E+00	6.51E+00	Rb	83	1.70E+00	1.71E+00	Nb	99*	2.38E-01	4.5E-168
Zr	86	6.75E+00	2.46E+00	Nb	97*	1.55E+00	1.60E-02	Mo	93*	2.33E-01	2.13E-02
Nb	91*	5.53E+00	5.46E+00	Y	84	1.50E+00	2.23E-18	Rb	81*	2.24E-01	1.35E-15
Zr	89*	5.48E+00	1.0E-103	Zr	85	1.38E+00	9.78E-56	Rb	84	2.20E-01	2.16E-01
Mo	99	5.06E+00	3.94E+00	Tc	93*	1.18E+00	1.28E-10	Y	83*	2.03E-01	1.6E-153
Tc	99*	4.86E+00	3.81E+00	Tc	95*	9.93E-01	9.82E-01	Rb	79	1.89E-01	1.96E-20
Mo	90	4.60E+00	2.45E-01	Zr	87*	9.28E-01	0.00E+00	Mo	88	1.80E-01	1.18E-55
Nb	94*	4.39E+00	2.49E-69	Rb	80	8.97E-01	1.40E-05	Zr	95	1.71E-01	1.70E-01
Zr	90*	4.38E+00	0.00E+00	Tc	94	8.90E-01	2.95E-02	Kr	77	1.70E-01	2.50E-07
Sr	85	4.15E+00	4.12E+00	Sr	85*	8.57E-01	3.36E-07	Tc	100	1.70E-01	0.00E+00
Y	85	3.96E+00	8.13E-03	Sr	83*	7.83E-01	0.00E+00	Nb	98	1.68E-01	0.00E+00
Nb	95	3.95E+00	3.92E+00	Y	84*	7.60E-01	1.11E-11	Sr	80	1.66E-01	1.39E-05
Sr	83	3.69E+00	2.21E+00	Mo	89	7.37E-01	4.8E-214	Y83	83	1.66E-01	1.05E-62
Nb	89	3.64E+00	1.02E-03	Kr	79	7.10E-01	4.43E-01	Kr	79*	1.66E-01	0.00E+00
Nb	97	3.35E+00	1.81E-02	Nb	99	5.95E-01	0.00E+00	Zr	85*	1.57E-01	0.00E+00
Tc	96	3.19E+00	2.73E+00	Tc	97*	5.17E-01	5.13E-01	Br	76	1.49E-01	6.64E-02
Nb	89*	3.19E+00	8.62E-07	Y	86*	5.03E-01	4.68E-10	Mo	89*	1.47E-01	0.00E+00
fc	94*	3.17E+00	1.46E-08	Sr	81	4.90E-01	1.79E-20	Zr	84	1.34E-01	2.23E-18
Nb	96	3.02E+00	1.48E+00	Nb	88	4.23E-01	8.20E-31	Y	91*	1.22E-01	4.73E-04
Tc	95	3.00E+00	1.33E+00	Y	90	3.77E-01	2.94E-01	Y	91	1.20E-01	1.19E-01
Mo	91*	2.71E+00	0.00E+00	Rb	82*	3.67E-01	2.80E-02	Nb	86	1.17E-01	0.00E+00
Rb	82	2.67E+00	2.06E+00								

Table A3.2: MCNPX calculated spectrum of radionuclides and their activity produced in the entire LHC target array upon bombardment for 9 weeks as at 100 uA after four (4) months of decay. Activity sorted in decreasing order.

Isotope		4-month Decay (Ci)	Isotope		4-month Decay (Ci)
Y	**88**	3.83E+00	**Se**	**79**	1.75E-13
Zr	88	3.02E+00	Rb	87	7.49E-14
Nb	91*	1.43E+00	Zn	65	7.21E-14
Sr	85	1.14E+00	Ru	97	5.77E-16
Rb	83	6.64E-01	Br	77	1.37E-16
Nb	95	4.50E-01	As	71	8.50E-17
Tc	95*	2.51E-01	Ga	67	9.24E-22
Tc	97*	2.05E-01	Nj	63	7.21E-22
Rb	82	7.95E-02	Fe	59	1.65E-22
Sr	82	7.95E-02	Ge	69	8.67E-26
7r	95	4.62E-02	Kr	79	8.01E-26
Nb	93*	2.88E-02	Cu	67	5.12E-26
Y	91	2.87E-02	Co	60	4.39E-26
H	3	1.96E-02	Sr	83	3.94E-27
Rb	84	1.72E-02	Br	82	3.44E-28
Tc	95	1.02E-02	Fe	60	1.79E-29
Se	75	8.58E-03	Co	60*	1.79E-29
Nb	91	5.19E-03	Cu	66	3.49E-30
As	73	3.10E-03	Ni	66	3.48E-30
Sr	89	2.80E-03	Ga	72	1.58E-30
Nb	92*	1.80E-03	Zn	72	1.10E-30
Mo	93	7.51E-04	As	77	5.11E-31
Rb	86	6.30E-04	Se	82	2.93E-31
Nb	95*	5.44E-04	Co	58	2.65E-31
Y	90	9.48E-05	Ni	59	2.99E-33
Sr	90	9.47E-05	Se	77*	1.64E-33
As	74	5.14E-05	Nb	96	1.10E-37
Nb	94	3.78E-05	Co	57	2.44E-38
Kr	85	4.75E-06	Mn	54	3.84E-40
Tc	99	3.31E-06	As	76	3.23E-41
Ge	Tt	1.75E-06	Fe	55	2.54E-41
Kr	81	1.07E-06	Co	56	1.95E-45
As	72	3.32E-07	Cr	51	1.50E-49

Se	72	2.89E-07
Y	89*	2.60E-07
Tc	97	7.23E-47
Zr	93	9.34E-08
Tc	98	3.16E-08
Tc	96	9.90E-09
Nb	92	8.73E-09
Y	87	2.04E-10
Zr	89	1.56E-10
Ga	68	2.43E-11
Ge	68	2.43E-11
Mo	99	2.80E-13
Tc	99*	2.71E-13

Y	86	6.61E-52
Zr	86	7.05E-53
Mn	52	1.17E-53
Nb	97	9.08E-54
Zr	97	8.43E-54
Nb	97*	8.00E-54
Mn	53	2.03E-54
Br	76	5.75E-55
V	49	1.47E-56
V	48	1.81E-58
Nb	90	2.90E-59
Kr	76	3.40E-61

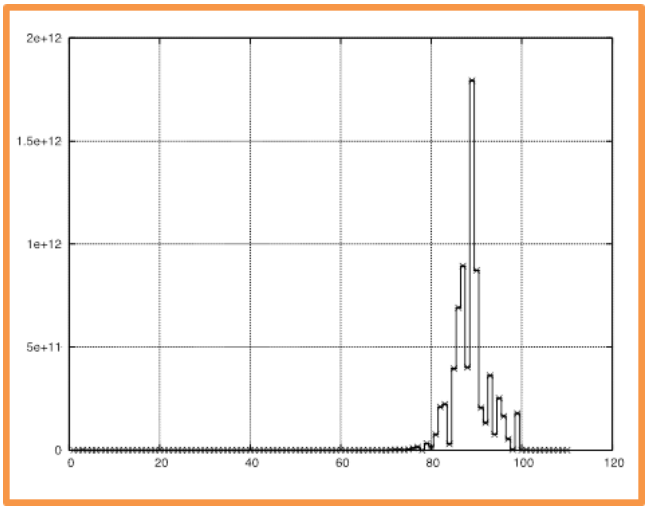

After 1 hour (Total ~7.1e+12 Bq/cm3 +/-0.3%)

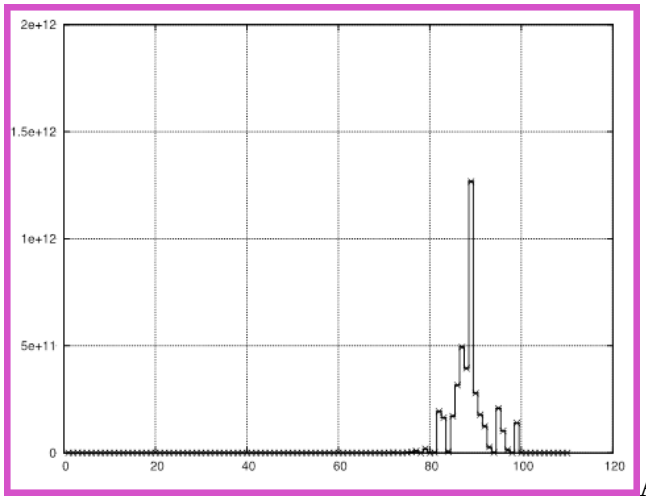

After 1 day (Total ~4.1+12 Bq/cm3 +/-0.3%)

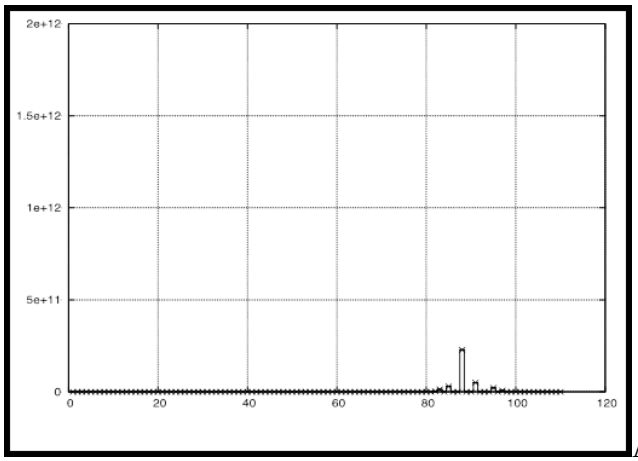

After 4 months (Tot. ~3.6e+11 Bq/cm3 +/-0.6%)

Figure A3.1: Decay profile of the activity in one of the Mo target capsules (in Bq/cm^3)

Appendix 4

LHC Target Array Blueprints

Included in Appendix 4 are images of the approved design drawings of the target assembly and its components. The complete package of drawings that cover every item in the array is the exact representation of the array that has been irradiated for 4 ½ weeks at BLIP and is awaiting approval for the additional 3-week irradiation to reach the required fluence threshold. The complete package is attached as Appendix 4 Supplement. The portfolio of associated drawings includes drawings:

D25-M-3460
D25-M-3462
D25-M-3463
D25-M-3465
D25-M-3466
D25-M-3467
D25-M-3468
D25-M-3469
D25-M-3470
D25-M-3471
D25-M-3472
D25-M-3473
D25-M-3475

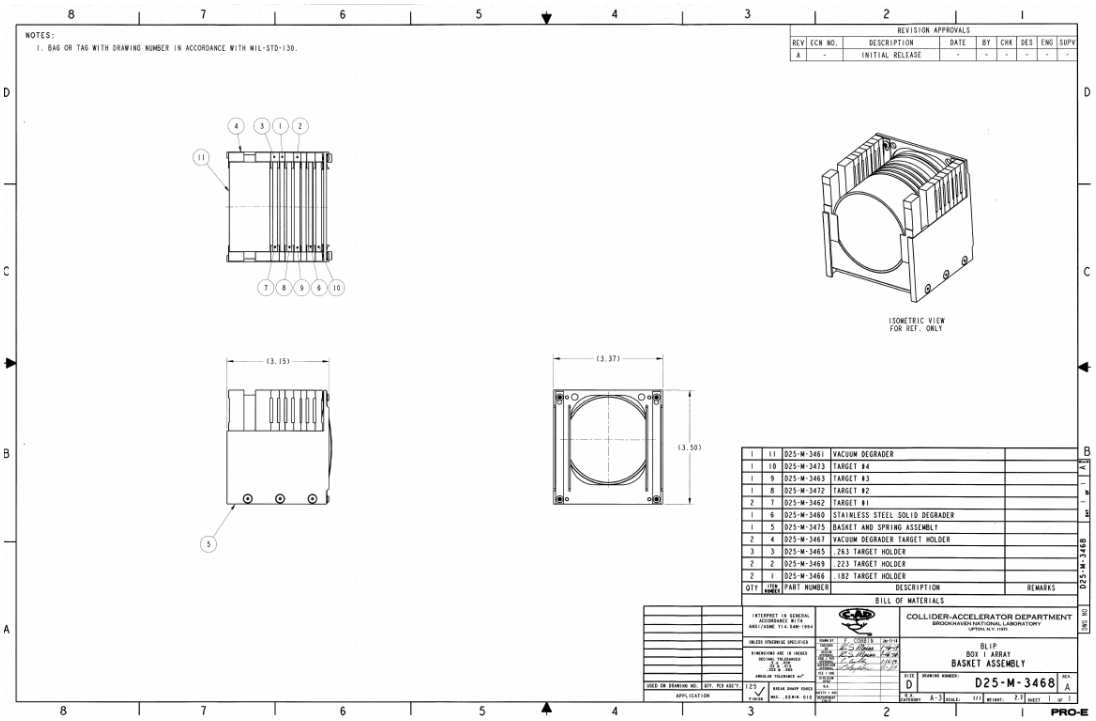

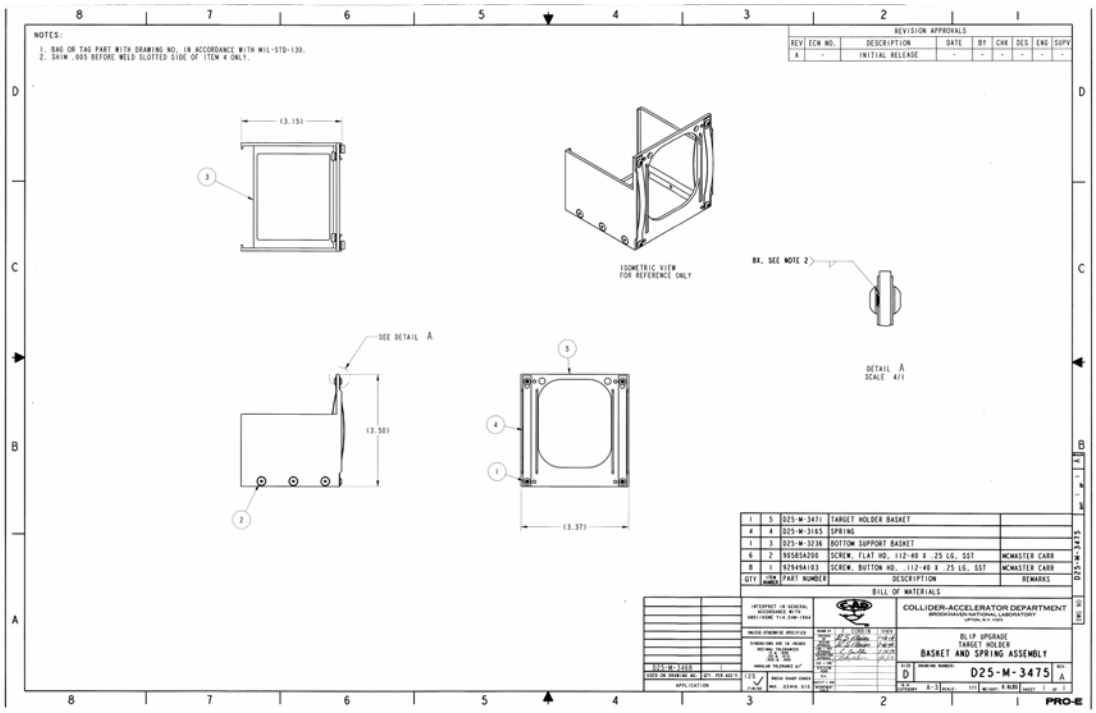

Figure A4.1: Blueprint of integrated LHC Target array into the BLIP Box1

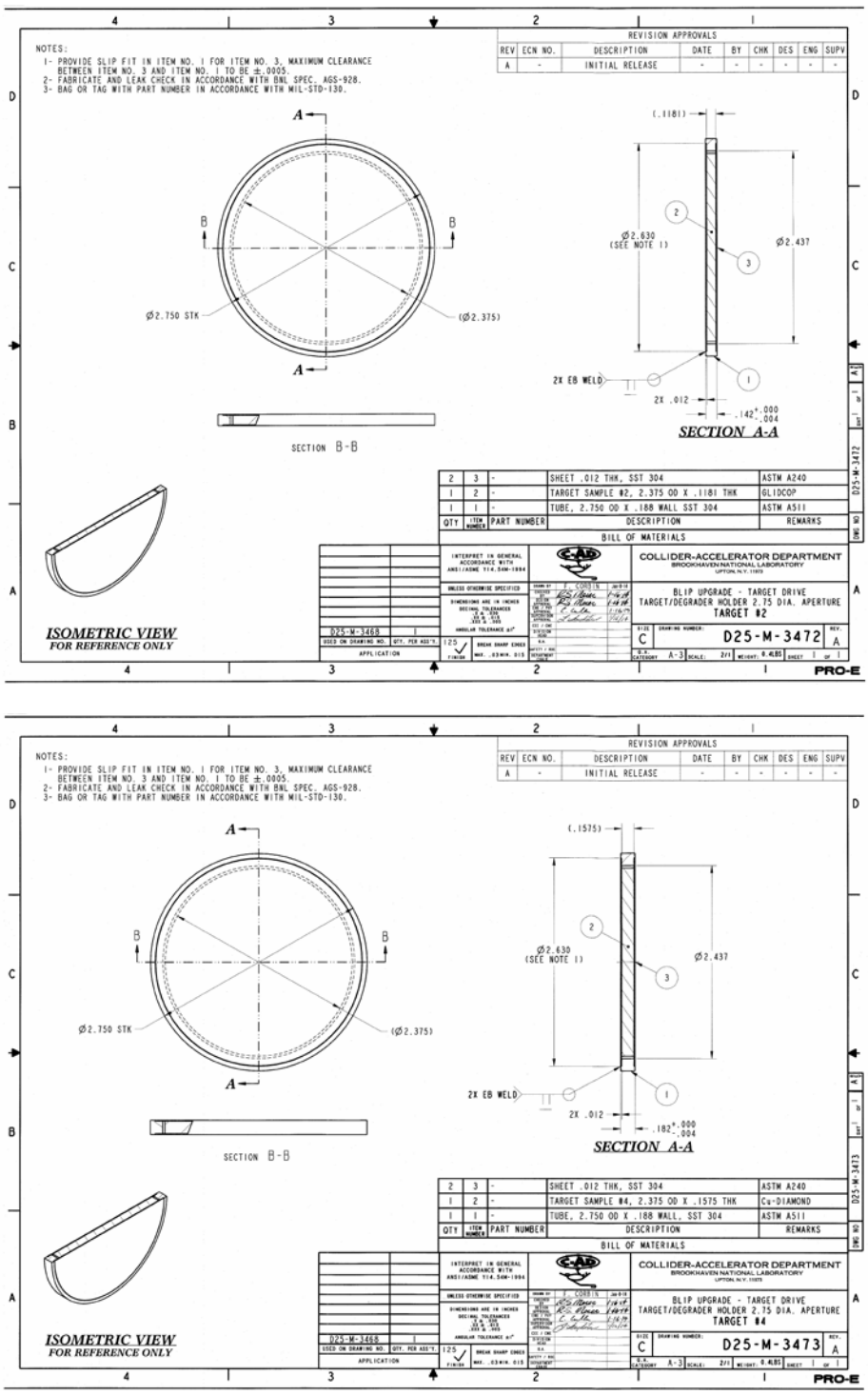

Figure A4.2: Blueprint of 3mm and 4mm target capsules in BLIP Box1

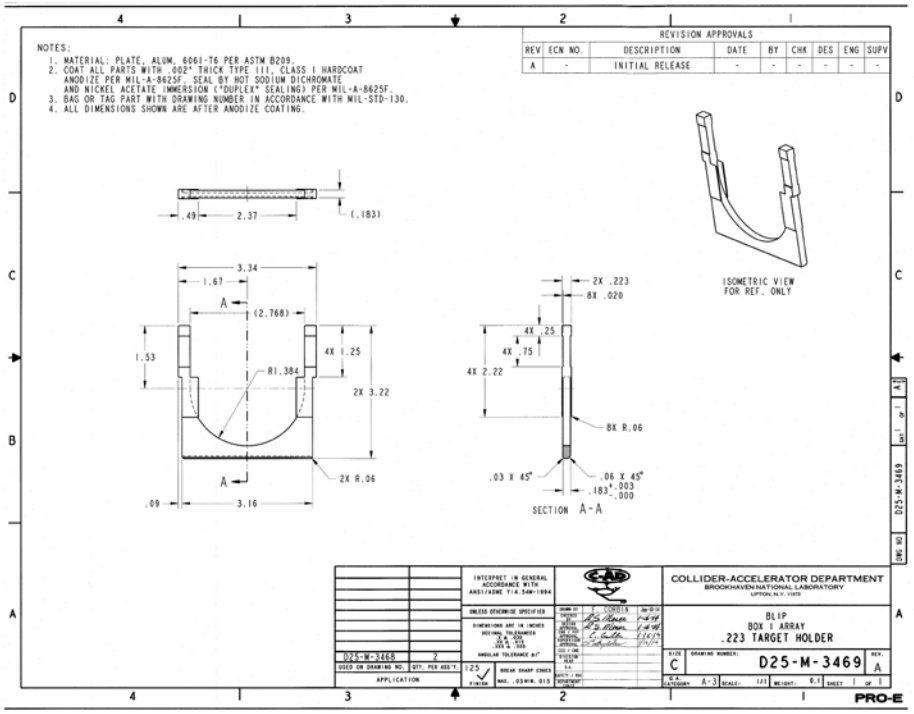

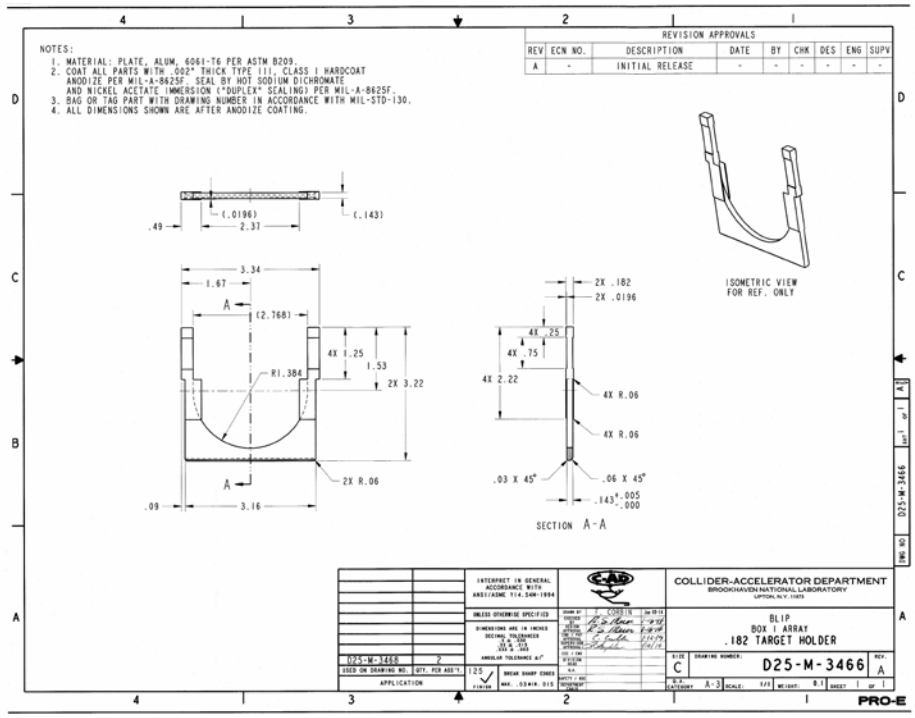

Figure A4.3: Blueprint of target capsule holders

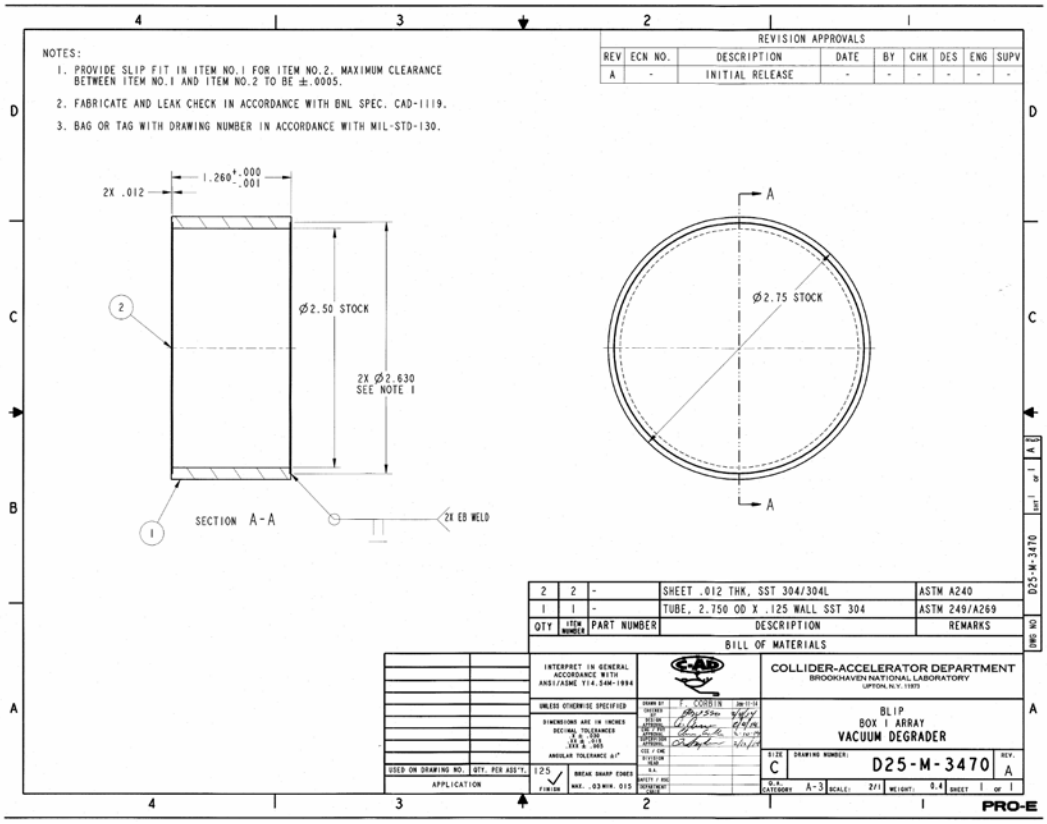

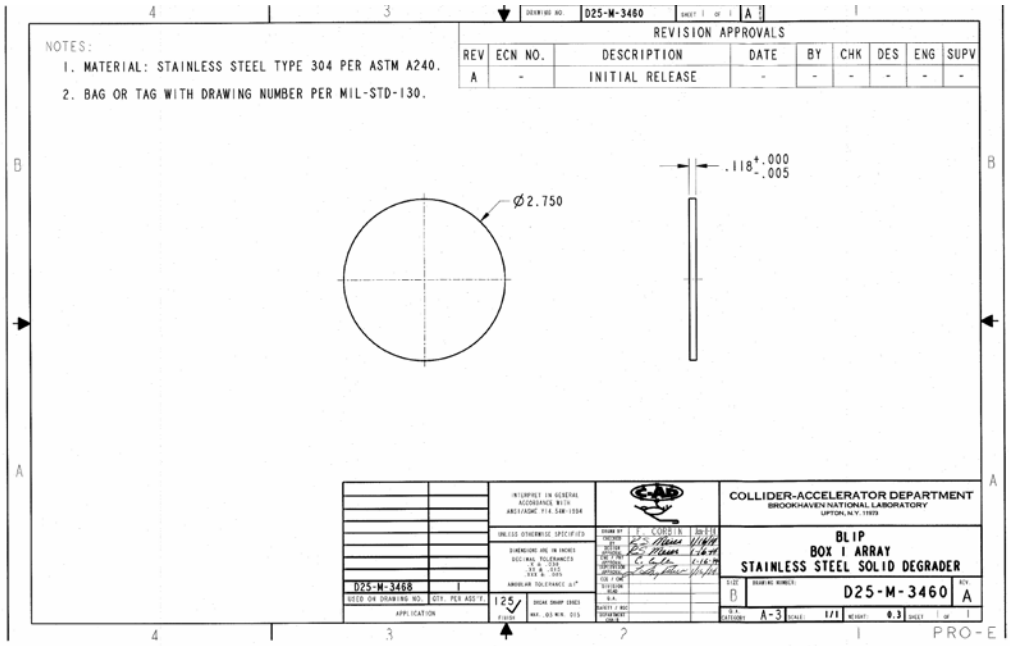

Figure A4.4: Blueprint of vacuum and stainless steel disk degraders of Box1