RSC Review for Near-Term SRF Testings

- 1.3 GHz Gun with Cathode (SVTF)
- Coated Bellow Test (SVTF)
- 400 MHz Cavity (LVTF)
- 56 MHz Cavity (RHIC Tunnel)

November 2015 – December 2015

1.3GHz gun for field emission cathode test

Erdong Wang

Response person

- PI : Ilan Ben-Zvi
- Liaison physics: Qiong Wu
- LOTO: Tom Seda
- Experiments participants: Erdong Wang, Huamu Xie(maybe)

Beamline, Top plate, dimensions

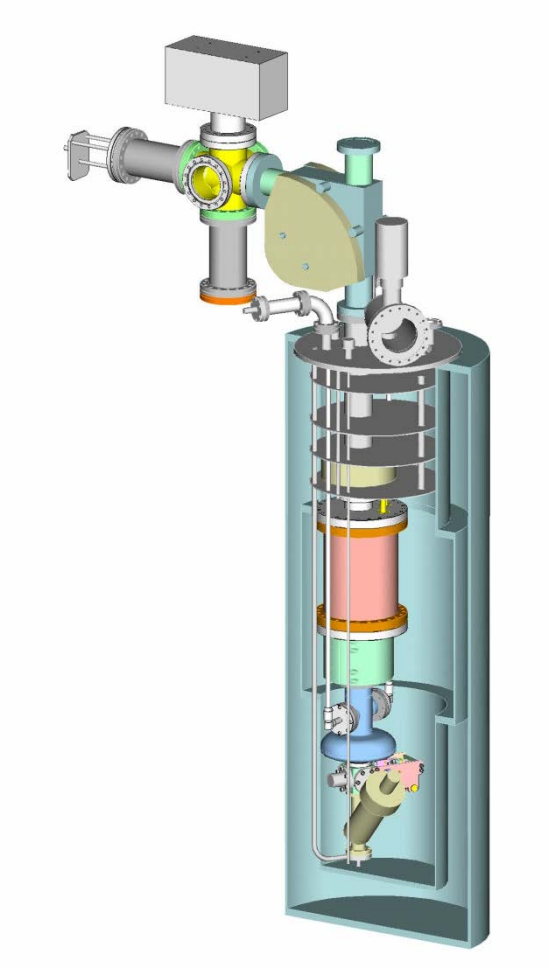

1. The beam line includes solenoid, 90 deg diople, YAG and Faraday cup.
2. The gun was placed into the Dewar several times in last 5 years.
3. Dewar diameter :24 inch.
4. Dewar plus stand :6 feet
5. Dewar to top :25 inch
6. Faraday cup to dipole: 33 inch
7. Dipole to top :6 inch

gun and beam parameters

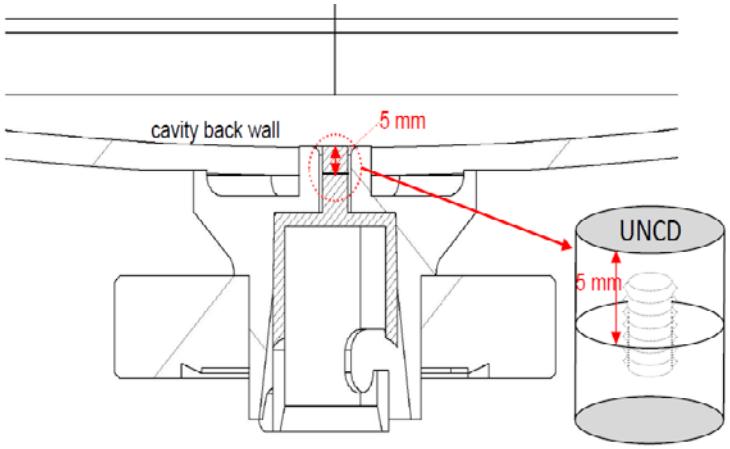

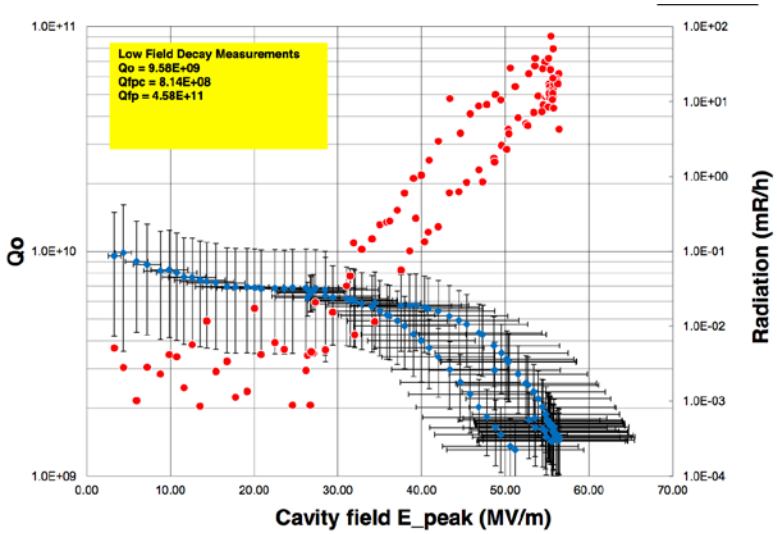

Field emission I	160nA
Cathode field	30MV/m
Gun gap voltage	14MV/m
Beam energy	800keV
Beam power	0.13W
Peak current	0.012mA
Storage energy	0.67 J

RF amplifier and RF test

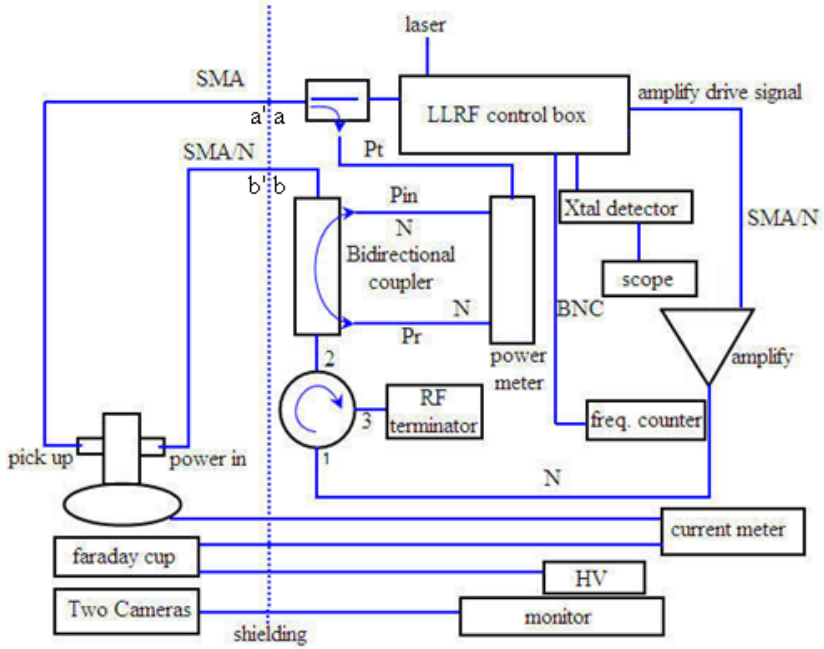

- The Amplifier, LLRF and RF circuit were tested before.
- Maximum power output is 90W.
- Gun needed: less than 2W

AASC Bellow Cryogenic Test

Binping Xiao
Jean Cliff Brutus

Oct 14 2015

Personnel

- PI: Binping Xiao
- Liaison physicist: Qiong Wu
- LOTO: Tom Seda
- Possible participants: Silvia Verdu Andres, Chen Xu

Cold test field pattern

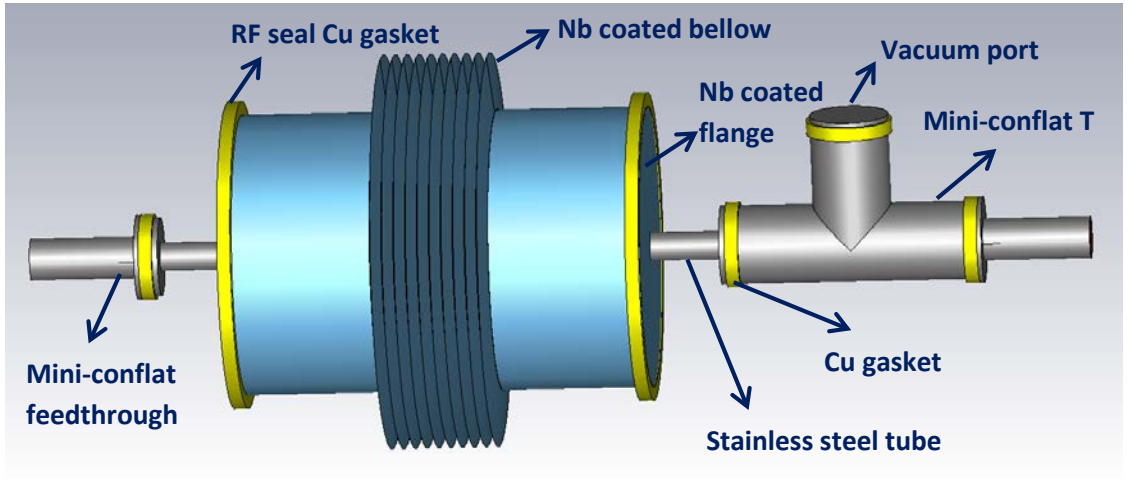

S.S Qext: 1.22e9
Cu Qext: 3.74e8
Nb Qext: 1.71e8
Q from above: 1.07e8
FPC Qext set at 1.13e8
PU Qext set at 1.72e9

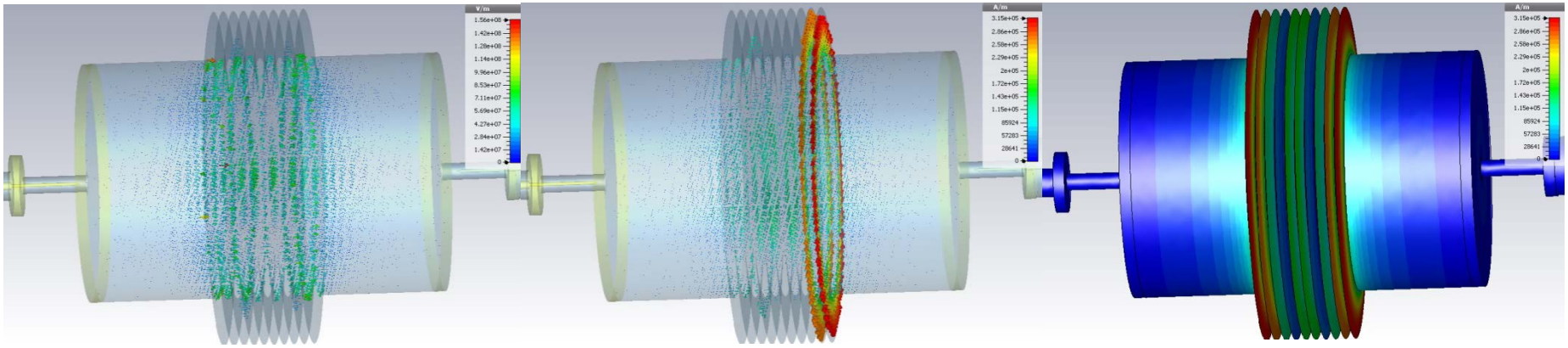

Top Plate, Dewar & Crab Cavity

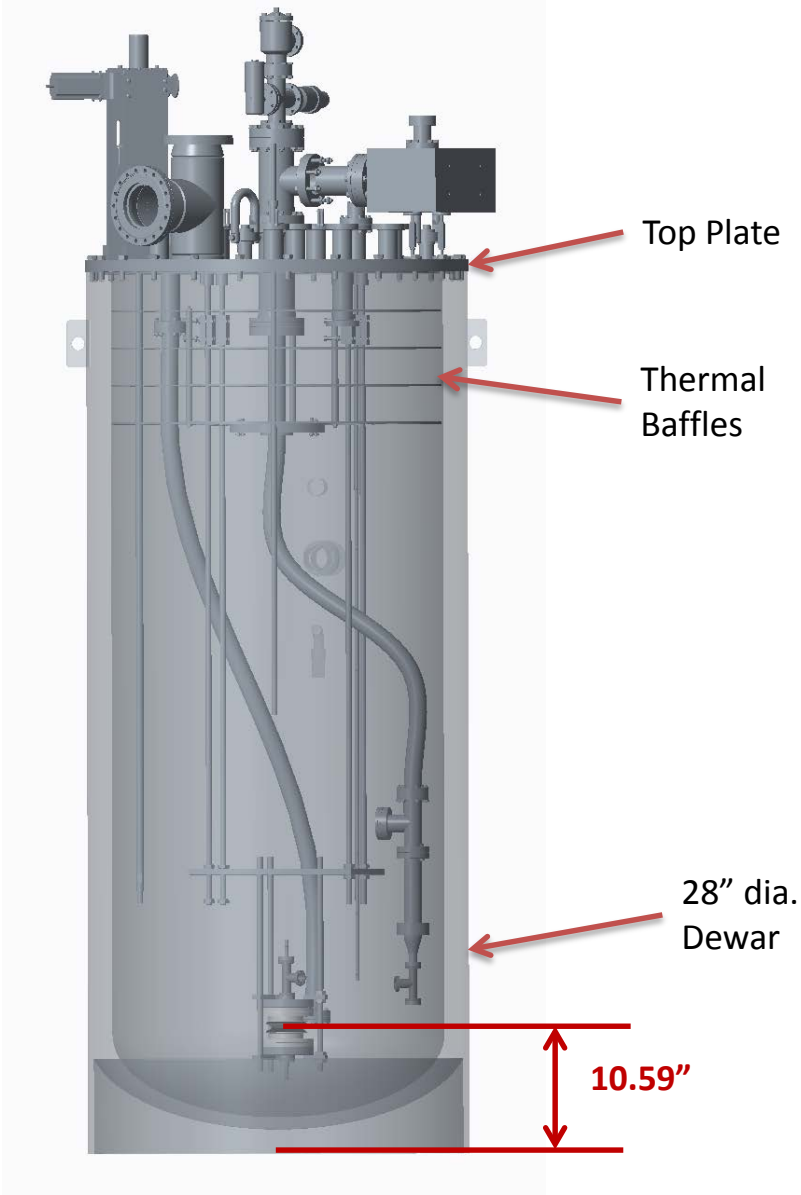

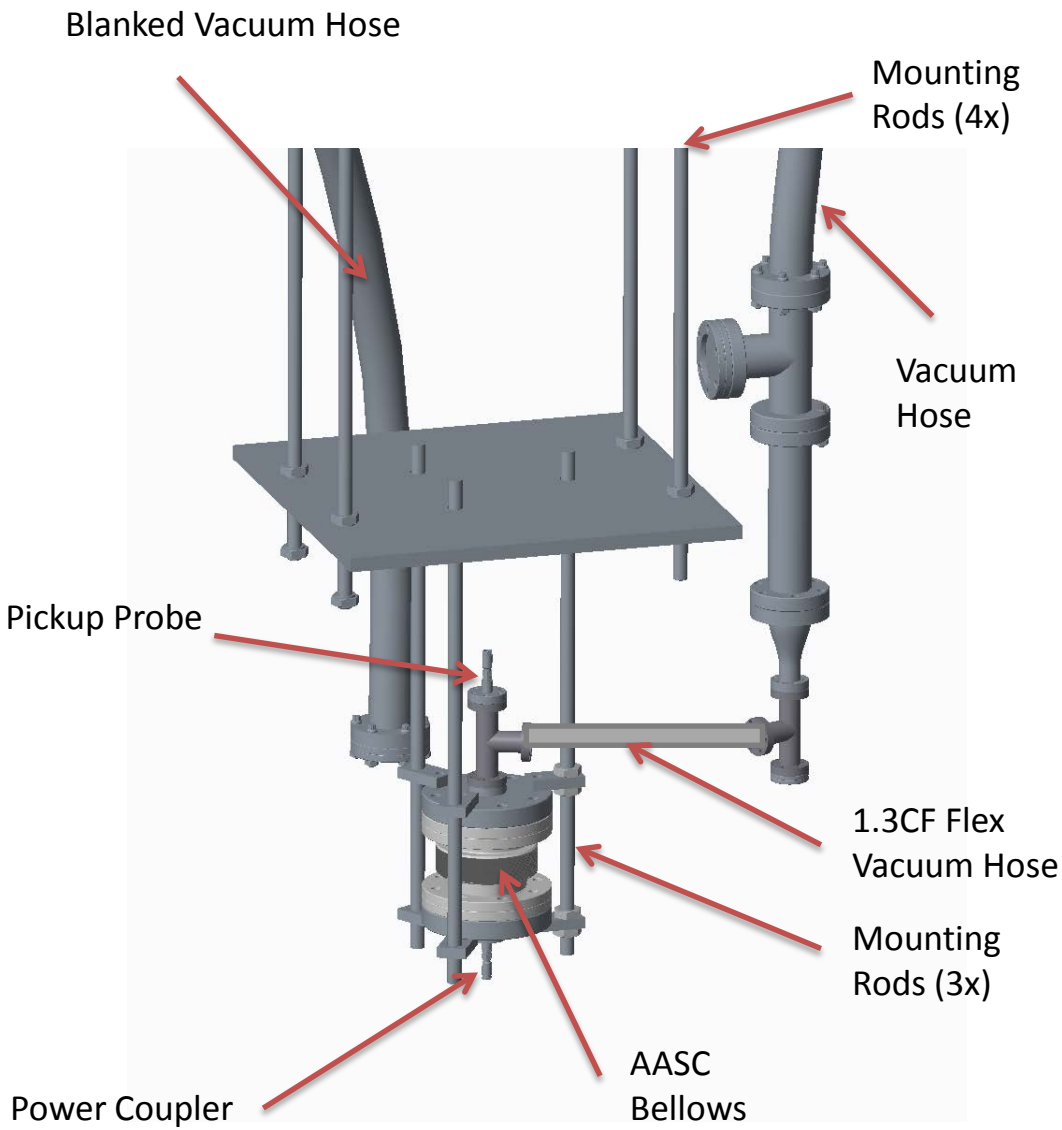

Accelerating Voltage

E field pattern @ 7.3GHz

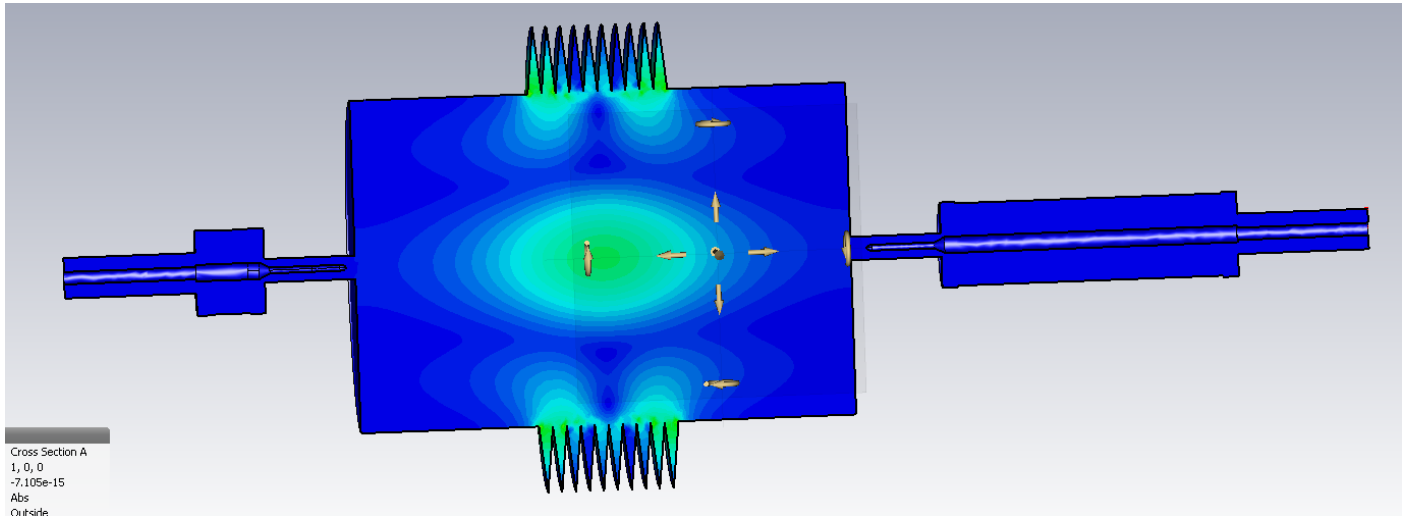

With 10 Watts rated power from Hughes TWTA 1177H02,
and assuming critical coupled:

- Stored energy inside the bellow will be 0.0233Joule.
- Maximum voltage gain will be 37.5kV.
- Bellow vertically placed, max voltage gain pointing to the roof.
- No beam.

Our current plan is to test it only once. If we want to use it on double quarter wave cavity, which we do not have a schedule yet, we will need to test it 2 or 3 more times.
We are planning to conduct multiple tests over one week.
The start date will be two weeks after the 1.3GHz gun test (Erdong's test).

400 MHz Cavity Test

Chen Xu

Oct 20 2015

Personnel

- PI: Chen Xu
- Liaison physicist: Qiong Wu
- LOTO: Tom Seda
- Possible participants: Silvia Verdu Andres, Binping Xiao, Wencan Xu

Accelerating Voltage

The power supplier is 200W CW input, if current External Q of fundamental coupler is $1.5*10^9$. Thus the max energy gain is 6.25Mv energy gain on 37.5cm. Hence the max gradient is 16.0MV/m.

eRHIC specs is 20MV/m with Q0 = $5*10^{10}$.

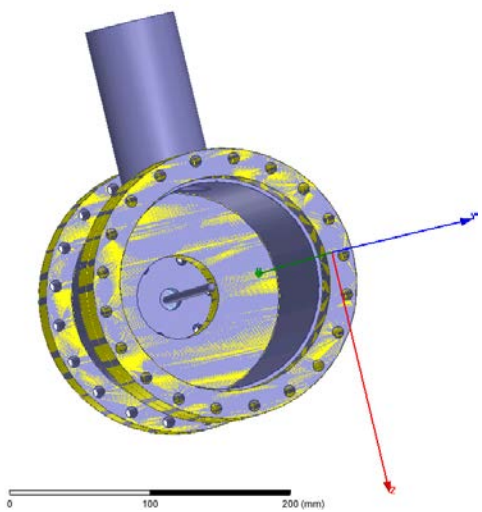

Ceilling

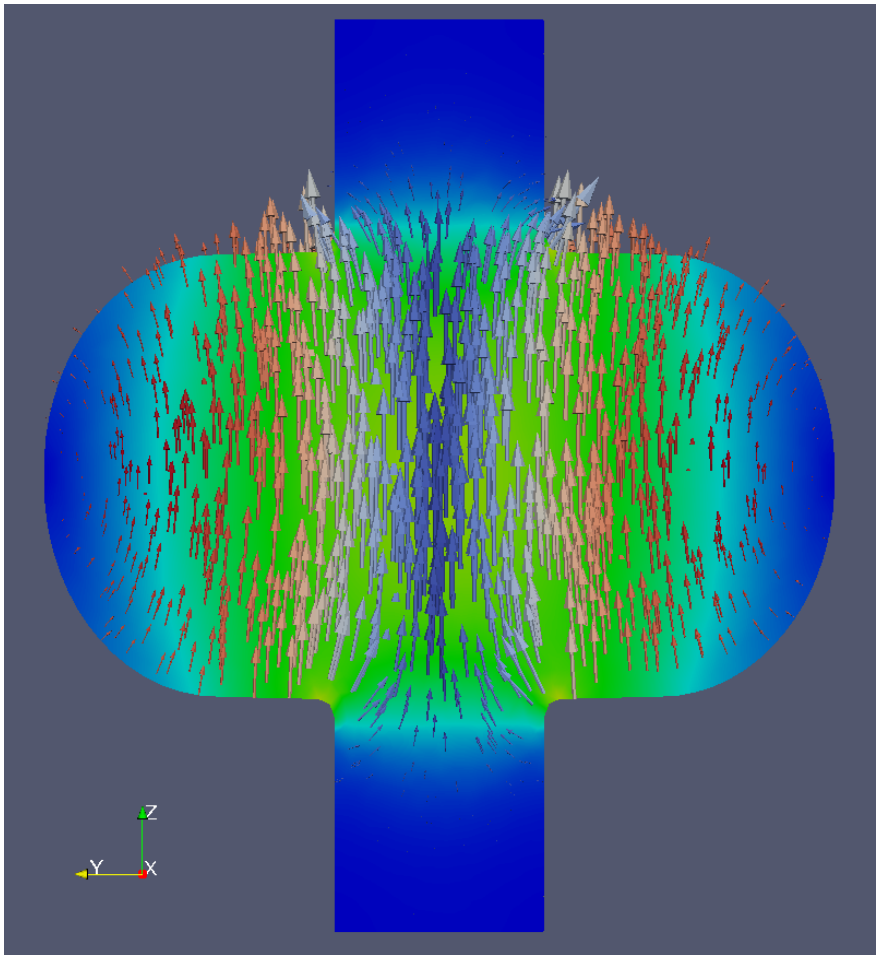

Ground

Power Coupler & Pickup Probe

- Both couplers have fixed Positions
- Stainless steel Bellows is used for release thermal contraction, not for FPC adjustment.

FPC

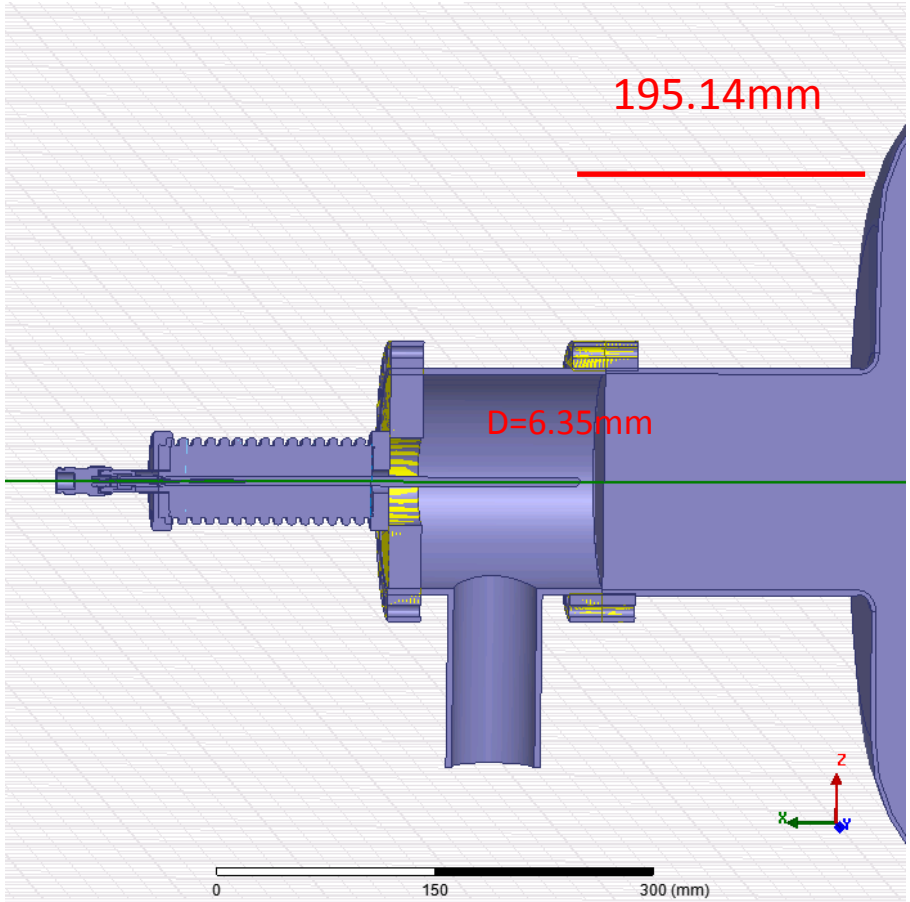

Pickup

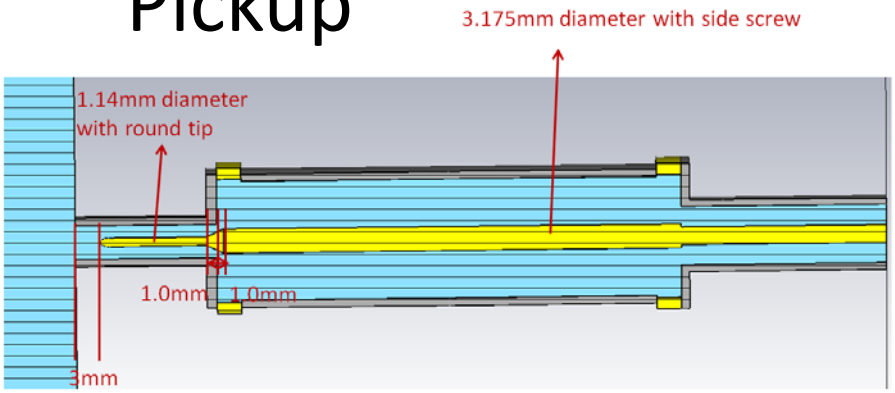

Measured Qe are

1.4e9 for FPC coupler.
1.5e11 for Pickup coupler.

Holding and OST structures

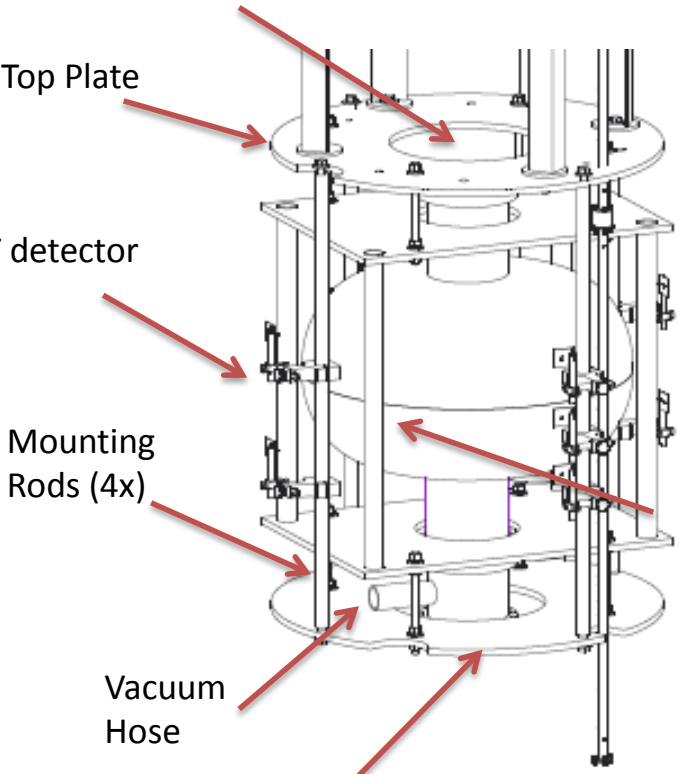

OST detectors are not movable and wont generate any radiation.

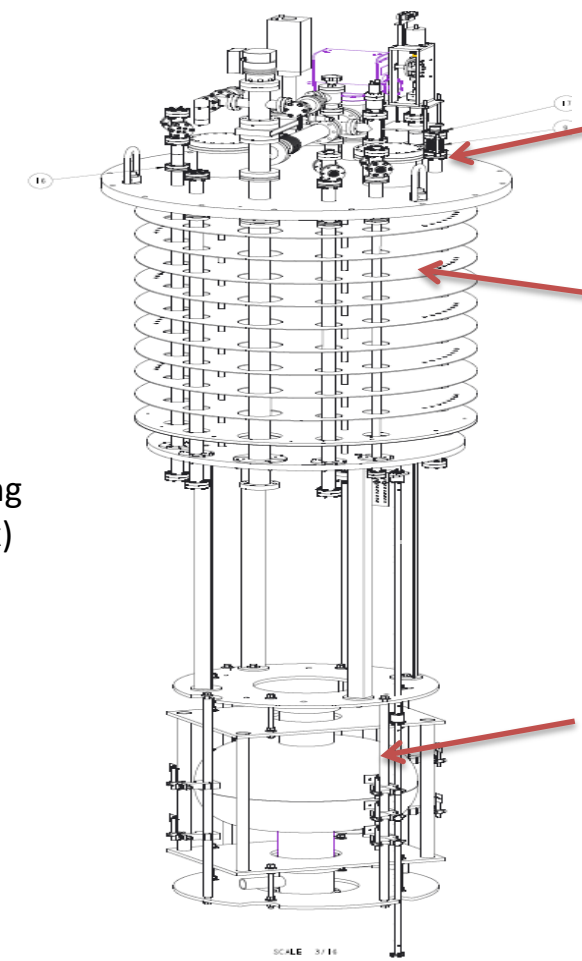

Two plates are added
4 new rods are added
In order to mount 8 OST monitors on them.
The centerline of this cavity will be exactly 50” off of the ground level.

56MHz SRF Cavity Test in RHIC Tunnel

Qiong Wu

Oct 20 2015

RF TEST

- One HOM coupler will be installed to the cavity, same as the RF setup in the RHIC Run14.
- The change in the HOM coupler, compared to the one installed in Run14, is mainly on the vacuum seal and eliminating normal conducting material. The RF function of the coupler is unchanged.
- The HOM coupler is used to extract RF power with frequency higher than the 56.3 MHz mode. No input power is involved. In other words, it is a passive device.
- The new coupler was fully compared in RF function to the one installed in Run14, and the difference in power extraction at 56 MHz is less than 25%.
- The measurement done in Run14 showed that the HOM coupler will output ~2W of RF power from a coaxial cable.
- The goal for this test is to measure the maximum voltage the cavity can reach without quenching the cavity or the HOM coupler.

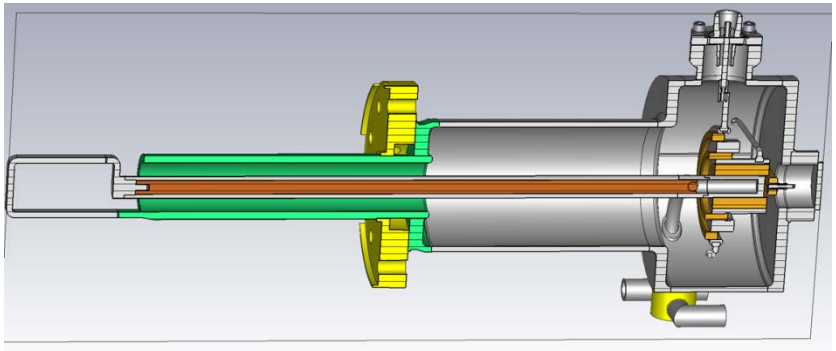

HOM Coupler, FPC and PickUp feedthrough

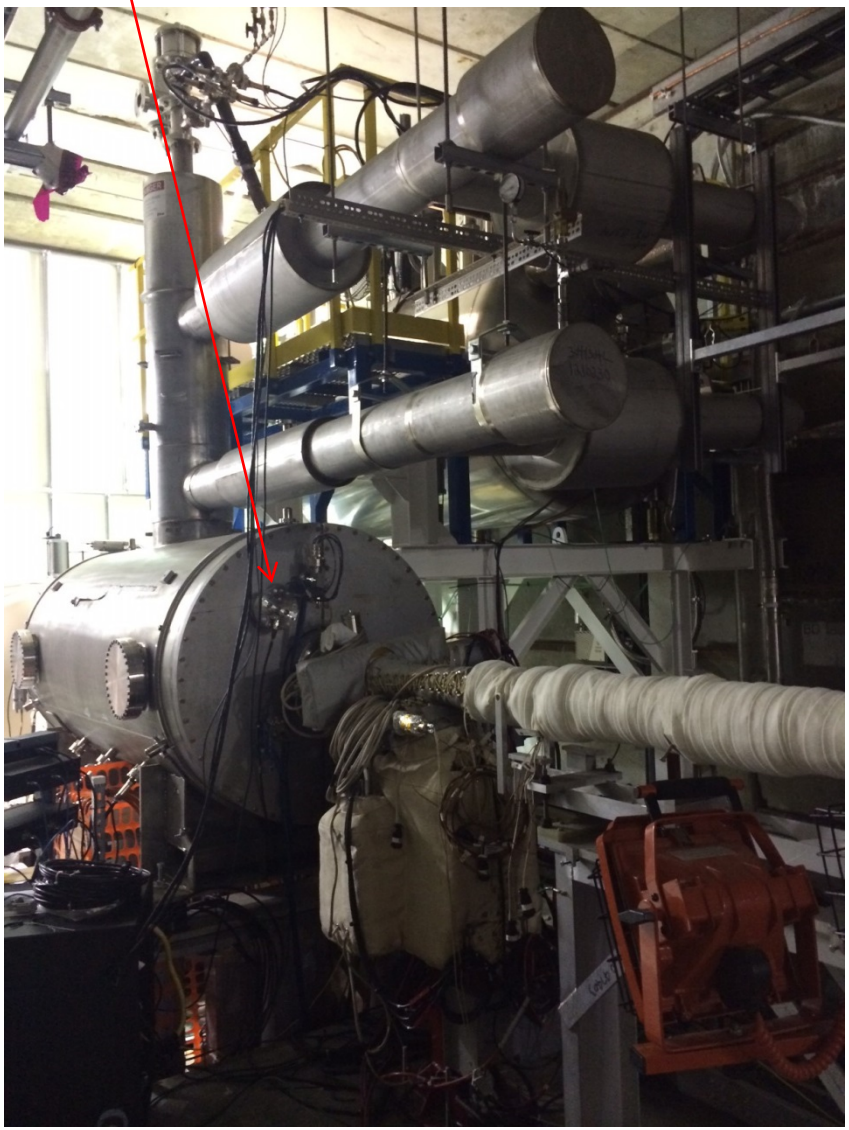

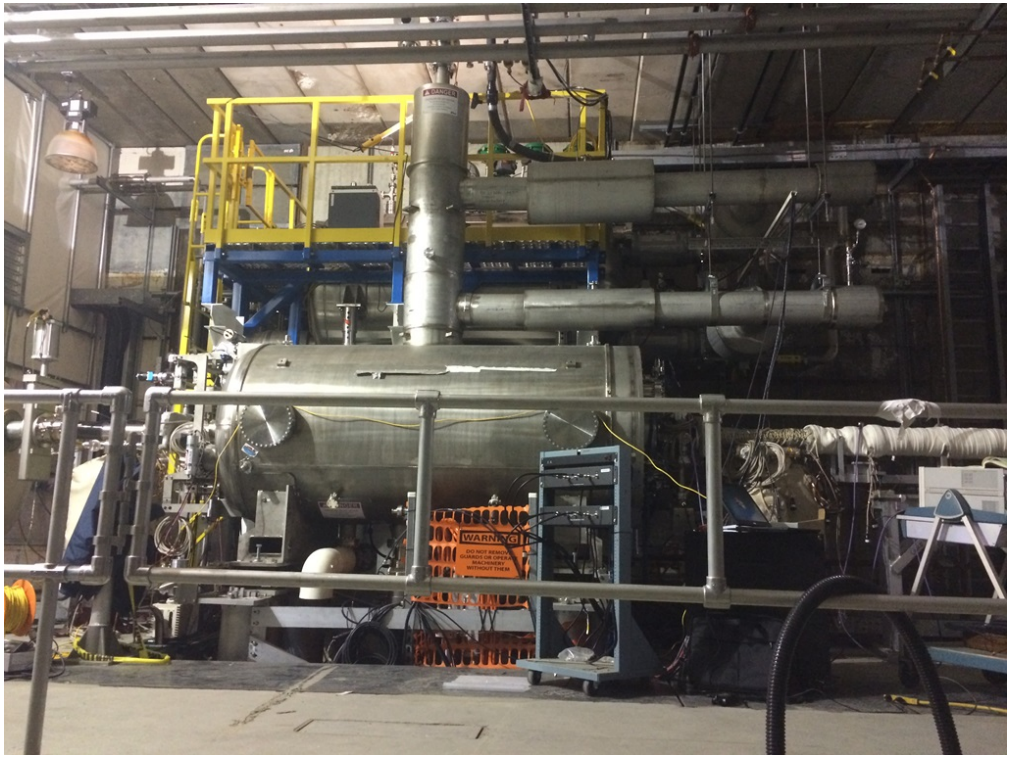

Some safety related facts:

- The Cavity has been under high power testing in June, 2015. No change to the RF power input setup.
- The cavity is under the same safety protocol as all other RHIC cavities.
- The 3.5kW amplifier is linked to the PASS at IP4. The operation of the amplifier may begin only after IP4 has been swept and go into RFNA status.
- The amplifier is currently under LOTO.
- There is an MPS for the 56 MHz with inputs from cryogenic, vacuum, water lines, and RF amplifier. The MPS will shut off the amplifier if any of the input signals went beyond the threshold.
- The MPS is under testing from Oct 19th-30th.
- There are two BLMs mounted on the cavity. There is also a Chipmunk placed underneath the cavity, which has been calibrated and verified by HP.
- The ODH system in the area is certified till Jan 2016. The system will be certified after the cavity testing but before RHIC run. The ODH monitor in the 1004E trailer will be turned on as well.