Low-Power Testing at ERL

Ilan Ben-Zvi

RSC review, September 5, 2012

R&D ERL in bldg 912

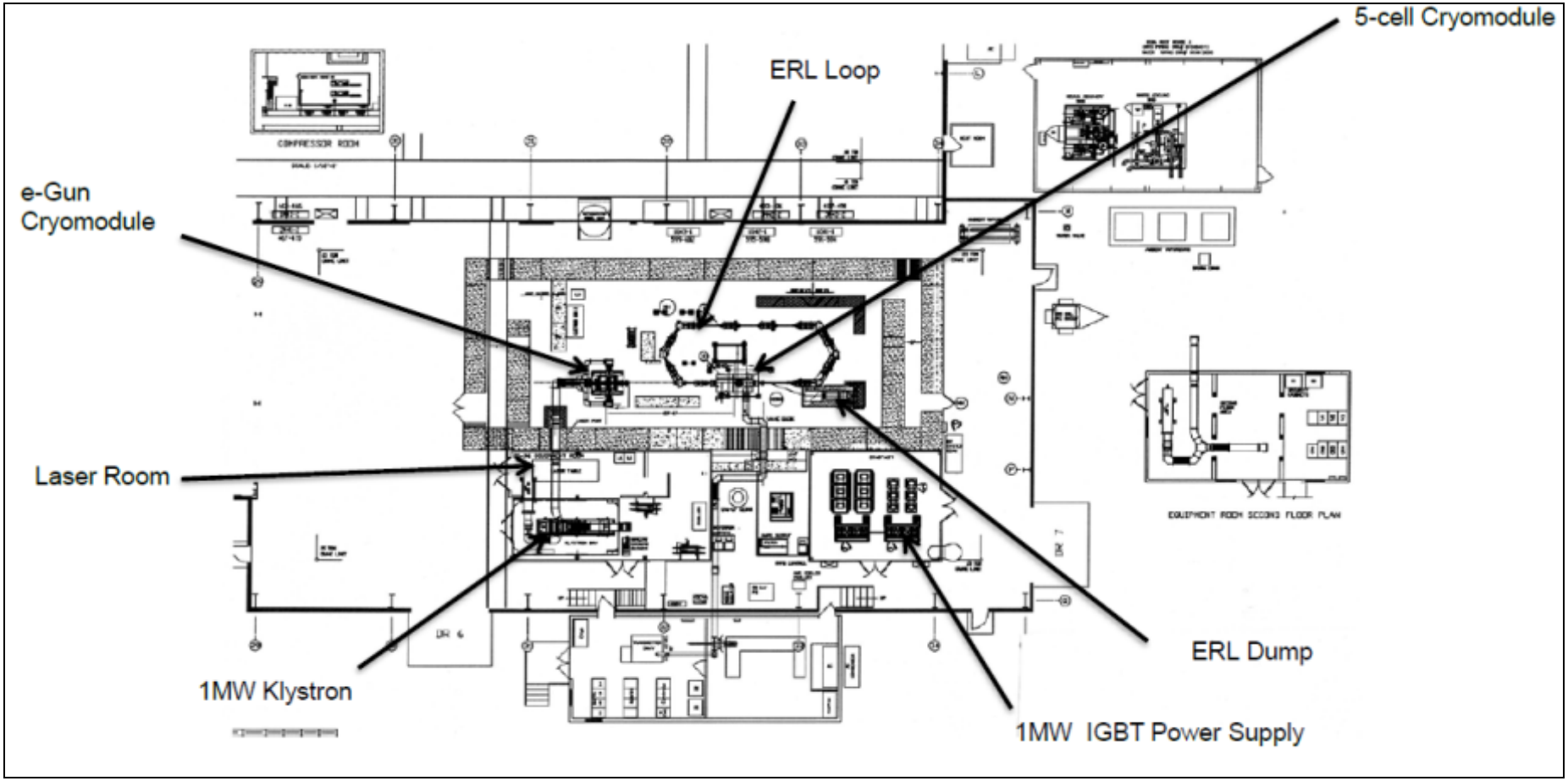

The Prototype ERL has a shielded enclosure, radiation protection and ODH interlocks, beam dump, electron gun, 5-cell RF cavity, focusing and bending magnets, laser, power for RF systems, and a Control Room.

Closer view

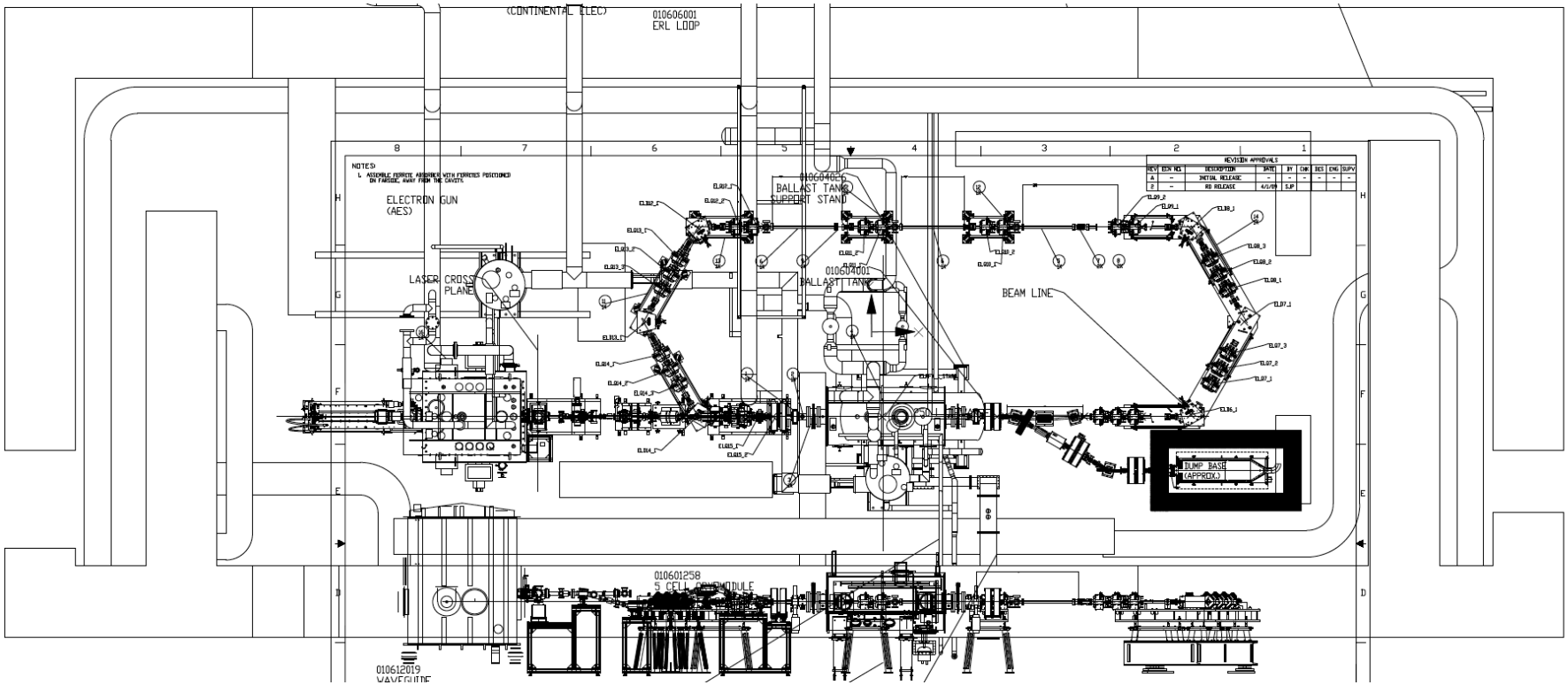
(CONTINENTAL ELEC)
010606001
ERL LOOP
ELECTRON GUN
(AES)
LASER CROSS
PLANE
010604001
BALLAST TANK
BEAM LINE
DUMP BASE
(APPROX.)
010601258
010612019

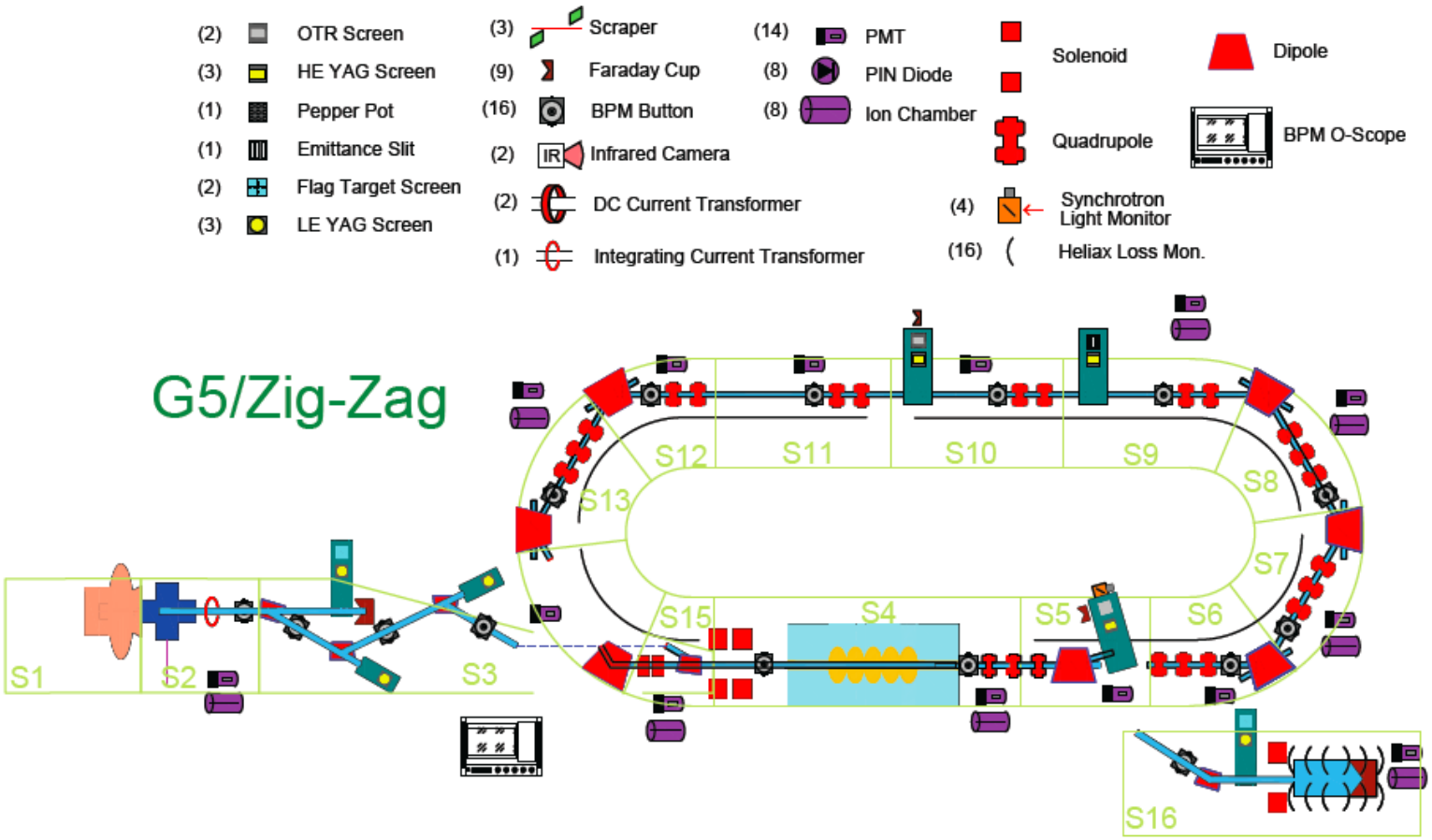

1. A laser creates an electron beam at the photo-cathode installed inside the SRF gun
2. SRF gun accelerates the beam up to 2.5 MeV
3. HTS solenoid focuses the beam
4. Beam propagates along the diagnostic line (where set of beam measurement will be performed)
5. Beam stops by Faraday Cup at the end of straight line for initial gun test.

ERL Layout, 3-D view

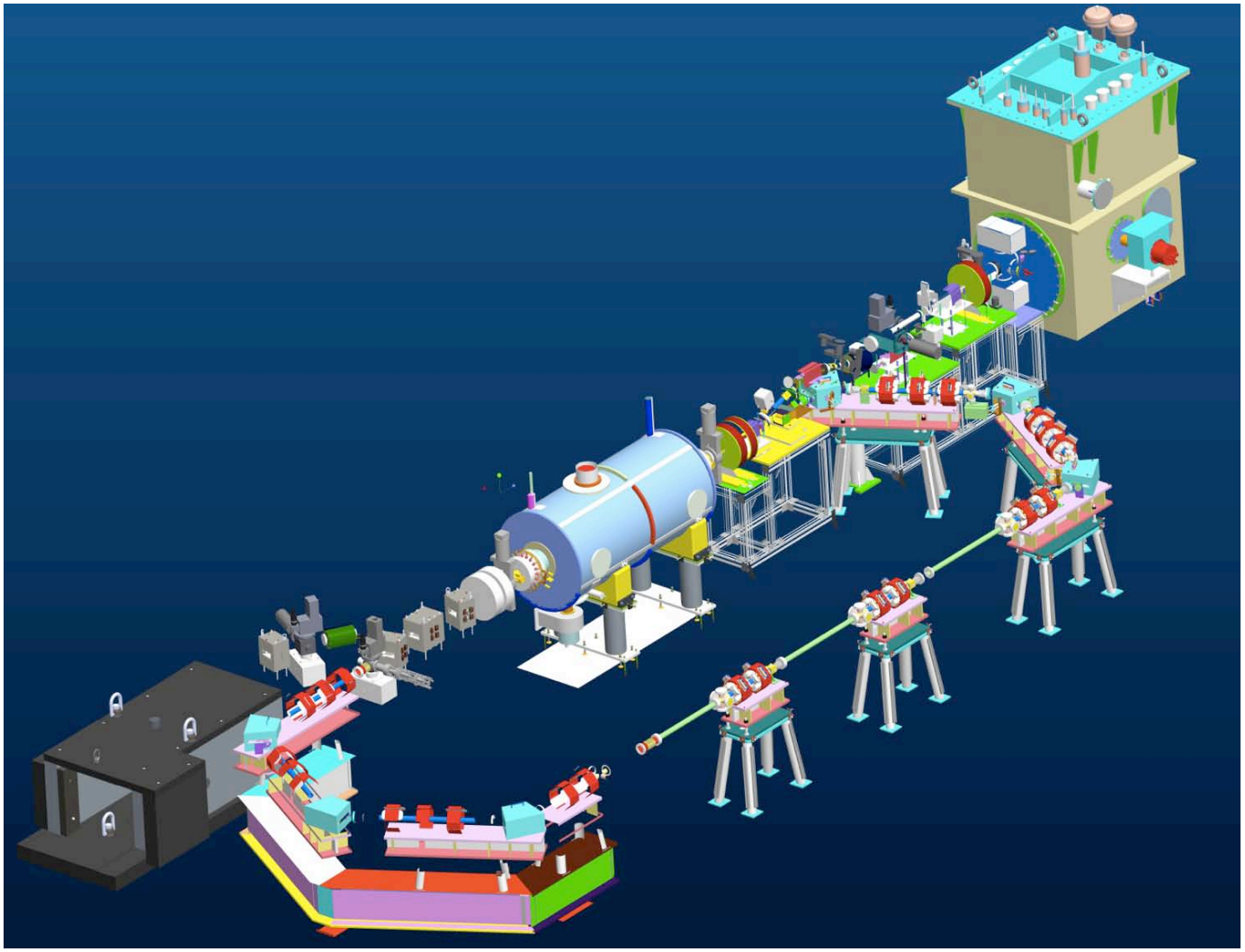

SRF Photocathode RF gun

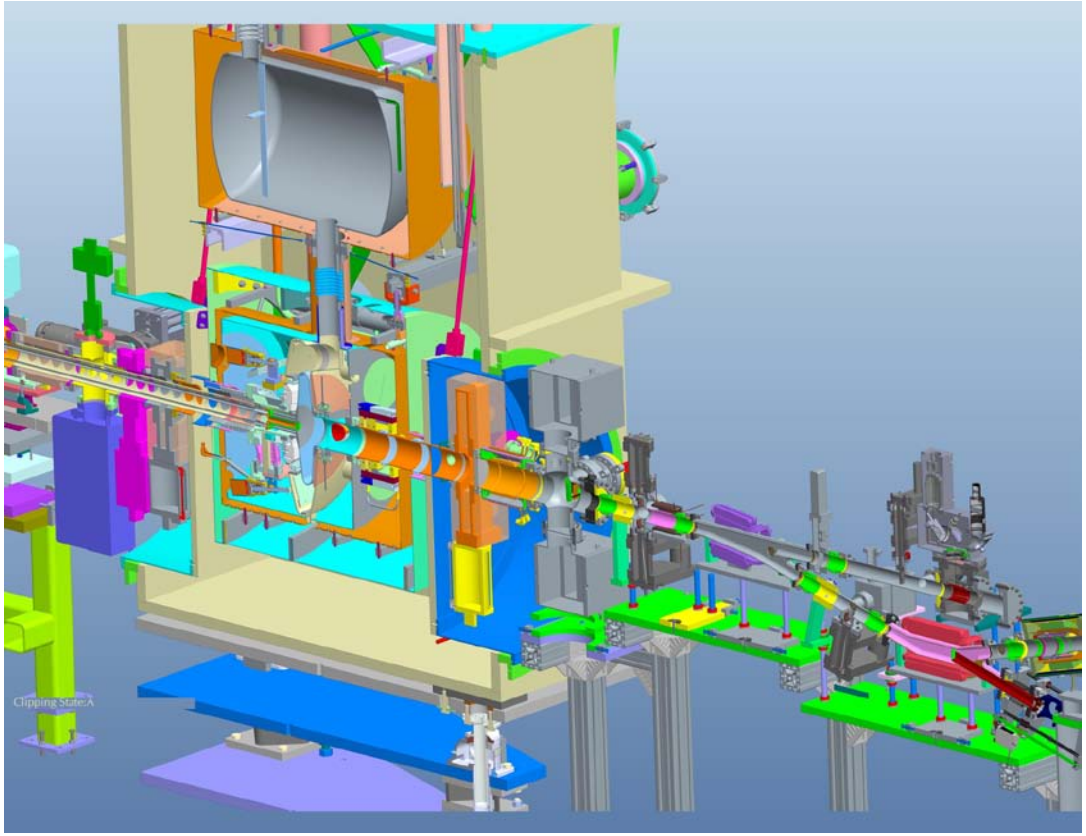

Where the 23 MeV beam stops

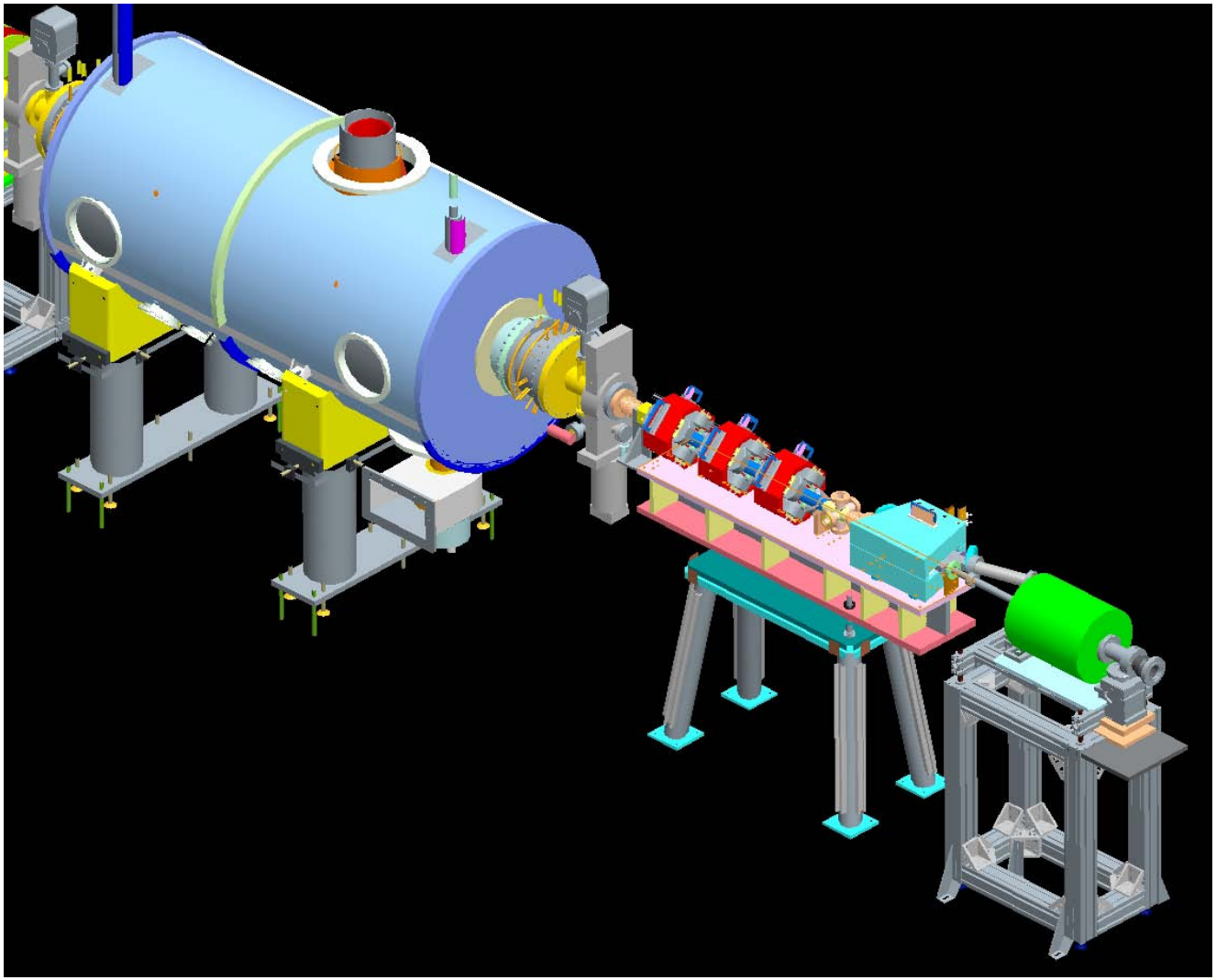

Downstream from linac

Goals of the low power beam-test

- Operate remotely from ERL control room
- Establish stable operation of SRF injector at
  - minimum current: from single bunch to low rep. rate trains. Controlled by Chipmunks, laser power, and monitored by ICT,BLM, and Faraday cup.
  - Reach minimum energy 1 MeV, desired energy 2.5 MeV. Controlled by SRF Gun voltage
- Beam from gun expected in December.
- Beam through the linac early 2013.

Measurements: beam from gun

Diagnostics:

- Faraday Cup,
- YAG screen beam profile monitor (YAG) optional,
- Integrated Current Transformer (ICT).

At very low macro-pulse repetition-rate.

- Measure charge out of gun as a function of gun-to-laser phase.
- Increase charge gradually until good signal detected

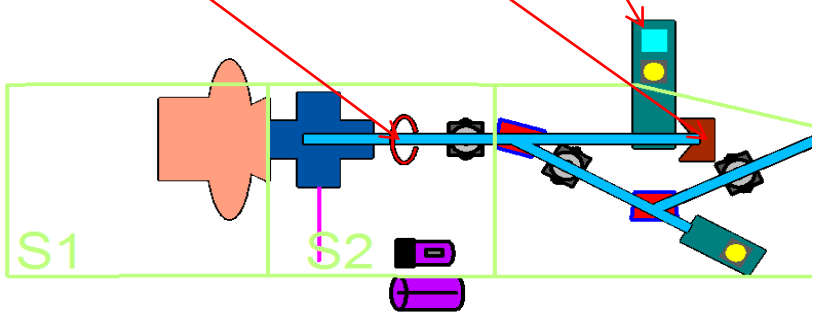

- Dipole bending angles of -15°, +30°, -30° and +15°, (8.1 Amp and 9.1 Amp) All dipoles are powered 10 amp power supplies. First bend is down.

Main Beam parameters for first beam test.
70 watts is much more than needed.

	Simple example(*) Exploratory	Measure	Studies
Charge per bunch:	10 pC	100 pC	500 pC
Maximum energy:	2.5 MeV	23 MeV	23 MeV
Pulse repetition frequency	1 Hz	100 Hz	1000 Hz
Average current:	10 pA	10 nA	500 nA
Average power:	25 µA	230 mW	11 W

(*) At 20 MeV gain from the linac the duty factor is limited by quench to 0.1, however this has not been taken as a credit.

Laser pulse trains

- Pulse train period is adjustable and given by NT_0, where T_0 is the period between laser pulses, T_0=1/9.383 MHz, and N is an adjustable integer. The pulse train repetition rate is thus adjustable between 0 to 10 kHz.
- Within a pulse train, the duration over which the laser pulses are on is nT_0, which is controlled by a setting of a gate, from a single pulse to 90% of NT_0.
- The pulse repetition rate used above is 9.383n/N MHz

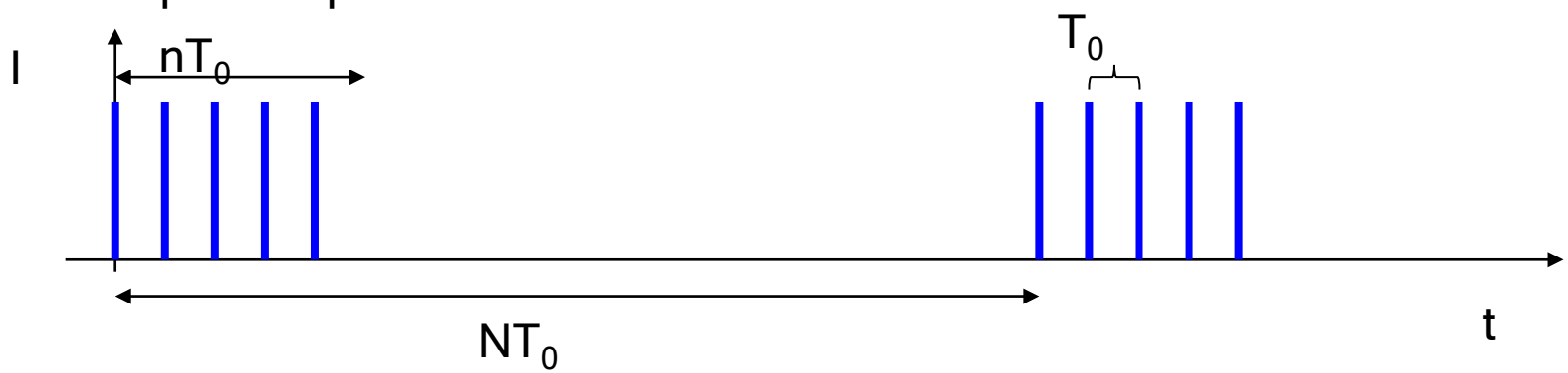

Beam stop for the 5-cell

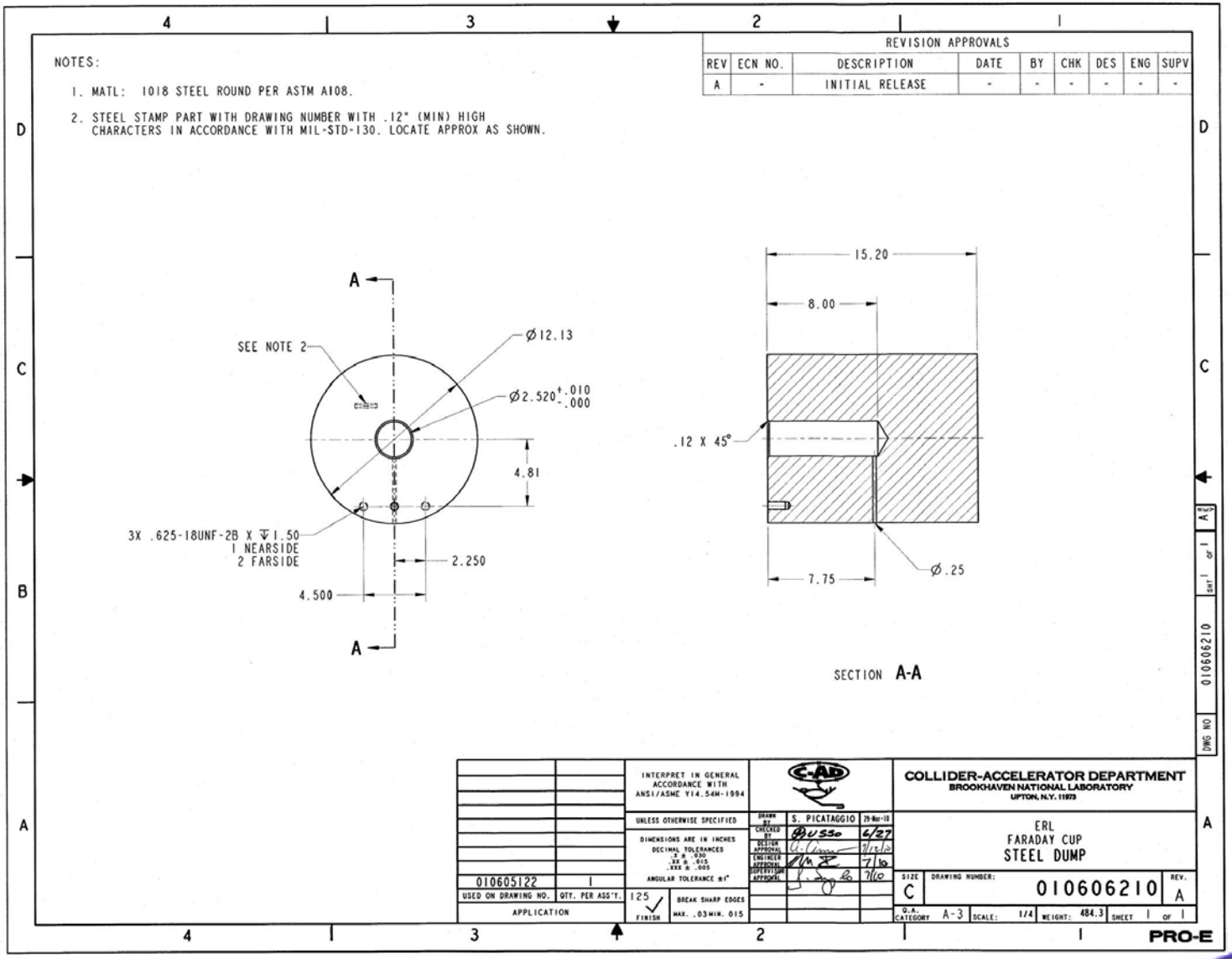

Radiation estimates

Reference: C-A/AP/454 7/12 Analytic Approximate Radiation Effects due to Bremsstrahlung, I. Ben-Zvi

- For 70 watts of beam power, at 2.5 MeV out of the gun, the X-ray power is 1.7 watts. The attenuation provided by 1 cm of flange material is 0.044, and 1.28 meters of concrete provides an attenuation of 2.5×10^{-4}. After a build up factor of 16 the dose is conservatively estimated at 0.27 mRad/hour uniform distribution at a distance of 5 meter from the source.
- For 70 watts of beam power, at 23 MeV out of the linac, the X-ray power is 14 watts. The attenuation provided by 12.2 cm (15 cm in forward direction) of beam stop is 0.0027, and 1.28 meters of concrete provides an attenuation of 2.5×10^{-4}. After a build up factor of 16 the dose is conservatively estimated at 1 mRad/hour at a distance of 5 meter from the source. The relativistic beaming in the forward direction, assuming a 10 degree scatter broadening leads to 1.7 mRad/hour.

MCPNX calculation by Kin Yip

Radiation estimates related to the Energy Recovery LINAC facility (ERL)

- 54 MeV and 2 mA resulted 1.6×10^3 mRem/h outside shielding (no beam stop!)
- Scaling of that to 23 MeV, 3 μA (70 watt) results in 1 mRem/h.
- It seems that my previous estimate is extremely conservative.

Additional considerations

- The generated, un-attenuated radiation will be inside the ERL accelerator enclosure with a fully operational Access Control System. There would be no risk of generating 5 mRem/h outside the enclosure
- During commissioning, routine radiation surveys by qualified Radiological Control Technicians using portable radiation monitors to verify the radiation-protection controls on a regular basis will be performed.
- During operations, the PPS will be interlocked to a chipmunk.

Steps forward to success of First Beam test:

Prerequisites before to start the beam test:
All equipment has been installed and tested:

1. Cryogenic system completed.
2. Refrigerator operational.
3. SRF Gun installed and cold test performed.
4. Vacuum system.
5. G5test Magnets, power supplies, controls – for 23 MeV test.
6. Beam instrumentation
7. Machine protection system
8. Control system
9. All cables pulled/connected and checked.
10. Laser and laser transport.
11. Cathode, deposition chamber, transport cart.
12. All magnets, laser equipment and instrumentation surveyed and aligned.

Most of the systems/subsystems were reviewed, tested and or presented during the June 4, 2012 ASSRC review.

All safety documentation (commissioning procedures, work planning) completed and approved.

Thank you for your attention

Backup slides: MPS

MPS System

- MPS Is protect the machine (ERL components) from equipment and/or human miss behavior.
- Primarily role was to protect the 50 kW and 1MW RF Systems as well as the SRF cavities
- Now it protects instrumentation, vacuum system, magnets
- Upon fault, an interlock is generated in less than 5 µs (system response time ~ 3-4 µs)
- Fail-safe input states in case of a broken or disconnection wire.
- Faults are latched and time-stamped
- Faults are cleared only via a software (user) reset

MPS protects machinery by summarizing all the inputs and sending it as a summary to RF. Although RF is continuously checking its own critical devices and PASS.

Operation Modes

- 0 Safe: No e-beam, No laser beam, No RF
  - Laser shutter, RF off
- 1 Linac RF studies: No e-beam, No laser beam, RF On
  - Laser shutter, Linac RF allowed
- 2 SRF Gun studies: No e-beam, No laser beam, RF On
  - Laser shutter, SRF cavity RF allowed
- 3 Laser studies/alignment: No e-beam, No RF, Laser on
  - RF is OFF, Laser beam allowed
- 4 Lower current/single pulse (Imax=TBD): e-beam, laser, RF: allowed
- 5 Design current (Imax=1uA) : e-beam, laser, RF: allowed
- 6 Custom

MPS ins/outs table (short version)

Modes	Current limet	Cryo	Vacuum	Gun Arc Det	Linac Arc Det	Water	OTR	YaG	Cathode in place	Gun RF	Linac RF	Laser
0	disable	disable	enable	disable	disable	disable	disable	disable	disable	off	off	off
1	disable	enable	enable	disable	enable	enable	disable	disable	disable	off	on	off
2	disable	enable	enable	enable	disable	enable	disable	disable	(in or out)	on	off	off
3	disable	disable	enable	disable	disable	disable	disable	disable	disable	off	off	go
4	Low limit	enable	enable	enable	enable	enable	enable	enable	(in)	go	go	go
5	High limit	enable	enable	enable	enable	enable	enable	(Out)	(in)	go	go	go
6	Custom	Enable by default, any disabled option should come back to enable after maximum 8 hours										

MPS detailed inputs list

System	MPS INPUTS	Type of Signal	Safe mode Mode 0	5cell studies Mode 1	SRF Gun studies Mode 2	Laser studies Mode 3	Low Current (TE Mode 4	Maximum Cu Mode 5	Custom all inpu Mode 6
SRF:									
	RF 50kW Circulator ArcDet	TTL	OFF	ON	OFF	OFF	ON	ON	ON
	RF 5-Cell Cavity AirSide ArcDet	TTL	OFF	ON	OFF	OFF	ON	ON	ON
	RF 5-Cell Cavity VacSide ArcDet	TTL	OFF	ON	OFF	OFF	ON	ON	ON
	RF Gun FPC1 VacSide ArcDet	TTL	OFF	OFF	ON	OFF	ON	ON	ON
	RF Gun FPC1 AirSide ArcDet	TTL	OFF	OFF	ON	OFF	ON	ON	ON
	RF Gun FPC2 VacSide ArcDet	TTL	OFF	OFF	ON	OFF	ON	ON	ON
	RF Gun FPC2 AirSide ArcDet	TTL	OFF	OFF	ON	OFF	ON	ON	ON
	RF Klystron Window ArcDet	TTL	OFF	OFF	ON	OFF	ON	ON	ON
	RF Klystron Circulator ArcDet	TTL	OFF	OFF	ON	OFF	ON	ON	ON
LLRF:									
	One signal for Gun	TTL	OFF	OFF	ON	OFF	ON	ON	ON
	One signal for 5-cell	TTL	OFF	ON	OFF	OFF	ON	ON	ON
PASS:									
	PASS	Relay	OFF	ON	ON	ON	ON	ON	ON
Cryo:									
	Cryo (5-Cell)	Relay	OFF	ON	OFF	OFF	ON	ON	ON
	Cryo (Gun)	Relay	OFF	OFF	ON	OFF	ON	ON	ON
Vacuum:									
	Vacuum 5-Cell Beam	Relay	OFF	ON	OFF	OFF	ON	ON	ON
	Vacuum Beamline Gate Valve	Relay	OFF	ON	OFF	OFF	ON	ON	ON
	Vacuum Gun FPC Beam	Relay	OFF	OFF	ON	OFF	ON	ON	ON
Water:									
	Water 5-Cell FPC	Relay	OFF	ON	OFF	OFF	ON	ON	ON
	Water 5-Cell FPC Flow	Relay	OFF	ON	OFF	OFF	ON	ON	ON
	Water Gun Temperature	Relay	OFF	OFF	ON	OFF	ON	ON	ON
	Water Gun Flow	Relay	OFF	OFF	ON	OFF	ON	ON	ON
SC Solenoid:									
	Coil1 - QD	Digital	OFF	OFF	ON	ON	ON	ON	ON
	Coil2 - QD	Digital	OFF	OFF	ON	ON	ON	ON	ON
Instrumentation:									
	BPM (16)	TTL	OFF	OFF	OFF	OFF	OFF	OFF	ON
	Profile Monitor (5)	Relay	OFF	OFF	OFF	OFF	OFF	ON	ON
	Pepper Pot (2)	Relay	OFF	OFF	OFF	OFF	OFF	ON	ON
	Beam Loss	TTL	OFF	OFF	OFF	ON	ON	ON	ON
	FCT (ICT)	Analog	OFF	OFF	OFF	OFF	ON	ON	ON
	Scrapers (6)	Relay	OFF	OFF	OFF	OFF	OFF	ON	ON
	Cathode Clamp (Fully extracted)	Relay	OFF	OFF	ON	OFF	ON	ON	ON
	Cathode Clamp (Fully inserted)	Relay	OFF	OFF	ON	OFF	ON	ON	ON
	Heartbeat	Relay	OFF	OFF	OFF	OFF	ON	ON	ON
Laser:									
	Digital Input		OFF	OFF	OFF	ON	ON	ON	ON
	Current Beam Mode	PET page	OFF	OFF	OFF	ON	ON	ON	ON