Collider-Accelerator Department

BROOKHAVEN NATIONAL LABORATORY

Building 911B – P.O. Box 5000
Upton, NY 11973-5000
Phone 631 344 7124
Fax 631 344 5568
beavis@bnl.gov
www.bnl.gov

managed by Brookhaven Science Associates
for the U.S. Department of Energy

Memo

date: *July 29, 2009*

to: *RSC*

from: *D. Beavis*

subject: *Penetrations for Stochastic Cooling at 11 O'clock*

The placement of stochastic cooling at 11 O'clock requires that there be penetrations to the berm with as minimal distance as possible. It is proposed that two penetrations be made to the berm to allow signal cables and utilities to be delivered to the cavities. In addition there will be an electronics house on the berm over the penetrations. Figure 1 shows details of the shielding. The electronics house, see Figure 2, represents the first structure to be placed on the beam that personnel may occupy for a substantial period of time. The dose to personnel in the building will be examined.

The dose directly through the soil can be estimated using a simple formula. Since the stochastic cooling cavities have a small aperture when in operation I will assume that the entire beam can be lost on the cavities in a beam fault. Reference 1 used an equation based on appendix 15 of the RHIC SAD that gives the dose due to a full beam fault as

$$38800*\exp(-d/2.2)/(rt*rt) \text{ (in rem-ft}^2\text{)},$$

where rt is the transverse distance from the machine component to the location under consideration and d is the thickness of the soil shield in feet. This formula is for location where the dose is maximum. A full beam fault is estimated to produce 110 mrem based on the six feet to the tunnel roof and the 19 feet of soil thickness.

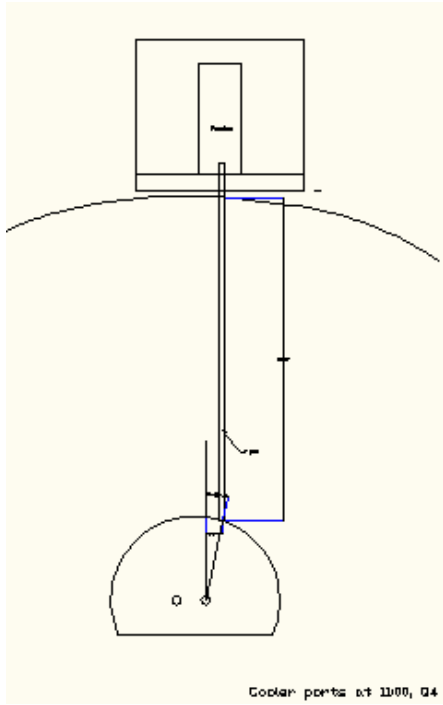

Figure 1. Vertical view of pipes.

The two penetrations will contribute additional dose near their exit of the soil. The dose at the end of the pipe can be estimated using the curves provided in Chapter 2 of Sullivan[2]. Empty pipes are assumed for the moment. The dose out the 4 inch (3 inch) diameter pipe is 150 mrem (75 mrem) for a full beam fault. A 10 degree angle is used from the source to the pipe opening in the tunnel. There are several factors that make these estimates very conservative. Firstly, the dose extends only over the area of the pipe and is not a whole body doses. Secondly, the pipe must exit the berm and extend into the electronics house. The radiation field will be more diffuse in locations where personnel can be exposed. Assuming a 45 degree half-angle opening cone and a distance of 1 foot provides a reduction factor of 0.1. Finally, most of the area of each penetration is expected to have cables (see figure 3), which will substantially reduce the amount of radiation that can be transmitted to the end of the pipe.

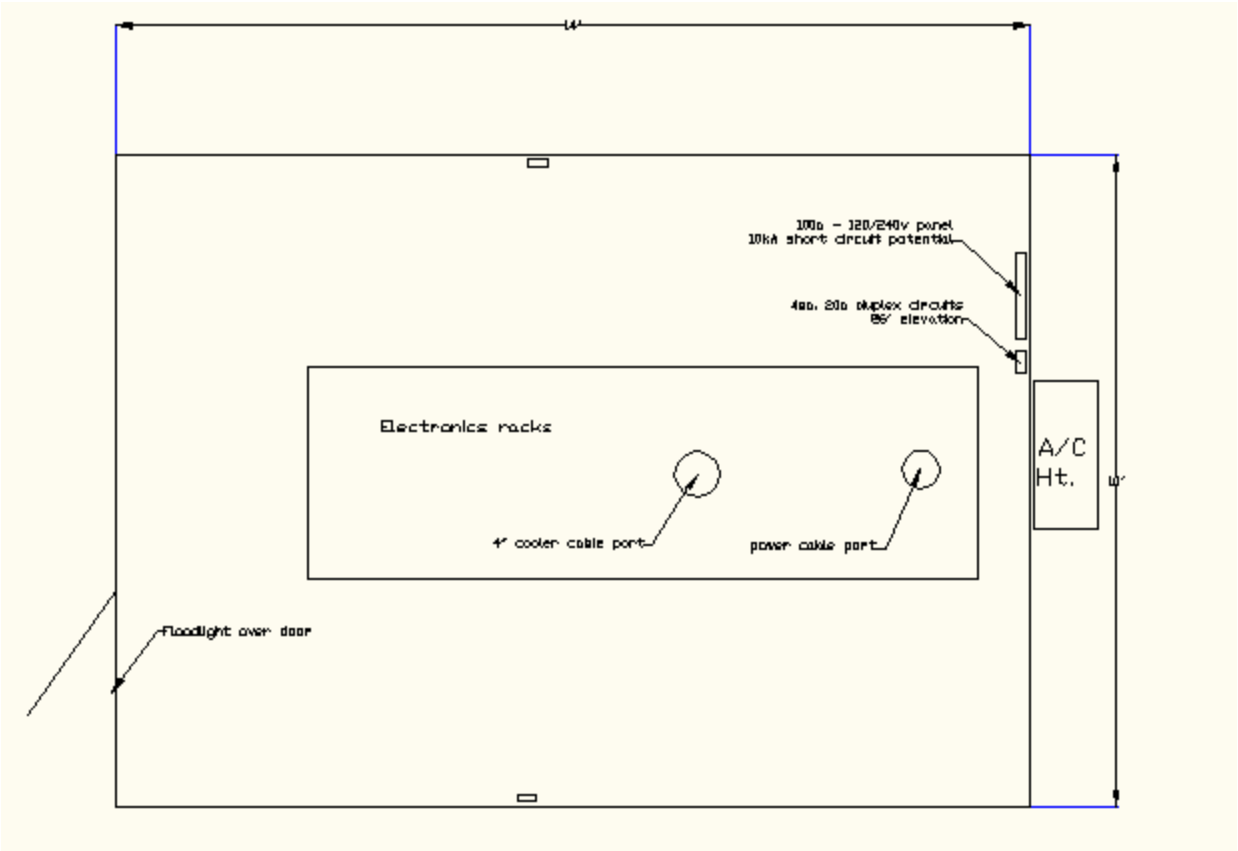

Figure 2. Plan view of the electronics house.

The average dose rates on the berm are expected to be very small from chronic losses The electronic house should be posted as a Radiation Area-TLD required until the chronic exposure levels are better understood. A monitor TLD should be placed about 1 foot from the exit of the pipe and another elsewhere in the electronics house to determine the area levels for personnel. **(CK-RHIC-Fy10-261)**

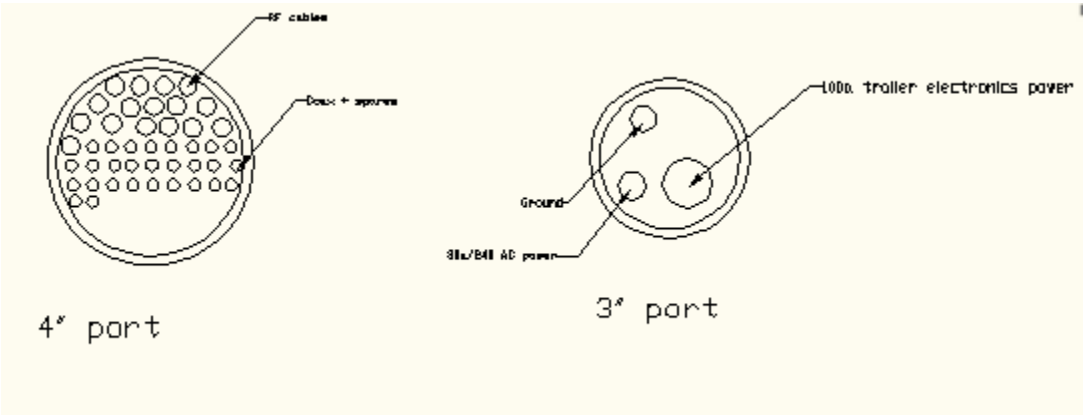

Figure 3. Cross-section view of the pipes with planned cables.

References

1. D. Beavis Memorandum, "Labyrinth Calculations in RHIC SAD", Dec. 16, 2008
2. A.H. Sullivan, A Guide to Radiation and Radioactivity Levels near High Energy Particle Accelerators, 1992.

CC:

RSC
A. Pendzick
A. Drees
RSC RHIC file