Collider-Accelerator Department

BROOKHAVEN NATIONAL LABORATORY

Building 911B – P.O. Box 5000
Upton, NY 11973-5000
Phone 631 344 7124
Fax 631 344 5568
beavis@bnl.gov
www.bnl.gov

managed by Brookhaven Science Associates
for the U.S. Department of Energy

Memo

date: *April 6, 2009 – Issued to RSC on August 3, 2009*

to: *RSC*

from: *D. Beavis*

subject: *Initial Radiation Calculations for the VTF Blockhouse*

The initial calculations used to evaluate the Vertical Dewar Test Facitity (VTF) are presented. Simple formulas for the generation of x-rays from electrons are used. In addition simple shielding estimated are done using Tenth Value Layers (TVLs). The estimates are expected to conservative.

An elevation view of a Dewar in the blockhouse is shown in figure 1. A superconducting RF cavity is located in the bottom portion of the Dewar. The top of the cavity will be at least 3.5 meters from the roof. The roof is a sliding plate with light concrete 22 inches thick. Access to the Dewar is done by sliding the roof which is on rollers. There are external stairs for personnel to enter over the top of the wall and onto an elevated platform that is not shown in figure 1.

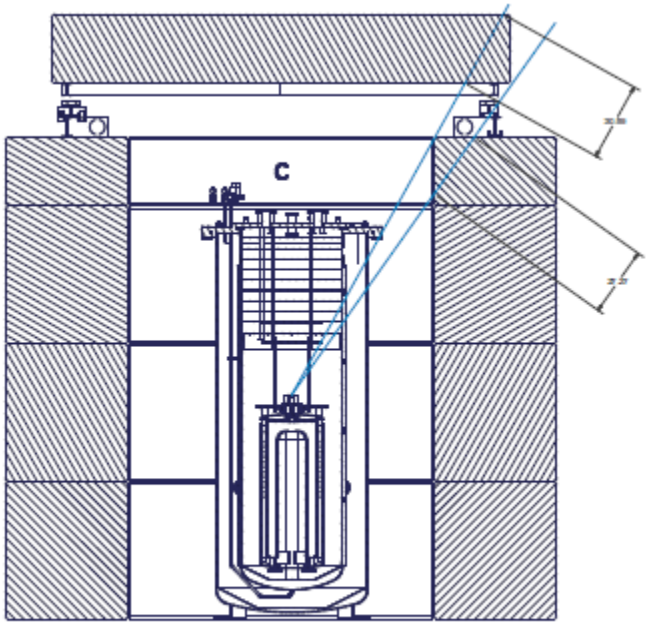

Figure 1. Elevation View of VTF blockhouse.

The sides wall are a single layer of four feet of light concrete. This initial design was discussed in a meeting in March 2009. It was requested that chipmunks be used on the roof to limit the amount of concrete that the roller system needs to move. The opening along the edge of the roof beams for the rails and bearings needs to be backed with shielding to reduce the dose. An evaluation of the amount of concrete was requested.

Figure 3.5 of NCRP Report no. 144[1] was used to evaluate the x-rays generated from potential field emissions. The cavities that will be tested are expected to have a total field gradient of 20 MeV. It is not expected that many locations in the cavity could emit electrons which would accelerate over the 20 MeV. A value of 10 MeV will be used for the estimates. This assumption impacts the top of the roof over the Dewar. The RF power supply has a maximum power of 200 Watts. It will be assumed that this entire power can go into field emission electrons. Based on reference 1 the forward 10 MeV electrons create a dose rate of 34,000 rads/hr at a meter. At 90 degrees the dose rate is 1800 rads/hr at a meter.

The dose rate outside the shielding can be estimated[2] by using TVLs for the materials. For 10 MeV electrons the TVL for the forward light concrete is 38 cm. The side wall has a TVL of 32 cm. Taking into account the distances, the maximum possible dose rate out the roof is 50 rads/hr. The maximum possible dose rate out the light concrete on the sides is 50 mrads/hr. We expect these estimates to be conservative. The roof is not intended to be occupied while the cavity is operating. The next direct shine location could be the crane cab which would have reduced doses due to the distance. It is recommended that two interlocking chipmunks be placed on the roof to limit the dose. The chipmunks along with the roof micro-switches would be in redundant interlock strings. This design could limit the operation of the cavity. To avoid such limitations more roof shielding would need to be added.

The chipmunks on the roof also limit the dose rate out the side wall shielding to acceptable levels. Without more roof shielding, the dose rate out the sides would be limited to 0.l mrad/hr.

The gap at the between the top of the walls and the roof is a weak point for potential side exposure. The potential dose can be estimated using albedo coefficients[3]. Assuming that there is a one foot thick concrete rim on the edge than the dose rate would be less than 600 mrad/hr The chipmunks on the roof would limit this to 0.6 mrem/hr. The rim of concrete should overlap several inches past the roof and be as close as possible.

Any penetrations that are planned for the shielding have not been examined. The cracks must be kept at a minimum in the side wall shielding. They will be surveys on initial commissioning of the facility. If necessary the cracks could be covered with a layer of lead on the inside of the blockhouse.

The dose rate due to neutrons can be evaluated using Figure 3.12 of reference 1. For materials such as copper a neutron dose rate from 10 MeV electrons is expected to be 50 rem/hr at a meter, for 200 Watts. The attenuation curves in Figure 4.5 can be used to estimate the effective of the roof and side wall shielding. In either case the dominate dose comes from the x-rays and not the neutrons.

References

1. NCRP Report no. 144, Radiation Protection for Particle Accelerator Facilities, National Council on radiation Protection and Measurements, 2003
2. See Figure 4.1 and Table 4.2 of reference 1.
3. See section 3.24 of reference 1.

CC:

Ilan Ben-Zvi
Andrew Burrill
RSC VTF file