Collider-Accelerator Department

BROOKHAVEN NATIONAL LABORATORY

Building 911B – P.O. Box 5000
Upton, NY 11973-5000
Phone 631 344 7124
Fax 631 344 5568
beavis@bnl.gov
www.bnl.gov

managed by Brookhaven Science Associates
for the U.S. Department of Energy

Memo

date: *March 25, 2013*

to: *RSC*

from: *D. Beavis*

subject: *Update on VTF Shielding and Radiation Protection*

Introduction

The VTF blockhouse is being prepared to test the first cavity, which will generate x-rays. The shielding was inspected and the calculations redone to account for changes in the design. The as-built shielding drawings are in the process of being finalized for signatures as QA1 shielding prints.

It will be concluded that the present shielding design coupled with the proper location of the two chipmunks should be adequate for testing the present cavity and conducting appropriate radiation surveys of the shielding. Cracks in the single layer design are an issue that should be carefully examined in the surveys.

Changes from Initial Design Assumptions

Several important changes have occurred since the initial design of the blockhouse. The shielding was visually inspected to ensure that the correct numbers and materials were utilized in the updated calculations. The initial design[1] assumed that the roof was 22 inches of light concrete. The use of chipmunks on the roof for protecting against large x-ray production events was based on the roof being essentially the weakest point of the shielding, thus allowing radiation levels on the roof to set an upper limit for surrounding radiation levels. The actual shielding design used 27 inches of heavy concrete for the roof. Based on this change and other design changes the roof does not have the highest radiation levels for low voltage operations.

The final design has a weak shielding location on the south side which allows the cryostat to be rigged without rigging shielding. The area can be seen in Figure 4. A three inch thick layer of steel is part of the roof mechanism to shadow this area. The lower one foot has a layer of concrete one-foot thick. This arrangement was not part of the conceptual design. The dose in this area will be examined and compared to the utility port and the roof.

The conceptual design did not have details for utility ports. It was assumed that the utility ports would be small in size similar to the small adjacent blockhouse. The project decided that a larger port would be used (see figures 2&3), which impacts the ratio of radiation on the roof to that

exiting the port. There are side barriers that will be installed to prevent access between the shadow blocks and the main shielding. The shine off the surface of the shadow blocks can expose personnel in the adjacent areas to x-rays. The potential x-ray dose will be examined using albedo coefficients.

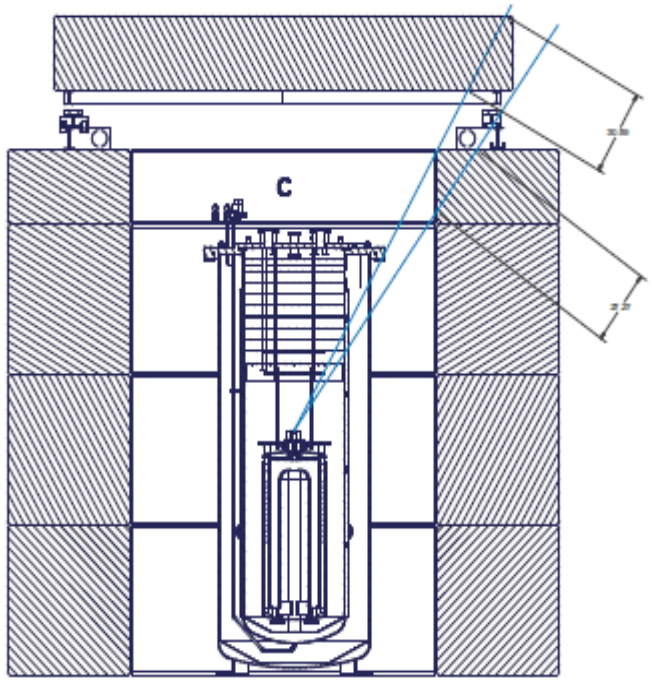

Figure 1: Conceptual side view of the VTF blockhouse with the cryostat inside. The rays indicate the top of a cavity where x-ray may originate.

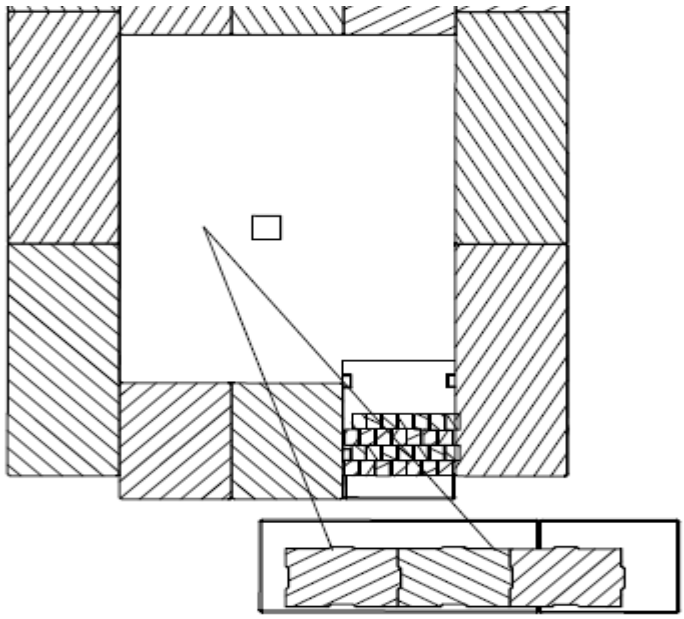

SECTION A-A
SCALE 0.02 : 1

Figure 2: Plan view of the utility port and the shadow shielding. The top portion of the port is packed with concrete blocks.

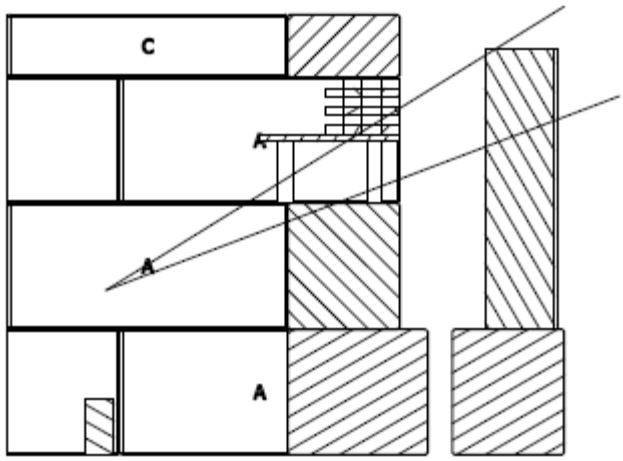

SECTION B-B
SCALE 0.02 : 1

Figure 3: The side view of the utility port with the shadow shielding.

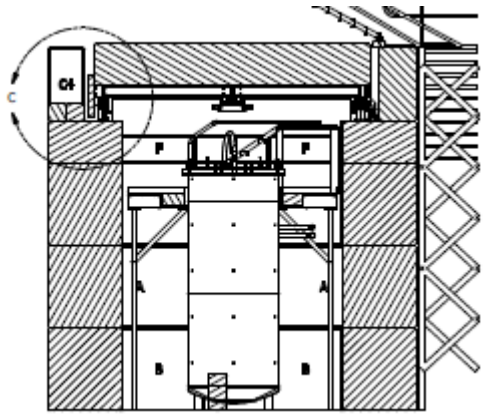

Figure 4: Details of the actual design with the slot to allow rigging of the cryostat.

Simple Calculations

The cavity that will be tested in the VTF has a maximum voltage of 3 MV and a maximum possible power of 100 W. Cavities with up to 200 W of power and up to 10-20 MV may be tested in the future. Each cavity that is to be tested in the blockhouse must be examined for operating parameters and field orientation.

Permanent RSC checklist item for startup of a new cavity is that the orientation, maximum voltage, and power have been examined relative to the shielding.
ATS-VTF- S. Belomestnykh-April 15, 2013

The gamma ray production and shielding attenuation factors are taken[2] from NCRP Report No. 144. Figure 3.5 of reference 2 is used for the gamma ray production as a function of energy. Reading from the figure the estimated doses at three energies are:

Dose Rates (1 kW at 1 meter)

Angle/energy	1 MeV	3 MeV	10 MeV
90 degrees	$2.8*10^3$ rads/hr	$7*10^3$ rads/hr	10^4 rads/hr
0 degrees	$2.8*10^3$ rads/hr	$2*10^4$ rads/hr	$2*10^5$ rads/hr

The maximum power will be assumed to be 100W for 1 and 3 MeV and 200W for 10 MeV. The dose rates at a meter for the maximum available energy are:

Maximum Dose Rates at 1 meter (Rads/hr)

Angle/energy	1 MeV	3 MeV	10 MeV
90 degrees	280	700	2000
0 degrees	280	2000	40000

The TVLs for the light concrete, heavy concrete and the steel are needed to obtain the estimated dose rate outside the enclosure. The curves from Fig. 4.1 of reference 2 are used to obtain the following simple TVLs for light concrete, heavy concrete, and steel:

TVLs for Shielding materials in the VTF Structure (in cm)

Material	1 MeV	3 MeV	10 MeV
Light concrete	17	23	38
Heavy Concrete	11	16	26
Steel	5	7.6	10

The dose rate outside the enclosure can be estimated using distance, the source term, albedo coefficients[3], and the shielding attenuation for each area and energy. The roof area is swept and secured. The area between the shadow blocks and the main shielding has barriers to prevent access. The utility port can cause potential exposure to areas that can be occupied near the shadow blocks due to the "reflection" off the shadow blocks. The area at the rigging slot is also secured with the VTF roof. It is possible that a person standing on the small blockhouse roof[4] could be exposed to the shine from the rigging slot. The rigging slot has a minimum of one foot of concrete behind the steel plate but only for the first foot in height. A crude average of the photon fluence striking the roof surface has been used. The table below assumes there is no concrete behind the steel.

Maximum Dose rates (mrads/hr)

Location	1 MeV	3 MeV	10 MeV
Roof	0.02	4.8	4800
Side wall	0.003	0.74	214
Rigging Slot	54	860	14600
Shadow block reflection	95	240	680

Decreasing the energy (voltage) will eventually lead to the radiation reflected off the shadow blocks as being the largest external leakage. However, the source at 100 keV is about 100 times lower than at 1 MeV. With limited source power this does not become a problem. The dose reduction provided by the cryostat has not been accounted for. The vessel has about 1.9 inches of stainless steel which would reduce all numbers by a factor of four at 3 MeV.

Based on these simple calculations the best locations for the radiation monitors would be the rigging slot and in the shine from the shadow blocks. However, for operations at 10 MV this might prevent the cavity from being tested. The alternative is to use the roof and the shine from the shadow block. At high voltage both provide protection and at very low voltage the shadow block area has protection.

The voltage and power used for the generation of x-rays is not the anticipated routine operation of the cavity. It is the maximum possible incident that could occur and may actually not be possible. It is expected that the routine testing of the cavity will generate substantially less x-rays than used in this analysis.

The use of the graphs and TVLs are expected to be conservation. The TVLs are particularly conservative for the side walls since the TVLs are derived for the forward direction and underestimate the effectiveness of the side shielding. It was decided to compare the estimates above with calculations using MCNPX.

MCNPX Calculations

The Monte Carlo program MCNPX[5] was used to estimate the dose rates from electrons striking a copper target inside the cryostat. The top and side walls of the cryostat are approximated as single layers of stainless steel. Azimuthal symmetry was used to reduce the computer time required for the computations. This should provide accurate enough estimates for evaluating the design. The geometry in the MCNPX model is shown in Fig. 5. The side walls are light concrete. The roof is treated as heavy concrete with a density of 3.5 gm/cc but with the same composition as the light concrete. The steel used for the rigging slot is three inches thick and no concrete has been placed behind it. The model used in MCNPX is shown in figure 5. The side walls are taller than the actual blockhouse and there is no floor. These minor deviations from the actual design should not be an issue for this analysis.

The electrons strike a copper disk which is 1 cm thick and 4 cm in radius at surface 8. This is 3.6 meters before the concrete roof. The cryostat lid is treated as 4.9 cm of steel and the side wall as 4 cm of steel. Photon fluence is tallied at surfaces and then energy-dependent fluence-to-dose conversion factors are used to obtain the dose per electron.

The results for 10 MeV electrons have sufficient statistics to obtain the dose per electron outside of the shielding. The average dose at the roof center is $3.4*10^{-18}$ rads/e. The dose at a meter off center is $6.9*10^{-19}$ rads/e. The dose on the side wall directly across from the target is $1.0*10^{-20}$ rads/e. The dose outside the steel band attached to the movable roof is $9.4*10^{-19}$ rads/e. 200 W of 10 MeV electrons equates to $4.5*10^{17}$ e/hr striking the copper. The maximum dose rates are:

Maximum dose rates in mrads/hr for 10 MeV with 200W

Center of roof	On side of steel plate	Side wall across from target
1530	420	4.5

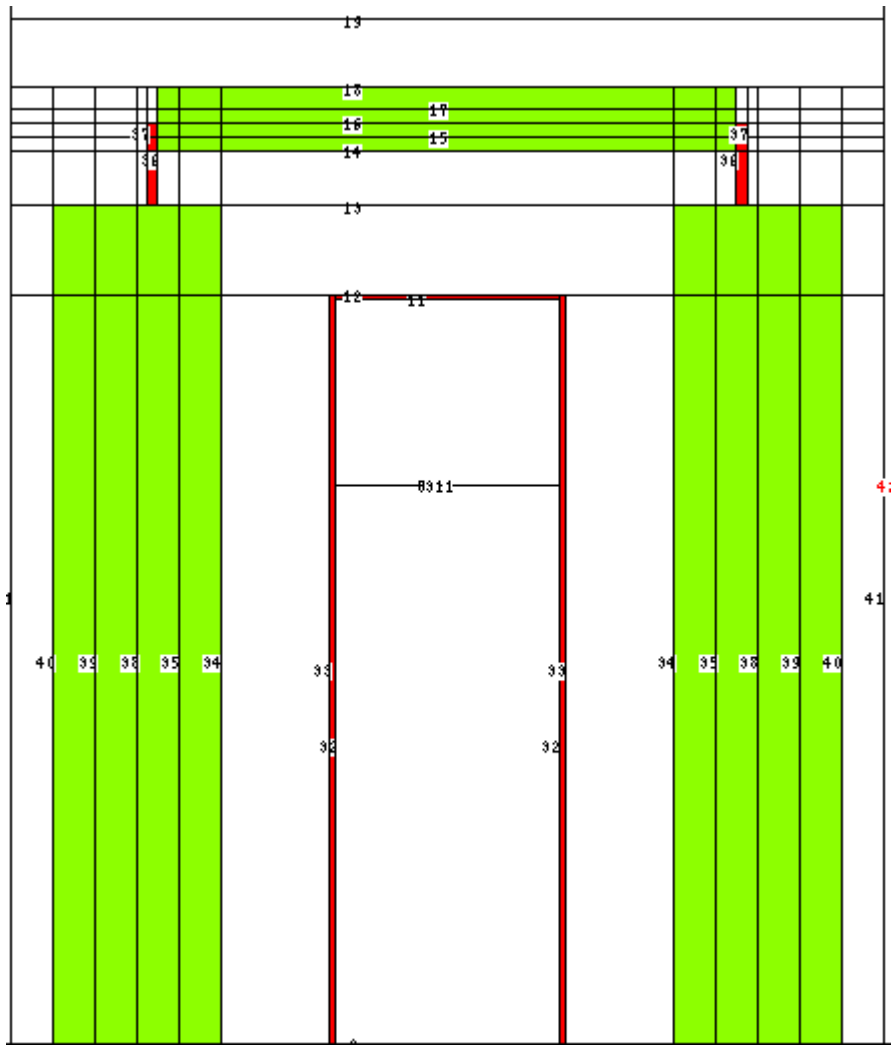

Figure 5: Model of the block house in MCNPX. The target is copper located a surface 8. The two-foot thick concrete the surrounds the movable roof has not been put in the model.

The results for 3 MeV did not have sufficient statistics to directly evaluate the dose outside several of the locations. However, the dose was tallied every 15 cm in the heavy concrete and every 30cm in the side walls. The dose can be extrapolated to the surfaces of the shield. The dose rate at the center of the roof surface is 1 mrad/hr. The dose per electron on the inside of the side wall is $1.8*10^{-17}$ rads/e and drops a factor of 1000 after two feet of light concrete. This provides a rough estimate of $1.8*10^{-23}$ rads/e on the outside of the side wall. This equates to a dose rate of 0.03 mrads/hr. This is approximately a factor of 20 lower than the thick target estimate with TVLs presented in the previous section. The roof was 50 times lower than the estimate with TVls and the thick target formula.

There were sufficient statistics to obtain the dose per electron outside the steel band on the movable roof. The dose is 15 mrad/hr with a factor of two accuracy.

Finally, the dose rate on the inside of the side wall can be used in the formulas for estimating the shine off the shadow blocks. The dose rate at 10 MeV (3 MeV) is 68 mrads/hr (14 mrads/hr).

A simple comparison of the two techniques is shown in the table below for 3 MeV and 10 MeV. The results from the first section have been reduced by a factor of four to account for the stainless steel used in the MCNPX model for the cryostat.

	3 MeV		**10 MeV**	
location	**formula**	**MCNPX**	**formula**	**MCNPX**
Roof	1	1	1200	1530
Side wall	.2	.03	50	4.5
Rigging slot	210	15	3600	420
Shadow block shine	60	14	170	70

The conclusion is that the values in the forward direction are reasonable using the thick target curves and TVLs. In the sideward direction the TVLs lead to conservative estimates for the dose outside the shielding. The conclusion for locating the chipmunks is the same in both cases. One chipmunk should be placed in an area sensitive to the shine off the shadow blocks for the utility port and the other on the roof or at the rigging slot. The roof is a more convenient location. For 3 MV operations of the present cavity a 2.5 mrad/hr interlock level is appropriate. For both chipmunks this is the lowest interlock setting for the chipmunks.

Permanent RSC checklist item for startup of a new cavity is to establish the location, alarm set-point ,and interlock set-point for the two chipmunks.
ATS-VTF- S. Belomestnykh-April 15, 2013

References

1. D. Beavis, “Initial Radiation Calculations for the VTF Blockhouse”, April 6, 2009; http://www.c-ad.bnl.gov/esfd/RSC/Memos/VTF_blckhse_2.pdf
2. NCRP Report no. 144, Radiation Protection for Particle Accelerator Facilities, National Council on radiation Protection and Measurements, 2003
3. An albedo coefficient of 0.03 was used in the calculations.
4. The distance is approximately 8 feet to the adjacent roof. The roof of the small block house will be posted for no entry for initial tests. The area around the VTF block has is posted that ladders are not allowed.
5. MCNPX version 2.7C was used for the calculations in this report. D. B. Pelowitz et al., “MCNPX 2.7.C Extensions”, LA-UR-10_00481, March 5, 2010.

CC:

I. Ben-Zvi
S. Belomestnykh
S. Pontieri
R. Porqueddu