Collider-Accelerator Department

BROOKHAVEN NATIONAL LABORATORY

Building 911B – P.O. Box 5000
Upton, NY 11973-5000
Phone 631 344 7124
Fax 631 344 5568
beavis@bnl.gov
www.bnl.gov

managed by Brookhaven Science Associates
for the U.S. Department of Energy

Memo

date: *November 24, 2009*

to: *RSC*

from: *D. Beavis*

subject: *Low Energy RHIC Operations – Potential Soil Activation*

A simple analysis will be given for the potential soil activation at RHIC for low energy ion operations. Most of the RHIC ring is an earthen covered tunnel. A few regions of the RGHIC ring such as the injection areas have concrete walls which provide additional shielding of the soil from beam losses. Some locations such as the collimators and beam dumps have buried geo-membranes that prevent the leaching of any activity from the soil. A simple generic analysis will be used to establish the potential for groundwater contamination due to soil activation from beam losses.

It will be concluded that losses during low energy operations will not create sufficient soil activation at RHIC to be of concern for groundwater contamination. This conclusion is based on using the BNL SBMS limits on tritium production which provides a factor of almost five over that allowed by the BNL SBMS limits on ^{22}Na. The Na concentrations would still be well below the Drinking Water Standard (DWS). Without the approved relaxing of the ^{22}Na concentration limits, the low energy operations this still pose little risk of groundwater contamination but will require additional diligence in monitoring beam losses.

There may be large uncertainties as to the actual amount of beam losses and the specific locations. However, there is a sufficient margin of safety for many weeks of low energy operations to occur this year. The operational experience gained this year will decrease the uncertainties for future long low energy ion operations and should demonstrate that such long operations of low energy ions does not pose a risk to groundwater quality.

Estimating Potential Groundwater Contamination

The potential for radio-nuclides to leach from activated soil into the groundwater below often establishes the limit for localized beam losses for accelerators at BNL with earthen shields. The guidance for BNL facilities is given in reference 1, which establishes concentration limits for ^{22}Na and ^{3}H to be less than 5% of the drinking water standard unless a higher limit has been approved by BNL Management. Based on experience and modeling the concentrations of ^{22}Na establish the maximum amount of beam that can be lost in an area when using the BNL-SBMS guidance. The C-AD has requested that the concentration limit be raised on the ^{22}Na so that the ^{3}H concentration sets the beam loss limit at 5% of the DWS. Based on the model the ^{22}Na concentration would still be less than 25% 0f the DWS. This note will assume that this request

will be granted by BNL Management and will estimate the beam loss limits based on tritium concentrations.

The potential soil activation calculations are based assuming fixed cross-sections for hadrons above 20 MeV. The number of hadrons above 20 MeV from beam losses can be calculated from Monte Carlo models. For a simple generic loss at 5 GeV the calculations[2] of A.J. Stevens will be used and scaled to a ten foot diameter tunnel. The resulting flux of high energy hadrons (E>20 MeV) is $5*10^{-6}$ h(E>20 MeV)/(cm^2-lost 5 GeV-proton). To satisfy the BNL requirement for tritium concentrations in the groundwater the local losses for a 5 GeV beam should be kept below $2*10^{15}$ per year. This is for a loss 10 feet from the soil interface and can depend on geometry. The target used in reference 2 provides for a conservative estimate. The number can be scaled to other energies, distances, etc depending on the amount of details and accuracy required.

Losses at Store

The potential beam losses for low energy operations have been estimated by T. Satogata[3]. The beam losses in the RHIC area have been divided into injection losses and losses at store. Most of the losses at store are assumed to be removed by the beam scrappers (collimators) and beam dumps. The remaining store losses are distributed around the RHIC ring with the most likely location to be the triplets for the intersection regions (IR). Other potential loss locations can easily be scaled to the results given at the triplets. The blue and yellow ring triplets sit side by side and we will treat them as a single loss for the soil activation estimate. If the beta functions are the same for all IR then the loss can be divided into 6 pairs of loss points. If the two experimental IR have larger beta functions in their triplets, then there are 2 pairs of loss points.
To be conservative we will assume there are 2 pairs of loss points of equal weight. The average amount of beam that can be lost in the triplets is $4*(2*10^{15}$ nucleons at 5 GeV per year).

The losses at store given in reference 3 are listed below for the intended beam energies and the allowed weeks of operation based on the losses in the triplets. The excess loss is the beam loss that is not captured by the collimators or dumps. The weeks of operations is then calculated based on the equivalent beam loss at 10.4 GeV and the BNL concentration limit.

Table I: Low Energy Store Losses

Beam Energy in GeV/nucleon	Excess loss in GeV-nuc./hr (Ref. 3)	Loss in nuc./hr	Loss in 10.4 GeVequivalent nucleons per hour	Weeks of operations (BNl-^{3}H)
2.5	$8.2*10^{12}$	$3.3*10^{12}$	$1.0*10^{12}$	83
3.85	$12.6*10^{12}$	$3.2*10^{12}$	$1.5*10^{12}$	55
4.15	$11.4*10^{12}$	$2.7*10^{12}$	$1.3*10^{12}$	64
4.6	$7.6*10^{12}$	$1.7*10^{12}$	$8.6*10^{11}$	97
5.75	$5.5*10^{12}$	$9.6*10^{11}$	$6.0*10^{11}$	138
9.0	$5.9*10^{12}$	$6.6*10^{11}$	$5.9*10^{11}$	141

The corresponding localized beam loss to reach yearly BNL concentration limit for tritium is $14*10^{15}$ nucleons at 10.4 GeV, assuming 4 equally weighted loss points. This corresponds to

more than a year of operations with 100% uptime for the worst case of 3.85 GeV. If all 6 IRs have the same beta functions then one could expect that the concentrations to be distributed over three times as many locations and correspondingly a factor of three more below the concentration requirements. Low energy operations for the immediate future[4] will use the same beta function at all IRs. The losses at store have assumed that the collimators and working effectively (90%).

The beam in the ring during store could encounter an unexpected aperture. The number of allowed weeks could be expected to be lower than the values given in Table I. Another possibility is that the collimators are not effective. Assuming a worst case with the collimators not being used and each ring having one such aperture then the allowed amount of low energy operations given in Table I for such a location would be 1/20th of the values listed. In the worst case 2.5 weeks of operations would be required to reach the BNL ^{3}H concentration limit. We do not anticipate losses at store being an issue for soil activation with appropriate beam monitoring during operations.

The injection losses also need to be taken into account before one can determine the weeks of possible operations at low energy as well as other operational losses such as at full energy. The weeks of allowed operations for injection can be scaled from the number given above.

Injection Losses

Reference 3 has provided estimates for the losses at RHIC injection. However, there has been no guidance on the distribution of these losses. It will be assumed that the losses are equally divided between the injection area, the collimators, the abort kickers, and the triplets. For conservative purposes up to a 70% injection loss was assumed[5] for the collimators if they are used

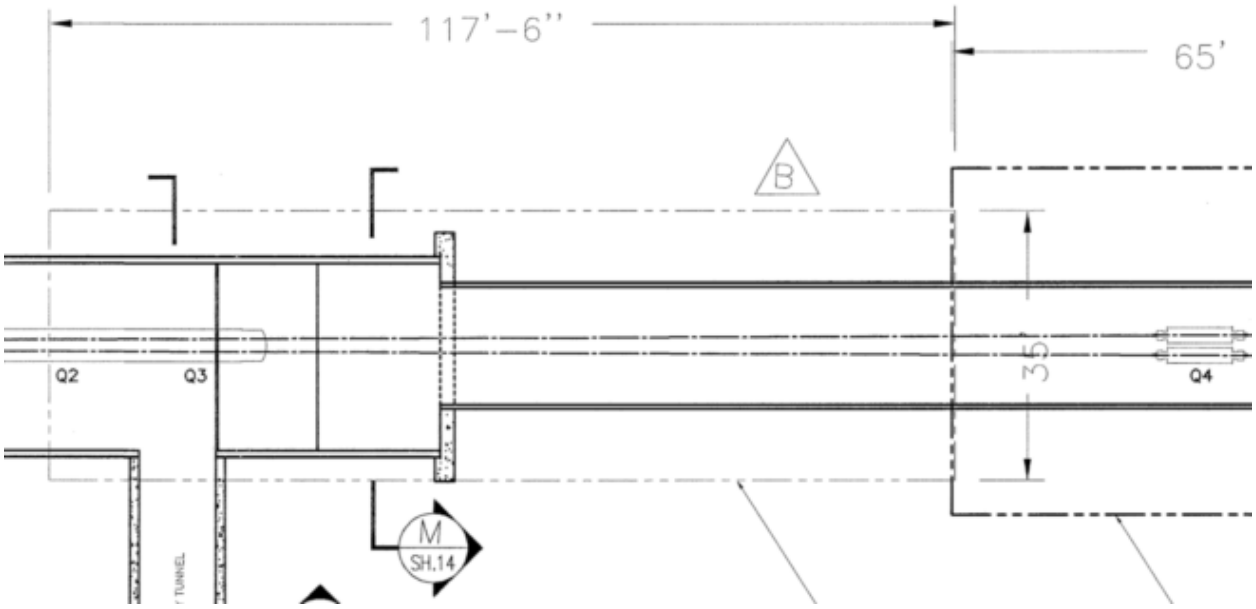

Fig. I: Plan view of the abort kicker area. The kickers are downstream of Q3 but not shown.

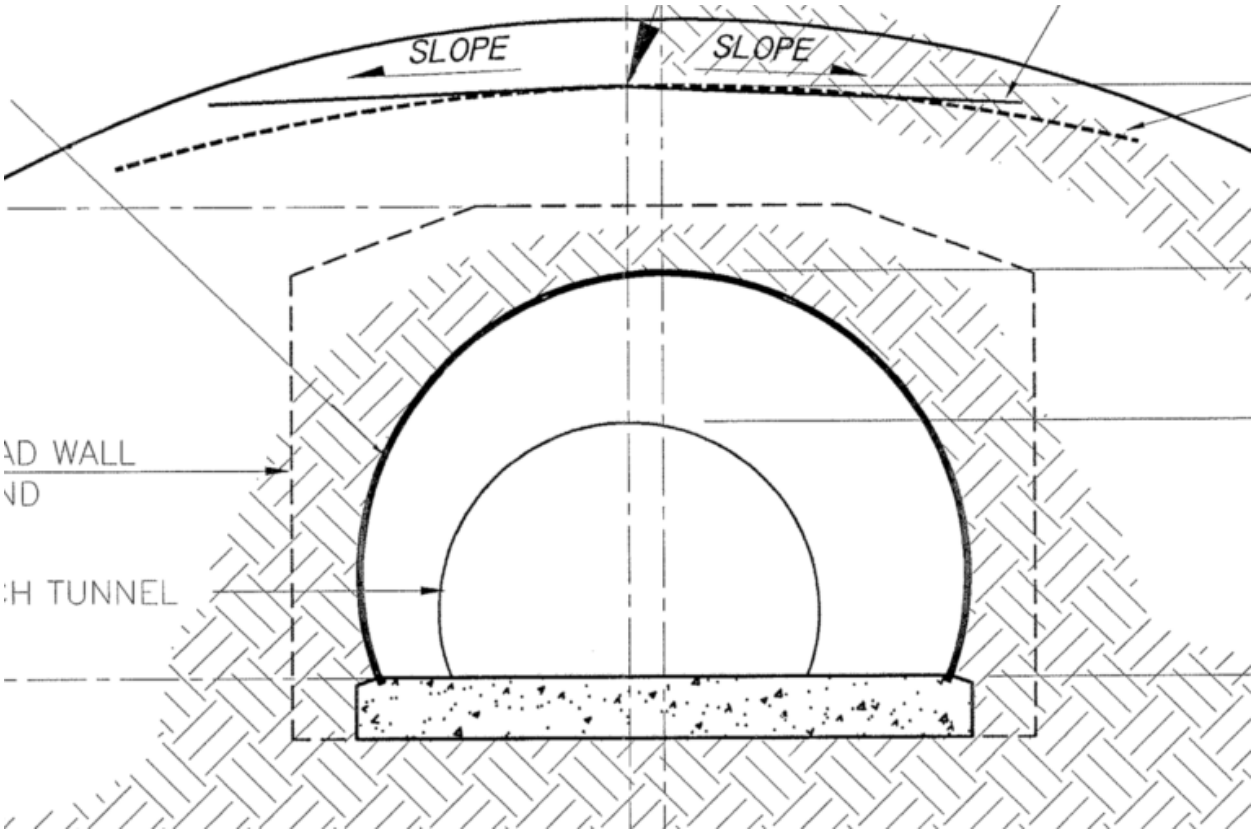

Fig. II: Cross sectional view of the kicker area. Projection of both liners are at top.

aggressively. Operational experience will provide more accurate guidance for the long term. In addition, with experience the collimators can be used to absorb most of the injection losses. However, during early operations this may not be the case and the equal partition of losses on four types of apertures will be assumed.

We will examine the injection losses at the triplets. Since the geometry and energy are the same at injection and store, the soil activation results can be obtained by scaling the store numbers above. The table below has the number of weeks of low energy operations to reach the BNL tritium limit. Since the limits are based on losses in a year the numbers over 52 weeks do not apply. However, if one uses the ^{22}Na limits then the operation time would decrease by a factor of 4.7. There are many assumptions that have gone into the estimates but with reasonable monitoring by operations the soil activation near the triplets should not be an issue.

The abort kickers may be another location for injection losses. The abort kickers are located on each side of the IR at 10 O'clock. The kickers start almost immediately downstream of Q3 in the 26 foot diameter tunnel. A plan view of the area is shown in Fig. I. The abort kickers are not shown in the layout of the area but the liners are. A cross-sectional view of the area is shown in Fig. II. The liner over the abort kickers was installed as an extension of the beam dump liner. This liner is not effective[7] for losses on the portion of the abort kickers inside the 26 foot wide tunnel wall especially for the inside of the ring.

Table II: Low Energy triplet Losses for Injection

Energy in GeV per nucleon	Ratio of injection losses to Store losses	Ratio of injection to store losses in triplets	Weeks of operations to reach SMBS ^{3}H limit
2.5	3.7	9.2	27
3.85	2.37	5.9	28
4.15	1.58	4.0	49
4.6	1.05	2.62	108
5.75	0.68	1.70	248
9.0	0.39	1.0	420

The distance from the abort kicker to the soil outside the 26 foot diameter tunnel is 14 feet. If all the losses in the kickers occur at the end closest to Q3 then the allowed time for operations is the same as in the table above. It is also possible that the kickers will have store losses but similar to the triplets this will not be an issue.

The substantial beam losses during the injection process are expected at both injection sites. The floor and ceiling effectively act as a soil cap for the soil directly under the floor. The closest soil to the loss point is then the soil over the concrete ceiling. A cross-section of the injection area is shown in Fig. III. The distance to the soil over the ceiling is 10 feet. The concrete is about 132 gm/cm^2 thick, which provides a reduction of a factor of 3 in the high energy hadrons. Two loss points in each ring were assumed for the triplets while there is only one injection loss point. It is concluded that the injection areas are permitted to have 1.5 times the operating weeks of the numbers given in the Table II.

Beam Dumps and Collimators

The potential soil activation associated with the RHIC beam dumps and collimators has been addressed for the low energy beams in references 5 and 6. The low energy losses are below the yearly levels already approved for RHIC operations.

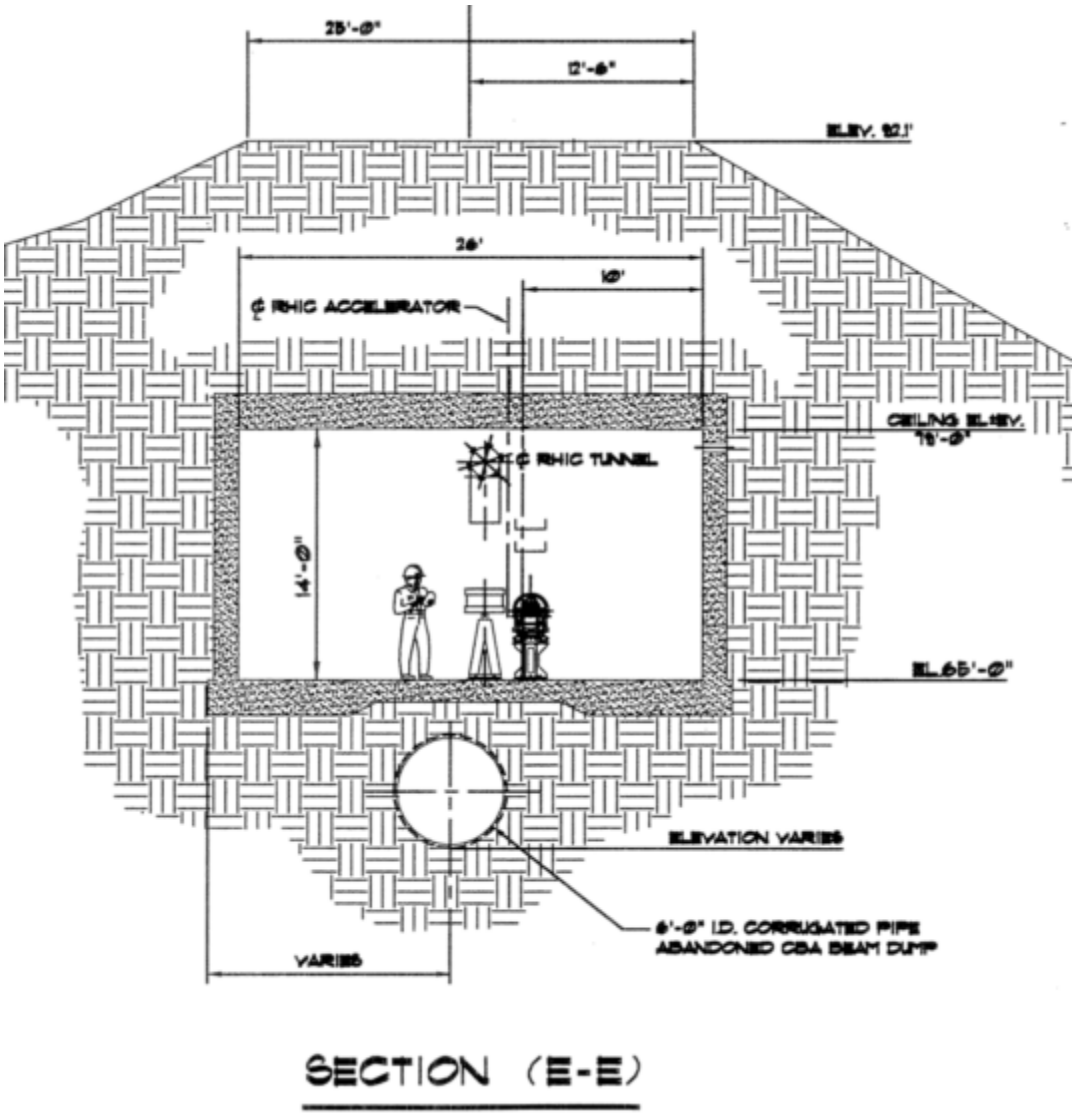

Figure III: Cross sectional view of the RHIC injection area

Comments

There is a sufficient safety of margin that multiple weeks of low energy ion operations should be able to be conducted this year without the risk of groundwater contamination by an soil activation by beam losses. The Beam Loss Monitor (BLM) system in RHIC should be sufficient to monitor the beam loss around the ring. A few recommendations are made here that will help to monitor the losses during this run and aid in any risk mitigation for future long low energy ion operations.

1) It is recommended that additional software be established (if needed) that maintains a running total the each loss monitor. **(Ck-Fy2010-RHIC-647)**
2) Additional removable soil samples be place near the triplets. It is recommended that 2 removable soil samples be placed on each side of STAR, PHENIX, and at 10 O'clock. The intent is to place them to see the losses from both the yellow and blue ring by having one downstream of Q2 and one upstream of Q3. (**CK-Fy2010-RHIC-648)**
3) The beam losses should be documented at each beam energy and provided to the RSC for consideration of possible improvements for longer low energy runs. (**CK-Fy2010-RHIC-649)**
4) A list of potential apertures that can create beam losses be given to the RSC for the RHIC rings. (**CK-Fy2010-RHIC-650)**

References

1. SBMS Subject Area on Accelerator Safety, "Design Practice for Known Beam-Loss Locations".
2. A.J. Stevens," MCNPX 2.1.5 Shielding Estimates in a Simple Tunnel Geometry".
3. T. Satogata, "RHIC Low Energy Beam Loss Projections", Sept. 9, 2005.
4. T. Satogata private communication.
5. D. Beavis, "Low Energy RHIC Operations: External Dose from Collimators", Nov. 20, 2009.
6. D. Beavis, "Low Energy RHIC Operations: External Dose from the Beam Dumps", Nov. 20, 2009.
7. This remark is not strictly true but requires detailed analysis that is not necessary for this report.

CC: T. Satogata
W. Fischer
M. Van Essendelft
A. Drees
W. Fischer
A. Pendzick