Electron Tube, Device & Equipment
TECHNICAL DATA

TOSHIBA PULSED KLYSTRON AMPLIFIER E3730A

Toshiba E3730A is an S-band high power pulsed amplifier klystron designed for linear accelerators.

The E3730A delivers 50Mw peak output power with a power gain of more than 50dB and with efficiency of 43%.

The electron beam is focused by the electromagnet VT-68922.

A dispenser cathode with high reliability promises long tube life.

GENERAL DATA

Electrical:

Cathode:	Dispenser Type	
Heater Voltage[1]	18	V
Heater Current[1]	18	A
Heater Surge Current[1]	40	A
Heater Warm-up Time	Min. 60	min.
Frequency	2856	MHz

* The information contained herein is presented only as a guide for the applications of our products. No responsibility is assumed by TOSHIBA for any infringements of patents or other rights of the third parties which may result from its use. No license is granted by implication or otherwise under any patent or patent rights of TOSHIBA or others.

* The information contained herein may be changed without prior notice. It is therefore advisable to contact TOSHIBA before proceeding with the design of equipment incorporating this product.

Mechanical:

Dimensions: . . . . . See Outline Drawing

Ion Pump[2][3][4] . . . . . 8 l/min.

Focusing Electromagnet[5][6] . . . . . Toshiba Electromagnet VT-68922

Mounting Position . . . . . Vertical,Cathode down

Net Weight . . . . . Approx. 140 kg

X-ray Shields . . . . . Required[7]

RF Connection:

Input . . . . . Coaxial, Type"N"

Output . . . . . WR284[8][9],SLAC Type Flange "Female"

Cooling:

Cathode: . . . . . Oil

Body and Collector: . . . . . Water[10][11]

Flow Rate . . . . . Min. 30 l/min.

Pressure Drop . . . . . Approx.0.29 MPa (3 kgf/cm^2)

Water Pressure . . . . . Max. 0.98 MPa (10 kgf/cm^2)

Water Inlet Temperature . . . . . Max. 35 ℃

Water Connector . . . . . PT 1/2" Female

ABSOLUTE RATINGS[12][13]

	Min.	Max.	Units
Heater Voltage[1][14]	---	20	V
Heater Current[1][14]	---	20	A
Heater Surge Current[1]	---	40	A
Heater Warm-up Time	60	---	min.
Peak Beam Voltage[15][16]	---	325	kv
Peak Beam Inverse Voltage[17]	-100	---	kv

	Min.	Max.	Units
Peak Beam Current[18][19]	-55	400	a
Peak Drive Power[20]	---	1000	w
Peak Output Power	---	52	Mw
Average Output Power	---	10.5	kW
Collector Dissipation	---	35	kW
Pulse Width(Beam Voltage)[21]	---	6.5	μs
Pulse Width(Output Power)[22]	---	4	μs
Pulse Repetition Rate	---	50	pps
Load VSWR[23]	---	1.4:1	
Coolant Flow[11]	30	---	l/min.
Waveguide Pressure[9]	---	6.7×10^{-5}	Pa
		(5×10^{-7}	Torr)

TYPICAL OPERATION

		Units
Frequency	2856	MHz
Peak Beam Voltage	312	kv
Peak Beam Current	362	a
Peak Output Power	51	Mw
Efficiency	45	%
Drive Power	365	w
Gain	51	dB
Pulse Width(Beam)	6.2	μs
Pulse Width(rf)	4.0	μs
Pulse Repetition Rate	50	pps

ACCESSORIES (necessary, but not delivered with the tube)

Focusing Electromagnet	Toshiba VT-68922
Ion Pump Power Supply	Toshiba VT-69009-3 (3.5KV)
Ion Pump Magnet	Toshiba VT-69062
X-ray Shield kit	Toshiba VT-69063
	Toshiba VT-69064
Lifting Attachment	Toshiba VT-69065

Notes:

Note (1): When the heater power is applied to a cold tube , the heater voltage shall be adjusted from zero to prescribed value so that the heater current should not exceed 40A. This value of heater voltage shall be maintained for at least 60 minutes prior to the application of beam voltage. The liquid coolant flow must be operating whenever the heater power is applied.

Note (2): An ion pump shall be an integral part of each tube. This ion pump shall operate at +3300 Vdc ±300 Vdc from a high impedance power supply capable of delivering 10 mA. For normal tube operation, the ion pump current shall be less than 4μ Adc. Because of the size of this tube, it is not abnormal to observe changes in the internal vacuum during storage. To be able to put the stored klystron into operation quickly, the klystron ion pump be operated all the time.

Note (3): Interlock should be provided to prevent application of beam voltage, unless the ion pump current is less than the normal operating value.

Note (4). To operate the ion pump, a specific magnet is required. Unless specified in contract, the magnet for the ion pump will not be provided with the klystron.

Note (5): The focusing solenoid must be cooled with water.

Note (6): Interlocks should be provided to prevent application of beam voltage unless solenoid coil current are within ± 5% of the specified value. Interlocks in the liquid cooling system should prevent the application of solenoid voltage, unless the liquid coolant flow is at, or above the specified minimum flow rate.

Note (7): Unless specified in contract, X-ray shields will not be provided with the klystron. X-ray radiation can be reduced down to 20 μSv/h measured at 0.3 meter from tube surface, when the klystron is operated with the specific focusing electromagnet VT-68922 and X-ray shield kit. The value does not mean the X-ray intensity which is definitely harmless to human body, and does not give any guarantee of X-ray intensity radiated from equipment using the klystron. Read OPERATING HAZARDS in this technical data.

Note (8). The output waveguides shall be operated in vacuum.

Note (9): Interlocks should be provided to prevent application of rf drive power, unless the pressure in the output waveguide is less than 6.7×10^{-5}Pa (5×10^{-7}Torr).

Note (10): By de-ionized low conductivity water. The maximum inlet water pressure shall not exceed 0.98MPa (10 kgf/cm^2).

Note (11): Interlocks in the liquid cooling system should prevent the application of heater voltage and beam voltage, unless the liquid coolant flow is at, or above the specified minimum flow rate.

Note (12): Referring to paragraph 6.5 of MIL-E-1G, those value are based on the "absolute system" and should not be exceeded under continuous or transient conditions. A single rating may be the limitation and simultaneous operation at another rating may not be possible. Design values for systems should include a safety factor to maintain operation within ratings under voltage and environmental variation.

Note (13): All voltages except heater voltage and ion pump voltage are referenced to the cathode. The ion pump voltage is referenced to the tube body. The tube body must be firmly connected to the ground.

Note (14): Interlocks should be provided to prevent application of a beam voltage unless the heater voltage and the heater current are within ±5% of prescribed value, and have been applied for the period of time specified in Note (1).

Note (15): The electron gun insulator shall be immersed an insulating oil.

Note (16): Interlocks should be provided to prevent application of beam voltage greater than 5% above normal operating value, as well as preventing exceeding the Absolute Ratings.

Note (17): Interlock should be provided to prevent application of beam voltage, unless inverse beam voltage is less than the Absolute Ratings value.

Note (18): Interlocks should be provided to prevent the cathode(beam) current from exceeding values greater than 10% above normal operating values, as well as preventing exceeding the Absolute Ratings.

Note (19): Interlocks should be provided to prevent the application of beam voltage, unless inverse cathode(beam) current is less than the specified value.

Note (20): Drive power is defined as the power incident to the klystron.

Note (21): The beam pulse width (duration) shall be measured between the 75% point of the beam voltage pulse.

Note (22): The rf pulse width shall be measured between the 3 dB point of the rf output pulse.

Note (23): Output power is measured under a load VSWR 1.2:1.0 maximum.

OPERATING HAZARDS

Read the following instructions and take all necessary precautions to prevent personal from hazards. Safe operating conditions are the responsibility of the equipment designers and the users of such tubes .

(1) High Voltage

This tube operates at voltage that can be deadly .

Equipment must be designed so that personnel cannot come in contact with operating voltages. Enclose high-voltage circuits and terminals and provide fail-safe interlocking switch circuits to open the primary circuits of the power supply and to discharge high-voltage condensers whenever access into the enclosure is required .

(2) X-ray Radiation

Klystrons operating at high voltage may emit X-ray radiation which is harmful to human body. Never operate the klystron without adequate X-ray shields in place. It is equipment manufacturer's responsibility to check the X-ray radiation intensity and to furnish any additional protection necessary to meet all required safety standards when the tube is operated in the equipment. X-ray shields must be provided not only for the klystron but also for pulse transformer tank and klystron modulator. Check the X-ray intensity by regular period and when any charge related to X-ray radiation was made.

(3)Microwave Radiation

Exposure of the human body to microwave radiation in excess of 1mW per square centimeter is unsafe and can result in blindness or other injury. Personnel must be fully protected from the microwave energy which radiates from this device. All input and output rf connections , waveguide flanges , and gaskets must be rf leakproof and properly engaged. Never operate this device without a microwave-energy-absorbing load while this device is energized .

Equipment must be designed to protect all the personnels from the hazards. The labels and caution notices must be provided on the equipment and in the manuals warning clearly of these hazards .

OUTLINE DRAWING

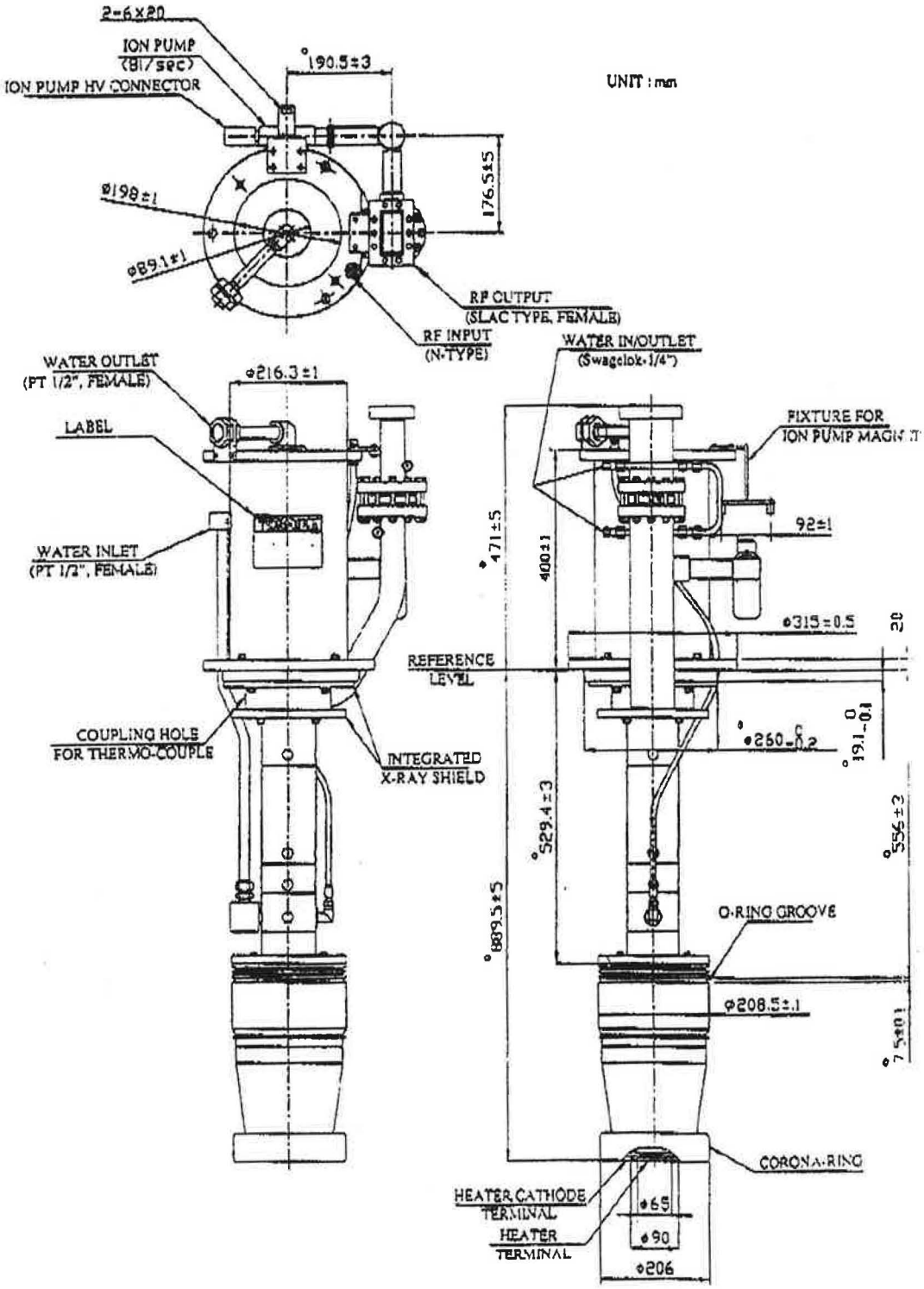
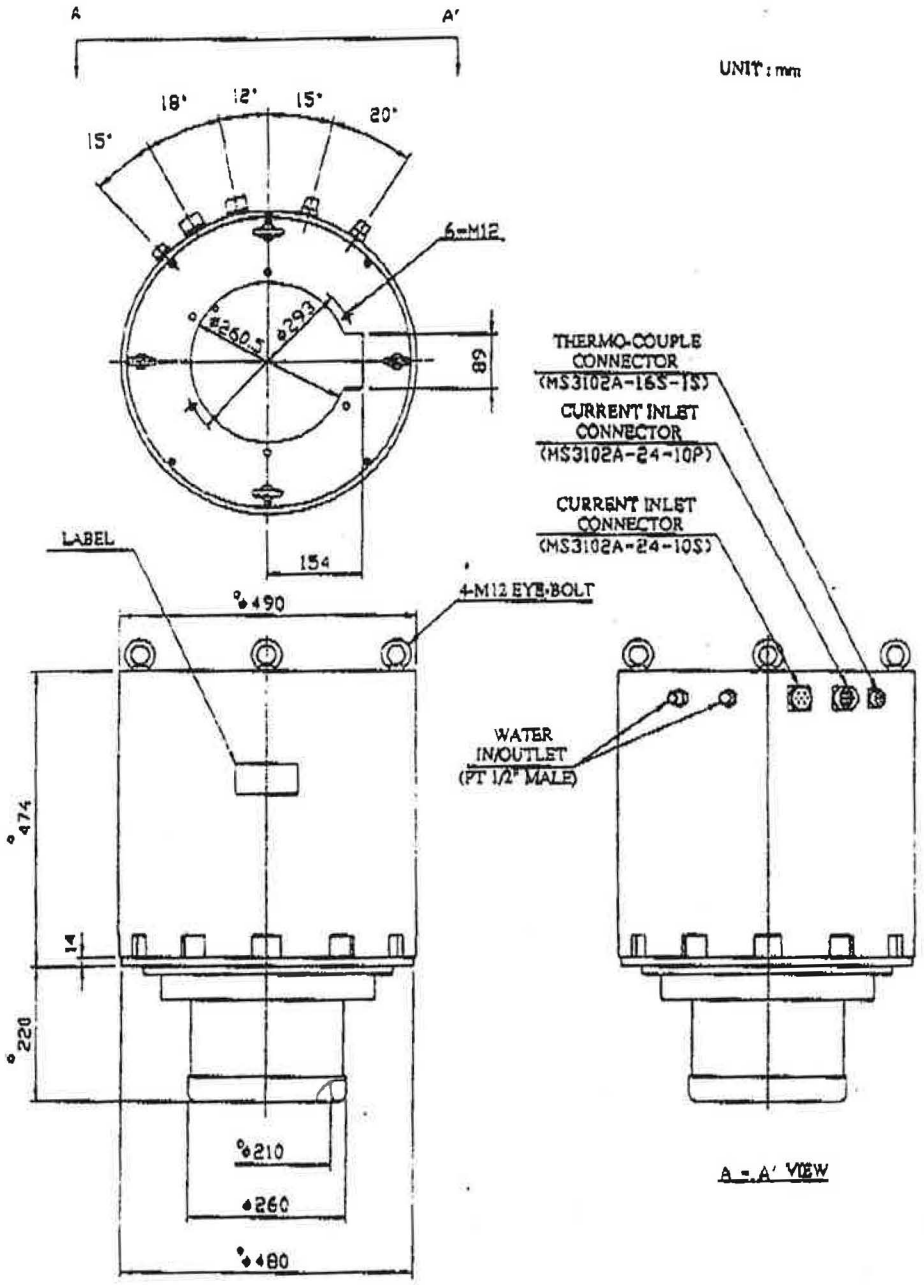
VT-68922 OUTLINE DRAWING