Cold test of DQWCC in SVTF

Silvia Verdu-Andres and Qiong Wu
May 2, 2013 (updated in May 29, 2013)

Cavity setup and operation description for radiation safety concerns

The cold test of the Double Quarter-Wave Crab Cavity (DQWCC) will be conducted at the Small Vertical Test Facility (SVTF, was called little block house) in building 912.

Cavity layout

The Double Quarter Wave Crab Cavity is a superconducting RF cavity operating at 400 MHz and made of niobium. Figure 1 shows the DQWCC.

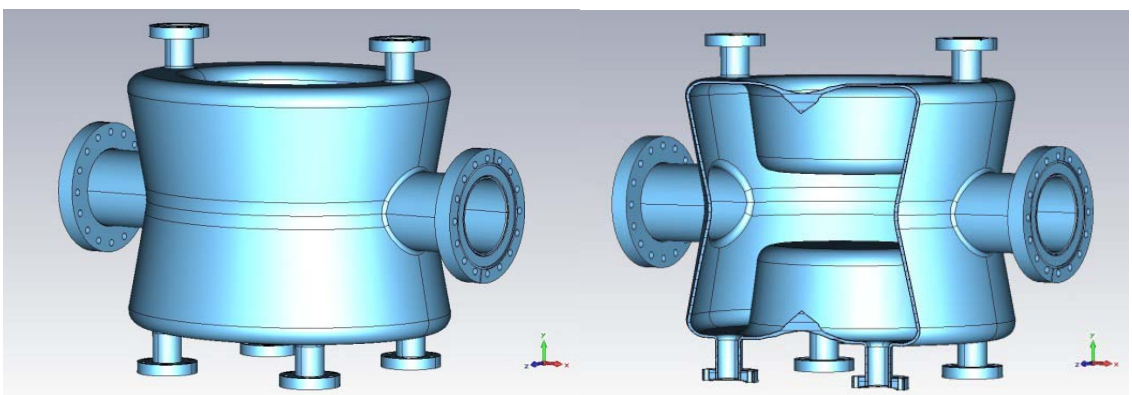

Figure 1. 3D model of the Double-Quarter Wave Crab Cavity: (left) full body; (right) cavity interior.

Cavity positioning in the cryostat

The test cavity will be placed in a small dewar. Figure 2 shows different views of the cavity inside the dewar.

Cavity operation

The power will be supplied by a 5083 RF amplifier which delivers a maximum power of 200 W.

The main operation goal for this cold test is to achieve, at least, a deflecting voltage of 3 MV in the cavity. The Double Ridge Crab Cavity, designed by Old Dominium University (ODU) and Stanford Linear Accelerator (SLAC), was recently cold test in JLab and reached a maximum deflecting voltage of about 7 MV. Therefore, it would be nice to measure the performances of the DQWCC for a deflecting voltage up to 6 MV or even higher.

The field level in the gap at 3.3 MV deflection voltage is 26 MV/m in the middle of the center plate. Figure 3 shows the electric field distribution inside the cavity. The maximum electron energy would come from the parallel plates.

The separation between the two plates is 84mm, as the beam pipe diameter. The transit time factor should be around 1 due to the small gap. So the maximum electron energy would be 26 MV/m x 0.084m =2.19 MeV.

As 4 MeV is the limit to the maximum electron energy, it means that we can go up to 6MV deflecting voltage.

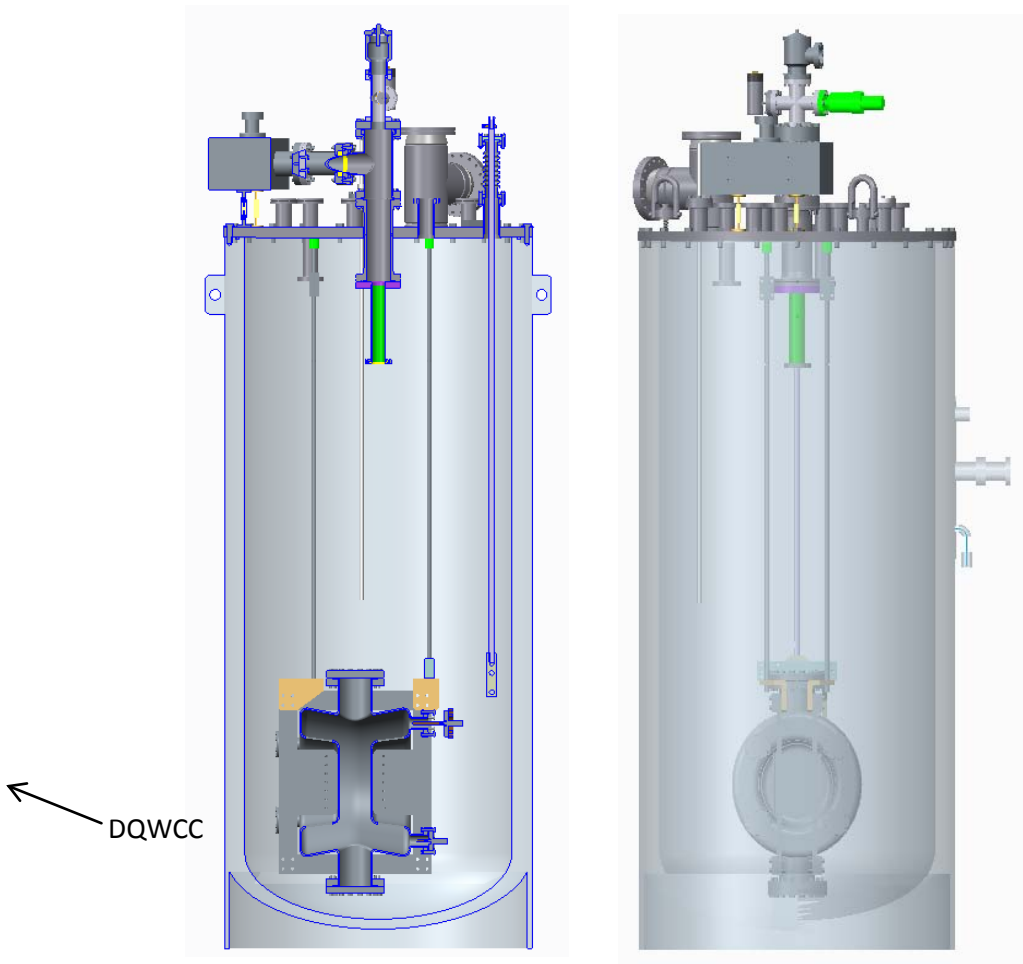

Figure 2. DQWCC inside the cryostat dewar: (left) frontal view of test cavity inside dewar; (center) section of frontal view of test cavity inside dewar; (right) lateral view of test cavity inside dewar.

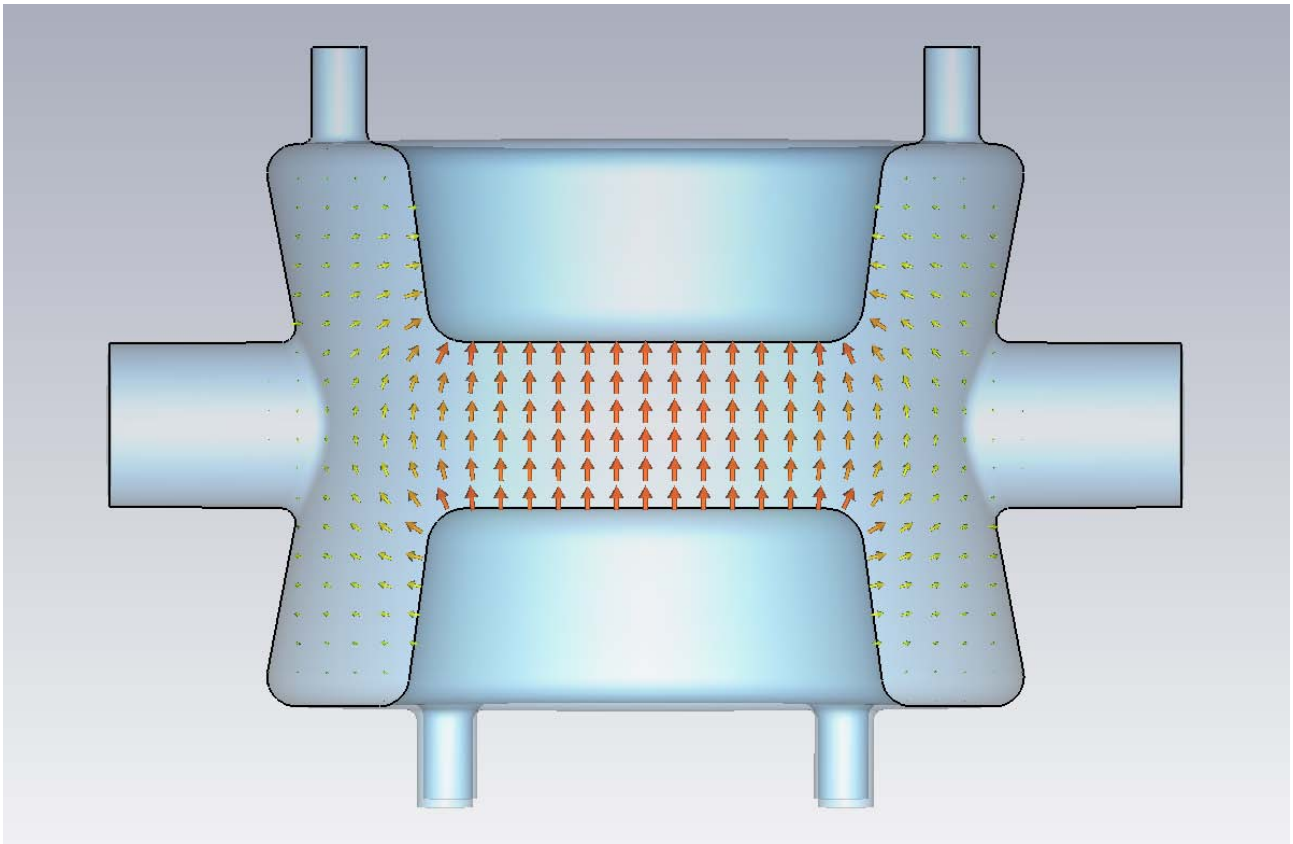

Figure 3. Electric field distribution in the test cavity.

Cavity orientation inside the SVTF

Figure 4 shows the orientation of the cavity inside the dewar with respect to the SVTF blockhouse. The yellow arrows give the direction in which electrons could be accelerated in the cavity.

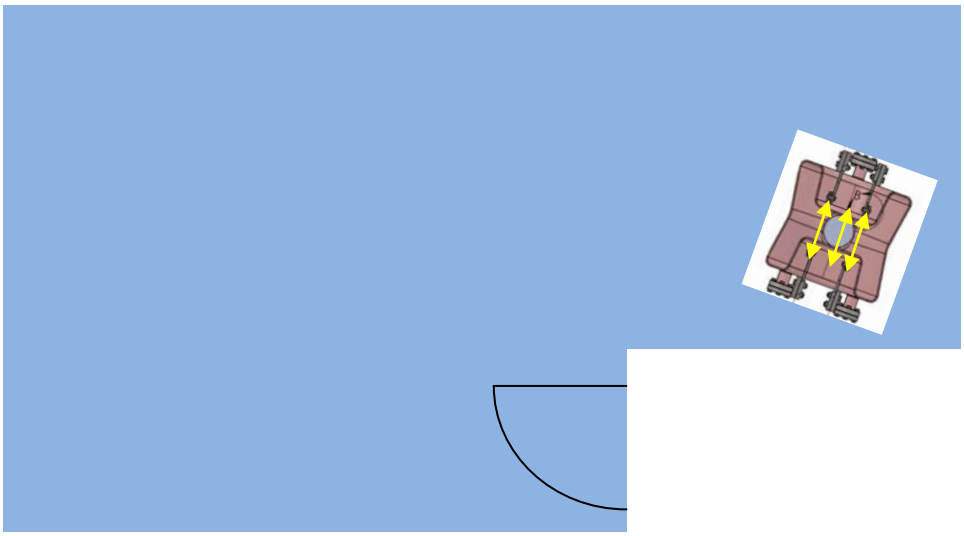

Figure 4. Footprint of the SVTF in blue. Orientation of the crab cavity with respect to the SVTF blockhouse. Direction in which electrons will be mainly accelerated is given by yellow arrows.