Collider-Accelerator Department

BROOKHAVEN NATIONAL LABORATORY

Building 911B – P.O. Box 5000
Upton, NY 11973-5000
Phone 631 344 7124
Fax 631 344 5568
beavis@bnl.gov
www.bnl.gov

managed by Brookhaven Science Associates
for the U.S. Department of Energy

Memo

date: *January 12, 2012*

to: *RSC*

from: *D. Beavis*

subject: *G5 Beam Dump Simulation*

A first test of ERL with beam is expected to occur in CY2012. The test entails operating the electron gun and accelerating the electrons to 20 MeV with the five-cell cavities. The beam will then be transported to one of two beam dumps that have been placed specifically for the testing. Calculations were mistakenly conducted at 3.5 MeV, the maximum gun energy. The results for 3.5 MeV show that the transport of the beam to the dumps without acceleration by the five-cell cavity is acceptable for radiation protection should the project desire to do so The results at 25 MeV also show that the setup is acceptable for radiation protection. This report documents the anticipated dose rates outside the shielding due to the beam transport to the temporary beam dumps.

A simple simulation of the G5 beam dump has been made to provide estimates of the potential dose outside the shielding. MCNPX[1] was used to generate the x-rays from the 3.5 MeV and 25 MeV electron beam striking the steel beam dump. The G5 tests will be conducted with two identical beam dumps in different location. The first dump is located in the straight area with the first dipole after the five-dell cavity turned off. The second beam dump is located downstream of the first dipole with the deflection being 30 degrees rather than 60 degrees that would occur for the final ERL operation. A single generic beam dump position was simulated. The results can be scaled to provide estimates of the radiation escaping out the front wall or the side wall.

It will be concluded that the proposed location of the G5 beam dumps is acceptable for 3.5 and 25 MeV beam operations. The G5 tests are not expected to produce dose to personnel outside the shielding at the modest beam power level that the tests will be conducted.

Geometry of Simulation

The beam dump was simulated as a cylinder of iron 15 inches long and 6 inches in radius. A cylindrical hole in the middle was 1.25 inches in radius and 8.5 inches long. The actual dump is shown in Fig. 1. The z-coordinates of the simulation is the axis of the beam dump. z=0 is the location where the beam strikes the beam dump. The shielding was approximated by 120 cm of light concrete. In the forward direction the shielding starts at z=2 meters. In the transverse

direction the shield wall was at a radius of 3 meters and was approximated as a cylinder. The photon fluence was tallied on the walls and for every 30 cm of penetration. The statistics for 3.5 MeV did not provide for reliable[2] results beyond 60 cm of penetration. TVLs from NCRP have been used to extrapolate the numbers through the shield.

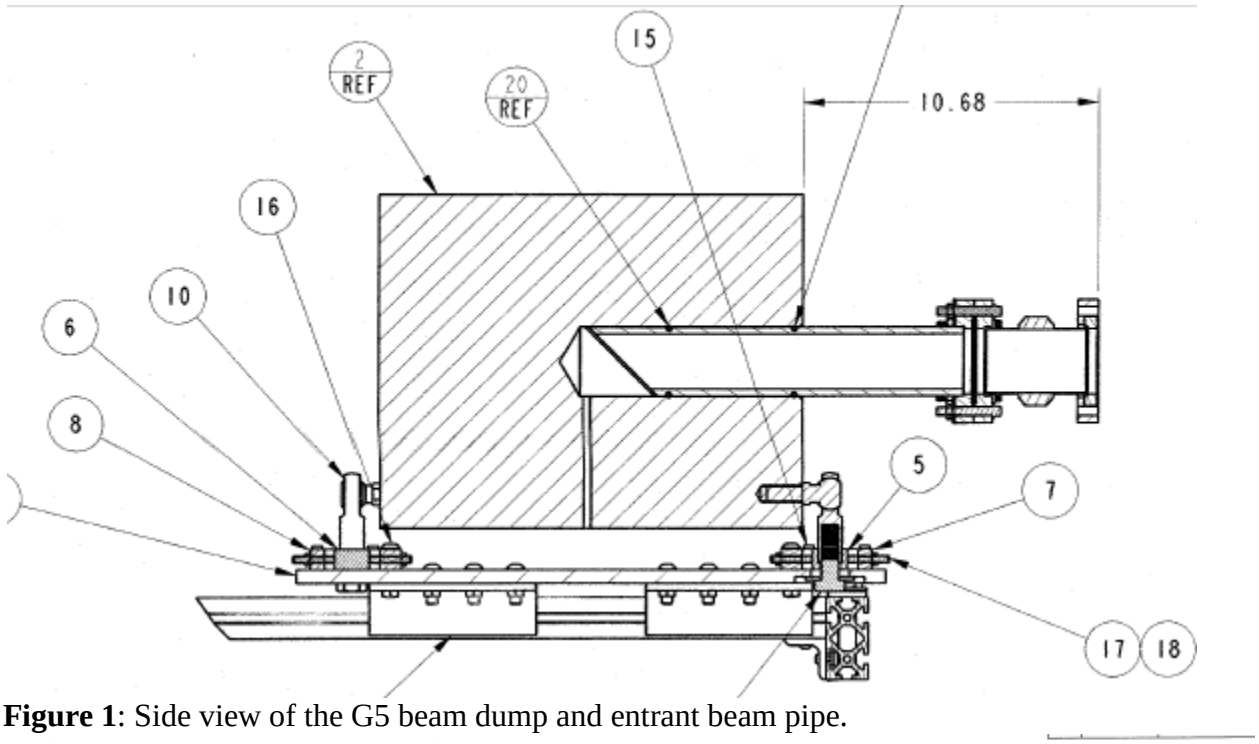

Figure 1: Side view of the G5 beam dump and entrant beam pipe.

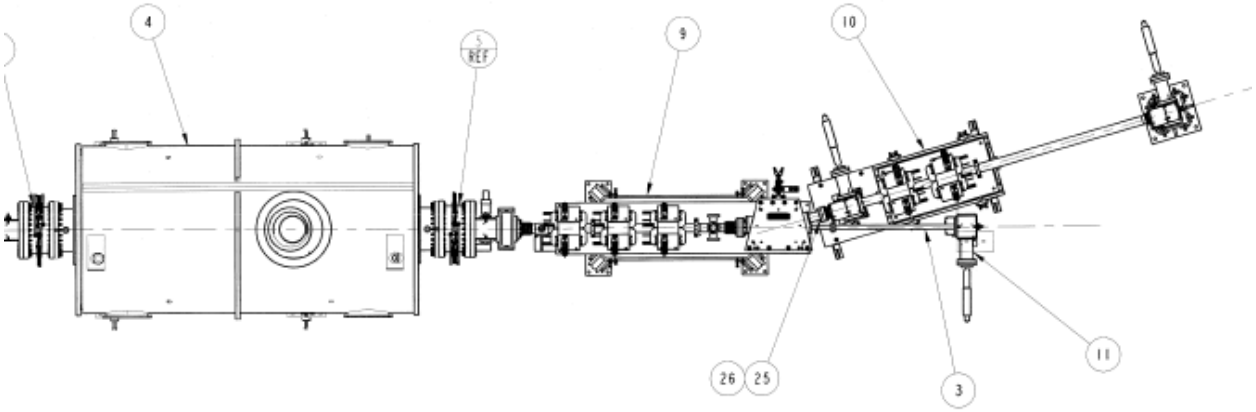

Figure 2: The G5 dump at 30 degrees is shown. The other dump is not shown but is in the straight ahead position closer to the bending magnet.

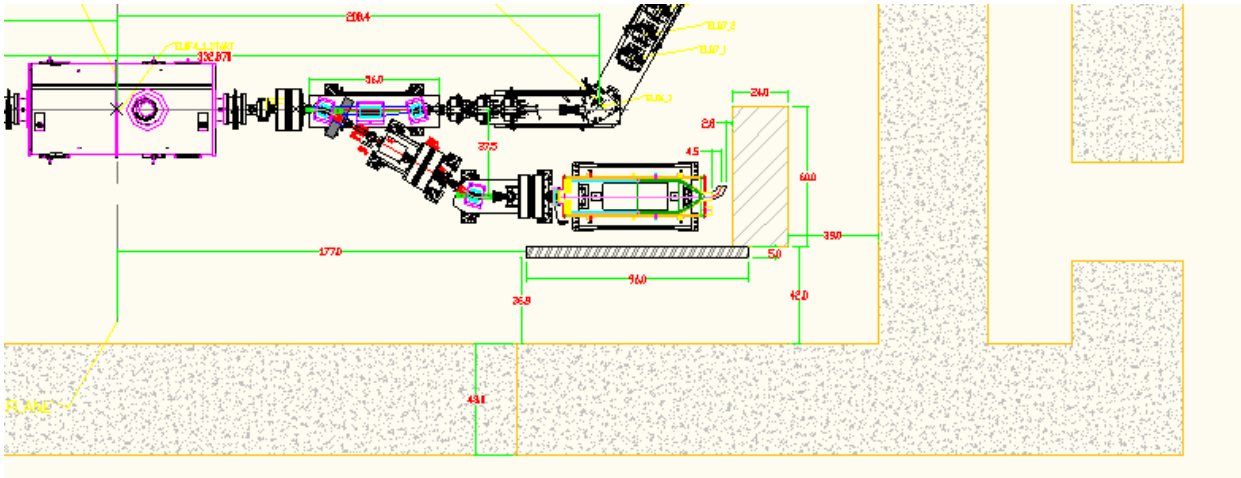

Figure 3: The plan view of the preliminary layout for the final dump. The forward and side wall shielding is shown including the entrance port. The final shielding for the beam dump is not shown, but the forward block of iron is expected to be used.

Fig. 2 shows the five cell cavity to the G5 30 degree beam dump. Figure 3 shows the preliminary layout of the final beam dump and the forward and side wall shielding.

Simulation Results

Fluence-to-dose conversion factors have been used in energy bins to convert the photon fluence to mrads. Fig. 2 displays the dose in rads/electron for different radial bins on the forward shield wall. The points are plotted at the center of the bin. Smaller bins sizes are used at smaller radius so that the central peak is not averaged over too large a variation.

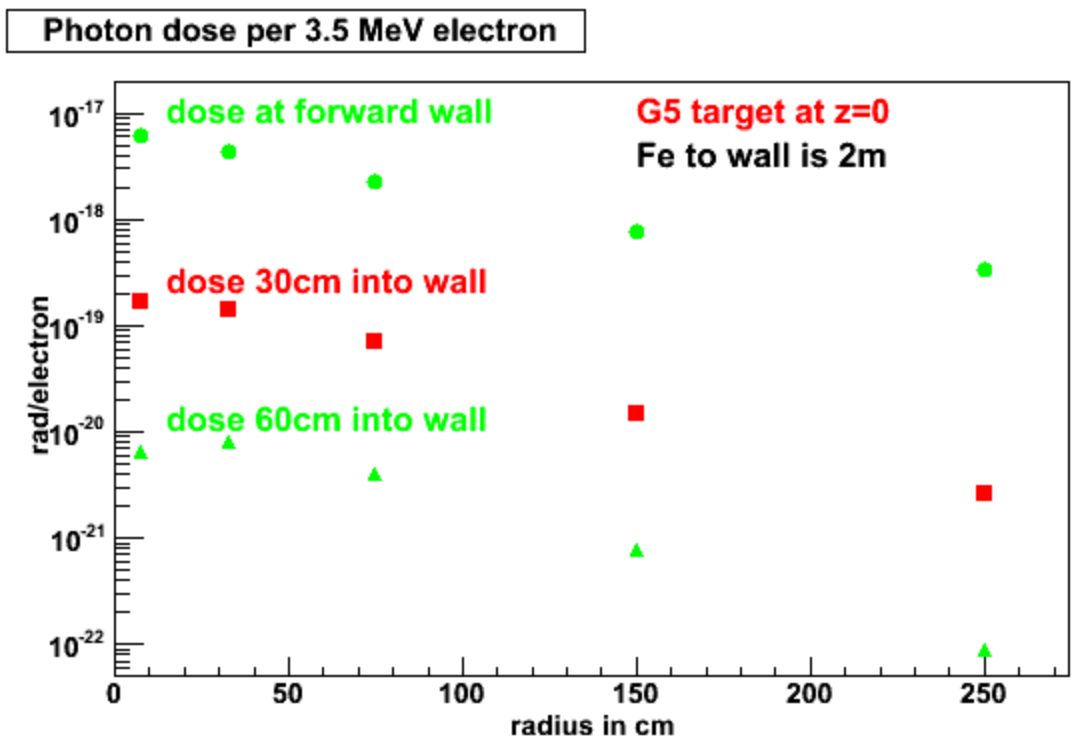

Figure 4: ERL forward shield wall dose 2 meter from G5 dump.

The side-wall shielding results are presented in Fig. 3. The results are presented for fixed radius and longitudinal bins of 1 meter.

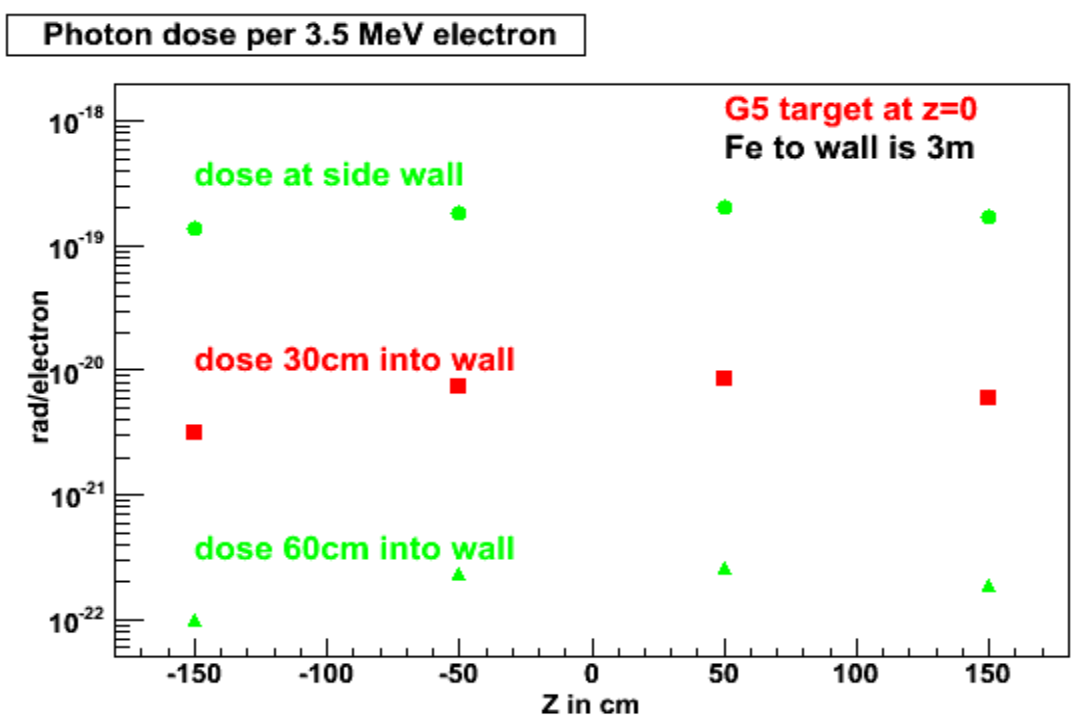

Figure 5: ERL side wall dose per electron at 3 meter from G5 dump.

The same MCNPX file was modified to conduct the calculations for 25 MeV electrons. Fig. 6 shows the results for the forward shielding wall for 25 MeV. The peak at small radii is more pronounced and the forward radiation levels are clearly higher. There are sufficient statistics to evaluate the dose penetrating the 4 feet thick light-concrete wall. The results for the side wall are shown in Fig. 7

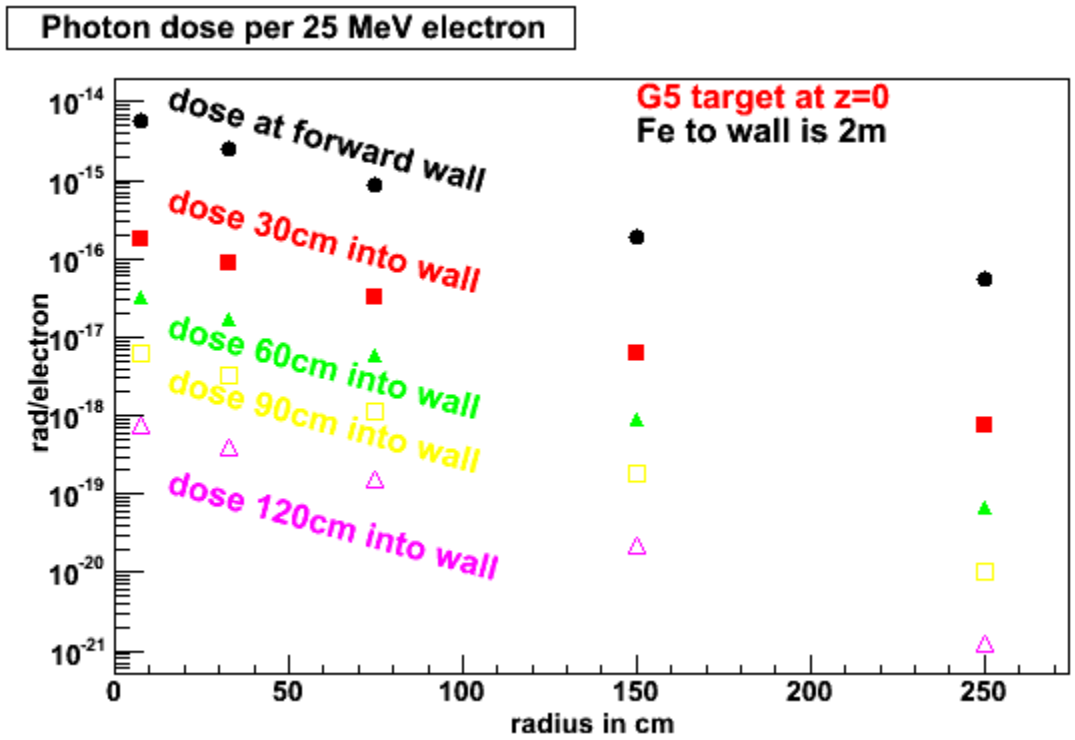

Figure 6: 25 MeV electrons on the G5 dump 2 meters in front of light concrete shield wall.

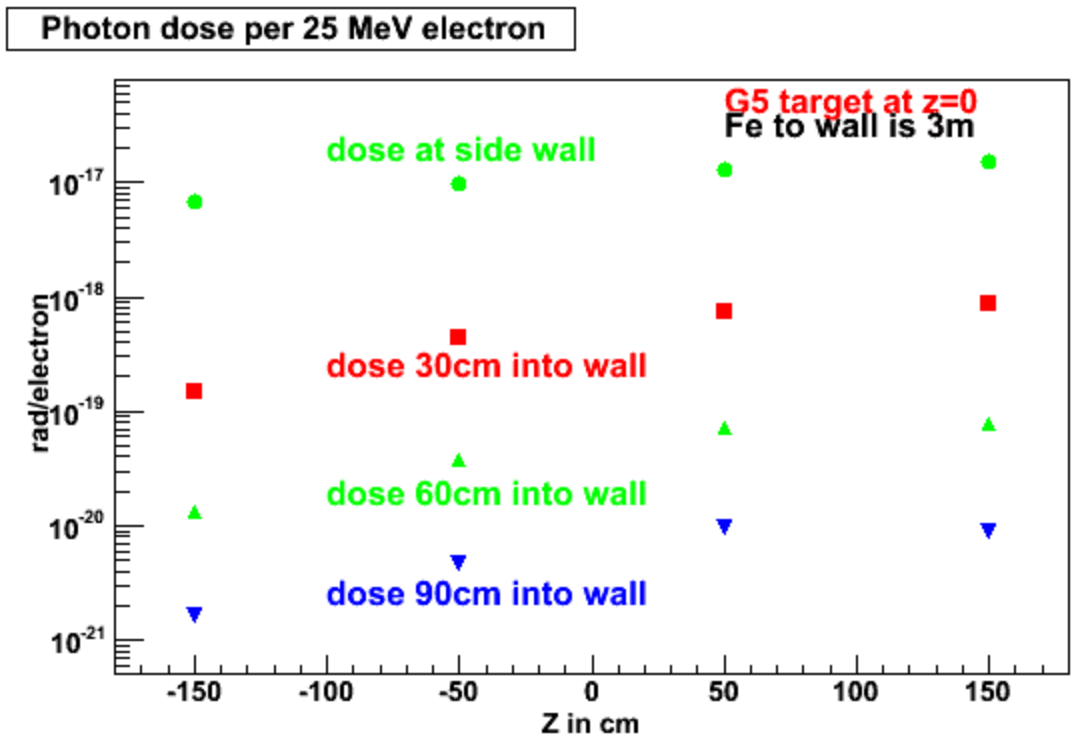

Figure 7: 25 MeV electrons into G5 beam dump 3 meters from light concrete side wall shielding.

Dose Rate Estimates for G5 Test

The 3.5 MeV results for 30 cm of penetration will be extrapolated through the remaining 3 feet of light concrete using TLVs. The TVL[3] for 3.5 MeV x-rays can be obtained from Fig. E.12 and is 10 inches of light concrete. This provides an attenuation of $2.5*10^{-4}$ for the concrete. Additional reduction due to the $1/r^2$ scaling can also be taken into account. For the side wall shielding the estimate is 8.6 mrem/hr for 1 MW of beam on the dump. The peak dose rate through the forward wall is estimated to be 140 mrem/hr for 1 MW of beam. The area immediately outside the four-foot concrete wall is the isle way of the north entrance labyrinth for the ERL blockhouse. This area is inside the interlocked gate[4] of the north entrance labyrinth (see Fig.4). The radiation must penetrate a second shield wall that is four feet thick. The expected dose outside that shield wall would be less than 0.1 mrem/hr.

The entrance door is not aligned with the axis of the beam dump for the G5 test.

The radiation that penetrates the side wall shielding irradiates the Klystron power supply area. Access is not allowed with beam on. This area is locked as part of the Kirk key system for beam operation. The area east of the power supply building is an additional 21 feet away. The expected dose rate for 1 MW of beam would be 0.7 mrem/hr. Any operations with 3.5 MeV beam into the G5 beam dumps would be at power levels expected to be between 1-1000 Watts. No consequences outside the shielding are anticipated. The chipmunks inside the north labyrinth are not expected to have an issue with the scattered radiation levels.

The maximum energy for ERL is 25 MeV. The G5 testing is expected to occur at about 20 MeV. The maximum beam power at 25 MeV is limited by the five-cell cavity power supply and is 50 kW. The actual tests are expected to be operated at a few Watts. The results shown in Figure 6 can be scaled with TVLs[5] to estimate the dose rate outside the second concrete wall. The dose rate is 26 mrem/hr at 50 kW. The gate is about 3 meters off axis for the test with the bending magnet on. The chipmunk at the gate would have a dose of less than 50 mrem/hr at 50 kW. The chipmunk at the end of the labyrinth would have a dose rate of about 20 mrem/hr.

The dose rate in the isle way east of the block house is estimated from Fig. 7 and found to be 2.9 mrem/hr at 50 kW. This area will clearly be compliant if the forward area is compliant. A simple limit of 500W of beam power at 25 MeV would keep the radiation levels below 0.3 mrem/hr. A simple operating limit and procedure should be acceptable to maintain the dose rates outside the ERL blockhouse below acceptable levels.

The Chipmunks in the north access labyrinth are not expected to interfere with the low power testing. No additional controls are needed limit the beam power for personnel protection. Operational controls are expected to limit the power on the beam dumps to protect them from thermal damage from the beam. Initial surveys can correlate the dose rate from the dumps, the beam current , and the response of the chipmunks. The results should be reviewed to ensure that the levels are within expectations. **(CK-FY2012-ERL-795)**

The 25 MeV beam can create neutrons. A simple estimate is made for 50kW of 25 MeV electrons striking iron. The yield of neutrons[6] is expected be $1.5*10^{13}$ n/s. The yield is nearly isotropic. A 4 meter distance will be assume for the distance to outside the shielding. The dose reduction[7] for 286 gm/cm^2 of light concrete is 10^{-5}. Therefore the estimate through four feet of light concrete is 8 mrem/hr for 50 kW of 25 MeV electrons. The dose rate in the isle way east of the beam dumps after the power supply house is less than the estimated photon dose.

There are two G5 beam dumps that are planned for the tests. Both locations are at least as far from the forward and side walls used in the simulation.

The radiation surveys conducted by RCD and the operational procedures should be sufficient to protect personnel. The number of total hours for which these tests will be conducted will be limited so long term exposure is not considered here.

References

1. MCNPX version 2.7c was used for the calculations.
2. Some of the results at a depth of 60 cm should be considered marginal. This is reason the TVL are used to extrapolate the results from a penetration depth of 30cm rather than 60cm.
3. Radiation Protection design Guidelines for 0.1-100 MeV Particle Accelerator Facilities, NCRP Report 51, National Council on Radiation protection and Measurements, 1977.
4. The gate is not shown in Figure 4.

5. The TVL for concrete at 25 MeV is 105 gm/cm^2, see reference 3.
6. NCRP Report no. 144. See Figure 3.12
7. See figure 4.5 of reference 6 for 2.1 MeV neutrons.

CC:

RSC ERL file
D. Phillips
G. McIntyre
S. Belomestnykh
I. Ben-Zvi
D. Kayran