Collider-Accelerator Department

BROOKHAVEN NATIONAL LABORATORY

Building 911B – P.O. Box 5000
Upton, NY 11973-5000
Phone 631 344 7124
Fax 631 344 5568
beavis@bnl.gov
www.bnl.gov

managed by Brookhaven Science Associates
for the U.S. Department of Energy

Memo

Updated: *July 22, 2015*
Original Date: *July 17, 2015*

To: *RSC, C. Folz, K. Kusche, J. Skaritka, Junjie Li, RSC Memo file (ATFII)*

From: *D. Beavis*

Subject: *Radiation Issues for the UED*

Update: Typos and the third column of Table III was in error.

The UED experiment will become part of the ATFII facility. The requirements for shielding, barriers, and interlocks must be established for this small portion of the ATFII complex. The discussion given in this report is based on preliminary design drawings and source details. It is expected that changes will occur between the initial design and the final installation. The UED is an electron accelerator but an exemption from the accelerator order will be requested based on the small size of the machine and low radiation levels.

X-ray Generation from the UED

The potential rate of x-ray generation from the electron beam used in operations of the UED are based several on e-mails between D. Beavis and J. Li[1]. Operating conditions are given in Table 1 below:

Table 1: Operating Parameters for the UED

Condition	Beam Energy (MeV)	Pulse Charge (pC)	Repetition Rate (Hz)	Beam Power (Watts)	Comments
Routine	2.8	0.1	5	$1.4*10^{-6}$	A
Max. Intended	3.0	1	10	$3.0*10^{-5}$	B
Power Supply Max.	5.0	1	10	$5.0*10^{-5}$	C
Dark Current	Less than 3.0	NA	NA	$3.0*10^{-3}$	D

Comments

A) The routine levels would usually establish the nominal protection scheme. However, the dark current generates more radiation than the laser induced pulsed beam and is used to establish the shielding requirements.

[1] E-mail from Junjie Li to D. Beavis, August 12, 2014

B) The maximum intended energy is established by limits internal to the power supply. It is not known at this time how that limit is established. There is a 3.4 MV limitation caused by the electrical system in the SDL installation, but this may not exist in the new installation of the UED Klystron in building 912. The Laser has a limitation of 47 Hz based on the charging system for pulse forming network[2].

C) The maximum voltage of the power supply is 5.0 MV. It is not known if the machine can actually produce beam energy of 5 MeV and at what power. The potential fault level will be discussed below.

D) There have been no established details on the actual dark current related to operations of the UED. The dark current is believed to be 10-100 times the beam current driven by the laser. The dark current is used to estimate the shielding and should produce less x-rays than the .003 W of 3 MeV electrons[3] used in the analysis.

The dose rates associated with the beam current can be estimated using numerous sources[4]. For this initial design Figure 3.5 of Footnote 4 is used to estimate the forward and transverse radiation. The dose rates[5] at 0 degrees and 90 degrees are 90 mrads/hr at one meter and 20 mrads per hour at one meter. No credit has been given for potential self-shielding. These dose rates would typically require[6] that the gate to the area be locked since a whole body dose of greater than 100 mrads/hr is possible at distances closer than a meter.

UED Area

The ATFII facility is being designed for low dose rates outside the shielding enclosures. It has been requested that the dose rates be kept below 0.05 mrem/hr so that the adjacent areas may be posted to require minimal training[7] for the users. The UED is a small accelerator that typically operates with 3 MeV electron beams of low power. The typical power including the dark current is less than 3 mW. Two options were considered for the shielding of x-rays generated by the UED. The first option was to place the UED inside a shielding enclosure that personnel could work inside if the machine was off. The second and selected option was to enclose the UED inside Pb shielding that is close to the machine and allow workers to be in the room with the shielded machine. The UED shares an environmental room (ER) with several lasers. The configuration is displayed Figure 1 with the UED gun to the right and the detector to the left. None of the shielding planned for the UED is shown. The area for the UED has an entrance door on the west side of the environmental room near the Linac east-shield wall. A fixed barrier separates the lasers areas from UED area. The laser rooms have their own entrance on the east side of the ER.

---

[2] See appendix on Klystron
[3] These numbers are based on the dark current being 100 times the laser driven current at the same energy.
[4] See for example NCRP Report No. 144, Radiation Protection for Particle Accelerators, National Council on Radiation protection and Measurements, 2003.
[5] The beam parameters for the dark current have been used.
[6] See OPM 9.1.11. http://www.c-ad.bnl.gov/esshq/snd/opm/Ch09/09-01-11.PDF
[7] This allows most areas to be posted as a Controlled Area but a TLD not required since the yearly exposure would be under 100 mrem.

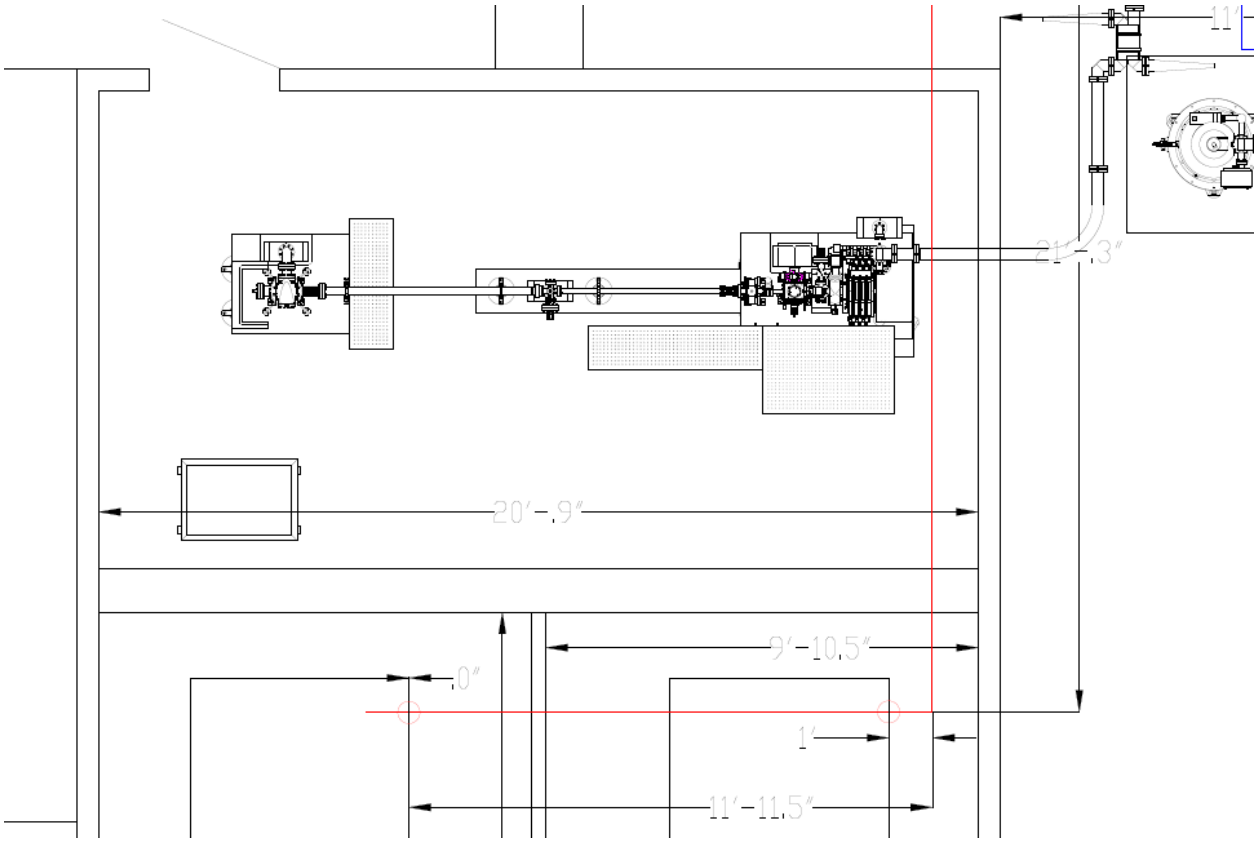

Figure 1: The layout of the UED in the environmental controlled room (ER). A fixed barrier separates the UED area from the laser areas. The UED has a single entrance between the ER and the Linac shielding.

Beam Optics and Beam Loss Locations

The UED has three main sources of x-rays during routine operations. These sources are:

1. The gun will give off x-rays as part of its routine operation.
2. The collimator will intercept a large portion of the beam. The collimator box also has a Faraday cup inside which can be a target for the beam.
3. The beam that goes through the collimator will be transported to the Faraday cup and the end of the beam line.

In addition to these routine sources there is a diagnostic Faraday cup in the middle of the beam transport that is rarely used. The samples used for analysis in the machine are very thin and do not represent a thick target for the generation of x-rays. The locations of these potential sources and other machine components are shown in Figure 2.

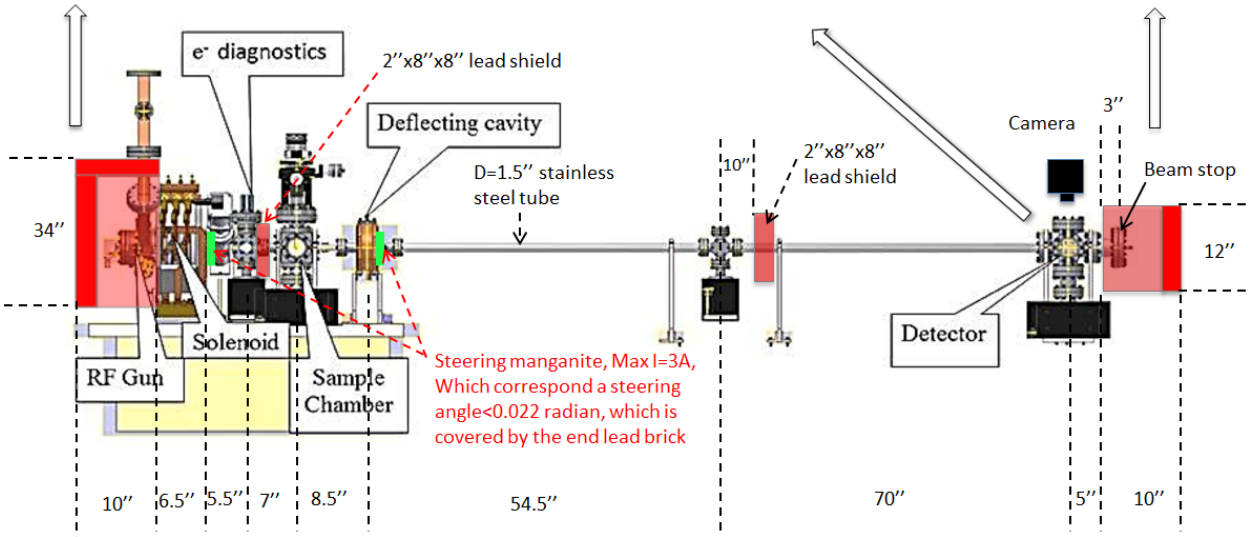

Figure 2: Elevation view of the UED. The Faraday cup and Collimator are in the diagnostics chamber between the gun and the sample chamber. The shielding shown is the existing shielding not the shielding planned for the Building 912 installation.

The beam characteristics have been reproduced[8] by M. Fedurin and are shown in Figure 3. Routine operations will have about 90% of the beam and dark current lost on the collimator aperture. The collimated beam clears the detector aperture and terminates in the beam stop. If the solenoid has no current the beam size at the detector is 4.06 mm and would clear the detector aperture. The corrector dipoles can only deflect the beam to 0.022 milliradians and cannot steer the beam out of the beam pipe. If a fault enables beam to be steered into the wall of the beam pipe the angle of incidence will be shallow and beam will not penetrate the beam pipe.

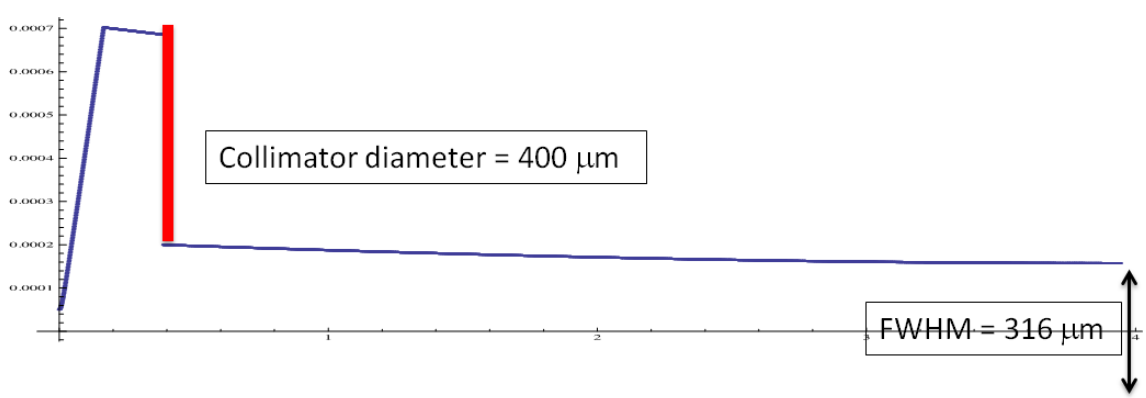

Figure 3: The beam profile along the UED with the solenoid operating at 130 Amperes and the collimator in place. The aperture in the mirror and phosphor screen is 4.5 mm.

Shielding Plans for the UED

The use of shielding close to the UED requires planning with the UED users to ensure that they have access to the necessary components of the machine. A detailed design will take time to develop. However, a specification of the required shielding thicknesses can be given for specific geometries. Pb available from the decommissioned SDL machine is expected to provide most of the Pb to be used for shielding for the UED.

[8] M. Fedurin to D. Beavis, May 27, 2015; **LINK.**

MCNPX[9] was used to evaluate the shielding thicknesses to be placed near the UED. Simple geometries were sufficient to address the shielding needs of the machine. The goal is to have the area posted as a Controlled Area. No TLD will be required for workers in the area. The geometry used to approximate the Faraday cup is shown in Figure 4. The Faraday cup is a stainless steel flange that is electrically isolated. In MCNPX the flange has been approximated by a circular disc of stainless steel 1cm thick and 5 cm in radius. A beam of 3.0 MeV electrons strike the center of the flange on the front surface. Shielding in the forward direction is a disc of Pb 12.5 cm thick starting at 30 cm downstream of the Faraday cup. The side shielding is a cylinder with an inner radius of 30cm and an outer radius of 37.5 cm. The dose rates per electron were tallied on the sides[10] at a radius of 45 cm and in the forward direction at a distance[11] of 45 cm from the Faraday cup. Fluence to dose conversion factors were used to obtain the dose per electron.

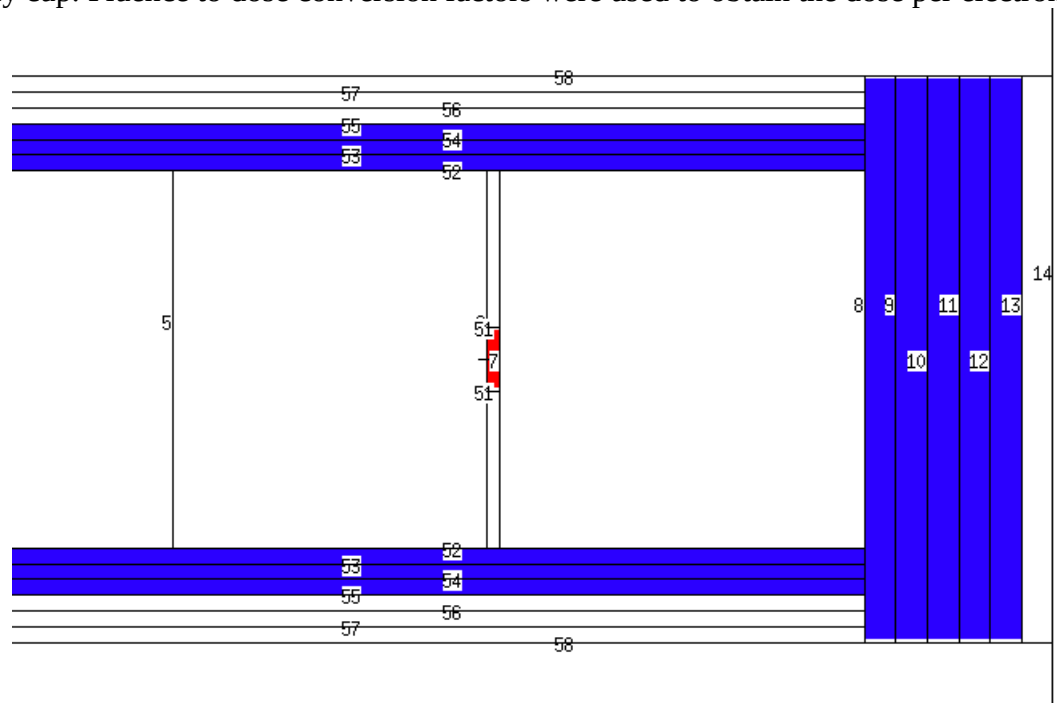

Figure 4: MCNPC model of a 1 cm thick stainless steel flange inside Pb shielding. The side shielding is a cylinder with an internal radius of 30 cm and a thickness of 7.5 cm. The end shielding is 30 cm downstream of the flange and has a thickness of 12.5 cm. The 3.0 MeV is incident on the stainless steel disk from the left. Dose rates are tallied on the surfaces.

The dose rates were evaluated for $2.25*10^{13}$ e/hr at 3 MeV. This represents the 3 mW of dark current hitting the flange at the end of the machine. During most operations 90% of this should strike the collimator which is several meters upstream. The model was used with and without the shielding to evaluate potential radiation levels which are given in Table II. The goal of 0.05 mrad per hour is nearly achieved[12] with three inches (7.5 cm) of side shielding and five inches (12.5 cm) of forward shielding.

---

[9] D. B. Pelowitz,Ed. "MCNPX User's Manual, Version 2.5.0", April 2005; version 2.5f was used for these calculations.

[10] This is surface 58.

[11] This is at surface 14.

[12] The request for 0.05 mrad/hr or less does not have to be strictly met. The dark current could actually be ten times lower than the value used. There are dose rates up to five times higher at small radii downstream of the shield.

Thick target dose rates are higher than the results from MCNPX. The thick target formulas are intended to give conservative results. They are approximately three times higher than the numbers presented in Table II and provide reasonable numbers for preliminary or final design. The thick target numbers also serve to provide a second, although not totally independent, estimate of the radiation levels.

Table II: Photon Dose Rates (3 mW at 3 MeV)

Location	No shielding mrads/hr	Shielding (Figure 4) mrads/hr
Backward	45	NA
Sideward	25	0.08
Forward	85	0.05

The collimator should be the main source of radiation during operations. Shielding placed immediately downstream of the collimator can be used to reduce the thickness of the side shielding. The shielding will need access ports for the camera, the sample chamber and several other areas. The access ports will either be locked with standard locks or with a Kirk key system. The key system should be coupled to the on/off for the klystron.

Penetrations

The penetrations will need to be calculated as part of the detailed design. Based on Table II they will need to reduce the radiation about a factor of 0.001. Some elevated dose rates for small areas would be allowable, if a whole body dose is not possible. Simple one or two legged labyrinth should be able to provide this amount of attenuation. A few examples will be given.

To estimate the size of one and two legged labyrinths the entrance dose rate must be known. It will be assumed that the labyrinth is irradiated with transverse dose at a distance of 15 cm from the beam axis. Based on Table II the entrance dose will be 225 mrads/hr. An attenuation of 10^{-4} will be the goal for these examples. The results for penetrations with selected internal radii are given in Table III. The advantage of using two legs rather than one is clearly evident in the table.

Table III: Example Labyrinths to Achieve 10^{-4} Reduction in Photon Dose

Radius (cm)	Length (cm) One leg	Length (cm) Two legs equal length
1.27	39.	3.9
2.54	78.	7.7
5.08	156.	15.6
10.16	312.	31
15.25	468.	47

Dose from Direct Electrons

The beam pipe has an I.D. of 1.375 inches and a wall thickness of 0.06 inches (0.15cm). For 3 MeV electrons the range in iron is 0.26 cm. An angle of 35 degrees relative to the beam pipe wall would be needed for beam electrons to escape outside the beam pipe and provide dose. Although this may be possible with the solenoid in the wrong polarity the electrons would transverse[13] more material than the thin walled beam pipe. Only a thin window would allow beam electrons to escape the vacuum enclosure; None exist in the design. There can be exposure due to electrons only though hard scattering or pair production. This dose is lower than the photon dose for the UED.

Possible Fault Dose Rates

The UED may be able to function up to 5 MV. The transverse radiation would increase by 50% and the forward radiation would double. Based on the dose rate in Table II these are not a real concern. Simple administrative controls should be sufficient.

The laser could pulse at 47 Hz instead of 10 Hz. Since the radiation levels are dominated by the dark current the dose rates would increase only slightly.

The RF system could increase in output power. Based on the information[2] on the Klystron the routine operation is at 1/100th of its maximum output power rating. An increase in input power to the gun should result in a similar increase in the dose rate from dark current. Thus it is possible that the dose rates could increase a factor of 100 to 5-10 mrads/hr. However, the gun is not expected to be able to operate with such power increases.

The quantum efficiency (QE) of the cathode does appear low[14]. An increase in the QE of the cathode could cause an increase in the pulses beam current. Changes to the cathode would need to be controlled along with the laser intensity.

Based on these considerations there do not appear to be any potential for elevated dose rates other than a compromise in the shielding or an error in its design.

Appendix I: Klystron

E-mail by M. Montemagno on June 29, 2015

The UED RF gun is powered by an S-band klystron amplifier manufactured by Toshiba, Japan; model E3730A. The output RF frequency is 2856MHz.
The maximum RF output specifications are:

- 50MW
- 4 micro seconds pulse width
- 50 pulses per second (pps)

[13] This statement should be verified.
[14] This comment is based on verbal conversations at ATFII meeting.

The klystron is shielded with preformed lead from the manufacturer.

The maximum RF power required by the UED RF gun is: (as per Yimei Zhu)

- 5MW
- 2 micro seconds pulse width
- 10pps

The pulse width is fixed by the number of capacitors in the pulse forming network, PFN. This limits the pulse width to 2 micro seconds.

The klystron output power is limited by 2 factors, the input RF power and PFN charge voltage.

1. The PFN charge voltage can be fixed at the capacitor charging power supply, CCPS.
2. Attenuators can be installed and secured at the klystron RF power input. This will limit the input power thereby limiting the output power.

The RF gun cannot tolerate excess RF power else an arc will discharge within the interior vacuum area. An arc will spoil the vacuum and trip the vacuum interlock. The vacuum interlock will automatically shut down the klystron high voltage pulsed power.

The repetition rate, pps, is limited by the CCPS's ability to charge the PFN capacitors before the next trigger pulse. I was unable to test the charging rate of the UED's PFN before it was disassembled. Using the ATF CCPS as a guide I was able to estimate the maximum pps to be about 47.