Collider-Accelerator Department

BROOKHAVEN NATIONAL LABORATORY

Building 911B – P.O. Box 5000
Upton, NY 11973-5000
Phone 631 344 7124
Fax 631 344 5568
beavis@bnl.gov
www.bnl.gov

managed by Brookhaven Science Associates
for the U.S. Department of Energy

Memo

Date: *May 23, 2016 (Revised 10/19/2016)*

To: *RSC, J. Tuozzolo, A. Fedotov, A. Drees, J. Fite, D. Kayran, and D. Phillips*

From: *D. Beavis*

Subject: *Guidance for LEReC Beam Dump Shields (revised)*[1]

The LEReC project has requested guidance on the shielding for the electron beam dumps. The experiment will operate with an upper energy of 2.6 MeV. The project would like to use all three beam dumps up to full energy but only the last beam dump will be rated for full beam power. The performance requirements for the beam dumps differ based on their use by the Project. The basic requirements are given in Table 1. It may be possible for the beam to have higher energy, but routine operation above 2.6 MeV is not intended. Therefore, the beam dumps are evaluated at beam energy of 2.6 MeV.

Table 1: Beam Parameters for Dump Shielding

dump	Maximum routine energy (MeV)	Maximum beam power (kW)	comments
End dump	2.6	117	ERL beam dump
Diagnostic dump	2.6	0.5	Peak power of
Gun diagnostic dump	2.6	10	CeC copper dump

The layout of LEReC is shown in Figure 1. The beam is terminated in the end dump, which is in the tunnel near the RHIC triplet. This dump and associated shielding must be designed for the full LEReC beam power of 120 kW. The diagnostic beam dump is in the tunnel after the triplet. It is intended to be used for beam studies at low average beam power, but high instantaneous average beam power. There is not a specific design for the diagnostic dump at this point but the small beam power should alleviate the need for shielding. The gun diagnostic beam dump is in the IR and used to optimize the gun and acceleration cavity operations at moderate beam power.

The beam energy is sufficiently low that there is no activation related to the beam striking the beam dumps or other objects. The issues that the beam dump shields must address are external radiation, ozone production, hydrogen generation in the cooling water, and radiation dose to nearby equipment. Due to limited space and difficulties in lifting heavy shielding in the tunnel the Project would like to understand the initial shielding requirements so they can determine an economical means to satisfy the requirements. Simple models of the dumps will be used to provide initial guidance.

[1] This report was revised to add more explicit information on ozone production for the gun testing under a requested exemption.

End Dump

The LEReC Project will move the ERL beam dump from the ERL area to the RHIC tunnel near IR2. This beam dump was designed for 3 MeV beam with a beam power of 1 MW. The use of this dump at LEReC will be at a beam power that is 10% of its design capability. However, the dump at ERL has a large-thick shield, which would be difficult to use in the RHIC tunnel.

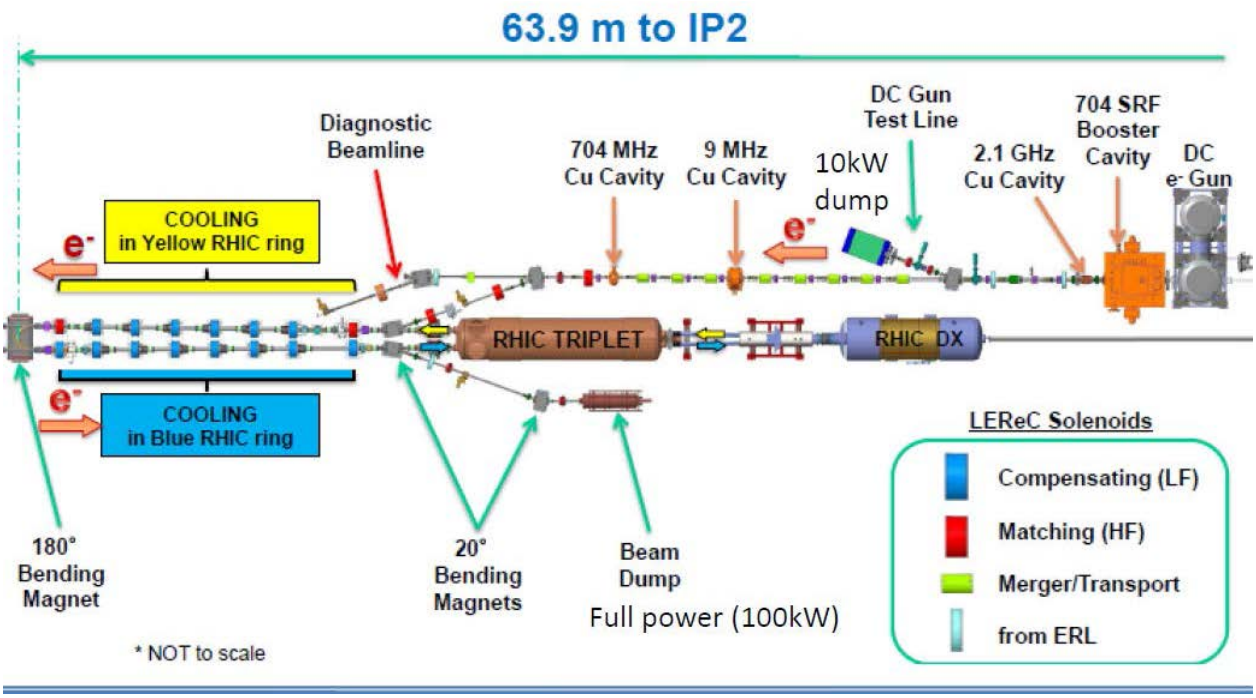

Figure 1: The layout of LEReC at RHIC. The three beam dump locations are depicted in the layout. The

A simple schematic[2] of the ERL beam dump is shown in Figure 2. The beam impacts the copper dump along the downstream portion of the beam dump. The copper has grooves machined in the side which are covered by thin stainless steel to form water channels for cooling. The copper forming the sides of the dump are at least 1.65 cm thick from the inside to the outside. A simple approximation is to assume that the beam dump is a rod of copper 60 cm long and has a radius of 1.5 cm. The beam is generated on the axis of the rod from 5 cm to 55 cm. This approximation was used in MCNPX to examine the ozone production and dose near the beam dump.

[2] K. Yip, Feb. 15, 2012, "Hydrogen Generation in ERL Beam Dump Water"; http://www.c-ad.bnl.gov/esfd/RSC/Memos/kin_dump_water.pdf

Figure 2: Simple layout of the ERL beam dump. The water pipes are shown at the end of the beam dump. This model was used by K. Yip to evaluate the hydrogen generated in the water.

The ionization in the air will produce ozone. The ozone concentration can be a health concern. The Threshold Level Value (TLV) is 10^{-7} for ozone concentration. The ozone can also cause damage to some materials, which is not addressed in this report. The ozone concentration will require some judgement on the air volume and potential air exchanges for an area. The air exchanges will be ignored in the calculations, but can be considered in deciding the thickness of the shield. The methodology of Swanson[3] will be used to estimate the potential ozone concentration. The ozone concentration saturates in a short time due the decomposition time of 0.83 hours. The saturation concentration is given as $C_s = P*T/V$, where P is the hourly production rate, T is the decomposition time in hours (.83 hr), and V is the volume of the air.

The air ionization was calculated using an air volume with a radius of 200 cm and a length of 460 cm[4]. The 10 kW of beam produced a total ionization in the air volume of $3.3*10^{17}$ MeV/hr. Using 7.4 ozone molecules per 100 eV an ozone saturation concentration of $1.3*10^{-5}$ is estimated. This is 100 times the TLV. The total air volume in the sector is about 100 times larger than used in the calculation. However, there is additional ionization in this air volume[5]. The air exchanges between the outside air and the tunnel air would lower the concentration. However, a conservative approach[6] would be to ignore these exchanges. Before drawing a conclusion on shielding for ozone production the dose to objects near the beam dump will be examined.

The absorbed dose adjacent to the beam dump can damage equipment. A copper cylindrical tube with an interior radius of 90 cm and a wall thickness of 1cm was used to measure the absorbed dose at a radius of 3 feet from the beam dump. A Pb shield 5 cm thick was added to the model and the absorbed dose tallied in the copper tube. The Pb shield was approximated as a cylindrical tube with an inner radius of 30cm and terminated with a disc of PB at the end of the beam dump. Figure 3 displays the absorbed dose as a function of the longitudinal location with an without the Pb shielding. The 5 cm of Pb reduced the dose by a factor of 100 at the peak of the distribution.

---

[3] W.P. Swanson, Radiological Safety Aspects of the Operation of Electron Linear Accelerators, IAEA Report No. 188, 1979.

[4] There are 200 cm before and after the copper rod used to approximate the beam dump.

[5] A rough estimate would have the production increase with the path length and the volume of air increase as the path length cubed. This would suggest a decrease in concentration of 20 although it depends on air mixing on a time scale of a few hours.

[6] It is not known to the author if there are measured or calculated air exchanges for the tunnel air with the outside air.

The shoulder in the forward direction is caused by the penetration of the forward gamma rays. This can be reduced by using additional Pb located at the end of the beam dump. The operating lifetime of LEReC needs to be considered for equipment protection from the radiation.

RHIC operates for approximately one-half of the year. Assuming that LEReC is on for 3000 hours per year and has a lifetime of three years we need to consider a total absorbed dose from LEReC for 9000 hours of operations. Figure 3 suggest that objects close to the beam dump could have a total absorbed dose of 10^{10} rads. Many materials are not recommended for this magnitude of absorbed dose.

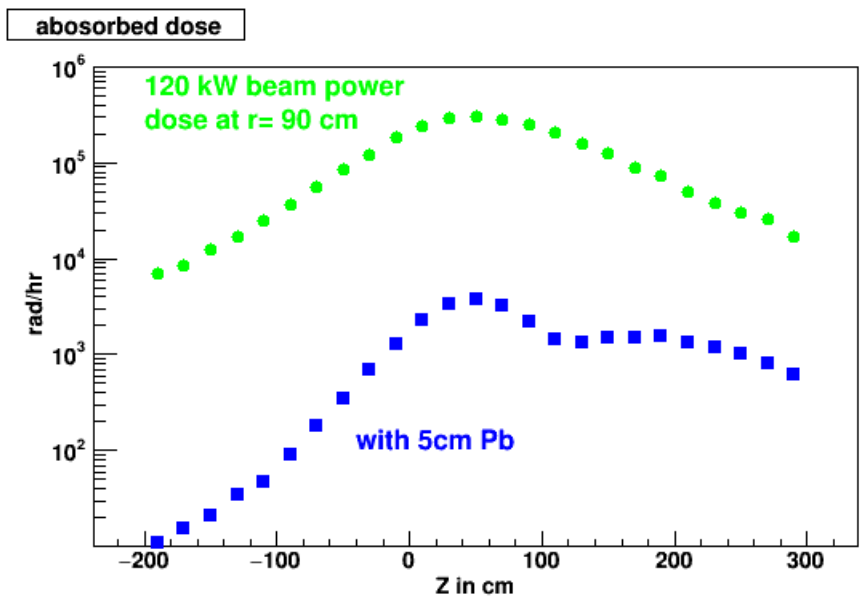

Figure 3: The absorbed dose in a copper tube with an inside radius of 90 cm. The rod used to simulate the beam dump starts at z=0 and ends at Z=60.

Equipment near the beam dump should be examined for materials that are not radiation resistant. Cable insulations and electronic components typically can be sensitive to radiation damage. There are many compilations on radiation damage of materials for space and accelerator environments. A sample from an early NASA report[7] is shown in Figure 4. Most insulating materials are suitable for use from 10^6 to 10^9 rads. Teflon is not recommended for high absorbed dose. Mylar also has a low radiation tolerance. Depending on the use of a material it may continue to function with substantial radiation damage. The materials used in the triplet magnet and in the adjacent cable trays should be examined to determine which materials may be at risk to radiation damage. Then an appropriate total dose can be determined and the shielding designed. A conservative dose goal until more work is conducted would be 10^6 rads.

[7] C.L. Hanks and D.J. Hamman, "Radiation Effects Design Handbook; Section 3. Electrical Insulating Materials and Capacitors", NASA CR-1787, July 1971.

10 cm of Pb would reduce the total absorbed dose to less than one Mrad at 90 cm. Determination of materials and distance can be pursued to reduce the amount of shielding. The shielding in the forward direction should be about 1.5 to 2 times thicker than the side shielding. When the locations and materials are identified then a more careful analysis can be conducted.

Placing shielding near the beam dump to reduce absorbed dose by a factor of 100 will result in decreasing the ozone concentration below the TLV even for the conservative numbers that were used for the air volume.

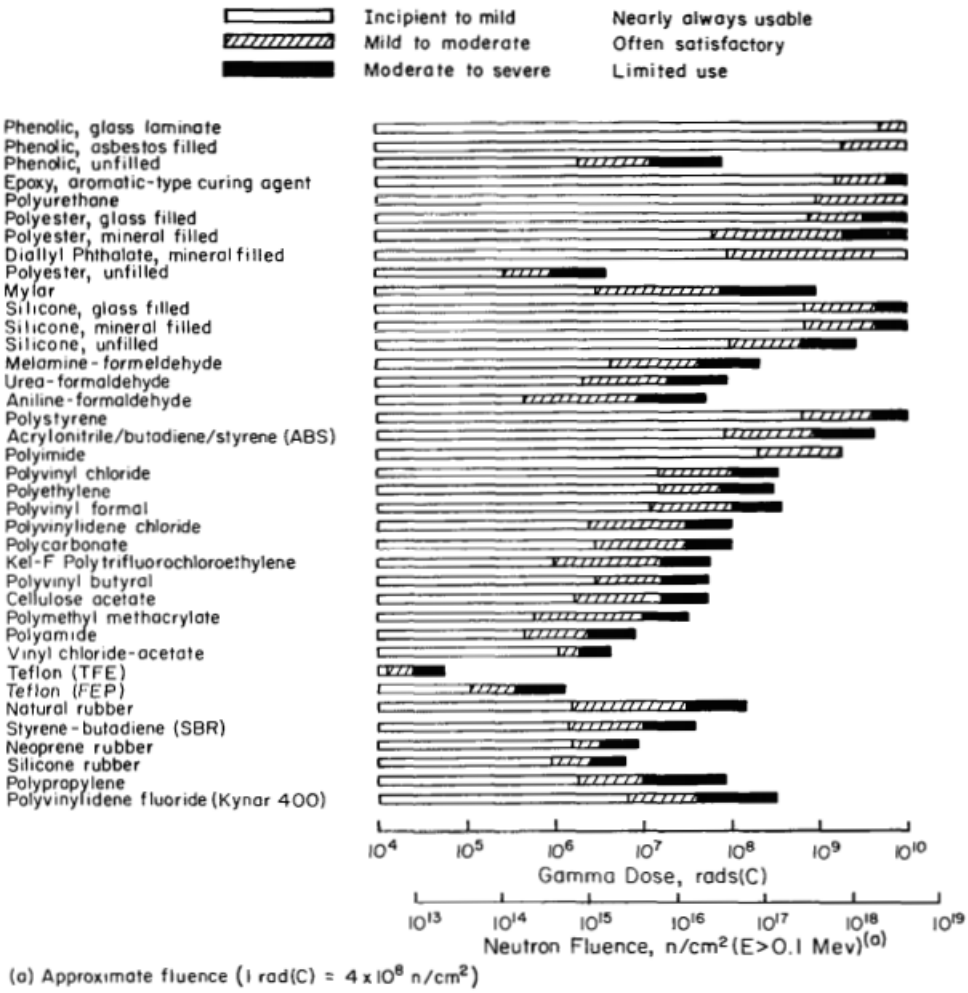

FIGURE 3. RELATIVE RADIATION RESISTANCE OF ORGANIC INSULATING MATERIALS BASED UPON CHANGES IN PHYSICAL PROPERTIES

Figure 4: Taken from footnote 7.

The hydrogen generated in the cooling water of the ERL beam dump was calculated by K. Yip[2]. The geometry of the beam on the dump should be very similar and therefore the results of footnote 2 can be scaled by the ratio of the beam powers. 0.6 liters per hour of hydrogen would

be expected to be produced in the cooling water and released at a point along the water path. The release of 4.8 liters per hour for ERL was not considered an issue and therefore it is expected that this is not an issue for this beam dump in LEReC. The present release point for gases in the cooling water for CeC PoP is in building 1002A. LEReC will use the same water system but the release point for gases from the water should be defined for LEReC.

The attenuation of the photon dose in the berm soil is shown in Figure 5. A TVL of 25 cm is shown in the figure. The berm is 13 feet thick and the tunnel roof is about 10 feet above the beam dump. The dose at the berm surface is estimated to be $1.35*10^{-9}$ mrads/hr for 120 kWs of 2.6 MeV beam on the beam dump. No shielding is needed to limit the dose on the berm. Local penetrations will need to be examined.

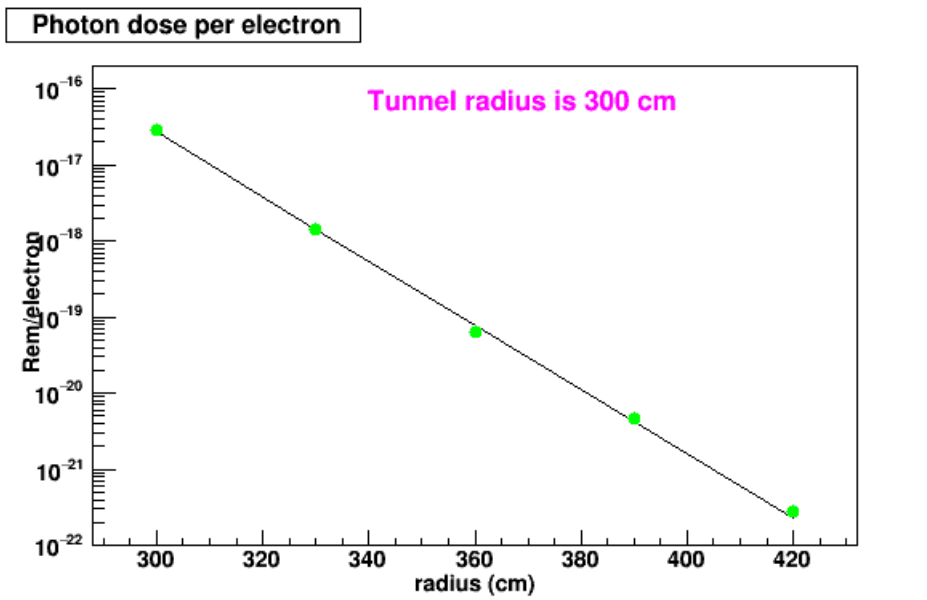

Figure 5: The photon dose per electron for 2.6 MeV electrons striking the simulated LEReC end dump as a function of radius. The tunnel ceiling is assumed to be 300 cm above the beam dump. The line is an exponential with a TVL of 25 cm.

Recommendations for the shielding of the LEReC end dump are:

1. Examine the materials near the beam dump and determine their radiation resistance.
2. Until item one is complete, plan on up to 10 cm of Pb between the dump and the RHIC magnet. Plan on 15-20 inches of Pb in the forward direction. Pb should also be placed to reduce back-shine[8] from the beam dump.
3. Place the dump on a reasonable steel shield, 10-15 cm thick or a thick concrete pedestal.
4. Examine the instrumentation that is on the dump and ensure that it can withstand the dose, or has a suitable lifetime.
5. Determine the gas release point for the water system.
6. Examine penetrations near the beam dump.

[8] The simple rod model used underestimates the radiation in the backward direction since it requires radiation to transverse a substantial amount of copper.

Gun Diagnostic Beam Dump

The gun diagnostic beam dump will be the CeCPoP copper beam dump relocated to LEReC. The dump is intended to have 10 kW of beam power on it with routine energies from 0.4 to 2.6 MeV. This beam dump has been analyzed[9] for use in the CeCPoP experiment with typical energies up to 25 MeV and 8.5 kW of beam power. The beam dump will be located[10] in the north east corner of the IR. The roof of the LR is 112.5 cm of light concrete. The roof is 660 cm above the gun diagnostic beam dump. The dump was simulated in a manner similar to the end dump. A rod of copper 1.5 cm in radius and 15 cm long was used as the target. The beam of 2.6 MeV electrons starts at the 1 cm into the rod and ends at 10 cm. This should be conservative for estimating the dose rate out the roof. Figure 6 shows the photon dose attenuation through the IR concrete roof. The dose rate for 10 kW of 2.6 MeV beam is 1.2 mrad/hr on the outside roof surface[11]. Dose rates for beam at lower energies will be smaller.

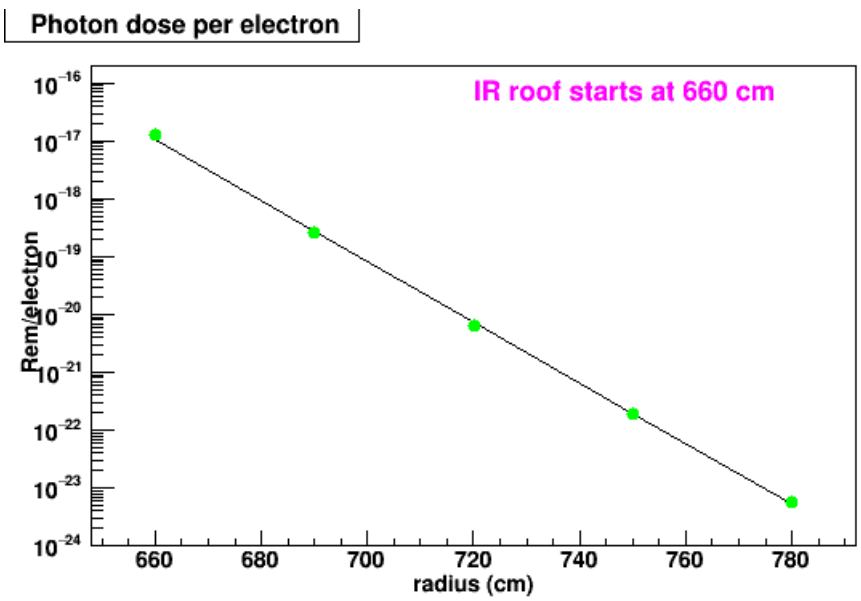

Figure 6: The photon dose per electron from the gun diagnostic beam dump as a function of distance through the IR2 light concrete roof. The outside of the roof concrete is at 772.5 cm but in this calculation ends at 780. The line is an eye-ball fit to the data with a TVL of 19.5 cm.

The side walls of the IR are thicker than the roof. Therefore the dose rate through the bulk shielding is not an issue. Penetrations of the shielding will need to be examined for potential radiation leakage.

The hydrogen generation in the cooling water can be scaled from the discussion[9] of the 25 MeV beam into the CeCPoP beam dump. The 2.6 MeV beam creates 15% of the x-rays relative to the

[9] D. Beavis, "Radiation Issues Related to the CeCPoP Water Cooled Beam Dump", March 2, 2016; http://www.c-ad.bnl.gov/esfd/RSC/Memos/3_02_16_CeCPoP(2).pdf

[10] See RSC Minutes of April 15, 2016; http://www.c-ad.bnl.gov/esfd/RSC/Minutes/04_15_16Minutes.pdf

[11] The TVL of 19.5 is used to adjust the 780 cm result to 772.5 cm.

25 MeV beam energy used in the CeCPoP estimate. Leaving all other assumptions fixed this would reduce the hydrogen generation to 0.02 liters per hour for 10kW of beam. The hydrogen generation in this beam dump is not an issue.

Ozone concentration in the air from the beam striking the gun diagnostic beam dump is calculated as discussed for the end dump. The model of the copper dump used for CeCPoP is surrounded by air. The air volume[12] used for this calculation was $1.2*10^9$ cm^3. The saturation concentration of ozone is $5.8*10^{-8}$, which is half of the TLV. No shielding is required for ozone.

The gun will be tested with 0.6 MeV electron beam to the diagnostic beam dump. The estimate of ozone production estimate for 2.6 MeV can be scaled[13] to estimate the production at 0.6 MeV with 60 kW of beam power. The ozone concentration at beam shutoff will be less than 0.058 PPM. This concentration will decay with a 50 minute half-life, but is already less than the eight-hour TLV (0.1 PPM) so no delay time for entry is necessary. A table of the average concentration for one to eight hour durations is given below. The average concentration is for the time from beam turn-off to the end of the period. The eight-hour average is 0.006 PPM which is well below the TLV of 0.1 PPM.

Time after beam turn-off (hr)	Ozone time averaged concentration (PPM)
0	0.058
1	0.038
2	0.022
3	0.016
4	0.012
5	0.010
6	0.008
7	0.007
8	0.006

There are other factors that will likely decrease the potential ozone concentration further. There will be shielding placed around the beam dump to reduce the potential damage to equipment due to x-rays, mainly at higher later higher electron energy operations. It is expected that the Machine Protection System (MPS) will not allow this much power into the beam dump at 0.6 MeV. The MPS is expected to limit the gun test to 10 kW of power to prevent damage to the beam dump.

The effectiveness of shielding around the beam dump was estimated by evaluating the reduction in ozone concentration. The shielding consisted of:

- 5 cm of Pb on each side
- 7.5 cm of Pb on the top

[12] The air volume of the IR is $2.9*10^9$ cm^3. The photon path lengths in the model are larger than in reality so the estimate should be conservative.
[13] The NIST tables were used for radiation production as a function of energy and the entire volume of the IR was used in the scaling.

- 10 cm of Pb on the downstream end
- 5 cm of Pb in the backwards direction around the beam pipe
- 10 cm steel base plate

The ozone concentration was reduced by more than a factor of 1000. This can also be used as a guide for considering dose reduction to nearby equipment. The side and top thickness were based on using the SDL U-shaped Pb pieces. Shielding can be added after the fact, but a thick base plate should be considered for initial installation. Side, top, and downstream shielding can be supported by the base or the IR floor.

The absorbed dose near the beam dump was calculated. The absorbed dose was calculated using a copper tube 1 cm thick at 90 cm from the axis of the beam dump. The azimuthal average has a peak value of 6200 rads/hr for 2.6 MeV beam with 10 kW. This should be considered for equipment near the beam dump. The distribution was binned into azimuthal bins to examine the peak dose due to asymmetries in the dump design. The peak dose rates are up to 20 times higher or 125,000 rads/hr at 90 cm. For items close to the beam dump, such as beam dump instrumentation, the dose rate can be 4-5 Mrads/hr. The absorbed dose at gun energies of 0.5 MeV will be substantially lower. The azimuthal average has a peak dose rate of 310 rads/hr at 90 cm for 10 kW of 0.5 MeV beam.

The beam dump should be considered as a potential source for penetrations. Using the labyrinth dimensions[14] given in footnote 14 and assuming that the dump is unshielded a conservative estimate of the dose rate is 0.9 mrads/hr at the labyrinth gate. This would be considered as a routine dose. The cryogenics pipe penetrations can have direct shine from the beam dump. Although not calculated here it could be a substantial dose rate. It would be recommended that several 5 cm of Pb or more be used to reduce the dose rates out the cryogenics pipe penetrations or a more detailed calculation be conducted.

Diagnostic Beam Dump

The 50 W of beam power onto the diagnostic beam dump should not create any radiation issues. This beam dump will have high intensity beam pulses of short duration. The mechanical design may need an energy deposition analysis to ensure that the dump design can accommodate the thermal cycles.

Conclusions

The dose rates from the end dump and the gun diagnostic beam dump are substantial and shielding should be carefully considered for equipment protection and ozone reduction. The gun diagnostic dump should have shielding added to shadow the cryogenics port. Any instrumentation placed on or close to the beam dumps should to be carefully examined for potential radiation damage.

---

[14] D. Beavis, " Accessible Penetrations and the Photon Dose from 25 MeV Beam Losses", April 2, 2016; http://www.c-ad.bnl.gov/esfd/RSC/Memos/4_02_16_25MeV.pdf