Collider-Accelerator Department

BROOKHAVEN NATIONAL LABORATORY

Building 911B – P.O. Box 5000
Upton, NY 11973-5000
Phone 631 344 7124
Fax 631 344 5568
beavis@bnl.gov
www.bnl.gov

managed by Brookhaven Science Associates
for the U.S. Department of Energy

Memo

Date: *March 2, 2016*

To: *RSC, I. Pinayev, D. Phillips, J. Tuozzolo, and A. Drees*

From: *D. Beavis*

Subject: *Radiation Issues Related to the CeCPoP Water Cooled Beam Dump*

The CeCPoP Project will use a water-cooled beam dump to absorb the 25 MeV electron beam at the end of the beam line. This report will use similar analysis as previously conducted for the low power beam dump[1]. The techniques[2] are conservative for 25 MeV since they are intended for higher energies. Some of the analysis requires a more detailed treatment than used for the low power beam dump to avoid unnecessary design effort due to overly conservative estimates. The dump was designed for 8500 Watts of 25 MeV electron beam. The issues addressed are:

- Beam dump heating (summarized in this report)
- Ozone concentration in the air
- Air activation
- Soil activation
- Water activation
- Residual activity
- Hydrogen generation

Water-Cooled Beam Dump

The water-cooled beam dump is constructed from copper and shown in Figure 1. A side view of the beam dump is shown in Figure 2. The thermal analysis included both temperature and stress analysis. The beam size is assumed to be increased to a 6mm sigma in x and y by quadrupoles upstream of the beam dump. Figure 3 shows the temperature profiles inside the copper for a centered beam at 10 kW. The low peak temperature of 40º C was a result of keeping the stress below appropriate limits near the apex of the taper. Initial designs included different tapers, conical shapes and aluminum. The lower stress results were achieved with this geometry and copper. A beam offset by 15 mm was also put into the analysis. The energy deposition calculations were conducted by D. Beavis using MCNPX and the power density data were transferred to L. Snydstrup for the thermal analysis. An engineering review[3] was conducted on the design.

---

[1] D. Beavis, Sept. 14, 2014; http://www.c-ad.bnl.gov/esfd/RSC/Memos/9_14_15_CeCPoP.pdf
[2] W.P. Swanson, Radiological Safety Aspects of the Operation of Electron Linear Accelerators, IAEA Report No. 188, 1979.
[3] J. Tuozzolo, April 3, 2014;

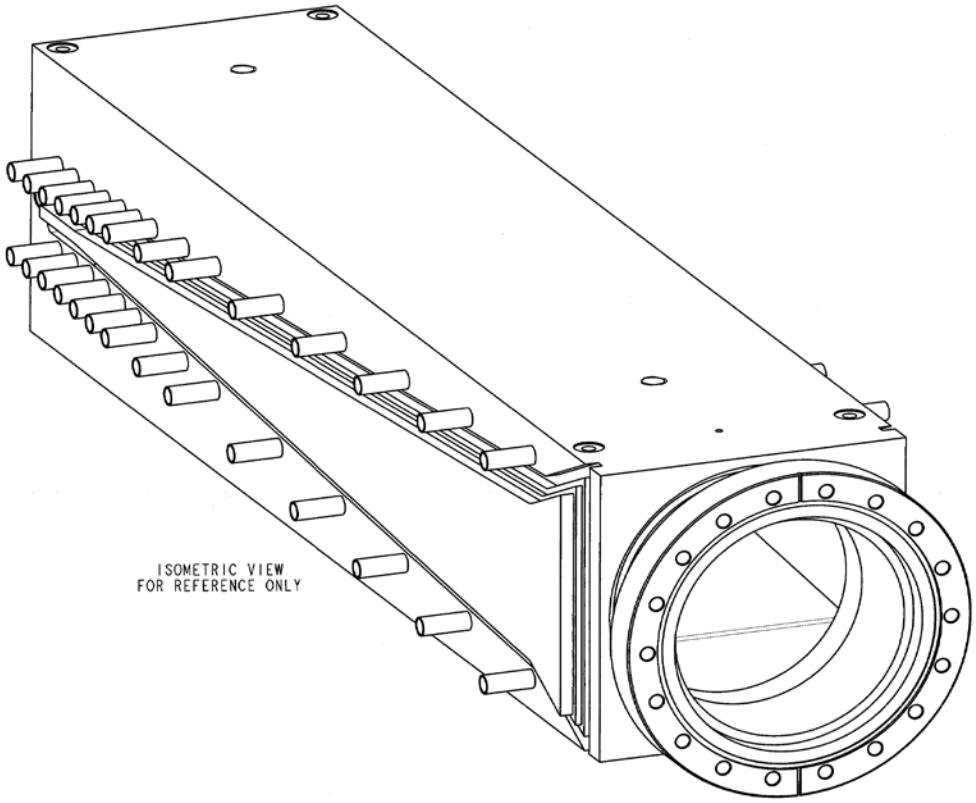

Figure 1: Isometric view of the CeCPoP water-cooled beam dump. The water pipes protrude on the sides. The beam dump was wire cut from a block of copper. The side panels are 1.2 cm thick. A conflat vacuum flange is attached to the front.

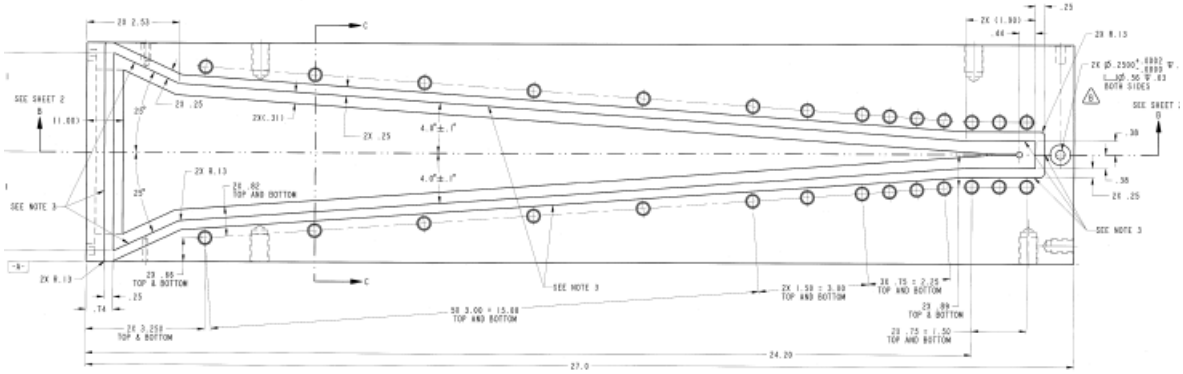

Figure 2: Side view of the beam dump. The overall elnght is 27 inches and 6 inches on a side. A long narrow slit with a round hole is located at the apex of the 4 degree slope to help relieve stress concenetration.

Thermal – Stress for Centered Beam (quarter symmetry shown)

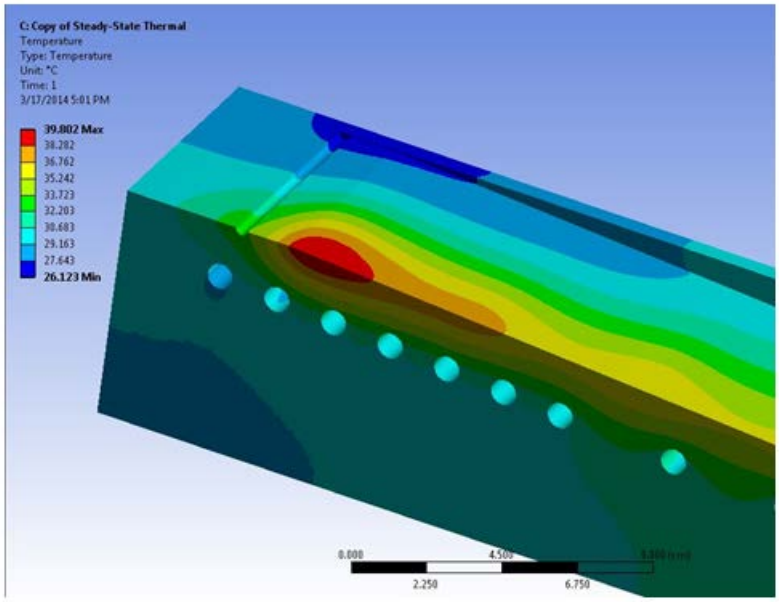

Maximum Temperature – 40C

Figure 3: Temperature profile for a beam spot of 6 mm (sigma) centered on the beam dump. Only a small temperature increase to 40 C occurs at the beam peak.

Figure 4: Photograph of the beam dump at the end of the test beam line. The ceramic insulator allows the dump to function as a Faraday cup. There are electrical isolations on the legs holding the dump. Beam was never delivered to the beam dump in this location.

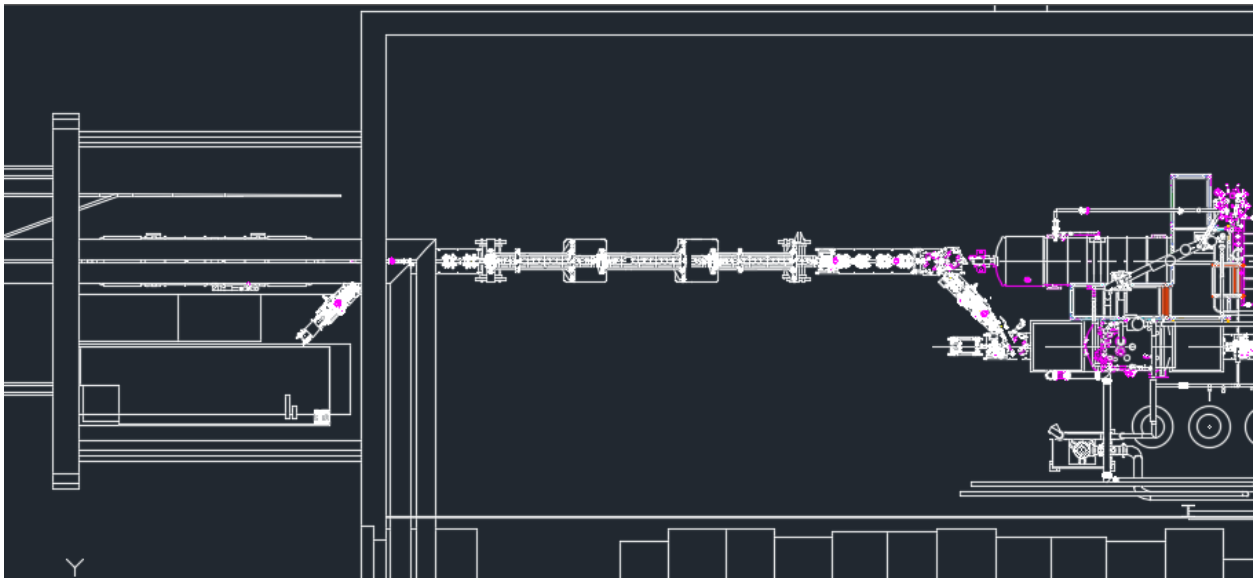

Figure 5: Plan view a portion of the CeCPoP inside the RHIC intersection region 2. The water cooled beam dump is located in the 26 foot diameter corrugated steel tunnel on the left-hand side.

Ozone Production

Ozone production is calculated in the same manner as discussed in the report[4] on the low power dump. The ionization in the air around the beam dump was divided into three sections and a mesh tally was used to calculate the total ionization in the air volume. It will be assumed that the beam will be operated for many hours so that the ozone concentration reaches the saturation value. The saturation concentration[5] is given as

$$C=p*DT/V,$$

where p is the ozone production rate, DT is the decomposition time, and V is the volume of air.

There are approximately 7.4 ozone molecules formed for each 100 eV of ionization. The model of the dump was surrounded by air for a radius of 5 meters and extending from 10 meters before the dump to 5 meters after the dump. The total energy deposited[6] in the air volume was calculated to be 0.023 MeV/s per 22 MeV electron into the beam dump. The ozone production rate, p, is 1720 ozone molecules per second per electron. The saturation concentration of ozone is 0.34 ppm), where 0.1 ppm is the TVL for ozone. The TVL is based on 8 hours of exposure. The short lifetime would reduce the concentration to 0.63% of the TVL after two hours. The air mixing within the IR hall[7] and the ventilation should reduce the number substantially. No additional controls[8] should be necessary to limit the ozone concentration. Measurement of the ozone concentration can be made to confirm the calculation.

---

[4] See footnote 1.
[5] The ozone molecules have a decomposition time of 0.83 hours in the absence of ventilation (from footnote 2).
[6] The total energy rather than the ionization energy was used.
[7] The volume of the main IR hall is 2880 m^3 compared to 1190 m^3 used in the concentration analysis.
[8] Shielding will be added to reduce the risk of exposure from the residual activity of the beam dump. The shielding will reduce the ozone production to negligible levels.

Soil Activation

High energy gammas and neutrons created in the beam dump can create activation products in the soil and concrete. Activation products in the soil can be leached by rainwater and transported to the water table. The beam dump is located over a concrete floor but the forward radiation points to the corrugated steel tunnel. The steel is relatively thin and there is soil immediately outside the steel. The possible production of tritium needs to be examined to ensure that the groundwater is properly protected from any tritium that can be leached from the soil. BNL soil is essentially composed[9] of hydrogen, oxygen and silicon. For the production of tritium we are mainly concerned with (gamma,t) and (n,t) reactions in the soil.

The photo-production of tritium from ^{16}O has a threshold of 25.0 MeV. This is above the intended nominal operating energy of the electron beam. The photo-production cross section for tritium on ^{28}Si is 27.5 MeV. The threshold on ^{29}Si is 24.6 MeV and on ^{30}Si is 22.2 MeV. The cross section above threshold should be a few 10^{-5} barns[10]. Photo-production of tritium in the soil shield should not be an issue for the 22 MeV electron beam energy.

C-AD uses the neutrons with energy greater than 20 MeV to estimate the tritium production. The threshold for production of tritium from ^{28}Si is 16.2 MeV for neutron reactions. The literature typically quotes[11] a threshold for measured cross sections of a few mb as 50 MeV. The NSLSII soil activation analysis[12] provides a table of cross sections and thresholds for soil analysis. Tritium production should not be expected from the neutrons from the beam dump.

The fluence above a tritium production threshold necessary to reach the BNL action limit can be roughly estimated for 100 hours of beam in a year. Several assumptions need to be made and can be scaled for a particular reaction. A production cross section of 10 mb, 8500W of beam power, 100 hours of operation, and 25 MeV beam energy are assumed. A fluence of 10^{-10} activating particles per cm^{-2} per electron would be required to reach the BNL action limit. This fluence is exceeded by the high energy gammas in the forward direction but not the neutrons with energies above 15 MeV. The photo-production threshold is too high for the beam energy used for CeCPoP. Photo-production could be an issue for soil activation if the beam energy was higher for the unshielded beam dump. Naturally one can add shielding to be beam dump in the forward direction to reduce the potential activation. MCNPX calculations estimate $2.5*10^{-7}$ gammas/cm^2 per electron exiting the front of the beam dump in the energy range 19-23 MeV. It is concluded that tritium production in the soil for CeCPoP will not be an issue.

---

[9] See http://www.c-ad.bnl.gov/esfd/RSC/Memos/Soil_9_09_14.pdf

[10] Thresholds based on IAEA database along with the graphs of tritium production on ^{28}Si and ^{29}Si. It is assumed that ^{30}Si production will be similar. 3.1% of natural Si is ^{30}Si.

[11] See T.A. Gabriel, "Calculation of Long Lived Induced Activity in Soil", ORNL-TM-2848 (1970).

[12] P.K. Job and W.R. Casey, "Preliminary Activation of soil, Air, and Water near the NSLS II Accelerator Enclosures", Technical Report no. 16, August 15, 2006.

Air Activation

The 22 MeV beam can create air activation products from the bremsstrahlung radiation escaping the beam dump. For 22 MeV the radionuclides of interest are ^{11}C, ^{13}N, and ^{15}O which are created by (g,n) reactions. The results for ^{13}N and ^{15}O were obtained using MCNPX fluences time approximate cross sections. The ^{11}C and ^{39}CL were obtained using number in Table XXXb of Footnote 2 and scaling to the ^{13}N results.

Table 1: Air activity from high Power beam dump at 8500W of 25 MeV

nuclide	Saturation concentration[13] pCi/cm^3	10CFR835 Inhalation DAC (pCi/cm^3)	10CFR835 Immersion DAC (pCi/cm^3)	Half-life Min.
^{11}C	0.026	100	6	20.34
^{13}N	740.	n.a.	6	9.96
^{15}O	32.	n.a.	6	2.05
^{39}Cl	2	2	6	55.5

These concentrations are expected to be conservative. The self-shielding of the beam dump has not been taken into account and air mixing with the IR should provide additional reduction[14]. Typical Derived Air Concentrations (DACs) are of the order of a few pCi/cm^3. It is clear from the DAC values given in 10CFR835, DOE guide G 441.1-1C, and the BNL Radiological Control Manual that these nuclides produced in the air will not be an issue for external dose or inhalation exposure. For the immersion dose each DAC corresponds to 2.5 mrem/hr of exposure.

Residual Activity

The dose rate from residual activity in the beam dump will exceed 500 rads/hr at a foot if the beam dump is unshielded. A shield will be necessary if access into the area is desired within the first few hours after electron beam operation. The potential activity for 8500 Watts of 25 MeV electron beam can be estimated using Table XIXb of footnote 2. The copper will have three isotopes contributing to the saturation activity and these are given in the Table below:

Table 2: Copper Saturation Activity for 8.5kW of 25 MeV Electrons

Radio-nuclide	½ life	Threshold MeV	Saturation Activity (Ci)	Saturation dose rate at 1 foot Rads/hr
Cu-61	3.32hr	19.73	3.15	22
Cu-62	9.76 min.	10.84	73.	440
Cu-64	12.8 hr	9.91	35.7	135

[13] A volume of $1.3*10^9$ cm^3 has been used representing a cylinder 5 meters in radius and 15 meters long.
[14] An air volume of $1.6*10^9$ cm^3 was used for the concentration.

It is expected that after running several days at 8.5kW that these activities will be achieved and the experiment will desire immediate access. Therefore, a shield needs to be constructed to encompass the beam dump. To allow access, the shield should reduce the dose rates to less than 100 mrads/hr so the area can be classified as a radiation area. A 10^{-4} reduction or more in dose rate is needed/desired. A pure Al beam dump would have dose rates essentially acceptable for a radiation area as the saturation activity is 10^{-4} lower if the ^{26}Al-m with a 6.37 half-life is ignored. However, most Al alloys that would be used for a beam dump have a few percent[15] of other elements. With the expected mixture of other elements in the Al alloy one might expect activation levels at 1% of the copper dump after a short decay time. A shield has been designed for the copper dump. The production of an Al alloy beam dump will be considered for the future.

Water Activity

The activity of the water has been calculated using two similar but different methods. The only isotope produced in water with 25 MeV electrons is ^{15}O, which has a half-life of 123 seconds. Swanson[16] suggests that for metal plate dumps 10% of the energy absorbed in the water is a reasonable amount to assume for the water activity. The saturation activity of ^{15}O for such a dump is 300GBq*8.5kW*0.1 = 280 GBq which is 7.56 Ci of ^{15}O. This activity will be mixed with water in the pipe, magnets and other components of the water system. We would expect this to be conservative due to the low energy of the electron beam.

MCNPX was used to estimate the number of photons/cm^2 per electron in the vicinity of the water paths for 25 MeV electrons into the beam dump. A mesh tally for flux using path length was used at y=2.3 cm for dx=16 cm and dz =14.6 cm. This area spanned the seven water paths near the end of the beam dump. A fluence of $1.15*10^{-5}$ photons/cm^2 per electron with energy greater than 15 MeV resulted from the estimate. The seven water paths have an area of 90 cm^2 and this number should be doubled for the water paths on the opposite side. The cross-section for photo-production should average less than 5 mb. The (gamma,xn) photo-production cross-section on ^{16}O is displayed in Figure 6. The resultant estimate is 0.06 Ci of ^{15}O. This is about a factor of 100 below the estimate assuming high energy and not the actual configuration.

The potential exposure rate can be estimated if the water volume is known. The specific gamma ray dose constant[17] is $7.18*10^{-4}$ mrem/hr per micro-Ci. If the water was located in a single small location the dose rate at a meter would be 43 mrem/hr. The dose rate one foot from the water pipes was estimated to be 0.1 mrads/hr. The RCTs will survey the pipes inside building 1002A.

---

[15] The alloy 6061 has 0.6% Cu, 0.28% Si, 1.0% mg, and 0.2% Cr. The lighter elements create products with short half-lives so a reasonable estimate would be to assume 1% Cu equivalent for the long half-lives.
[16] See footnote 2 pages 126 to 141.
[17] Health Physics and Radiological Health, 4th edition, 2012. See Table 6.22.

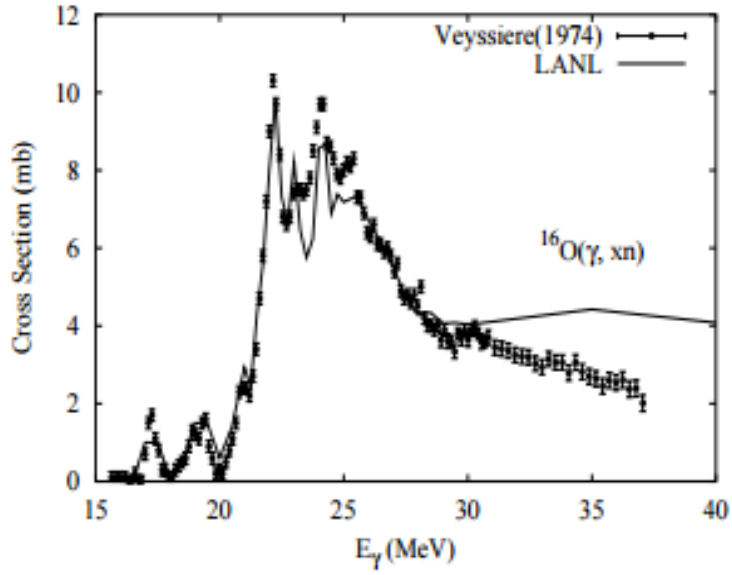

Figure 6: The photo-production cross-section for at least one neutron. A substantial portion of this reaction is the giant dipole resonance which creates ^{15}O.

Hydrogen Generation in Cooling Water

The ionization in the water can liberate hydrogen gas. 0.3 liters of hydrogen are generated per MW of ionization in the cooling water. If all 8500 Watts of electron power are deposited in the water then there would be 9.18 liters of hydrogen generated per hour. It is expected that a small fraction of the energy will be deposited in the water. The water channels should not receive much ionization from the electrons due to the transverse displacement. Most of the ionization in the water will be from photons. 30% of the incoming electron energy is converted to radiation. The area of the water pipes at the forward section of the beam dump is approximately .5 of the available area. In addition, only a portion of the photon energy goes into ionizing the water. This is the simple logic to suggest that 1% of the electron power goes into ionization providing a hydrogen production rate of 0.09 liters per hour. A more careful analysis can be conducted using MCNPX.