Final Draft August 31, 2016 to RSC Collider-Accelerator Department (C-AD) Low Energy RHIC Electron Cooling (LEReC) USI: Gun Assembly Test Using an Exempt Accelerator Safety Analysis

B1002, RHIC 2 O'clock Intersection Region

Revision 0 August 2016

R. Karol, A & R Division, C-AD **Date**

E. Lessard, Associate Chair for A & R, C-AD **Date**

T. Roser, Department Chair, C-AD **Date**

B. Mueller, Associate Laboratory Director, Nuclear and Particle Physics **Date**

G. Mattson, Assistant Laboratory Director for ESH, BNL **Date**

Title of Facility: Low Energy RHIC Electron Cooling (LEReC) USI: Gun Assembly Test Using an Exempt Accelerator Safety Analysis
Building Number: B1002, RHIC 2 O'clock Intersection Region

Date of Initial Safety Analysis: Revision 0, August 31, 2016
Subsequent Revision Dates:

Section 1: Introduction[1]

The Low Energy RHIC Electron Cooling (LEReC) Gun Assembly accelerator located in the RHIC 2 O'clock Intersection Region (B1002) is an exempt accelerator, satisfying the criteria for exemption in DOE 420.2C, paragraph 3.c. (1). This accelerator and associated experiment hazards can be safely managed under the provisions of Title 10, Code of Federal Regulations (CFR), Part 835 and Part 851. This safety analysis shows that a LEReC Gun Test results in hazards that are not complex, and are only capable of producing minor local work area impacts. Thus LEReC operations and maintenance activities can be safely controlled by meeting the requirements in the BNL Radiological Controls Manual for ionizing radiation control, and by complying with the BNL Worker Safety & Health Program through the BNL Standards Based Management System and C-AD Operations Procedures.

The final Low Energy RHIC electron Cooling (LEReC) system being added to the RHIC rings at intersection region (IR2) cools low-energy RHIC heavy-ion beams (see Figure 1). The electron bunches from the cooler are not delivered to any experiment and are used only to improve the ion-beam collision conditions for the Beam Energy Scan II (BESII) physics experiment that STAR will perform at IR6 in an effort to determine the existence of a critical point in the QCD phase diagram. LEReC is designed to provide better ion-beam luminosity and longer store times for physics at energies in the range from 3.85 to 5.75 GeV/nucleon.

Figure 1 shows the detailed design of the entire LEReC accelerator, which is about 100 m long from the DC gun to the final high-power beam dump. Figure 2 shows layout of LEReC Injection section from the DC gun to the diagnostic beam dump and its configuration which is planned to be installed in the last quarter of 2016 for DC gun tests in January 2017. The gun testing setup in the upper view of Figure 2 is the subject of this safety analysis. For the Gun test there is no superconducting Booster cavity in the accelerator setup and the electron beam does not connect with the RHIC ring. The Gun test setup is a stand-alone accelerator located in IR2.

For the exempt accelerator tests, LEReC physicists will start with beam power of 1 – 10 W for initial testing with eventual permission to go to a reasonably test power, e.g., up to 25 kW at 400 kV. The radiation safety limit on power is 25 kW at 400 kV which was the assumption for the shielding analysis and design.

[1] The information in this section was provided by A. Fedotov of the Collider-Accelerator Department.

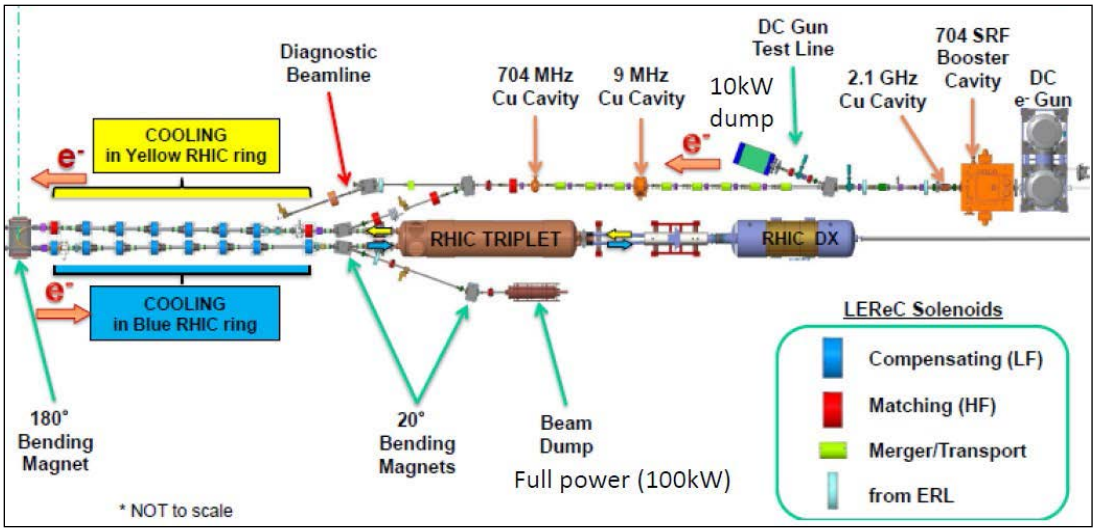

Figure 1. LEReC Electron Accelerator Layout in IR2

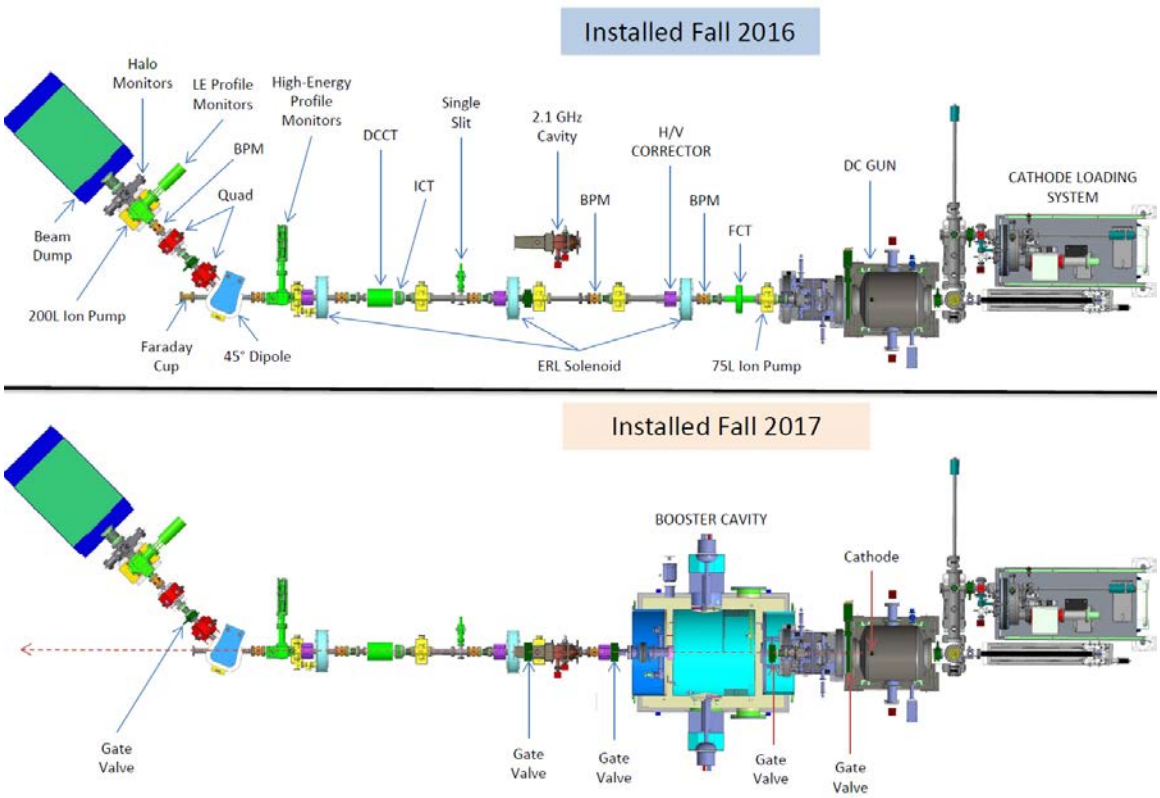

Figure 2. Layout of LEReC Injection Section which will be installed for Gun tests in Fall of 2016 and its Current Configuration for Commissioning in the Fall of 2017

The LEReC gun test (Figure 3) is the first stage of LEReC configuration. The goal of the gun test is to first test critical LEReC equipment with low-power electron beam. Components to be tested include:

a) Laser beam delivery system (laser, laser shaping, laser transport, laser pulse stability, etc.)
b) Vacuum components with control
c) Cathode manipulation system
d) DC gun characterization (stability, maximum operation voltage, electron beam quality)
e) Magnets, power supply
f) Beam instrumentation: charge and current measurements, beam position (response matrix) measurements, beam loss monitor system, beam profile and halo measurements
g) Controls system (timing system, machine protection system, control of laser, gun power supply, magnets power supplies, beam instrumentation)

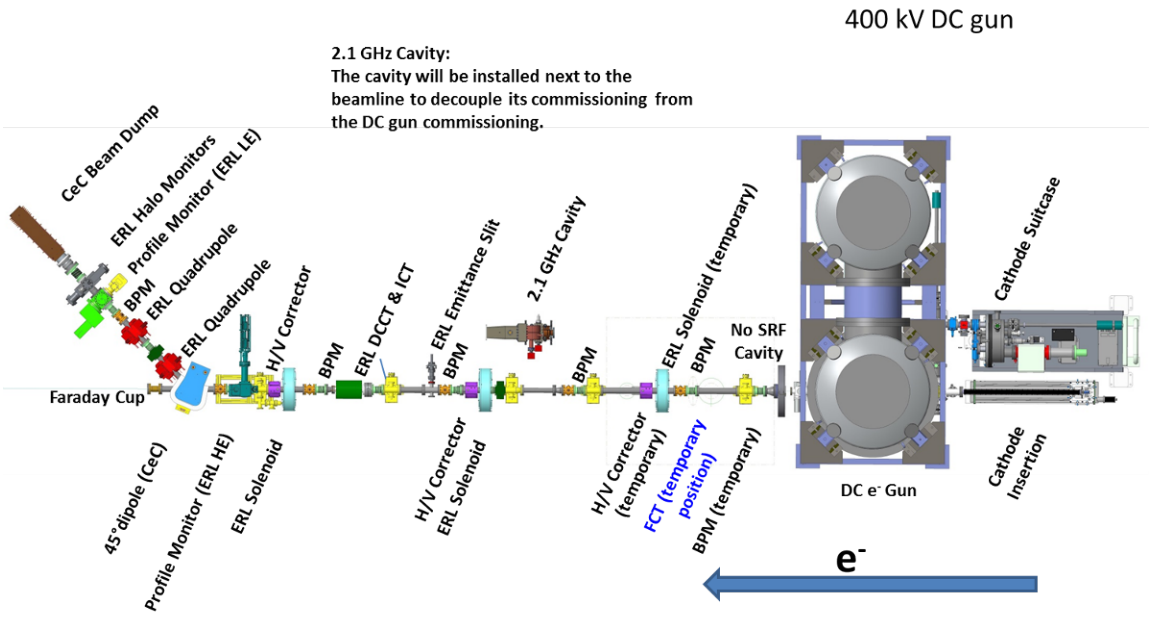

Figure 3. Gun Test Layout

The gun testing program is designed to measure the following beam parameters:

- Beam energy and energy spread
- Emittance (ε) and Twiss parameters (α, β) using solenoid scan and/or slits.
- longitudinal and transverse halo

Gun testing design parameters are shown in Table 1.

Table 1: LEReC Gun Test Beam and Dump parameters

Parameter	Value	Units
Kinetic Energy	0.4	MeV
Bunch charge	130	pC
Laser frequency	704	MHz
Laser pulse duration	50	psec
Maximum macro-bunch charge	3.9	nC
Maximum acro-bunch repetition rate	9.3	MHz
Normalized emittance	1-1.5	mm mrad
RMS bunch size	1-3	mm
Initial Power Maximum average power	1 – 10 25	W kW

The DC photoemission electron gun or DC gun built by Cornell University provides the electron beam for LEReC. The electron beam is emitted from the photo-cathode inside the gun via a pulsed laser beam on the photocathode. Components of the DC gun system include:

- Electrical system including a high-voltage power supply system
- High voltage ceramic break assembly
- Cathode electrode assembly and an anode assembly
- Gun vacuum chamber
- Two ASME U-stamped pressure vessels for the high-voltage power supply that are filled with pressurized SF_6 gas
- Remotely controlled vacuum system
- Pulsed laser system
- Cathode puck insertion system.

Figure 4 shows the U-stamped pressure-vessels for the electron-gun system. These vessels were reviewed[2] by the BNL ESH Committee. There are 30 pounds of SF_6/air/nitrogen in each pressure chamber. The pressurized system operates at 73.5 psia and the design pressure of the vessels is 90 psia. Both the gun and power supply pressure chambers meet ASME Pressure Vessel Code Section VIII Division 1 requirements and testing and are U-stamped.

The SF_6 insulating gas is colorless, odorless, and tasteless and has low toxicity. It is chemically inert and non-flammable. When subjected to an electric arc, the gas decomposes into potentially toxic byproducts, such as Sulphur fluorides and metal fluorides. Some SF_6 decomposition products form corrosive and conductive compounds when exposed to moisture. In the presence of moist air, noxious decomposition products have the characteristic odor of rotten eggs. By weight, SF_6 gas is approximately five times heavier than air. SF_6 is a high-impact greenhouse gas and is 22,800[3] times more damaging to the environment than the same amount of CO_2 gas by weight. Additionally, SF_6 lasts about 800 - 3200 years in the atmosphere. For environmental protection purposes, C-AD uses the ALARA principle in order to reduce inadvertent releases from maintenance and operations activities with accelerator components that contain SF_6 (e.g., TVDG, EBIS, etc.). For maintenance of the LEReC gun system, C-AD uses a SF_6 gas service

[2] BNL ESH Committee Meeting minutes 16-05, July 14, 2016.
[3]USEPA, Emissions of Fluorinated Gasses.

cart and storage vessel that can safely remove, transfer or hold 1600 L (maximum) of SF_6 at 750 psia. The LEReC DC electron gun system contains 4400 L (maximum) of SF_6 at 73.5 psia which is about 27% of the cart SF_6 mass.

The power supply for the DC gun can operate to 600 kV and 100 mA, but operates normally at 400 kV. The Gun test will be at no more than 400 kV and 25 kW (62.5 mA).

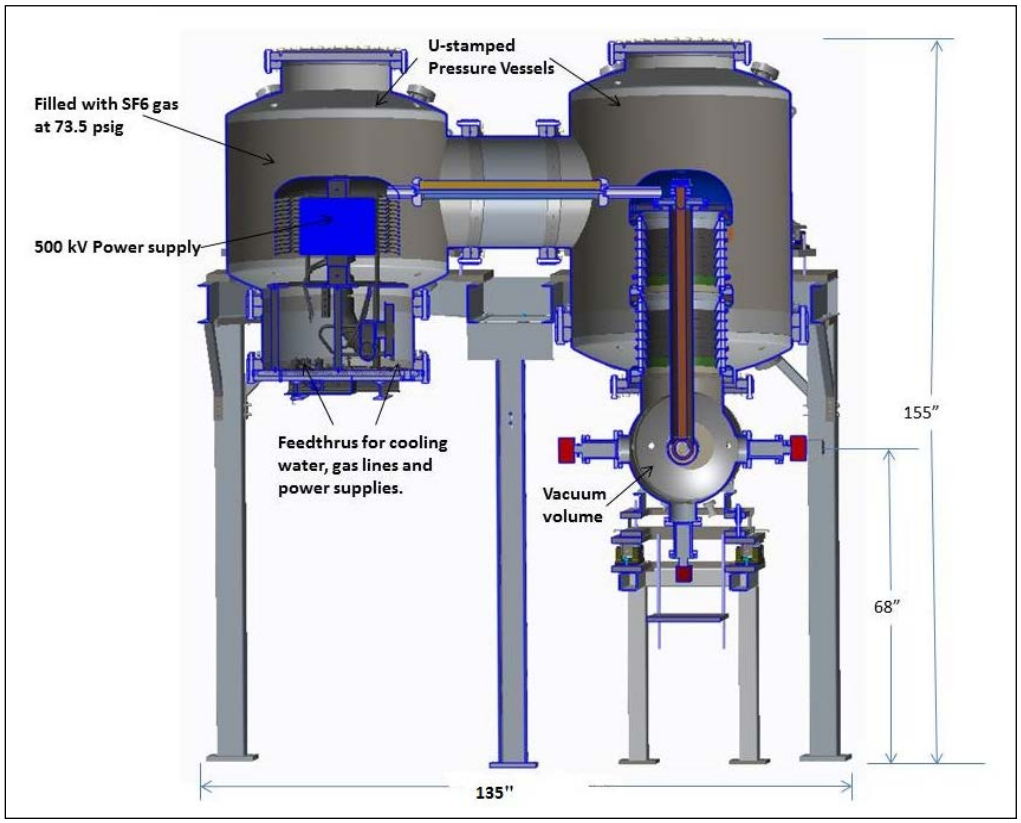

Figure 4. DC Gun Chamber and SF_6 Gas Pressure Chambers

Figure 5 shows the LEReC laser location at IR2. The laser operates from the same laser building (B1002F) that is used for the CeC PoP Experiment laser. The electron beam is generated in the DC gun by illuminating a Na_2KSb photocathode with green (532 nm) light from a laser. The design power of the laser is 120 W (green) and the average power on the cathode is 8.5 W. The laser produces bunch trains with individual electron bunches of about 80 ps full length at a bunch train repetition-frequency of 9 MHz, the same as the RHIC ion bunch repetition-frequency. An optical system allows the creation of dedicated bunch patterns for different RHIC energies and ion bunch lengths. Each bunch train will be followed by a 100 ns long gap corresponding to the gap between ion bunches. As experience is gained, operating as a CW or no gap laser may be done.

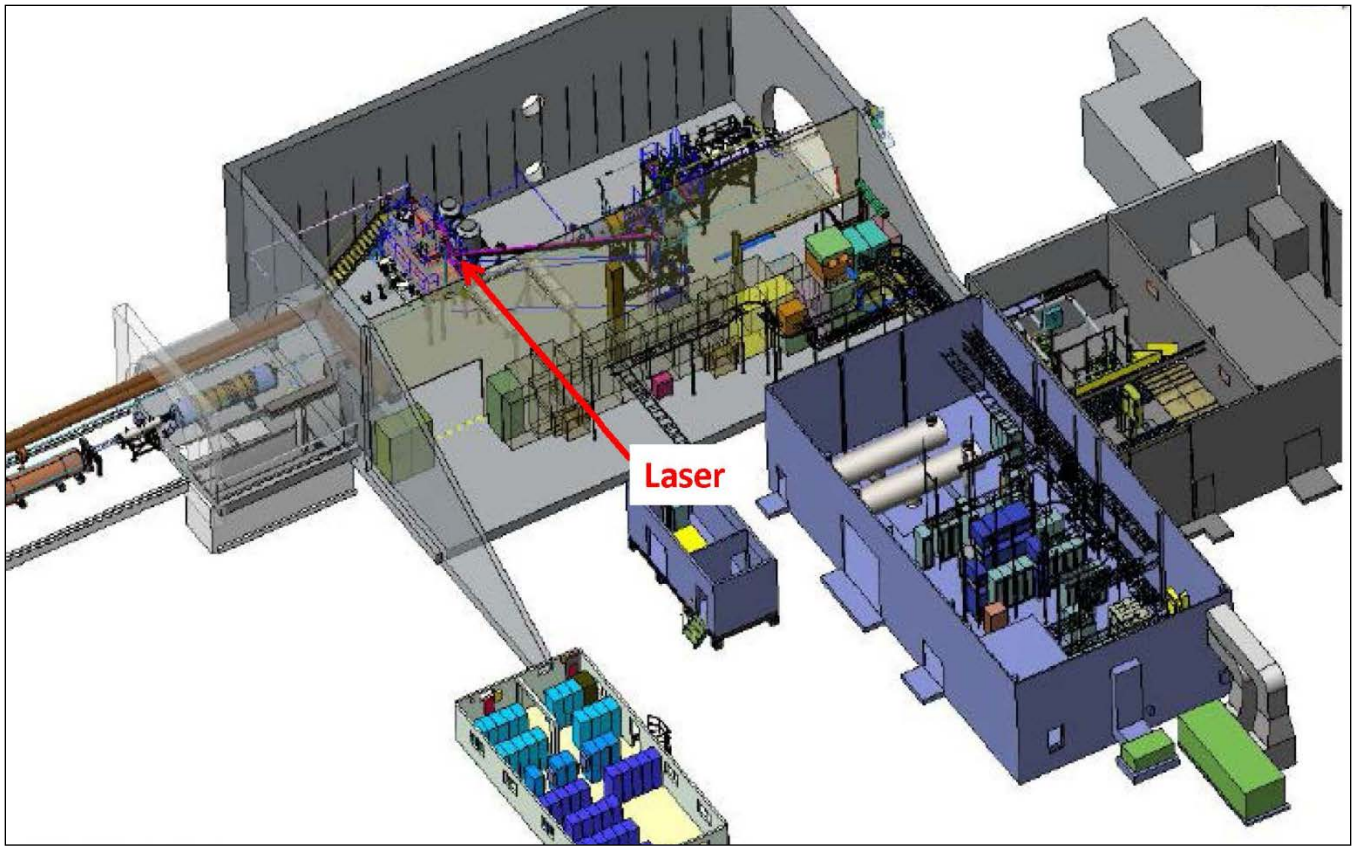

Figure 5: LEReC DC Gun and Laser at IR2 - Also shown are buildings where other equipment for LEReC is located.

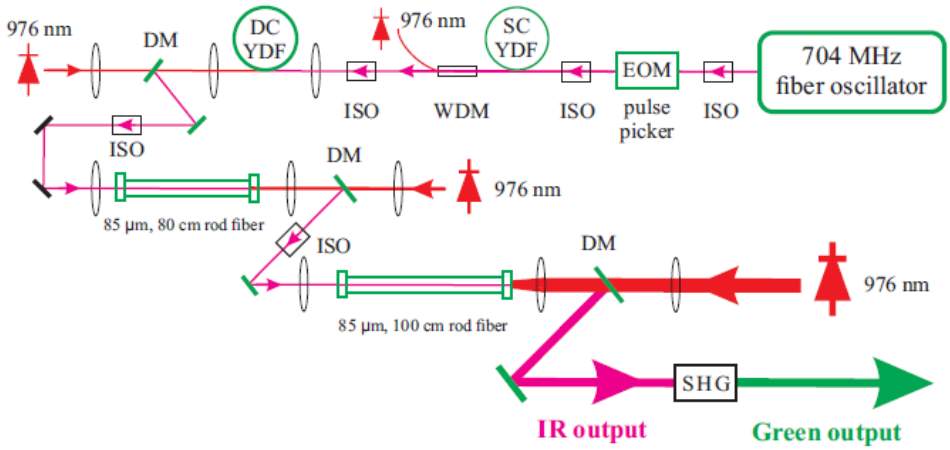

Figure 6: Schematic of the Laser Setup - Abbreviations used are defined as SC, single-clad; DC, double-clad; ISO, optical isolator; DM, dichroic mirror; YDF, Yb-doped fiber; SHG, second harmonic generation.

Table 2: Laser Design Specifications

Parameters	**Values**
infrared (IR) power	160 W
green power	120 W
pulse duration	1.8 ± 0.5 ps
time jitter	< 200 fs RMS [100 Hz-1MHz]
M-squared values	<1.2

Table 3: Laser Design Parameters: Green (~ 520 nm)

Electron beam energy	MeV	1.6	2.6
Gamma	-	4.1	4.9
maximum green laser power	W	120	120
average laser power required (including losses)	W	25.5	25.8
average laser repetition rate	MHz	273.0	275.7
energy/pulse required (including losses)	nJ	93.4	93.6
Required average laser power at cathode (with 1% QE)	W	8.5	8.6
Required pulse energy at cathode (with 1% QE)	nJ	31.1	31.2
peak power 18 psec (FWHM)	kW	5.2	5.2
peak power 80 psec (FWHM)	kW	1.2	1.2

The gun line includes two solenoids, H/V correctors, laser insertion and extraction ports, beam profile monitor (PM), and two beam position monitors (BPM) (see Figure 7).

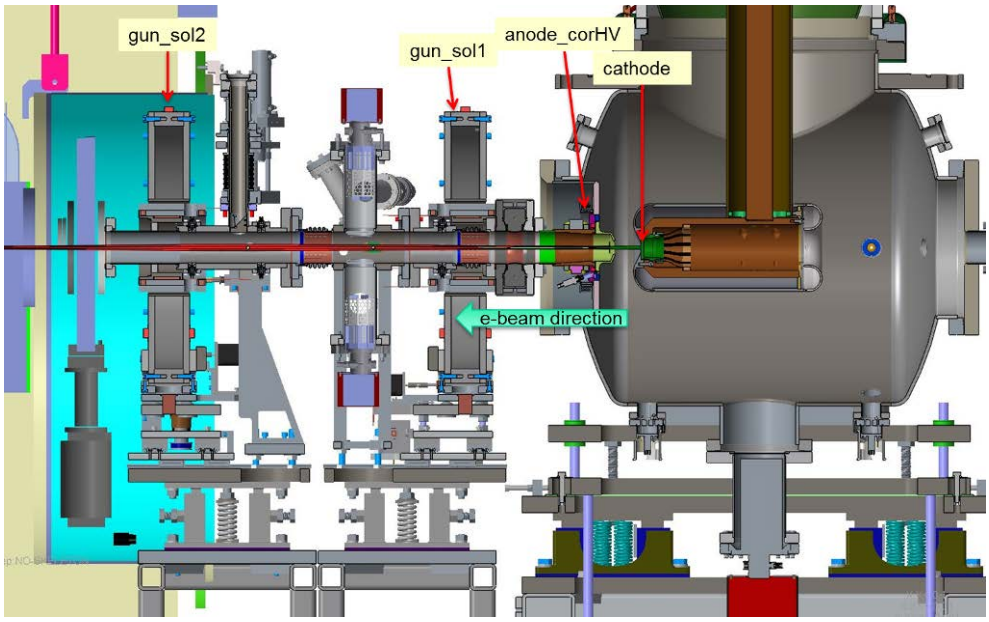

Figure 7: LEReC Gun Area Side View

A description of the layout for the gun test is,

- **Temporary line.** Consist of ERL type solenoid, H/V corrector, beam position monitor (BPM), fast current transformer (FCT)

- **Transport line.** Consist of two ERL type solenoids, two H/V correctors, three BPMs, integrated current transformer (ICT), direct current transformer (DCCT), multi-slits, and PM. Straight ahead line terminated by Faraday cup (FC) at the end. This line could be used for current control and total projected transverse emittance measurements

- **Beam dump extraction line.** Consist of CeC type 45-degrees chevron dipole, 2 ERL type quadrupoles with trims (one horizontal, one vertical correction), BPM, PM, 2D halo monitor, and fast current transformer (FCT). Terminated by CeC type beam dump serves as a Faraday cup. This line will be used for beam energy and energy spread measurements, transvers and longitudinal halo studies

The Beam Dump is cooled from top and bottom by water circulation (Figure 8). The sides are cooled only due to copper thermo-conductivity. For optimum cooling, the electron beam will be spread more in vertical direction. The beam profile monitor is used to match the electron beam with the aperture of the beam dump. At high beam power a BPM will provide an interlock if the beam trajectory is out of a predefined range of offsets. A second protection method uses four sets of slightly inserted halo monitors. These monitors measure very small current deposition on any of the four beam dump jaws in order to detect any beam profile changes.

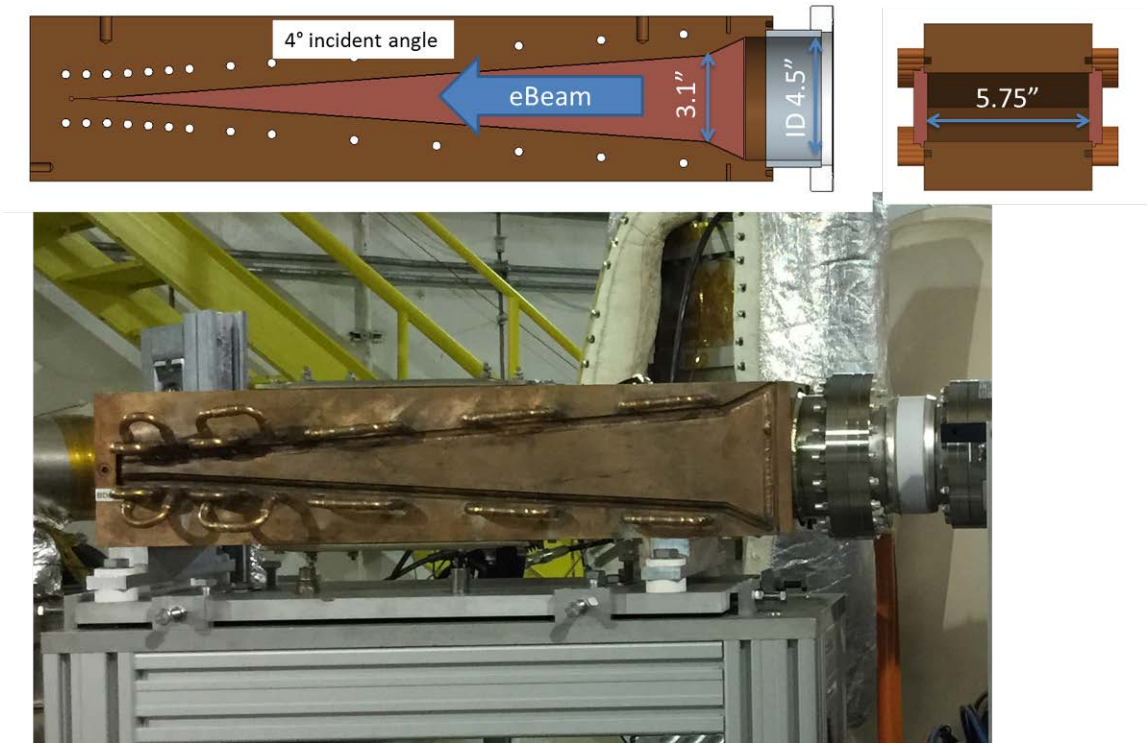

Figure 8: Beam Dump Geometry

Energy of the electrons leaving the gun is 400 keV. A residual field, in order to obtain 0.5 Gauss (Earth’s magnetic field) in 1 m will bend the beam to 20 mrad. The beam shift could be in order to 1 cm. After 2 m of drift space, the beam will be lost due aperture of vacuum chamber. The magnetic shielding is required in any drift spaces where this is possible. The plan is to have 2-3 layers of μ-metal foil wrapped around the vacuum chamber.

Conduct of Operations

The operating organization for the LEReC Gun test is described in C-AD OPM Chapter 24 and summarized in Figure 9. Specific written procedures for the LEReC Gun accelerator and experimental operations are found in OPM Chapter 24. Other chapters of the C-AD OPM address issues that apply to all of C-AD facilities (e.g., organizational roles, responsibilities, authority, accountability, notifications to management). These procedures and LEReC specific Work Plans state the goals for the gun test and safety, the means to achieve both, and the controls instituted.

Specific operations procedures and specific Work Plans for the LEReC Gun test address

- organization, responsibilities and authorities including LEReC manning requirements (OPM 24.2.1)
- operation of the IR2 access controls system and sweeping the inside of the facility (OPMs 24.5 and 24.8 Series)
- safe operating limits (OPM 2.5 Series)
- Control and status of equipment (Work Plan)

C-AD OPM operations procedures address

- C-AD policies for organization and administration (C-A-OPM Chapters 1and 2)
- C-AD operating practices, e.g., emergency response, work controls (C-A-OPM Chapters 2 and 3)
- Communications and notifications (C-A-OPM Chapter 1)
- Training and qualification of C-AD and LEReC staff (C-A-OPM Chapter 2)
- Investigation of abnormal events, conditions and trends (C-A-OPM Chapters 1and 10)
- Lockout and tagout of hazardous energy (C-A-OPM Series 2.36)
- PASS Operations (C-A OPM 4.44)
- Independent verification / assurance practices (C-A-OPM Chapters 9 and 13)
- Operations practices for log-keeping (C-A-OPM Chapter 2)
- Component labeling/identification practices (C-A-OPM Chapter 1)
- Safety committee reviews (C-A-OPM Chapter 9)

Responsibility for the safe and reliable operation of the LEReC during Gun testing resides with the MCR Operations Coordinator (OC) during RHIC running periods (see Figure 9) or with the LEReC Operations Specialist with RHIC off (see Figure 10). In both cases the LEReC Operations Specialist is in charge of the successful day-to-day operation of the system and oversees the efforts of the MCR Operator and LEReC Shift Leader. In addition they:

(a) Provide guidance on day-to-day management of program goals provided by the LEReC Project Head and LEReC Liaison Physicist,
(b) Are responsible for configuration management, providing technical advice, coordination, and work control,
(c) Maintain knowledge of programmatic goals and ensures day-to-day efforts move toward those goals,
(d) Are responsible for the training of the LEReC operations team,
(e) Coordinates operation of the LEReC with the MCR OC to keep the OC informed, and
(f) Obtains resources for the testing of the gun.

When the RHIC complex is in operation, the MCR is staffed and the MCR Operations Coordinator has overall responsibility for the safety of the C-AD complex. This is the configuration that is expected to prevail during the gun testing phase of the project: The RHIC will be in operation, the MCR will be staffed, and the MCR Operations Coordinator is in charge of the complex (Figure 9).

Any change that modifies radiation shielding or that could introduce increased radiation dose, increased oxygen deficiency hazard or new hazards is reviewed and controlled by BNL and C-AD requirements and procedures.

Radiation posting and personal dosimetry requirements are set by the C-AD Radiological Controls Group based upon dose rate measurements.

Figure 9
LEReC Operating Organization
(RHIC Running)

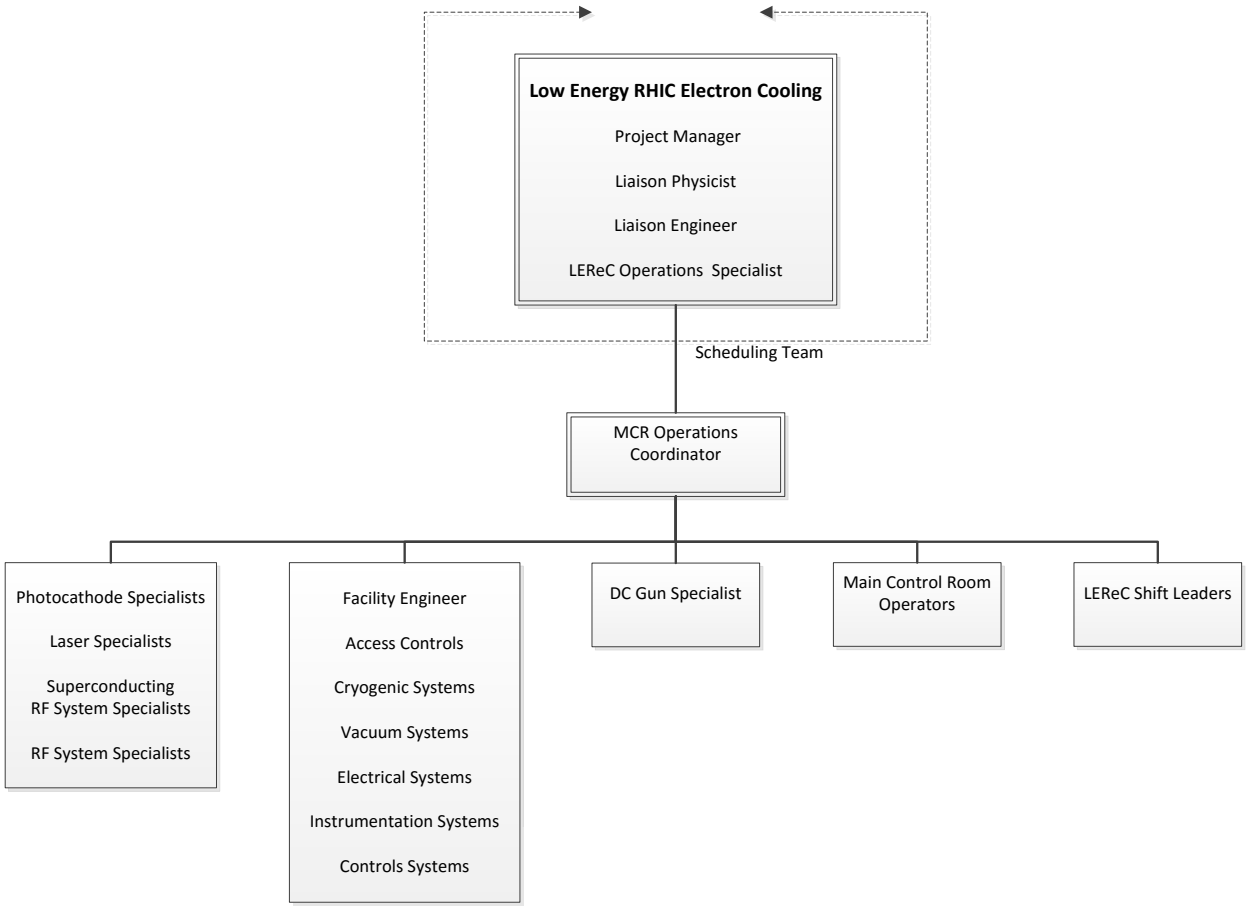

Figure 10
LEReC Operating Organization
(RHIC Off)

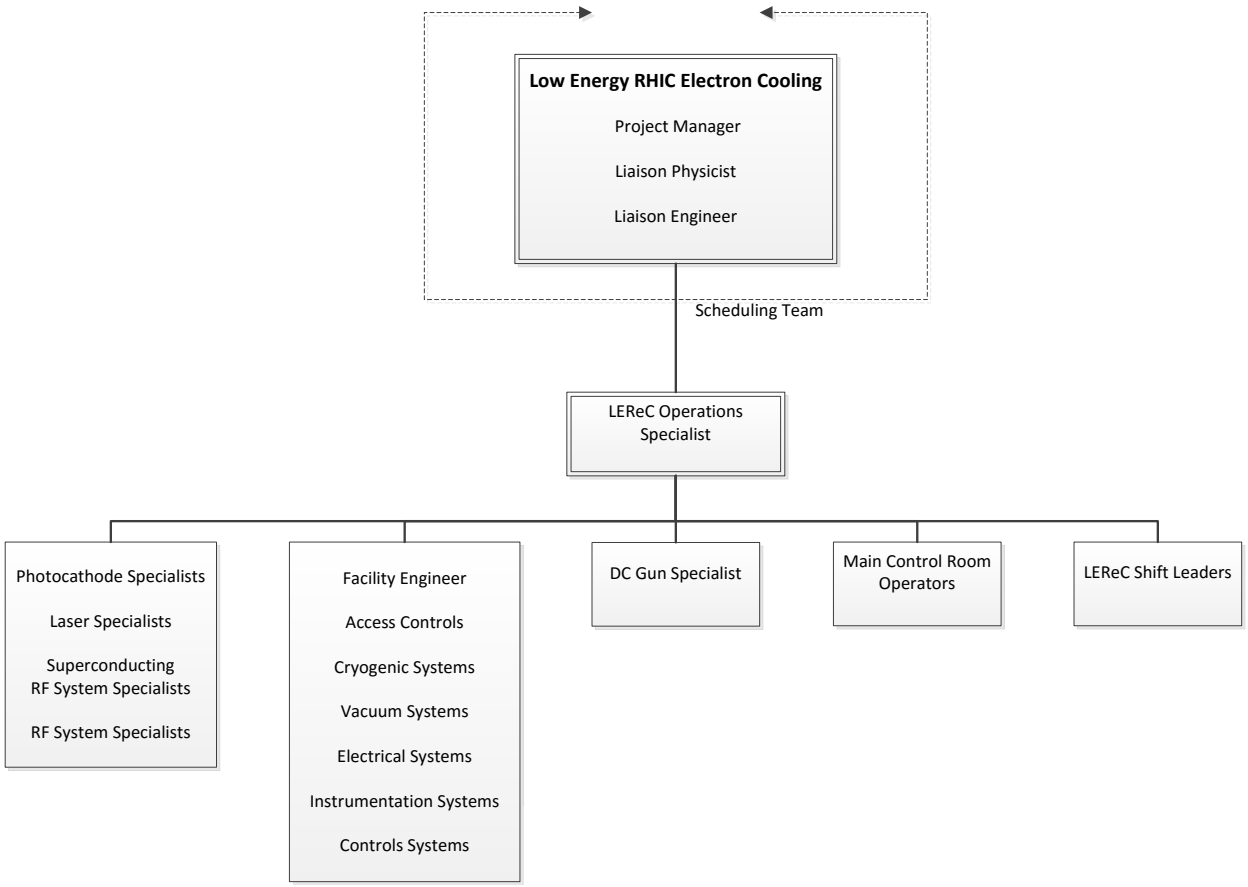

Layout and Equipment Overview

DC Gun Test (25 kW, maximum) Operation Parameters

- Operating Voltage: 400 kV
- Electron beam generation:
  - Charge per bunch: 100 pC.
  - Maximum Beam Current: 62.5 mA
- RMS normalized emittance: < 2 mm mrad
- RMS energy spread: < 2e-4
- Maximum Laser power deposited on the cathode: ~10W on an area of 3 mm dia. area.
- Weight of vacuum chamber: ~500 lbs, Weight of pressure vessels: ~3000 lbs/ea.
- SF6 vessel service conditions:
- Operating temperature: 20 ^{o}C (Room temperature)
- Operating pressure in the pressure vessels: 73.5 psia.
- Service fluid: SF6 gas, Nitrogen and air

- Relief valve (ASME BPVC UV stamped) will be set at 80 psia, which is mounted on top of the Power Supply Pressure Chamber.
- Ceramic insulator voltage rating: 750 kV

The LEReC will use the same interlock zone as the CeC PoP Experiment. The installation of LEReC interlocks will occur in the same access control PLCs that presently provide protection from RHIC and CeC PoP hazards. The LEReC interlocks undergo the same level of documentation, testing and review that other C-AD access control systems undergo.

Following the Gun Test and after the 704-SRF booster cavity is installed, the maximum LEReC beam energy will be 2.6 MeV. It may be possible to get 0.1 MeV additional beam energy from the warm gun. The 704 MHz Cu-cavity in the tunnel may be able to boost the beam an additional amount of about 0.4 MeV. Even at these higher energies, the electron energy is too low to create activation products. This means that soil, air and water activation are not an issue

Laser Systems

Lasers are used to illuminate the Gun cathode and produce electron beams. The laser design, interlocks, operations and maintenance would always comply with all BNL SBMS laser safety requirements. A laser SOP is written with controls described in detail which is approved by the BNL Laser Safety Officer. The laser interlock system is the same system that has been successfully used and tested for the Coherent Electron Cooling (CeC) laser system installed in early 2016.

The engineered controls for these lasers consist of a commercial interlock system to exclude personnel exposure to laser hazards. Failsafe operation, reset after violation, reach-back upon laser shutter failure, and provision for trained personnel to re-enter the area are incorporated into the design. Dedicated safety shutters are used to remove the hazard when required, and also close upon loss of power or control signal.

During laser commissioning, a large number of optical elements require repositioning and precision alignment. During this period, laser energy is reduced well below normal operational limits to the minimal level necessary for determining beam position and component placement.

Maintenance is limited to replacement and realignment of individual passive optical elements as necessary to provide optimal beam quality. Outside service personnel are always continuously escorted and supervised by C-AD staff during any system maintenance or repair work. Certification of training to vendor laser safety program requirements is obtained for every individual performing service.

Alignment procedures are limited to beam steering through existing optical path, adjustment of transmissive optics such as polarizers/wave plates, and optical path length adjustment of optical delay lines.

Configuration changes occur infrequently and are detailed in system documentation used for operator training. Significant changes require formal operator retraining.

Most laser related accidents occur during alignment. Extra care is taken during alignment. Eyewear is worn during alignment but eyewear is NOT the first level of laser safety. Eyewear protects the wearer only when all other safety procedures and equipment have failed. Primary protection is provided by engineering controls and carefully written and approved procedures and by proper laser beam management.

Power and Electrical Supplies

Power and electrical distribution comply with the NEC and are operated in compliance with NFPA 70E, BNL and C-AD requirements. These hazards are not unique and have the same or less risk as present at other C-AD facilities.

Access Controls System

The installed IR2 access control system has safely operated for the last 16 years. This is a PLC system that protects personnel from exposure to electron gun routine and faulted beam loss. It is a dual interlock system and complies with the design and testing requirements in the BNL Radiological Controls Manual and the BNL SBMS subject area, Interlock Safety. This system is maintained and tested by the C-AD Access Controls Group. Only trained and approved personnel may conduct sweeps of the IR2 enclosure before gun testing.

Section 2: Summary/Conclusions

The LEReC Gun is a minimum risk accelerator with a single extractible electron beam which stays in IR2, with an approved radiation shield configuration with an Access Controls entry into IR2. It is a non-complex electron accelerator that is run by trained staff and maintained by the same staff that services the other C-AD accelerators and equipment.

Only local safety impacts are possible, with no life-threatening consequences. Radiation hazards are safely controlled by compliance with the BNL Radiation Controls Manual requirements. Conventional hazards are safely controlled by compliance with 10CFR851 requirements. All activities are safely controlled by following BNL SBMS and C-AD OPM procedures.

Section 3: Details of the Safety Analysis

This section describes the hazard identification and qualitative hazard analysis for the LEReC Gun accelerator in RHIC IR2. The hazard identification process examined the LEReC Gun processes, operations and maintenance that could result in a source of danger with the potential to cause illness, injury or death, damage to operations or environmental damage. The LEReC Gun design documentation, BNL conventional and radiological safety requirements, facility walk downs, C-AD Operating and Emergency Procedures, and discussions with engineering and LEReC Gun staff and safety professionals were utilized to conduct the detailed hazard identification and hazard analysis.

A review of all safety- and health-issues related to the LEReC resulted in the need for further safety analyses of 1) radiation from Gun or electron beam, and 2) hazards from the use of SF_6 insulating gas.

Standard industrial activities encompass pressure and vacuum, use of small quantities of flammable/inert fluids, electrical, noise, hoisting/rigging, lasers, and magnetic fields. The C-AD controls these risks by complying with the consensus standards and codes, SBMS's Subject Areas, and the C-AD Operations Procedure Manual (OPM). When required, these hazards undergo review by the appropriate BNL or C-AD committee, or by the C-AD's A&R Division specialists during work planning.

Safety Analysis of Non-Standard Industrial Hazards

Ionizing Radiation

The LEReC Gun test beam energy is too low (<3 MeV) to create activation products. Thus soil, air, water and equipment activation are not possible. The gun is not superconducting and voltages are low so that x-ray production is low during conditioning. The IR2 Access Controls prevent IR2 entry during conditioning and during beam operation.

For shielding evaluation, the LEReC Gun test radiation safety analysis assumes a beam power limit of 25 kW[4]. This is a source term that is only ~56% of the CeCPoP source term. Thus the IR2 shielding is more than adequate for LEReC Gun testing[5]. Areas outside IR2 will be posted a Controlled Area with no TLD requirement. There are no off-site radiological hazards due to general area dose rates or air and liquid emissions from LEReC Gun testing.

Each of the LEReC beam dumps have been reviewed for shields[6]. These three dumps are the End Dump, Diagnostic Dump and the Gun Diagnostic Dump. This analysis includes the dump used for Gun testing. The Gun Diagnostic Beam Dump will produce ~3 mrad/h on the outside surface of the IR2 roof shield assuming 25 kW, 2.6 MeV beam. Dose at the outside surface of the side-walls is less because the side-walls are thicker than the roof. IR2 penetrations have been evaluated and shown not to be a radiation hazard.

Evaluating the routine and faulted dose rates for both the bulk shielding and all shield penetrations cracks is scheduled by radiation surveys when Gun testing begins. The C-AD Radiation Safety Committee (RSC) will review of the measured routine and faulted dose rates. This committee is composed of C-AD and BNL experts in radiation safety. The RSC procedures are contained in C-AD OPM Section 9.1 series.

A conservative assumption of full electron beam lost near the 2GE1 gate at IR2 shows that the dose rate at the gate would be <5 mR/h[7] with beam power at 25 kW. There is a Chipmunk located at this labyrinth to warn of this fault.

[4] The beam dump has only been analyzed at 10 kW. This power is a machine protection limit.
[5] D. Beavis, LEReC and the ASO, April 22, 2016. This assumed a limit of 10 kW.
[6] D. Beavis, Guidance for LEReC Beam Dump Shields, May 23, 2016
[7] D. Beavis, External Dose Rates for LEReC Gun Test, August 18, 2016 and Table 3 first column of D. Beavis, Penetration Dose rates due to LEReC and Other Changes at IR2, August 26, 2016.

Oxygen Deficiency

LEReC Gun testing uses no superconducting components, thus there is no oxygen deficiency hazard.

Use of SF_6 insulating gas for LEReC was examined. If all of the SF_6 were released to IR2 and mixed with the IR2 volume, the oxygen concentration change would be insignificant. SF_6 gas is about 5 times the density of air. If the heavy SF_6 accumulated on the IR2 floor, the gas would be <3 inches deep. Thus SF_6 is not an ODH hazard[8].

Hydrogen and Ozone[9]

Analysis has determined that at 25 kW the hydrogen generation from beam dump operation would only be ~50 cc/h, which is not a hazard. Ozone is found to be approximately equal to the ACGIH TLV value at beam shut down using a conservative analysis at 25 kW power. This value decreases over time because of ozone decomposition[10] and natural ventilation thus there is no ozone hazard.

Section 4: Controls and Bases:

To test the LEReC, C-AD management will adhere to an approved LEReC Gun Test Controls and Supports (OPM 2.5.6.5).

In OPM 2.5.6.5, C-AD defines a set of limits for the test in Section 2:

- Electron kinetic energy shall be limited to 400 keV
- The electron beam power shall be limited to 25 kW averaged over 1 hour

Section 5: Administrative Controls

1. Before beam or other radiation producing operations (e.g. RF testing), the LEReC Project Physicist must verify that all shielding (e.g. shield blocks in or around penetrations, etc.) is properly in place and configuration controlled.

2. The Access Controls Group Leader must ensure that the relevant Access Controls System (ACS) configuration control and maintenance is in accordance with C-A OPM 4.91. This means that relevant portions of the ACS must be functional if they are preventing exposure to LEReC beam radiation or RF generated x-rays, and the ACS must remove beam or x-ray generation when excessive beam loss occurs or excessive x-rays are produced.

3. The C-AD Department Chair must approve the start of LEReC Gun testing with beam.

Section 6: Assurance Methods for Operations

[8] BNL LESHC Meeting 16-05 on July 14, 2016
[9] D. Beavis, Guidance for LEReC Beam Dump Shields, May 23, 2016. See pages 7 and 8.
[10] From Technical Report No. 188, Radiological Safety Aspects of the Operation of Electron Linear Accelerators, IAEA 1979, Section 2.10.1, the ozone decomposition time is 50 minutes.

1. The existing RHIC enclosure radiation shielding will be used.
2. Before initial LEReC gun testing with beam, the Gun system will be reviewed by the ASSRC, RSC and BNL LESHC and all prestart items completed. (Note: LESHC review was completed July 14, 2016, see LESHC Meeting Minutes 16-05)
3. The LEReC Project Physicist and engineered-safety-system owners shall sign a LEReC Gun Test Radiation Safety Committee Check-off list prior to enabling electron beam.

4. The LEReC Project Physicist shall be required to be present during any period of testing with electron beam.

5. Radiation surveys shall be performed, as defined by the Radiation Safety Committee (RSC), for the testing configurations.

6. The LEReC Project Physicist shall re-sign the RSC checklist if more than seven days elapsed between sequential Gun tests after checking that other signatures on list remain valid

7. The IP2 experimental area shall be subject to the C-AD RHIC sweep search procedures, and equipment operation will be subject to the relevant RHIC PASS interlocks during LEReC Gun testing

Acronyms

ACS – Access Control System
ACGIH – American Conference of Governmental Industrial Hygienists
ALD – Associate or Assistant Laboratory Director
ASME - American Society of Mechanical Engineers
ASSRC – Accelerator Systems Safety Review Committee
BNL – Brookhaven National Laboratory
C-AD – Collider-Accelerator Department
CeC – Coherent Electron Cooling
CFR – Code of Federal Regulations
ESH – Environment, Safety and Health
ESSHQ – Environment, Safety, Security, Health and Quality
IR – Intersecting Region in RHIC
LEReC – Low Energy RHIC Electron Cooling
LHe – Liquid Helium
LP – Liaison Physicist
MCR – Main Control Room in B911
NEC – National Electrical Code
NFPA – National Fire Protection Association
NPP – Nuclear Particle Physics
OC – Operations Coordinator
ODH – Oxygen Deficiency Hazard
OPM – Operating Procedures Manual
PASS – Particle Accelerator Safety System
QA – Quality Assurance
RF – Radio Frequency
RSC – Radiation Safety Committee
SBMS – Standards Based Management System
SC – Superconducting
SME – Subject Matter Expert
SRF – Superconducting Radio Frequency
TLV – Threshold Limit Value
USI – Unreviewed Safety Issue