Thorium Target, Bolted Cu Holder Thermal Analysis

Chris Cullen

February 18, 2015,

May 29, 2015 for Rev B

Basket Assembly

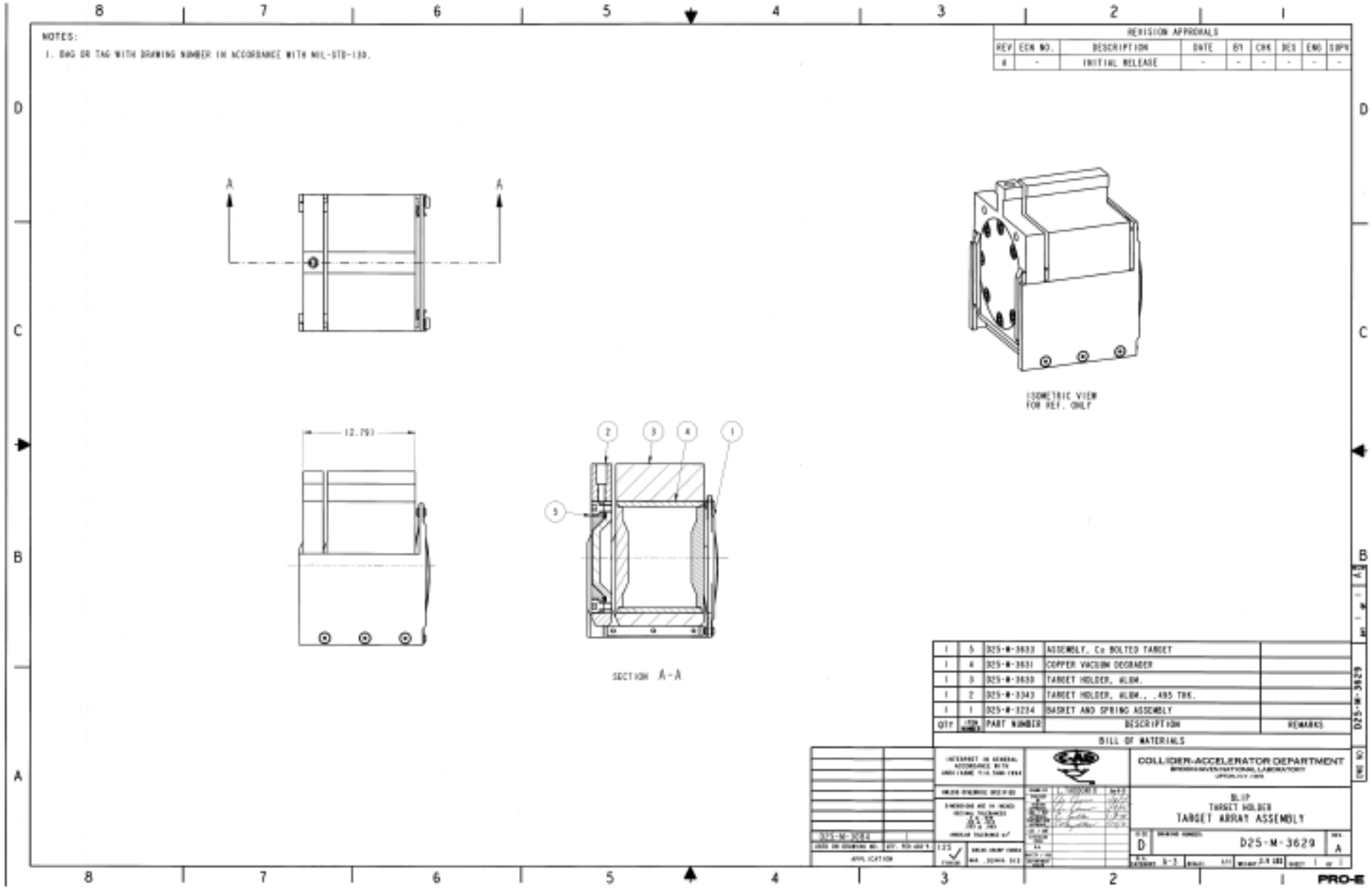

Box, Basket and Five Legacy Targets

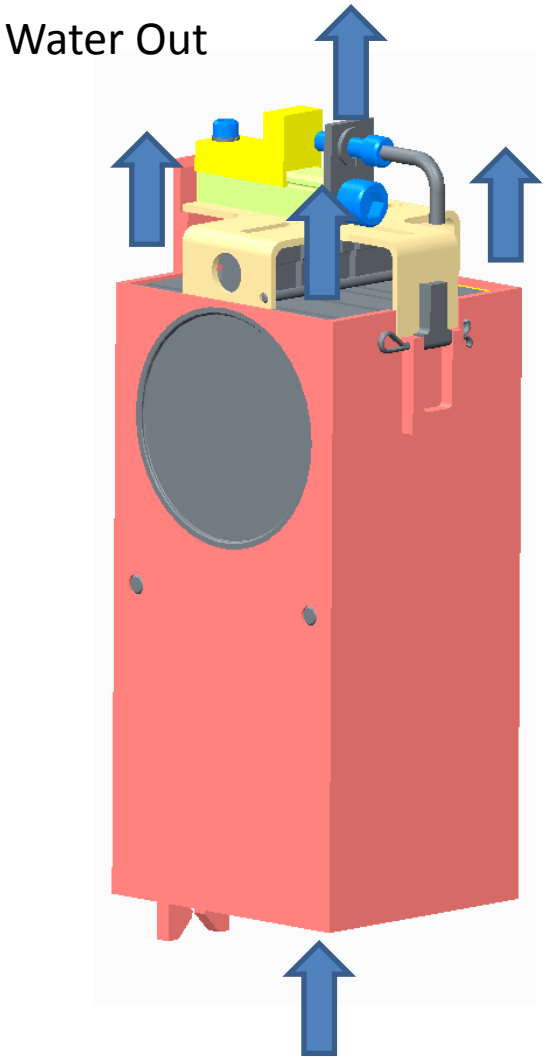

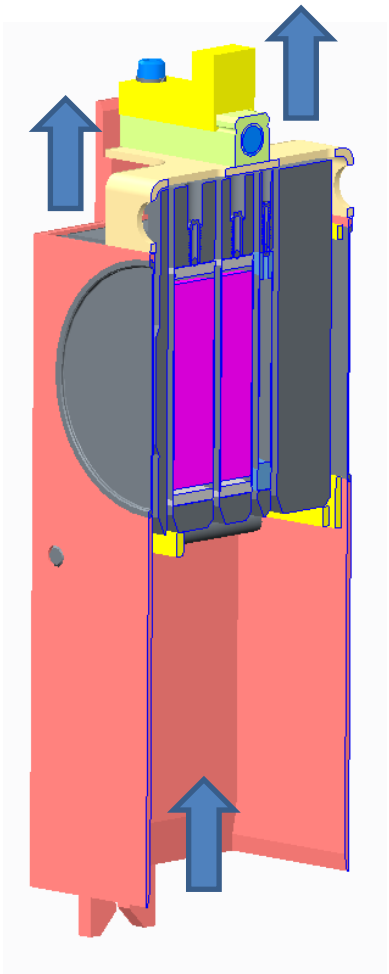

Commercial in Confidence

Conditions

- Instantaneous Current = 40.0 mA
- Steady state average current = 113 μA
- Pulse width = .000425 sec
- Pulse Frequency = 6.667 Hz
- 200 MeV
- 1591 Watts
- 2 targets, (3) .10” water gaps
- Gaussian Beam Distribution
  - FWHM=16 mm
  - FWTM=42 mm

Finite Element Model

- 2D Axi-symmetric model
- Copper target holder
- (3) x .005” thick Thorium foil
- (1) .0005” Aluminum foil on *each face* of Thorium foil (6 total)
- (1) x .005” Aluminum imaging foil
- Steady-state analysis
- Thermal contact conductance between each layer=2,200 $W/m^2*°C$
- Steady state water cooling on upstream exterior=24,380 $W/m^2*°C$
- Steady state water cooling on downstream exterior=10,000 $W/m^2*°C$
- Gaussian Internal heat generation for all bodies

Finite Element Model

Geometry

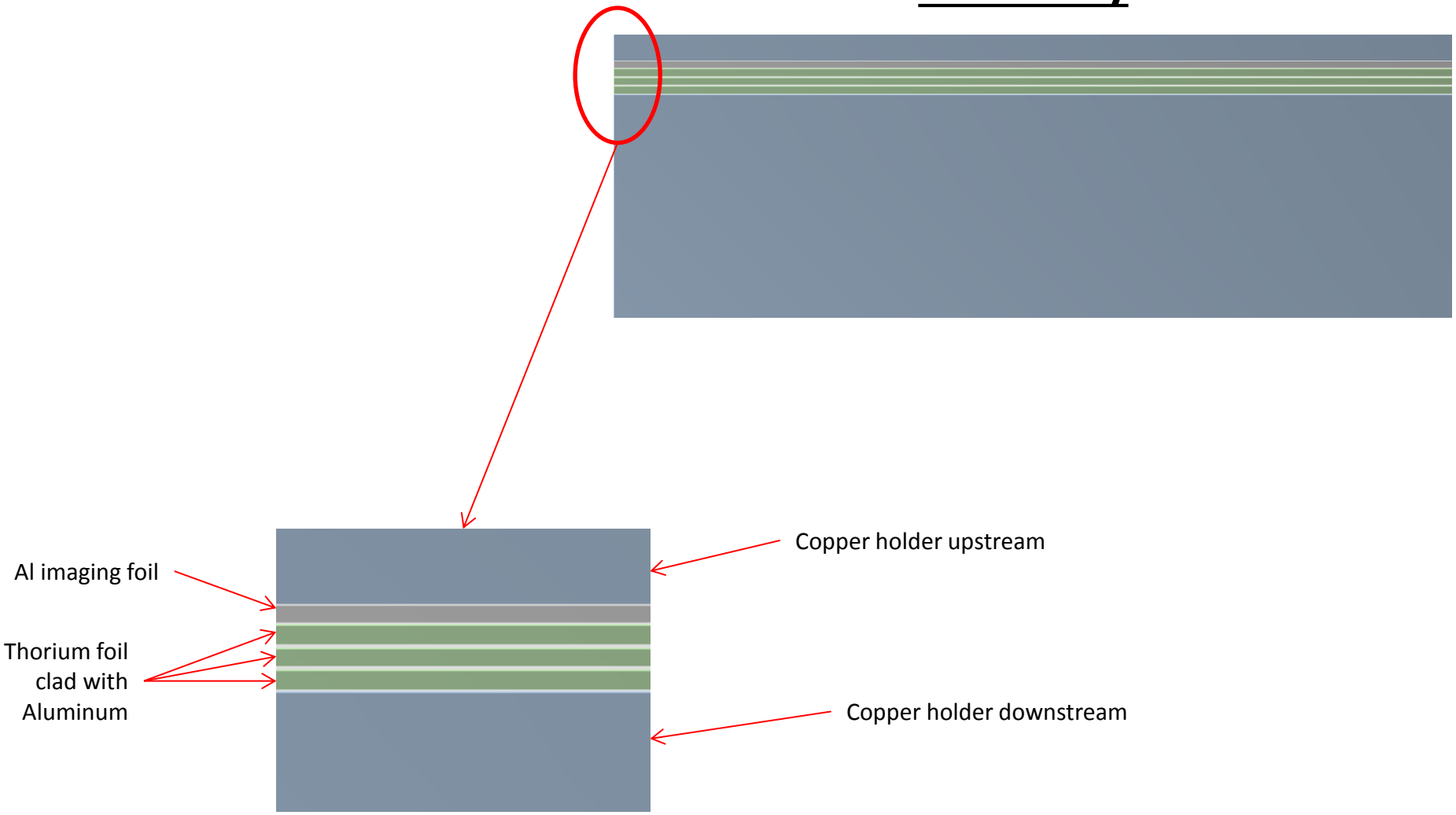

Finite Element Model Mesh

Geometry

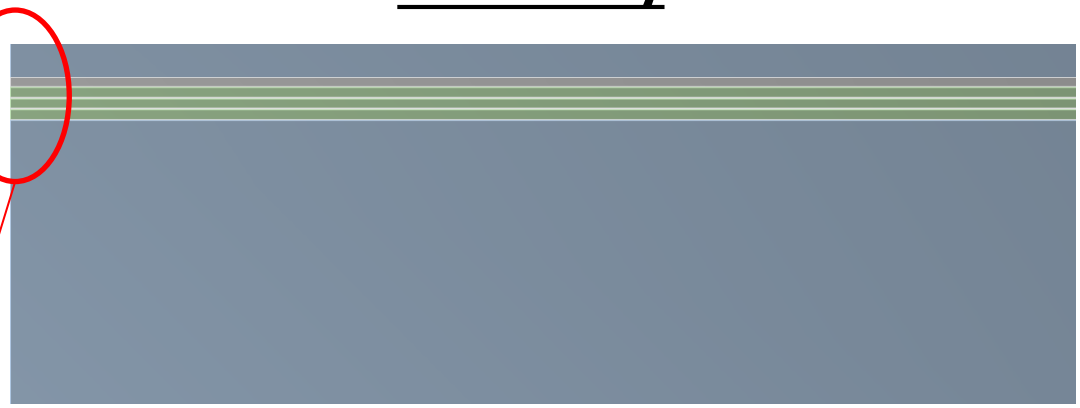

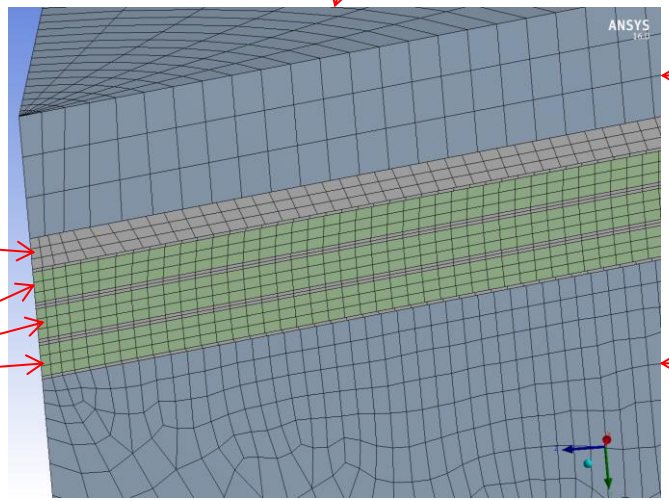

Copper holder upstream

Al imaging foil

Thorium foil clad with Aluminum

Copper holder downstream

Target Temperature Profile, 3D Representation

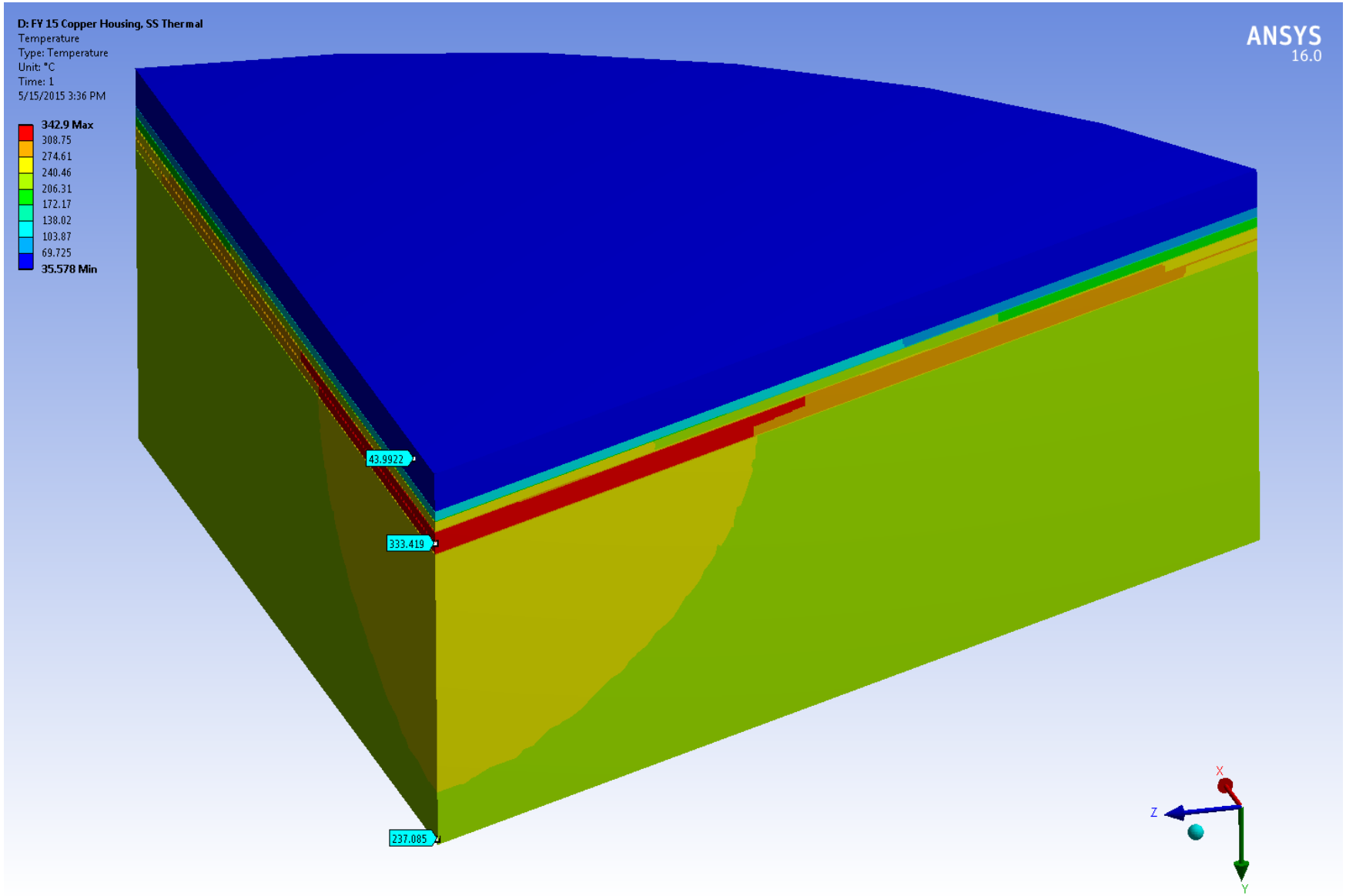

Target Temperature Profile

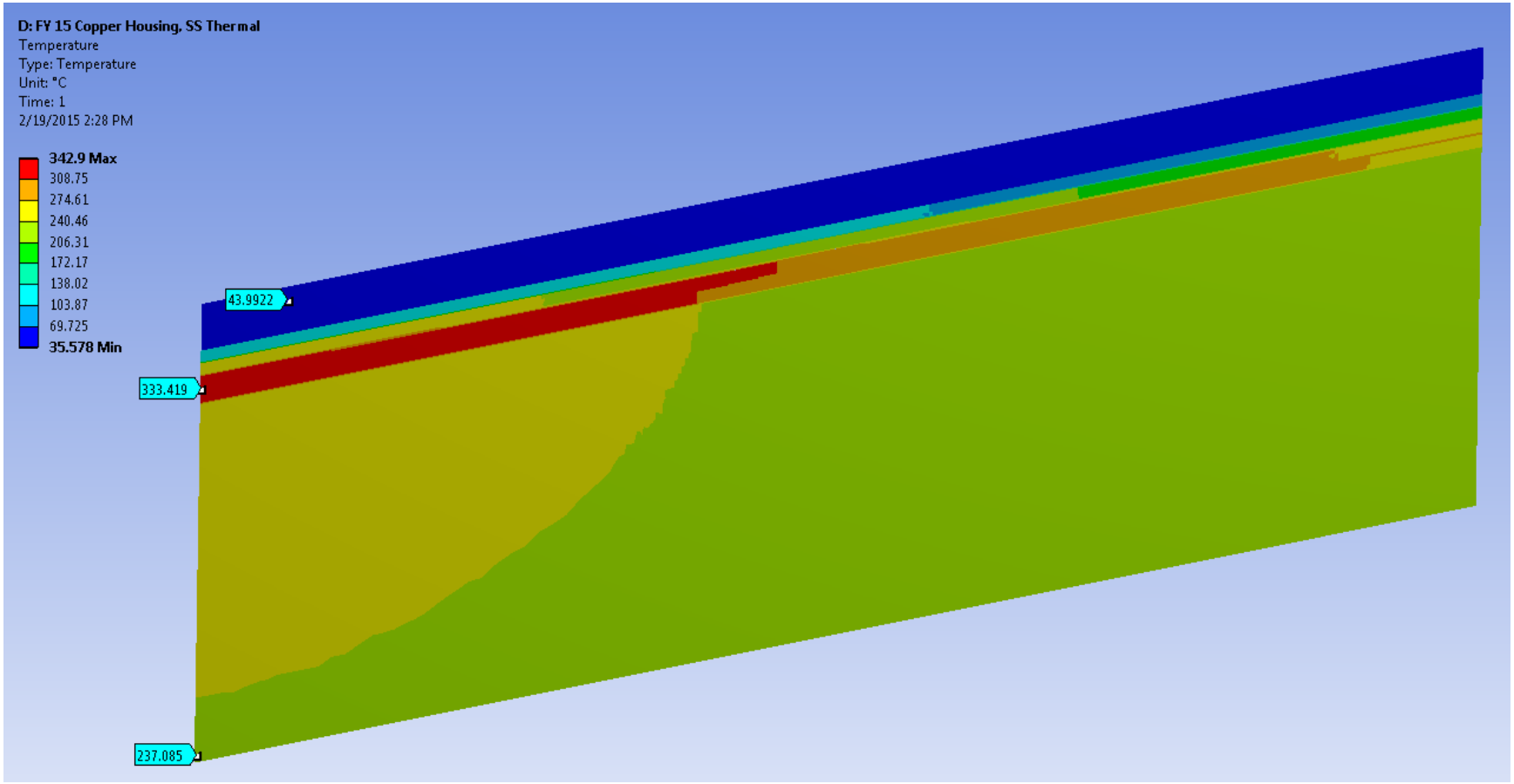

Summary & Conclusion

- Maximum Aluminum temperature = 337 °C
- Aluminum melting temperature = 660 °C
- SAFE
- Maximum Thorium temperature = 343 °C
- Thorium melting temperature = 1755 °C
- SAFE
- Maximum Copper temperature = 249 °C
- Copper melting temperature = 1085 °C
- SAFE

Reference Slides

- Files
  - D:\Jobs - Active\BLIP\Target Analyses\FY 14 Thorium Holder\FY15_array_Th_200 MeV_small_Cu target_CU deg.xlsx
  - D:\Jobs - Active\BLIP\Target Analyses\FY 14 Thorium Holder\Large dia Th holder.wbpj

Energy Deposition by Layer

A	B	C	D	E	F	G	H	I	J	K	L	M
	Layer	Material	density	inches	mm	Ei	Eout	dE (MeV)	avg beam current (μA)	HGEN (W)	Scale	
1	Be window	Berillium	1.85	0.012	0.3048	199.05	198.84	0.21	113			
2	AlBeMet window	AlBeMet	2.10	0.01	0.3048	198.84	198.61	0.24				
3	Beamline window	stainless steel	8.00	0.031	0.7874	198.61	196.62	1.99				
4	water gap	water	1.00	0.106	2.6924	196.62	195.49	1.13				
5	box window	stainless steel	8.00	0.020	0.5080	195.49	194.19	1.29				
6	water gap	water	1.00	0.100	2.5400	194.19	193.01	1.18				
7	Th can window	Cu	8.96	0.020	0.5080	193.01	191.57	1.45		163.6	1,018,122	
8	Al monitor foil	Al	2.70	0.005	0.1270	191.57	191.44	0.12		14.09	350,913	
9	Aluminum wrap	Al	2.70	0.0005	0.0127	191.44	191.43	0.01		1.41	350,998	
10	Th foil	Th	11.70	0.005	0.1245	191.43	191.09	0.34		38.0	946,072	
11	Aluminum wrap	Al	2.70	0.0005	0.0127	191.09	191.08	0.01		1.41	350,998	
12	Aluminum wrap	Al	2.70	0.0005	0.0127	191.08	191.07	0.01		1.41	350,998	
13	Th foil	Th	11.70	0.005	0.1245	191.07	190.73	0.34		38.0	946,072	
14	Aluminum wrap	Al	2.70	0.0005	0.0127	190.73	190.72	0.01		1.41	350,998	
15	Aluminum wrap	Al	2.70	0.0005	0.0127	190.72	190.71	0.01		1.41	350,998	
16	Th foil	Th	11.70	0.005	0.1245	190.71	190.37	0.34		38.1	948,562	
17	Aluminum wrap	Al	2.70	0.0005	0.0127	190.37	190.36	0.01		1.41	350,998	Sum
18	Th can well bottom	Cu	8.96	0.154	3.9174	190.36	178.93	11.43		1291.2	1,048,160	1591.42
19	water outside well	water	1.00	0.298	7.5692	178.93	175.21	3.72				
20	cooling channel	water	1.00	0.100	2.5400	175.21	173.94	1.26				
21	Cu degrader	Cu	8.96	0.303	7.6995	173.94	144.81	29.14				
22	vacuum box							0.00				
23	Cu degrader	Cu	8.96	0.303	7.6995	144.81	122.48	22.32				
24	water end of the box	water	1.00	0.341	8.6650	122.48	116.89	5.59				
25	Front box back window	stainless steel	8.00	0.020	0.5080	116.89	115.06	1.83				

Reaction Probe Results, 1597 W Total

Downstream Face, 1339 Watts

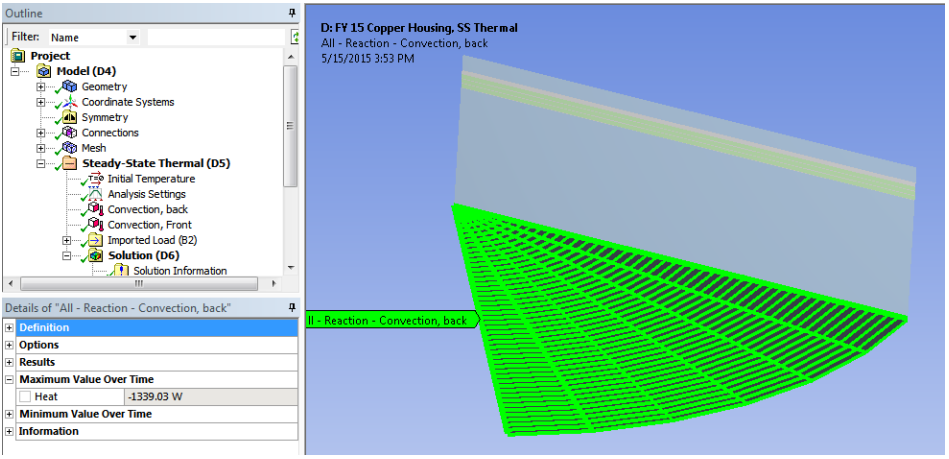

Upstream Face, 258 Watts

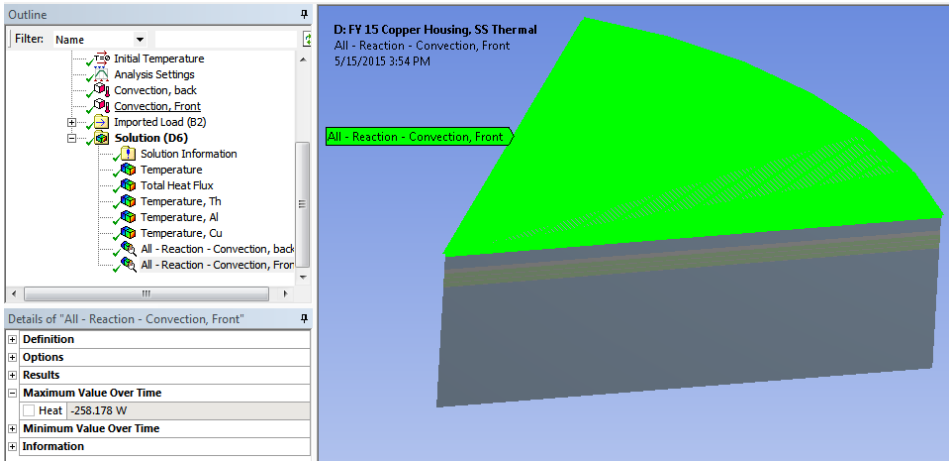

Thermal Conductance

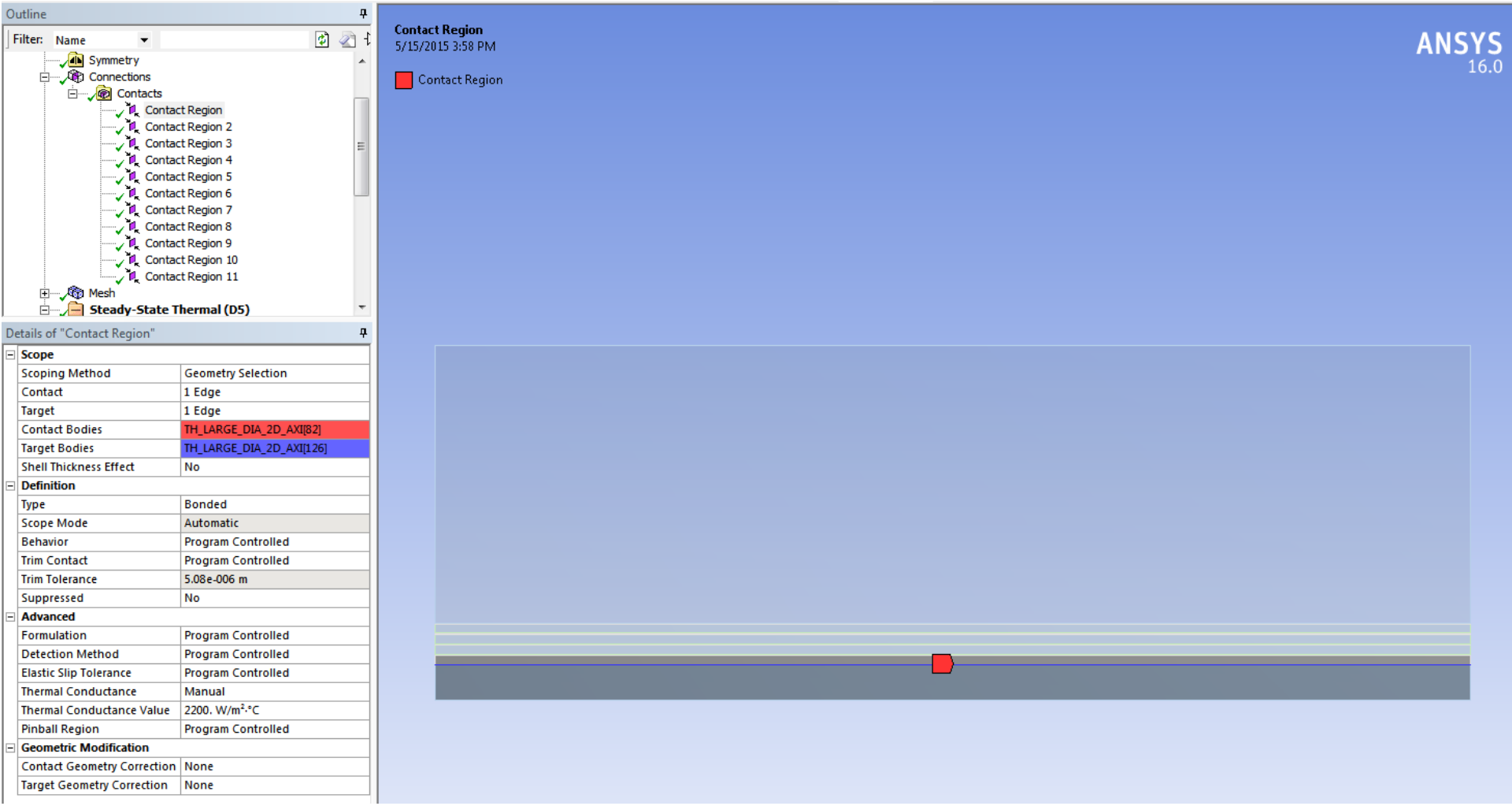

Basket and Four Legacy Targets

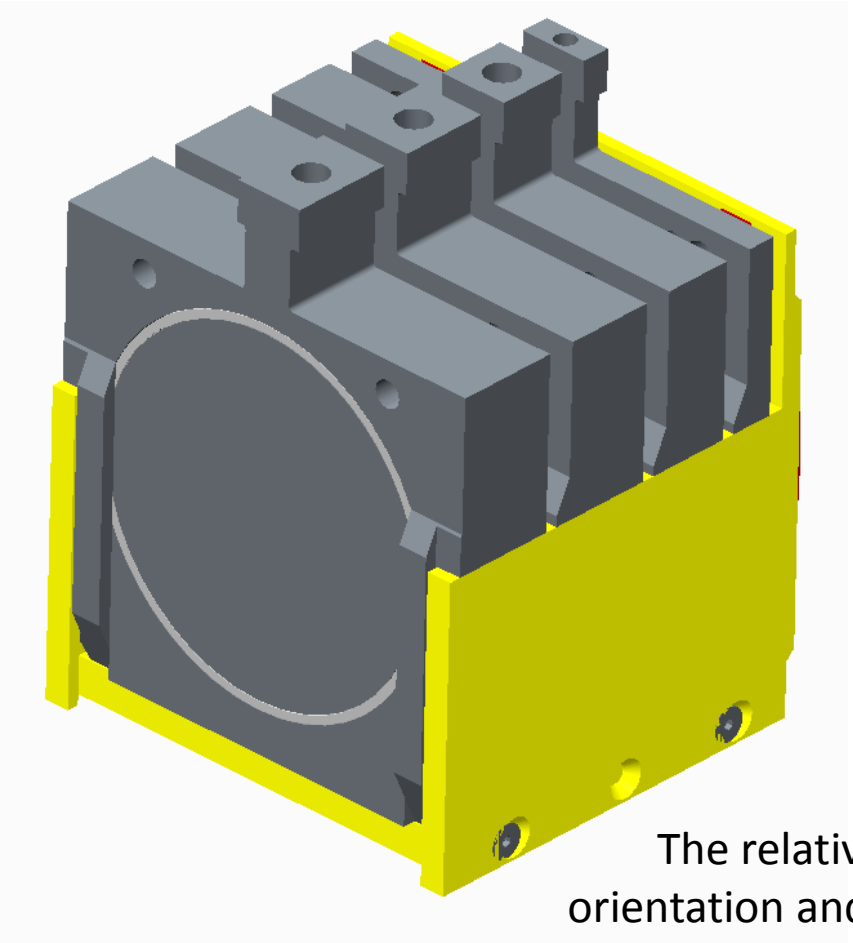

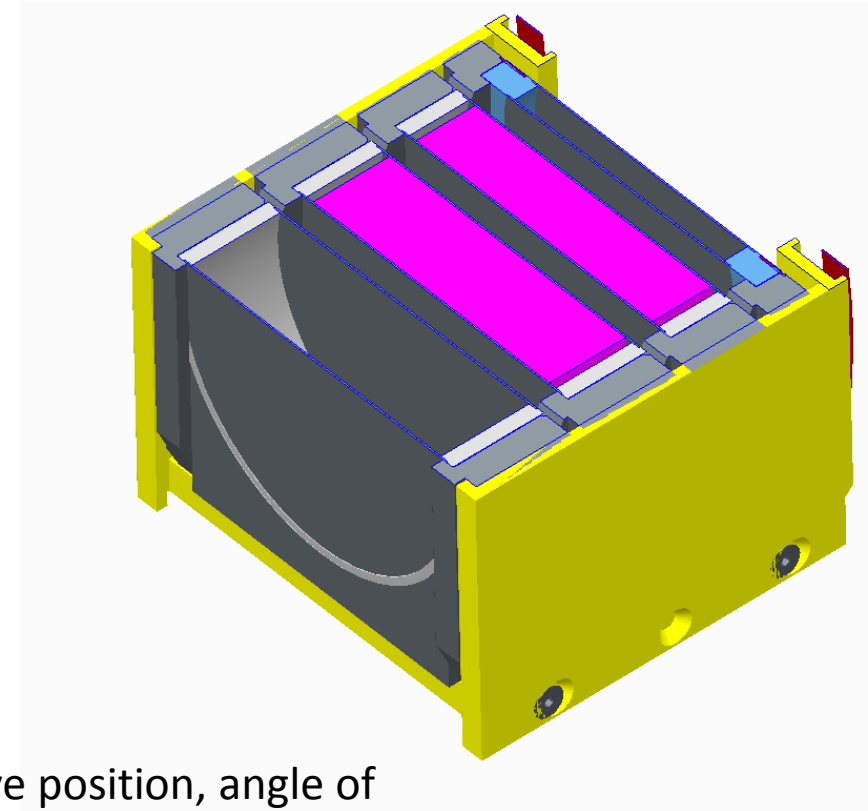

The relative position, angle of orientation and the targets themselves will change for this task

Commercial in Confidence

Basket and Representative Water Gaps

Basket

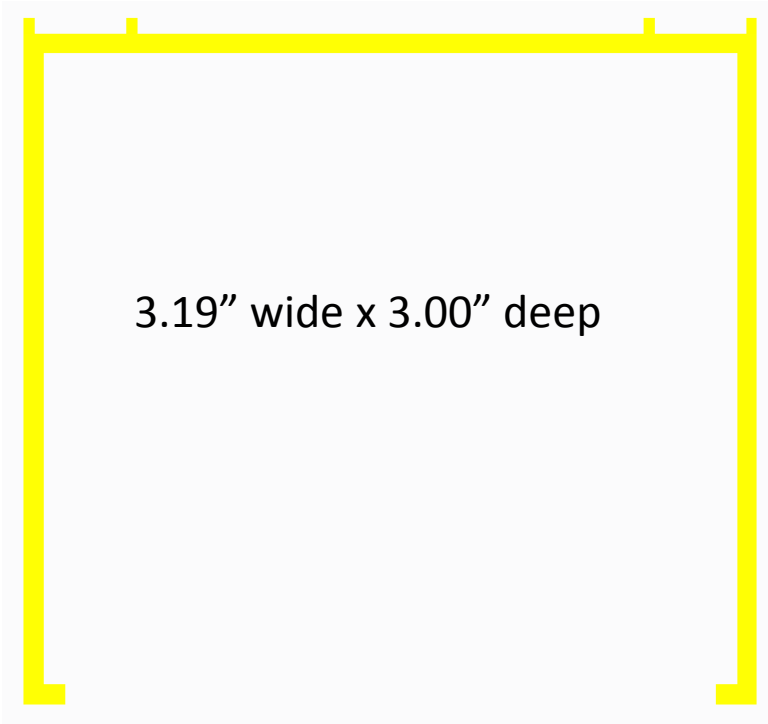

Basket and (4) legacy targets

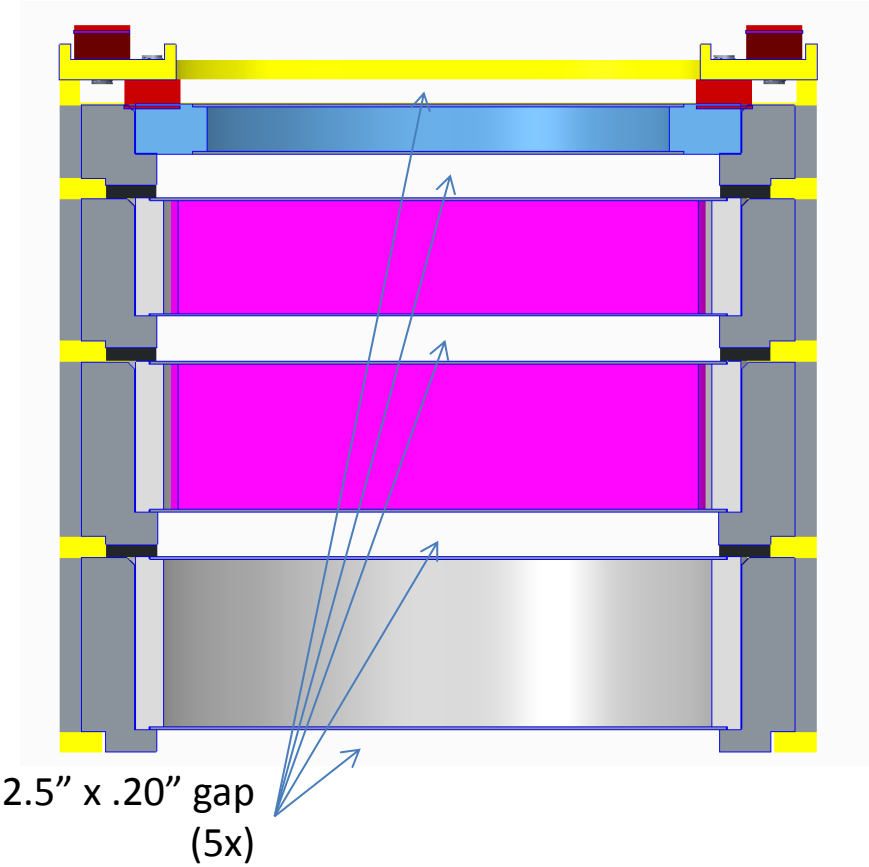

Commercial in Confidence

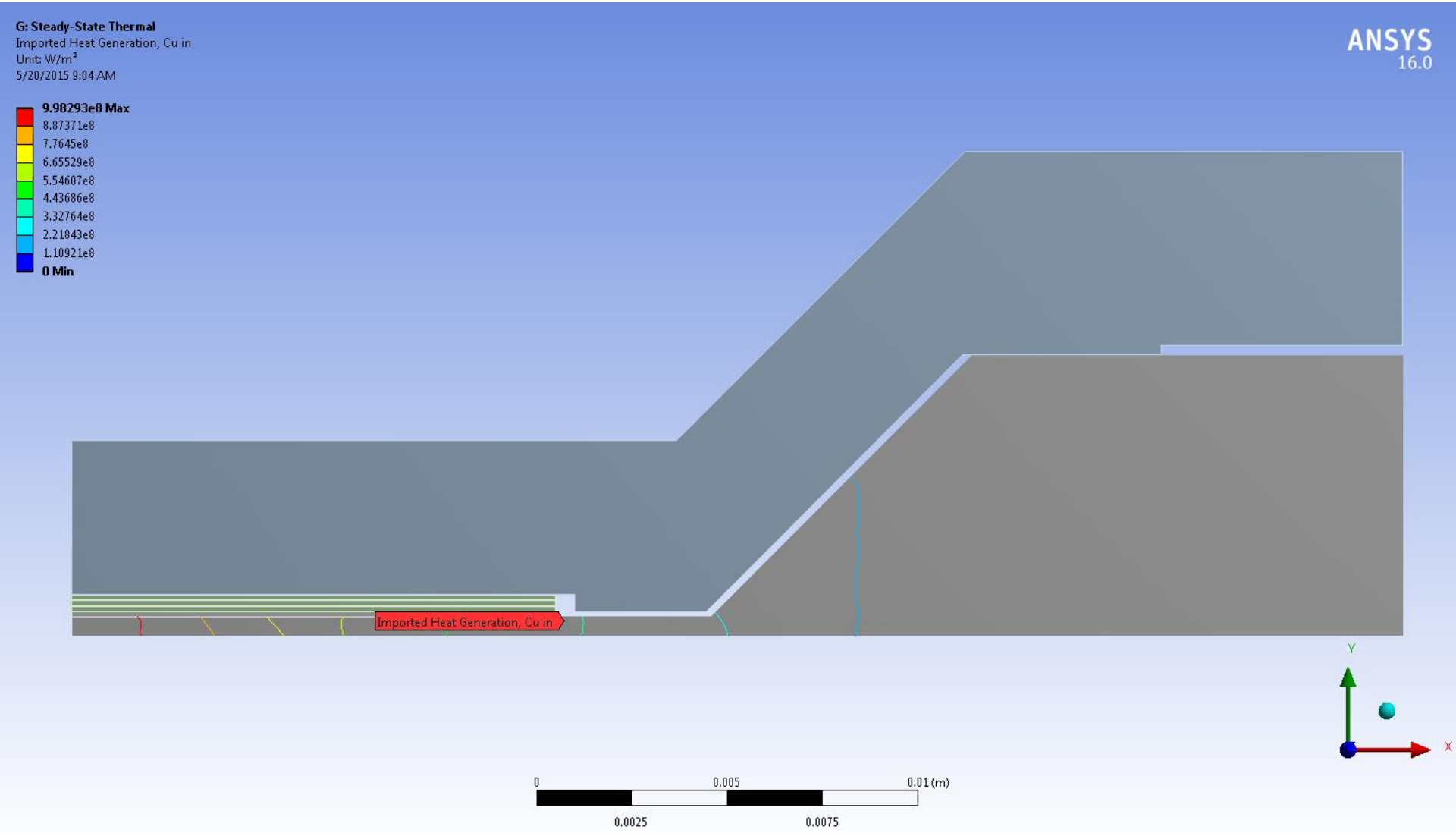
G: Steady-State Thermal
Imported Heat Generation, Cu in
Unit: W/m³
5/20/2015 9:04 AM
9.98293e8 Max
8.87371e8
7.7645e8
6.65529e8
5.54607e8
4.43686e8
3.32764e8
2.21843e8
1.10921e8
0 Min
ANSYS
16.0
Imported Heat Generation, Cu in
Y
X
0
0.005
0.01 (m)
0.0025
0.0075

Analysis Updates

Rev B, May 29, 2015

- Modeled entire target, not just center area
- Added a layer of He between all foils at the target center, heat transfer through He by conduction only
- Added .20” overlapped aluminum wrapping around the target outer edge, heat transfer by TCC
- Reduced water flow by 20%, mass flow measurement planned for this shut down
- Used CFX to show water flow streamlines and pressure gradients
- Beam more focused

Generic Target

- Axi-symmetric analysis region highlighted in blue
  - Ref. D25-M-3633

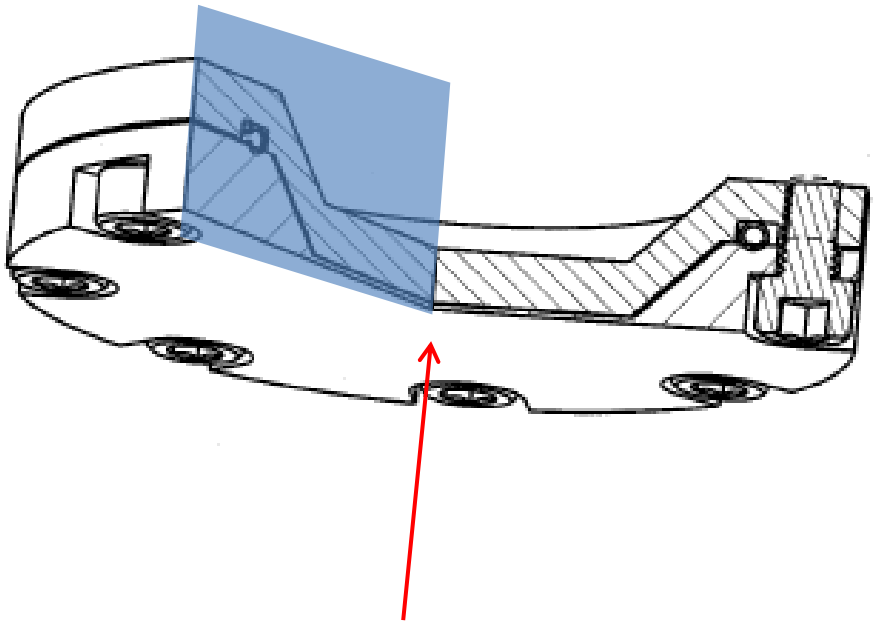

ANSYS Geometry

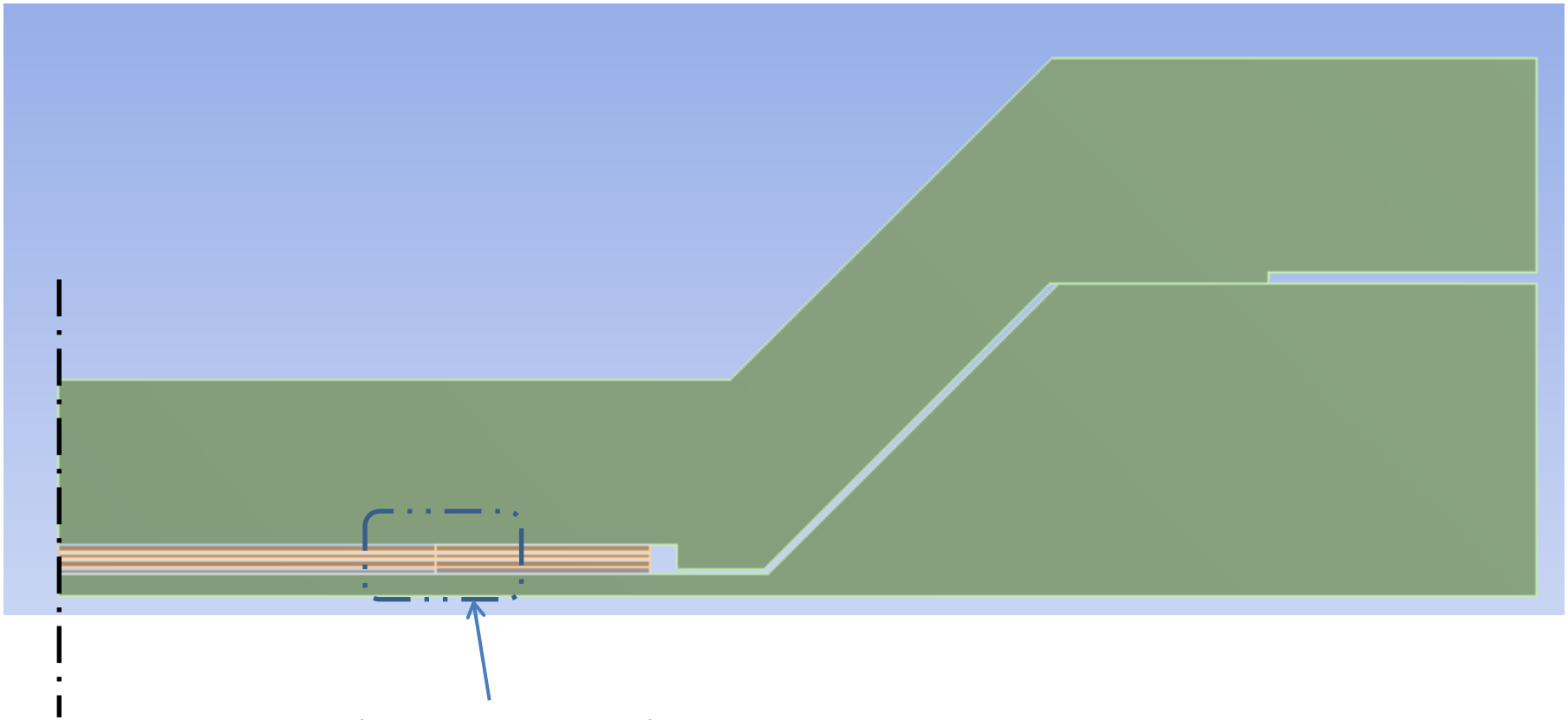

Foil Geometry Details
(next slide)

Foil Geometry

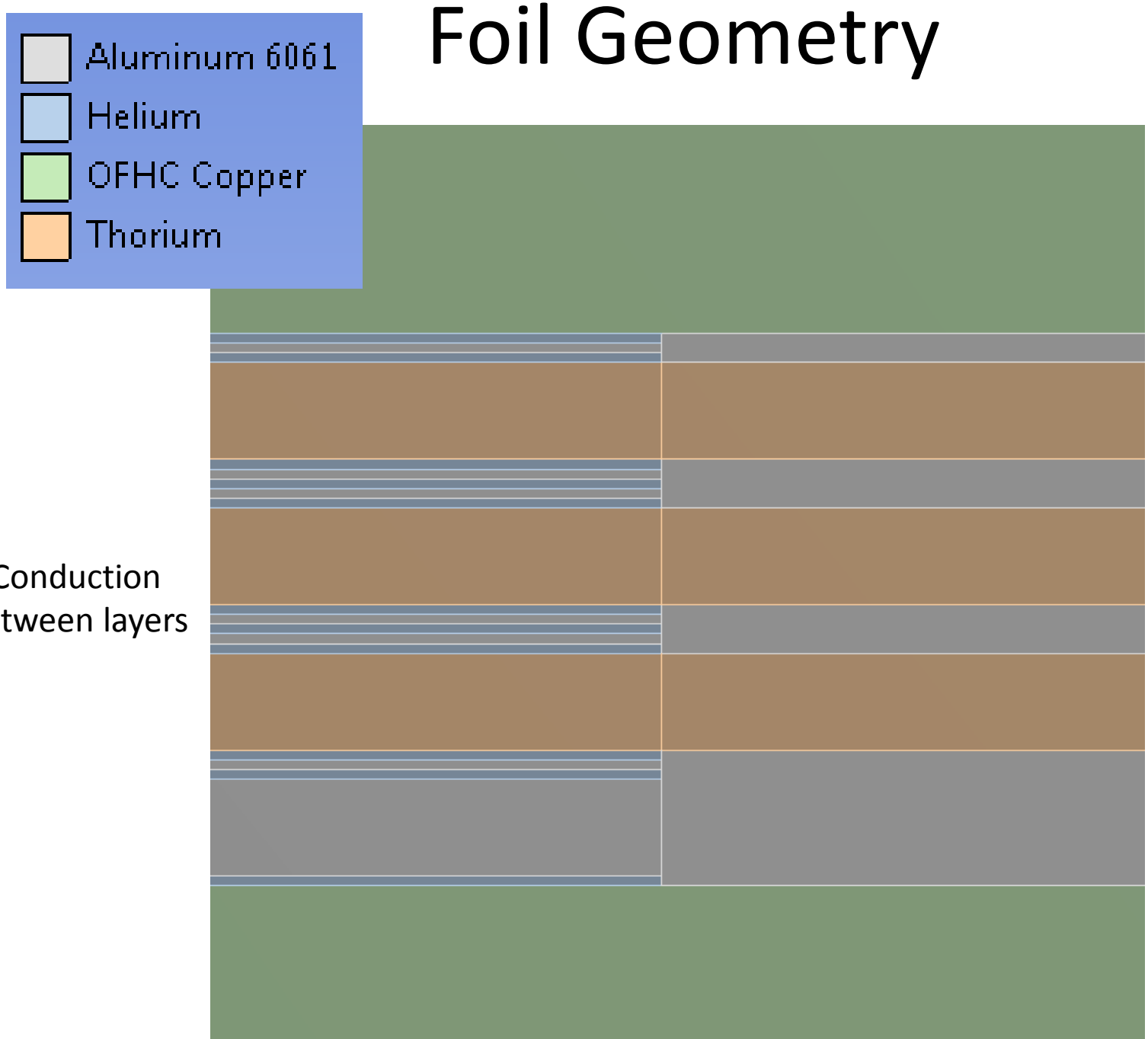

Conduction between layers

TCC between layers

Updated Heat Transfer Coefficients

Location	Average Heat Transfer Coefficient ($W/m^2*°C$)	Previous Values
Well	6857	10,000
Around Well	14,270	Not included
Flat Face	20,390	24,380

CFX Mesh

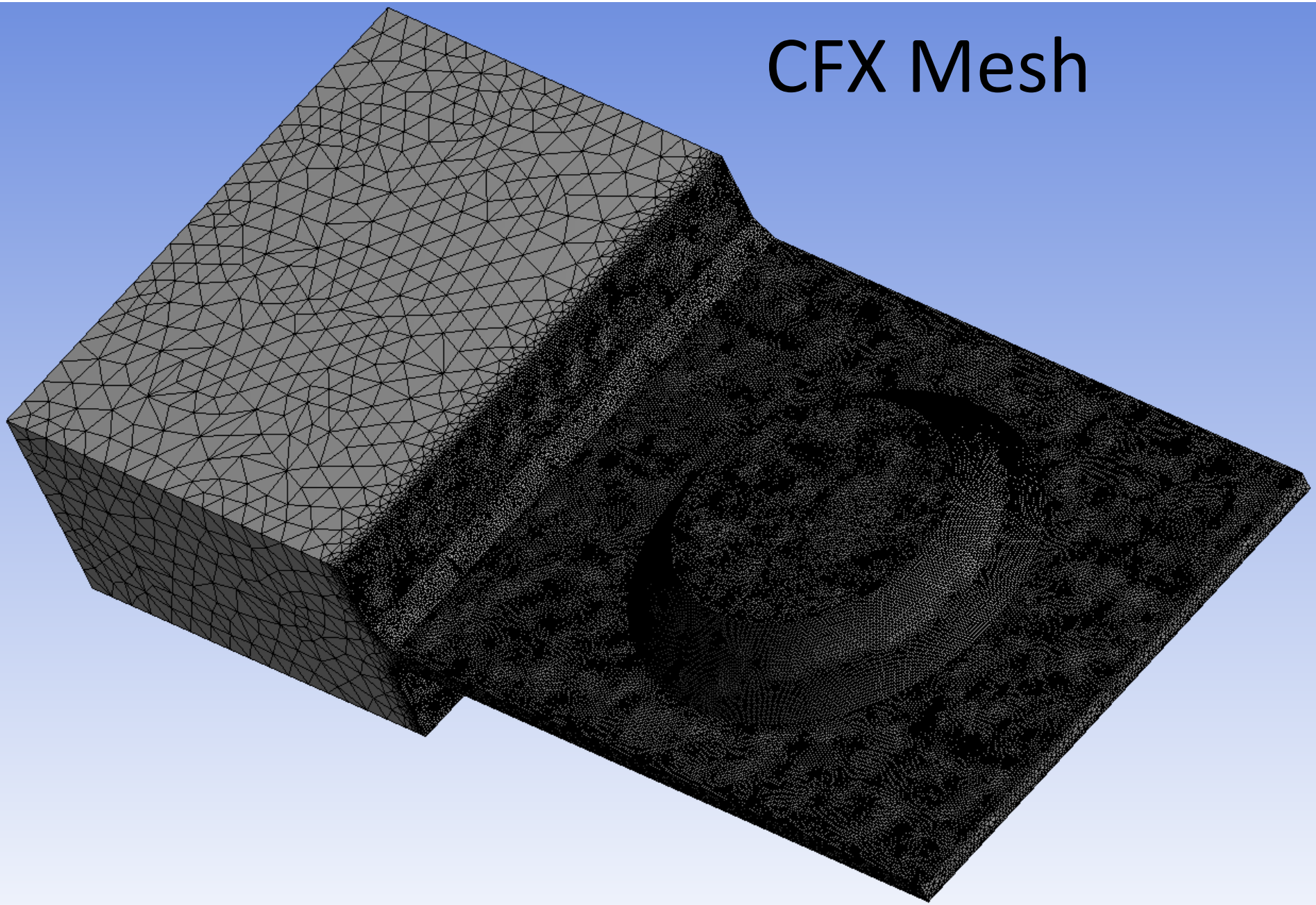

Centerline Section

Water Velocity Vector Diagram

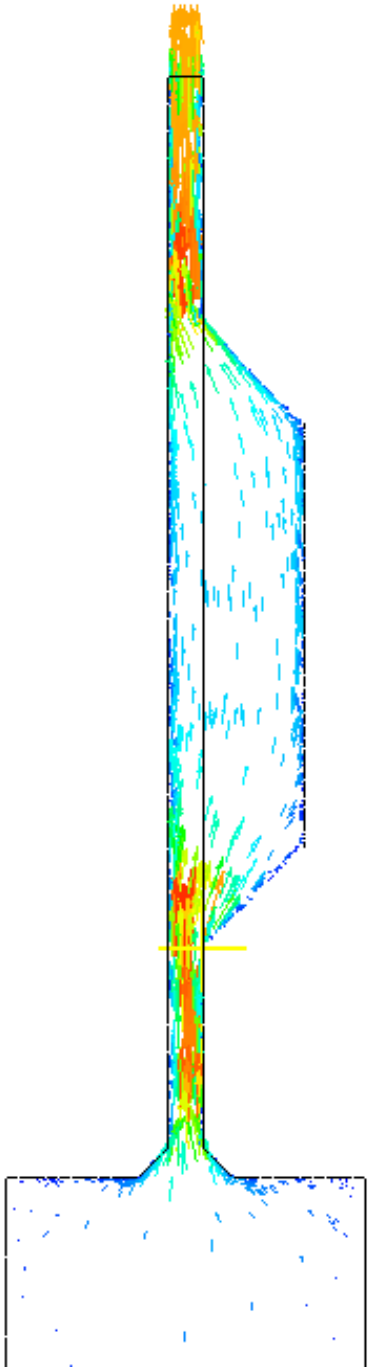

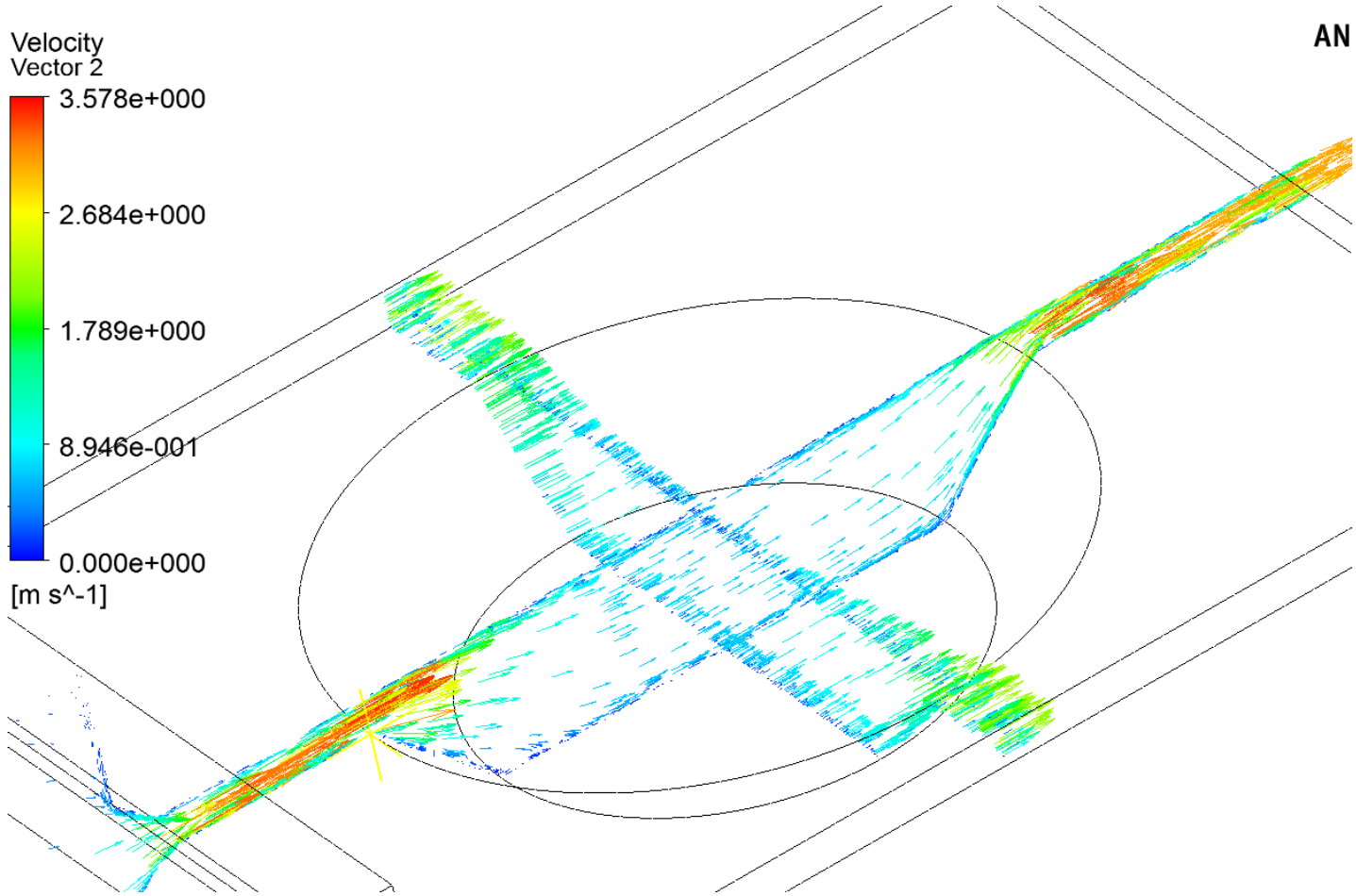

Orthogonal Planes

Pressure Contours

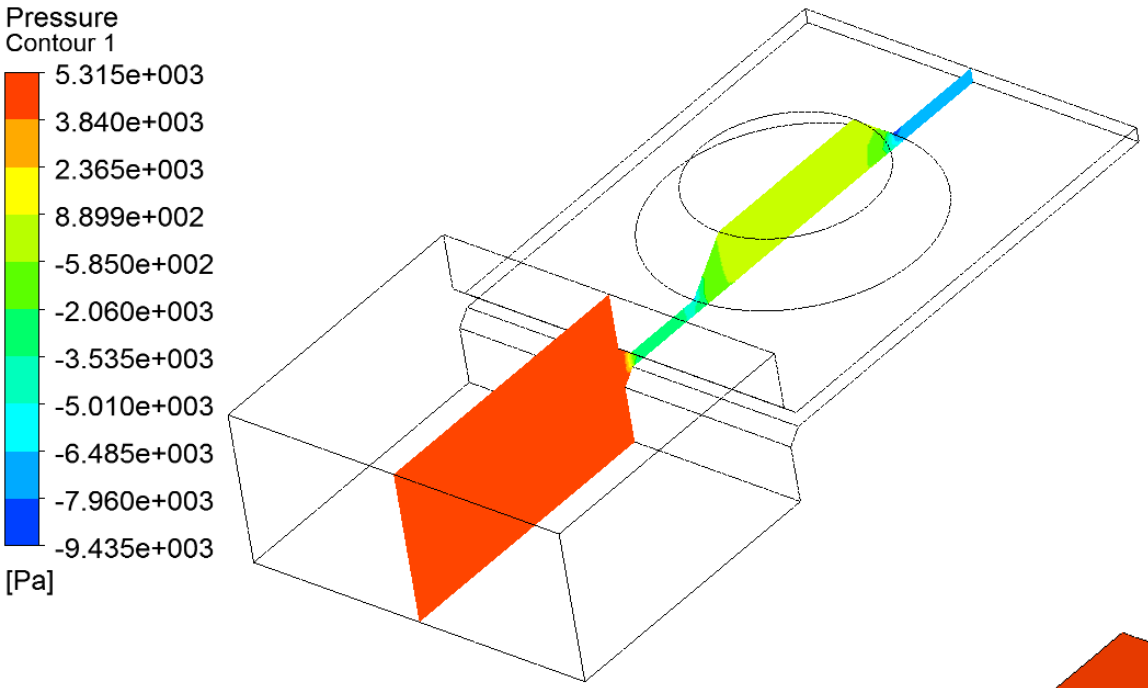

1.5 psi end to end delta P

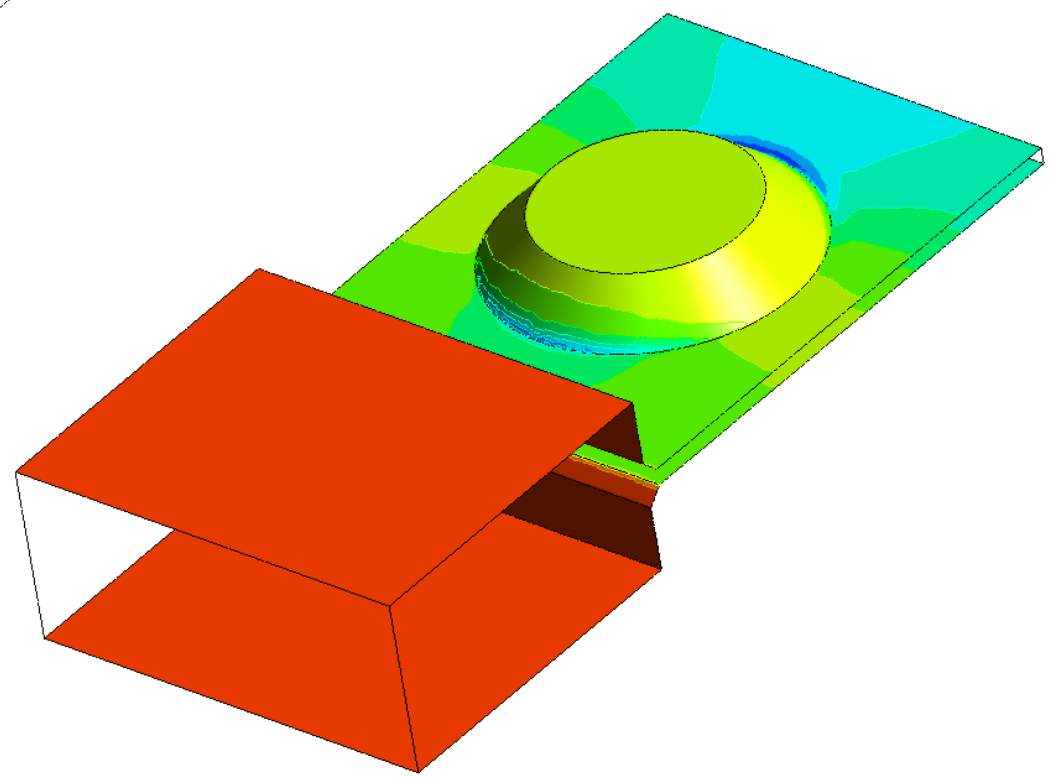

Beam Focus Parameters

- Gaussian Beam Distribution
  - FWHM=10.0 mm (was 16 mm)
  - FWTM=18.2 mm (was 42 mm)

Temperature Distribution

Entire Target, 244°C Maximum

Copper Holder 214°C Maximum, 206°C on flow surface

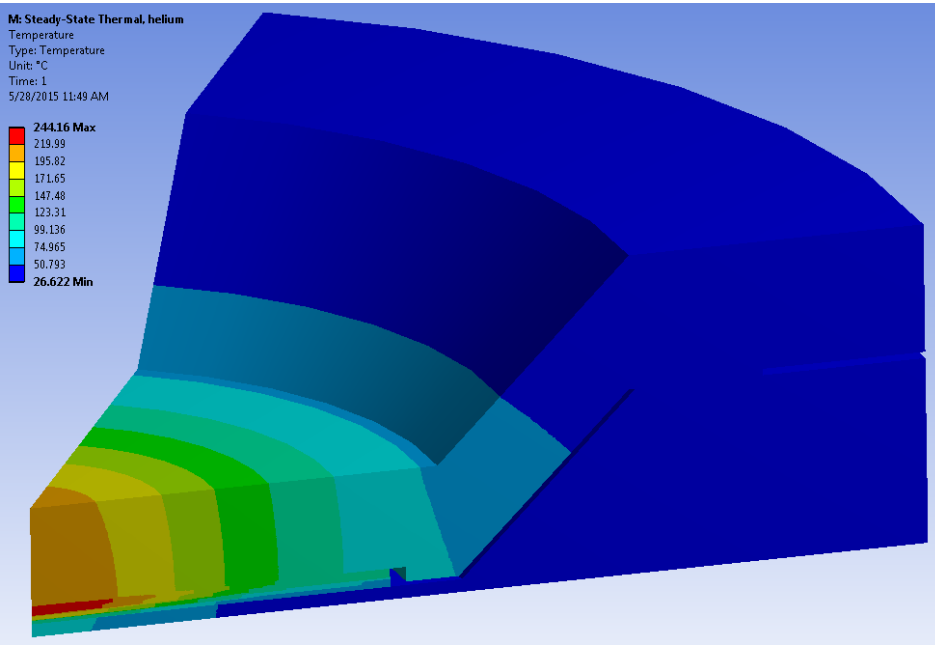

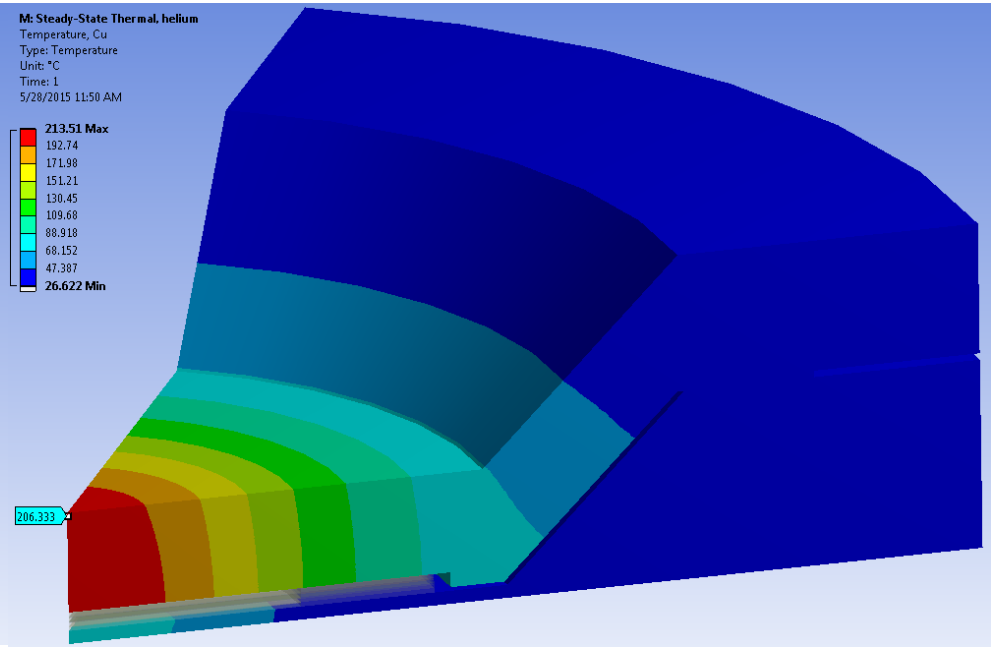

Heat Flux Criteria for Boiling Evaluation

123.3 W/cm² Maximum Heat Flux

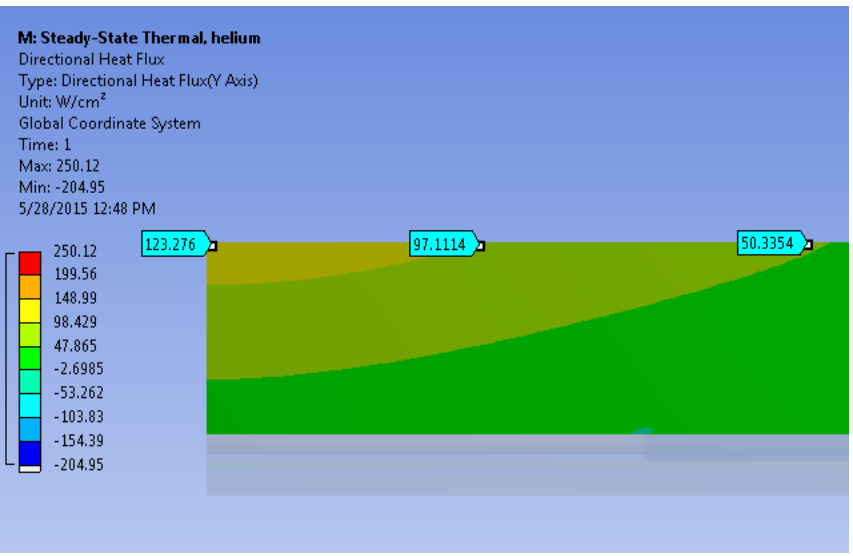

FREE Convection Boundary Condition

132.2 W/cm²

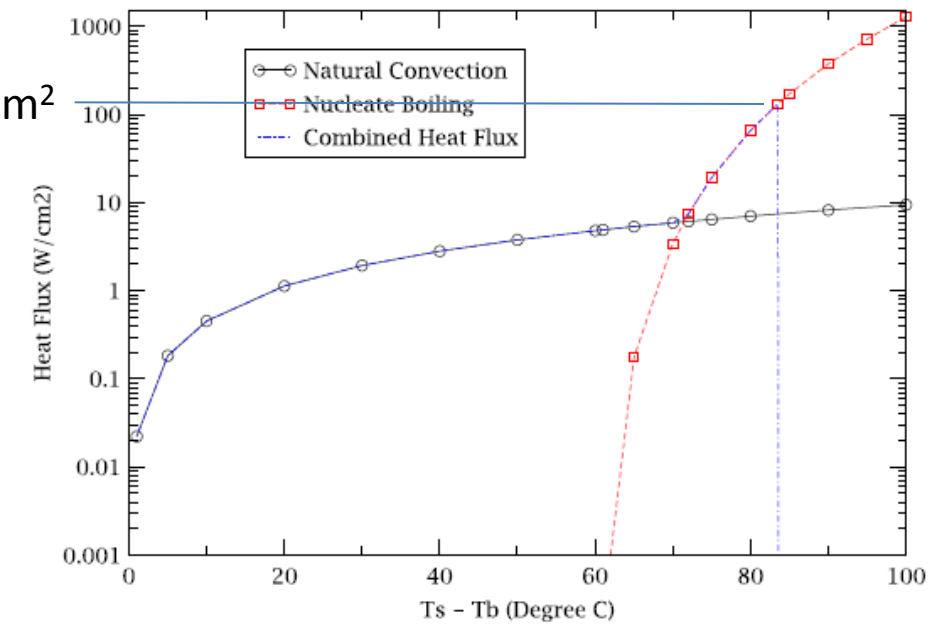

Figure 7.2 Heat Flux as Boundary Condition on Side plate

In Figure 7.2 the "Combined Heat Flux" indicates the larger of the heat fluxes due to natural convection and nucleate boiling. It can be observed in Table 7.3 and Figure 7.2 that the heat flux becomes zero when the surface temperature is 83.6°C. It is assumed that the heat transfer condition reaches boiling crisis after the critical heat flux of $q''_{CHF} = 132.2\ \frac{\mathrm{W}}{\mathrm{cm}^2}$ with the surface temperature of 83.5°C. (Mourgues, 2013) presents experimental results for the critical heat flux (~130 W/cm²) on a vertical plate with water.

Summary & Conclusion

- Maximum Aluminum temperature = 242 °C
- Aluminum melting temperature = 660 °C
- SAFE
- Maximum Thorium temperature = 244 °C
- Thorium melting temperature = 1755 °C
- SAFE
- Maximum Copper temperature = 214 °C
- Copper melting temperature = 1085 °C
- SAFE
- Maximum Copper heat flux at water surface = 123 W/cm^2
- Maximum allowable heat flux in *free convection (conservative)* environment = 132 W/cm^2
- SAFE

Cheng, Lap-Yan

You replied to this message on 5/28/2015 9:50 AM.

Sent: Thu 5/28/2015 9:22 AM
To: Cullen, Christian
Cc: Baek, Joo Seok

Chris,

Our calculation confirms your interpretation. With a heat flux of 123 W/ cm^2 our calculation indicates the wall is transferring heat to the water by subcooled boiling and the wall temperature is 144°C (assuming a water temperature of 27°C). We used two different boiling heat transfer correlations and they happen to crossover at about 120 W/ cm^2. I'm almost ready to send you the spreadsheets for our calculations. In your analysis, what is the radius of your center region showing the max. wall temperature and energy deposition?

Lap

From: Cullen, Christian
Sent: Thursday, May 28, 2015 8:48 AM
To: Cheng, Lap-Yan
Subject: Heat Flux

Lap,

The center of a target that I am currently analyzing has a maximum temperature = 206 °C with a 123 W/cm^2 heat flux. The target is in 1 m/s flowing water, 2 atm pressure. I believe this heat flux is not critical and the target will survive. Is your interpretation the same?

Thank you.
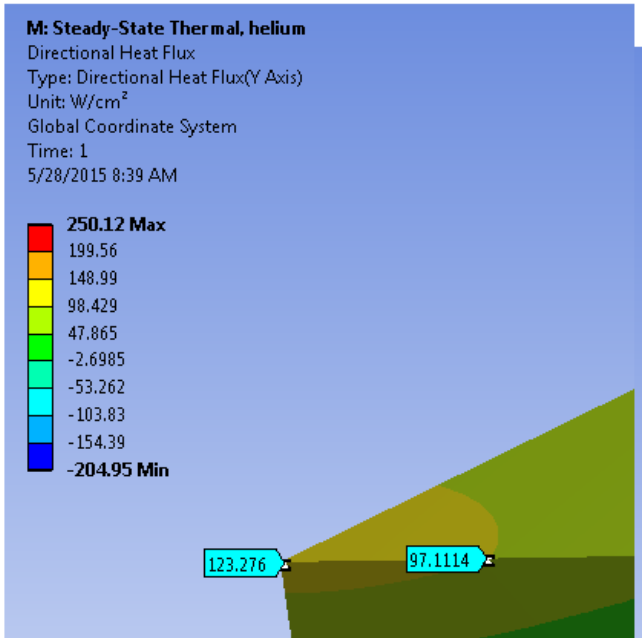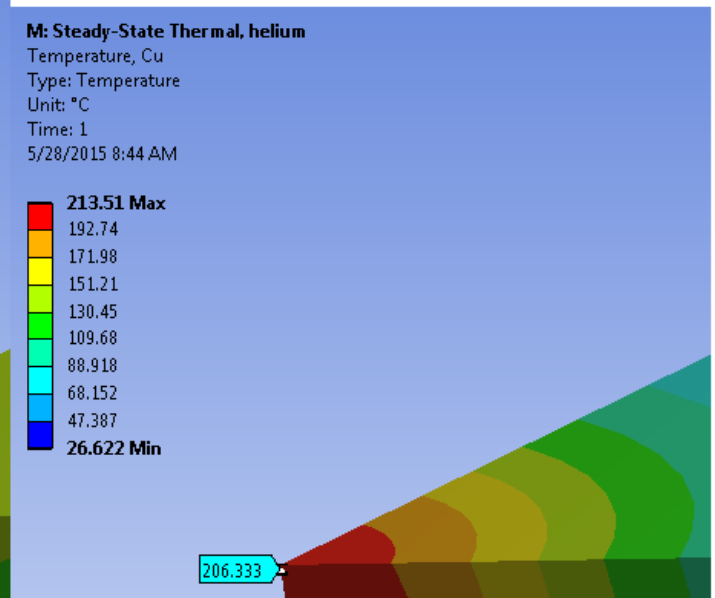
Chris