If you are using a printed copy of this procedure, and not the on-screen version, then you MUST make sure the dates at the bottom of the printed copy and the on-screen version match.
The on-screen version of the Collider-Accelerator Department Procedure is the Official Version.
Hard copies of all signed, official, C-A Operating Procedures are available by contacting the ESSHQ Procedures Coordinator, Bldg. 911A

9.1.15.a BLIP Target and Canning Record

Hand Processed Changes

HPC No.	Date	Page Nos.	Initials

Approved: _____***Signature with Date on File***_____
Collider-Accelerator Department Chairman Date

D. Beavis, S. Smith

Note 1: Uncontrolled copy printed from electronic master that is valid at time of printing. Always check that you have the latest revision of this document before use.

Note2: Leave no blanks. Indicate 'Not Applicable (N/A)', where appropriate.

Title and Preparer
Low energy slot 1 week irradiation of Scandium metal target (d×h=2.38×0.125 inch) welded in a copper can Dmitri Medvedev

Instructions	
Description	**Page No.**
1. Overview [short summary of purpose of experiment; name of principle investigator and researcher involved]	4
2. Target Material and Properties – [Provide physical properties of each component/material to be irradiated]	5
3. Target Canning Process – [provide images or drawings and reference the OPM procedures for closing and opening of target can]	6
4. Beam Characteristics [define required beam on target and total current required]	6
5. Proposed Experiment [Provide general description of a) how target will be supplied BLIP, b) target array in box 1 and box 2; c) thermal analysis of target material and target can d) transport of irradiated target to TPL; target opening and processing at TPL and e) disposal of waste. List persons responsible for conducting each task. If others are required to assist in the research irradiation, define level of skill of staff and contact time.]	6-7
a. Procedure for Irradiation of Target Material BLIP [Summarize steps for experiment including specialist and contact hours required for task]	6
b. Target Array [Define proposed target array for box 1 and box 2 including SRIM calculated entry and exit energy for each layer. Provide physical dimension of degraders, target can, materials and water gaps]	6

	c. **Thermal Analysis of Target Materials and Target Can** [Provide full description of data provide to specialist for calculations and any assumption made on material for calculations]	6
	d. **Transport and Processing at TPL** [Provide full description of task involved and responsible persons and contact hours required]	7
	e. **Disposal of waste.** [describe waste to be generated and how it will be disposed of]	7
6.	**Activation Analysis of Target Material and Can** [Provide full list of radionuclide produced and quantities, references used for calculations, as well as decay profiles if the dose rates exceed limit for removal from BLIP hot-cell. Ensure Health Physics has reviewed data and confirms decay requirement if they are dose related. Attach analyses if any.]	8
	a. **Radioactivity of each nuclide at end of bombardment (EOB), and 24 hours post EOB.**	8
7.	**Expected Dose Rate (e.g., R/h at 1 m)** [provide expected dose rate using *Microshield or equivalent* calculations for the combined and separate target and can irradiated. Provide expected dose rate at EOB at BLIP and expected dose rate when delivered to TPL]	9
8.	**Additional Safety Requirements** [address hazardous issues related to volatiles and or corrosive materials used and any additional equipment required for this experiment; hazardous materials information must be submitted to the C-AD ESSHQ Division Head for concurrence]	11
9.	**Special Operating Instructions and List of References or Supporting Documents**	n/a
10.	**Appendix** [provide additional support information as required]	11

1. Overview

The purpose of this experiment is to irradiate a full scale Sc (Scandium) target in the low energy slot at BLIP for 7 days. This experiment is performed in support of a future irradiation of the Sc metal target for 30 days. The results of this experiment provide insight into target survivability and anticipated yield of Ti-44 as well as allow comparison of the dose rate estimation calculations. It will also facilitate testing large scale separation process.

Identical scandium metal target is scheduled for a 1 month irradiation later in FY2015 in a low energy slot at BLIP. The purpose of these series of experiments is to assess feasibility of production of a long lived nuclide Ti-44 (T1/2=60 years) which is a parent nuclide of a short lived PET emitter Sc-44 (T1/2=3.97 h). Hence, Ti-44 and Sc-44 form a generator pair. Ti-44 will be separated from Sc and used to make a generator for Sc-44.

Before executing a long term 30 days irradiation, a 1 week short irradiation of an identical target will be carried out.

This canning record submission is only for the Sc metal target to be irradiated for 1 week. The canning record for Sc target to be irradiated for 30 days will be submitted separately.

2. Target Material and Properties

Target Name:	*To be determined*	**Target & Canning No.** *Assign unique no.* (year-00x)	**To be determined**

Target Material Properties: **Scandium disk**				
Purity or Grade	99.99%			
Chemical Formula	Sc			
Physical Characteristics at 70 °F or 21 °C	**Metal**			
Physical Form	**Foil (disk)**	**yes**	**Powder**	**n/a**
	Diameter (inches/mm)	**2.38 (60.45)**	**Thickness, mm**	**0.125 (3.175)**
Elements (%)	**Sc, 99.9%**			
Melting Point	**1541**	**°C**	**2806**	**°F**
Boiling Point	**2836**	**°C**	**5136**	**°F**
Thermal Conductivity	**15.8 $W.m^{-1}.K^{-1}$**	**Temperature dependence**	***(if available)*** ***n/a***	
Density	**2.99**		**g/cm^3**	
Specific Heat	**25.52**		**J/mol.K**	

Target Material Reactions / Properties						
Does the Target material react with any of the following?	**Aluminium**	**no**	**Air**	**no**	**CO_2**	**no**
	H_2O	**no**	**Lead**	**no**	**Zinc**	**no**
	Inconel 600	**no**	**S/Steel**	**no**	**Copper**	**no**

Canning Material Properties				
Chemical Formula	**Cu**			
Can Wall Thickness (inches/mm)				
Can Dimensions (inches/mm)	**Can Diameter 2.75 (69.85)**		**Can Width 0.220 (5.59)**	
Melting Point	**1668**	**°C**	**3034**	**°F**
Thermal Conductivity	**400 $W.m^{-1}.K^{-1}$**	**Temperature dependence**	*(if available)* *n/a*	
Density	**8.96**	**g/cm^3**		
Specific Heat	**24.44**		**J/mol.K**	

3. Target Canning Process
The target will be beam-welded by EB industries, following CAD OPM 19.17.1

4. Beam Characteristics		
Maximum Instantaneous Current Desired	**40**	**mA**
Average Current Desired	**Up to 120**	**µA**
Total Integrated Current Desired	**Up to 16800**	**µA - hrs**
Maximum Proton Energy on Target Material	**27 MeV**	**MeV**

5. Experiment Description

5.a Procedure for irradiation of target material in BLIP:

Irradiate target at BLIP in the low energy slot for 7 days and transport to BLIP after irradiation. Follow CAD OPM 19.17.20 to install or remove the target. **There is no day of the week constrains on the SOB or EOB, but the effort should be made to transport the target together with RbCl targets**.

5.b Target array in Box 1

Target array is given in the Appendix 1. Briefly, the target array is the same as OPM 19.17.20 a, except the Cu beam stop is replaced by the Sc target

5.c Thermal analysis of target material and target can (attach analyses if any):

Thermal analysis is given in appendix 2. The conclusions are given below:

Summary & Conclusion

- Maximum Copper temperature = 271 °C
- Copper melting temperature = 1085 °C
- SAFE
- Maximum Scandium temperature = 349 °C
- Scandium melting temperature = 1541 °C
- SAFE

Note: The copper housing temperature is greater than the boiling point of water, but less than other targets that have been placed in beam in BLIP.

5.d Transport of irradiated target to TPL, target opening and processing:

Follow CAD OPM 19.17.30 to transport the target from BLIP in a pig

Follow CAD OPM 19.9.4. to open the target using target cutter

Target processing:

The irradiated Sc disk will be dissolved in stoichiometric excess of 2N HCl. The target solution will be subjected to ion-exchange columns. Several evaporations will be carried out. The solvent involved in processing is HCl of various concentrations. No organic or solvents potentially generating mixed waste will be used. Evaporated acid fumes will be scavenged using TPL scrubber.

5.e Disposal of waste:

Liquid waste will be neutralised and disposed in D tank system. Target body will be disposed as TPL solid waste CAD OPM 19.30.3

6. Activation Analysis of Target Material and Can

Nuclides and activities (in Ci) produced in 7 days of irradiation at EOB and 24 h after EOB:

Target can

Nuclide	Z	Activity EOB, Ci	Activity 24 h, Ci
cu	64	3.43E+00	9.26E-01
cu	62	2.83E+00	0.00E+00
cu	61	5.82E-01	4.42E-03
cu	66	3.08E-01	4.67E-21
co	61	9.62E-02	4.02E-06
co	60m	8.54E-02	2.32E-11
ni	65	7.85E-02	1.07E-04
co	62	5.86E-02	0.00E+00
co	58	2.07E-02	2.05E-02
cu	60	1.94E-02	3.24E-20
mn	56	2.91E-03	4.60E-06
co	62m	2.46E-03	1.71E-34
co	60	1.16E-03	1.16E-03
co	57	8.52E-04	8.49E-04
fe	59	6.52E-04	6.42E-04
co	56	3.32E-04	3.30E-04
ni	63	1.97E-04	1.97E-04

Sc pack

Nuclide	Z	Activity EOB, Ci	Activity 24 h, Ci
sc	44	1.10E+02	1.90E+01
ti	45	8.03E+00	8.46E-01
sc	43	4.74E+00	7.98E-01
sc	44 m	2.62E-01	2.33E-01
k	42	1.61E-01	9.18E-02
sc	46	8.02E-02	7.99E-02
k	43	5.00E-02	3.66E-02
k	44	1.34E-02	9.25E-11
ca	45	1.29E-02	1.29E-02
ar	37	9.26E-03	9.18E-03
cl	38	3.20E-03	4.47E-08
ti	44	1.70E-03	1.70E-03
ar	41	1.65E-03	3.71E-05
cl	39	3.88E-04	2.19E-07

The activities were calculated using MCNPX code by Dr. Albert Hanson

Decay Requirements
None at BLIP.
Expected dose rate to the operator from Sc target at EOB at BLIP is 4.4 mR/h. The Microshield® report is attached (see Appendix 3). **In 24 hours the dose rate at BLIP to the operator is 0.080 mR/h (see Appendix 3)**
none

9. Special Operating Instructions
none

Supporting Documentation	
References	

Appendix 1

Target array and energy propagation calculations

	Energy: 116.38 MeV						
				thickness			
layer number	Layer	Material	density	inches	mm	Ei	Eout
1	Be window	Berillium	1.85	0.012	0.305	116.38	116.08
2	AlBeMet window	AlBeMet	2.10	0.012	0.305	116.08	115.74
3	Beamline window	stainless steel	7.99	0.031	0.787	115.74	112.87
4	water gap	water	1.00	0.106	2.692	112.87	111.06
5	BOX front window	stainless steel	7.99	0.020	0.508	111.06	109.14
6	cooling channel	water	1.00	0.200	5.080	109.14	105.59
7	vacuum box	stainles steel	7.99	0.029	0.737	105.59	102.80
8		vacuum	0.00	0.596	15.138		
9		stainless steel	7.99	0.029	0.737	102.80	99.74
10	cooling channel	water	1.00	0.200	5.080	99.74	95.95
11	can window	inconel	8.43	0.012	0.305	95.95	94.57
12	RbCl salt	RbCl	2.38	0.646	16.410	94.57	73.05
13	can window	inconel	8.43	0.012	0.305	73.05	71.36
14	cooling channel	water	1.00	0.200	5.080	71.36	66.41
15	can window	inconel	8.43	0.012	0.305	66.41	64.60
16	RbCl salt	RbCl	2.38	0.500	12.700	64.60	41.13
17	can window	inconel	8.43	0.012	0.305	41.13	38.51
18	cooling channel	water	1.00	0.200	5.080	38.51	29.35
19	Copper window	Cu	8.96	0.012	0.305	29.35	25.92
20	Scandium disk	Sc	2.99	0.125	3.178	25.92	5.20
21	Copper window	Cu	8.96	0.083	2.104	5.20	stop
22	cooling channel	water	1.00	0.200	5.080	0.00	0.00

Appendix 2

Thermal heat load calculations for the Sc target

Scandium Target & Copper Holder Thermal Analysis

Chris Cullen

March 23, 2015

Conditions

- Steady state average current = 115 µA
- Pulse width = .000425 sec
- Pulse Frequency = 6.667 Hz
- 4 targets, (5) .20" water gaps
- 3375 Watts total

Finite Element Model

- 2D Axi-symmetric model
- Copper Target, .220" thick assembled
- (1) x .125" thick Scandium
- (1) .012" thick Copper face, upstream
- (1) x .083" thick Copper face, downstream
- Steady-state analysis
- Thermal contact conductance between each layer=2,000 W/m^2*°C
- Steady state water cooling on exterior=8,388 W/m^2*°C
- Gaussian Internal heat generation for all bodies

Finite Element Model

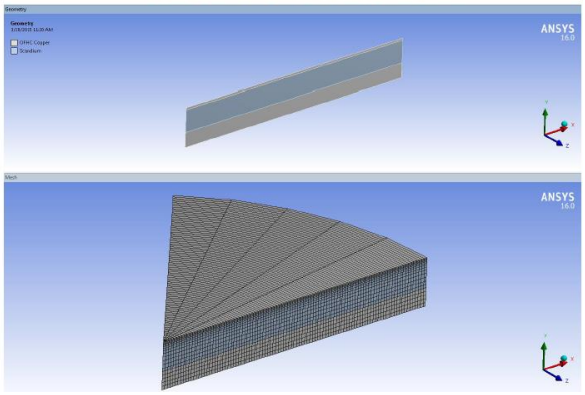

Target Temperature Profile

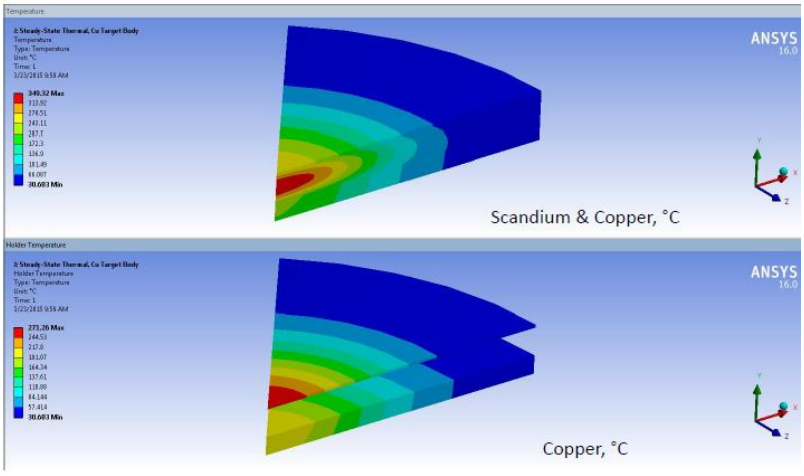

Appendix 3

Microshield® report: dose rate at BLIP at EOB, 7 days at 115 µA

MicroShield 7.02 BNL (7.02-0000)		
Date	**By**	**Checked**

Filename	Run Date	Run Time	Duration
Sc puck target_nuclides.ms7	March 31, 2015	10:16:37 AM	00:00:00

Project Info	
Case Title	Sc puck BLIP
Description	Dose rate EOB 7 day beam
Geometry	8 - Cylinder Volume - End Shields

Source Dimensions	
Height	0.318 cm (0.1 in)
Radius	3.023 cm (1.2 in)

Dose Points			
A	**X**	**Y**	**Z**
#1	0.0 cm (0.0 in)	76.2 cm (2 ft 6.0 in)	0.0 cm (0.0 in)

Shields			
Shield N	**Dimension**	**Material**	**Density**
Source	.556 in³	Scandium	2.99
Shield 1	12.0 in	Air	0.00122
Shield 2	6.0 in	Lead	11.34
Air Gap		Air	0.00122

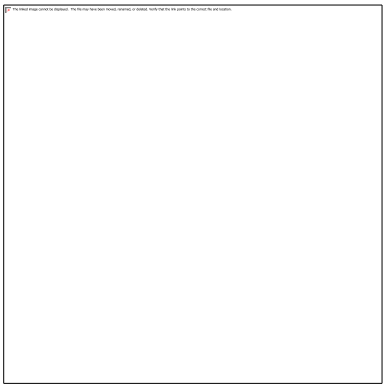

Source Input: Grouping Method - Standard Indices
Number of Groups: 25
Lower Energy Cutoff: 0.015
Photons < 0.015: Excluded
Library: ICRP-38

Nuclide	Ci	Bq	µCi/cm³	Bq/cm³
Ar-41	1.6500e-003	6.1050e+007	1.8106e+002	6.6993e+006
Cl-38	3.2000e-003	1.1840e+008	3.5115e+002	1.2993e+007

Cl-39	3.8800e-004	1.4356e+007	4.2577e+001	1.5754e+006
Co-58	2.0700e-002	7.6590e+008	2.2715e+003	8.4046e+007
Cu-61	5.8200e-001	2.1534e+010	6.3866e+004	2.3630e+009
Cu-64	3.4300e+000	1.2691e+011	3.7639e+005	1.3926e+010
Cu-66	3.0800e-001	1.1396e+010	3.3798e+004	1.2505e+009
K-38	2.2300e-003	8.2510e+007	2.4471e+002	9.0542e+006
K-42	1.6100e-001	5.9570e+009	1.7667e+004	6.5369e+008
K-43	5.0000e-002	1.8500e+009	5.4867e+003	2.0301e+008
K-44	1.3400e-002	4.9580e+008	1.4704e+003	5.4407e+007
Ni-65	7.8500e-002	2.9045e+009	8.6142e+003	3.1873e+008
Sc-43	4.7400e+000	1.7538e+011	5.2014e+005	1.9245e+010
Sc-44	1.1000e+002	4.0700e+012	1.2071e+007	4.4662e+011
Sc-44m	2.6200e-001	9.6940e+009	2.8751e+004	1.0638e+009
Ti-44	1.7000e-003	6.2900e+007	1.8655e+002	6.9023e+006
Ti-45	8.0300e+000	2.9711e+011	8.8117e+005	3.2603e+010

Buildup: The material reference is Shield 2 **Integration Parameters**	
Radial	20
Circumferential	10
Y Direction (axial)	10

Results

Energy (MeV)	Activity (Photons/sec)	Fluence Rate MeV/cm²/sec No Buildup	Fluence Rate MeV/cm²/sec With Buildup	Exposure Rate mR/hr No Buildup	Exposure Rate mR/hr With Buildup
0.06	1.158e+09	0.000e+00	9.592e-24	0.000e+00	1.905e-26
0.08	5.957e+07	2.745e-159	7.375e-25	4.344e-162	1.167e-27
0.15	6.290e+04	6.951e-146	3.556e-26	1.145e-148	5.856e-29
0.2	8.091e+07	3.159e-69	3.014e-24	5.575e-72	5.319e-27
0.3	1.118e+10	2.085e-24	7.590e-22	3.955e-27	1.440e-24
0.4	1.339e+11	3.460e-11	8.367e-11	6.741e-14	1.630e-13
0.5	8.539e+12	2.416e-04	6.982e-04	4.741e-07	1.370e-06
0.6	4.174e+09	4.739e-05	1.486e-04	9.250e-08	2.900e-07
0.8	1.415e+09	6.558e-03	2.366e-02	1.247e-05	4.501e-05

1.0	4.069e+12	3.949e+02	1.532e+03	7.280e-01	2.824e+00
1.5	4.006e+10	1.193e+02	4.843e+02	2.007e-01	8.149e-01
2.0	3.814e+08	4.042e+00	1.661e+01	6.250e-03	2.569e-02
3.0	4.690e+09	1.340e+02	5.404e+02	1.818e-01	7.332e-01
4.0	2.200e+07	8.756e-01	3.432e+00	1.083e-03	4.246e-03
5.0	6.297e+06	2.722e-01	1.132e+00	3.120e-04	1.298e-03
Totals	**1.280e+13**	**6.534e+02**	**2.578e+03**	**1.118e+00**	**4.403e+00**

Microshield® report: dose rate at BLIP at 24 hours after EOB, 7 days at 115 µA

MicroShield 7.02 BNL (7.02-0000)		
Date	**By**	**Checked**

Filename	**Run Date**	**Run Time**	**Duration**
Sc puck target_nuclides.ms7	March 31, 2015	10:19:21 AM	00:00:00

Project Info	
Case Title	Sc puck BLIP
Description	Dose rate EOB 7 day beam
Geometry	8 - Cylinder Volume - End Shields

Source Dimensions	
Height	0.318 cm (0.1 in)
Radius	3.023 cm (1.2 in)

Dose Points			
A	**X**	**Y**	**Z**
#1	0.0 cm (0.0 in)	76.2 cm (2 ft 6.0 in)	0.0 cm (0.0 in)

Shields			
Shield N	**Dimension**	**Material**	**Density**
Source	.556 in³	Scandium	2.99
Shield 1	12.0 in	Air	0.00122
Shield 2	6.0 in	Lead	11.34

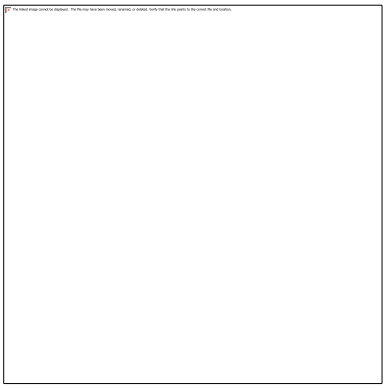

Air Gap		Air	0.00122

Source Input: Grouping Method - Standard Indices
Number of Groups: 25
Lower Energy Cutoff: 0.015
Photons < 0.015: Excluded
Library: ICRP-38

Nuclide	Ci	Bq	µCi/cm³	Bq/cm³
Ar-39	1.5247e-010	5.6416e+000	1.6732e-005	6.1908e-001
Ar-41	1.8326e-007	6.7806e+003	2.0110e-002	7.4407e+002
Cl-38	7.1698e-015	2.6528e-004	7.8678e-010	2.9111e-005
Cl-39	6.1997e-012	2.2939e-001	6.8033e-007	2.5172e-002
Co-58	2.0498e-002	7.5844e+008	2.2494e+003	8.3227e+007
Cu-61	4.4156e-003	1.6338e+008	4.8455e+002	1.7928e+007
Cu-64	9.2569e-001	3.4250e+010	1.0158e+005	3.7585e+009
Cu-66	3.1035e-086	1.1483e-075	3.4056e-081	1.2601e-076
K-38	3.8014e-060	1.4065e-049	4.1715e-055	1.5434e-050
K-42	4.1908e-002	1.5506e+009	4.5988e+003	1.7016e+008
K-43	2.3949e-002	8.8612e+008	2.6281e+003	9.7239e+007
K-44	3.4600e-022	1.2802e-011	3.7968e-017	1.4048e-012
Ni-65	1.0664e-004	3.9457e+006	1.1702e+001	4.3298e+005
Sc-43	6.5918e-002	2.4390e+009	7.2335e+003	2.6764e+008
Sc-44	1.7971e+000	6.6492e+010	1.9720e+005	7.2964e+009
Sc-44m	1.9725e-001	7.2982e+009	2.1645e+004	8.0087e+008
Ti-44	1.6999e-003	6.2897e+007	1.8654e+002	6.9021e+006
Ti-45	3.6227e-002	1.3404e+009	3.9753e+003	1.4709e+008

Buildup: The material reference is Shield 2
Integration Parameters

Radial	20
Circumferential	10
Y Direction (axial)	10

Results

Energy (MeV)	Activity (Photons/sec)	Fluence Rate MeV/cm²/sec No Buildup	Fluence Rate MeV/cm²/sec With Buildup	Exposure Rate mR/hr No Buildup	Exposure Rate mR/hr With Buildup

0.06	6.353e+07	0.000e+00	5.263e-25	0.000e+00	1.045e-27
0.08	5.956e+07	2.745e-159	7.375e-25	4.344e-162	1.167e-27
0.15	6.290e+04	6.950e-146	3.556e-26	1.145e-148	5.855e-29
0.2	3.876e+07	1.513e-69	1.443e-24	2.670e-72	2.548e-27
0.3	6.346e+09	1.184e-24	4.309e-22	2.245e-27	8.174e-25
0.4	2.708e+09	6.994e-13	1.692e-12	1.363e-15	3.296e-15
0.5	1.444e+11	4.084e-06	1.180e-05	8.016e-09	2.317e-08
0.6	8.300e+08	9.424e-06	2.954e-05	1.839e-08	5.766e-08
0.8	7.644e+08	3.544e-03	1.279e-02	6.741e-06	2.432e-05
1.0	6.675e+10	6.479e+00	2.513e+01	1.194e-02	4.632e-02
1.5	1.060e+09	3.154e+00	1.281e+01	5.307e-03	2.155e-02
2.0	2.799e+06	2.967e-02	1.219e-01	4.588e-05	1.886e-04
3.0	7.514e+07	2.147e+00	8.659e+00	2.913e-03	1.175e-02
4.0	6.632e-08	2.639e-15	1.035e-14	3.265e-18	1.280e-17
5.0	1.626e-13	7.027e-21	2.923e-20	8.056e-24	3.350e-23
Totals	**2.230e+11**	**1.181e+01**	**4.673e+01**	**2.021e-02**	**7.983e-02**