If you are using a printed copy of this procedure, and not the on-screen version, then you MUST make sure the dates at the bottom of the printed copy and the on-screen version match.
The on-screen version of the Collider-Accelerator Department Procedure is the Official Version.
Hard copies of all signed, official, C-A Operating Procedures are available by contacting the ESSHQ Procedures Coordinator, Bldg. 911A

9.1.15.a BLIP Target and Canning Record

Hand Processed Changes

HPC No.	Date	Page Nos.	Initials
_____	_____	_____	_____
_____	_____	_____	_____
_____	_____	_____	_____
_____	_____	_____	_____

Approved: _____***Signature with Date on File***_____
Collider-Accelerator Department Chairman Date

D. Beavis

Note 1: Uncontrolled copy printed from electronic master that is valid at time of printing. Always check that you have the latest revision of this document before use.

Note2: Leave no blanks. Indicate 'Not Applicable (N/A)', where appropriate.

Title and Preparer
Irradiation of Th foil at 160 MeV, transport to TPL Mausner/Medvedev

Instructions	
Description	**Page No.**
1. Overview [short summary of purpose of experiment; name of principle investigator and researcher involved]	4
2. Target Material and Properties – [Provide physical properties of each component/material to be irradiated]	5
3. Target Canning Process – [provide images or drawings and reference the OPM procedures for closing and opening of target can]	6
4. Beam Characteristics [define required beam on target and total current required]	7
5. Proposed Experiment [Provide general description of a) how target will be supplied BLIP, b) target array in box 1 and box 2; c) thermal analysis of target material and target can d) transport of irradiated target to TPL; target opening and processing at TPL and e) disposal of waste. List persons responsible for conducting each task. If others are required to assist in the research irradiation, define level of skill of staff and contact time.]	7
a. Procedure for Irradiation of Target Material BLIP [Summarize steps for experiment including specialist and contact hours required for task]	7
b. Target Array [Define proposed target array for box 1 and box 2 including SRIM calculated entry and exit energy for each layer. Provide physical dimension of degraders, target can, materials and water gaps]	7
c. Thermal Analysis of Target Materials and Target Can [Provide full description of data provide to specialist for calculations and any assumption made on material for calculations]	7

	d. Transport and Processing at TPL [Provide full description of task involved and responsible persons and contact hours required]	8
	e. Disposal of waste. [describe waste to be generated and how it will be disposed of]	9
6.	**Activation Analysis of Target Material and Can** [Provide full list of radionuclide produced and quantities, references used for calculations, as well as decay profiles if the dose rates exceed limit for removal from BLIP hot-cell. Ensure Health Physics has reviewed data and confirms decay requirement if they are dose related. Attach analyses if any.]	8
	a. Radioactivity of each nuclide at end of bombardment (EOB), at 8 hours and 24 hours post EOB.	
7.	**Expected Dose Rate (e.g., R/h at 1 m)** [provide expected dose rate using *Microshield or equivalent* calculations for the combined and separate target and can irradiated. Provide expected dose rate at EOB at BLIP and expected dose rate when delivered to TPL]	8-9
8.	**Additional Safety Requirements** [address hazardous issues related to volatiles and or corrosive materials used and any additional equipment required for this experiment; hazardous materials information must be submitted to the C-AD ESSHQ Division Head for concurrence]	9
9.	**Special Operating Instructions and List of References or Supporting Documents**	9
10.	**Appendix** [provide additional support information as required]	11-40

1. Overview

This experiment is part of a ten year project to develop production of Ac-225/Bi-213 radiotherapeutic pair (half life 10 d/45.6 min) by proton spallation for cancer therapy of disseminated disease such as leukemia. The project is a collaborative joint effort between BNL, LANL and ORNL. This year's irradiations are a continuation of experiments begun in FY12. They involve irradiating natural thorium metal (half life 14 billion years) in the BLIP in order to produce Ac-225 (half life 10.0d). A total of fifteen irradiations have already been successfully carried out on Th foil targets at Linac energies of 140, 160, 180 and 200 MeV for periods ranging from 17 hours to 9.7 days. The goal of this irradiation will be to test the thermal performance of a thicker more massive thorium target, closer to required production level for Stage 3 of the Tri-Lab Project. The target will not be shipped to ORNL for processing as done for all previous targets but only opened and visually inspected for any signs of warping, burning, melting, etc. We call it a "cook and look" irradiation. The irradiation duration will be short, only 4 hours. The calculated peak thorium temperature shown in Appendix 3 is only 257^0C. No damage is expected at this modest temperature. However localized hot spots may exist due to inadequate contact of the Th disk and the window cooling surface. The use of helium fill is expected to ameliorate this situation.

As originally planned we wanted to irradiate at 200 MeV at maximum Linac intensity of 165µA to create the maximum thermal load on target. However due to sparking in mod 6 of the Linac the BLIP intensity will be limited to130µA. Therefore in order to create the same thermal load a lower energy on target with higher LET will be used instead. The rastered beam will be used.

The target design is adapted from the Inconel clad thorium targets used to date in 2016 but will use 0.120" thick Th disk, increased from 0.015" used previously. The target diameter is the same, so the total Th mass will be 8 times larger. Also instead of a LANL built Inconel capsule electron beam welded on the edge, BNL will fabricate the Inconel capsule components, EBW one window and ship the pieces to the LANL Sigma Group. There the Th disk will be loaded and the other window will be TIG welded under helium. This cannot be done at BNL. The helium should help with thermal conductance at the Th window interface. The amount of He inside will be very small, so gas thermal expansion will not cause any significant pressure increase. Recall that the earliest BNL Th targets (a bolted design) were also sealed under He, which caused no problems.

The reason for this new submission is the new capsule design and increased thickness. Although the thickness is 8 times larger than previous targets, the irradiation duration will only be 4 hours, less than 2% of the length of previous irradiations. MCNPX and Microshield calculations are included. Doses will be modest. Inconel survives well in the BLIP beam, and has been used for many years as the window material of RbCl targets.

The irradiation is tentatively scheduled for mid July 2016. After irradiation the target capsule will be transported to the TPL hot cells by standard procedures. In the hot cell the capsule will be opened, the Th disk removed. Both the capsule and the Th disk will be closely inspected for evidence of any thermally induced damage. Photographs will be taken.

Formatted: Left

Formatted: Left

Formatted: Left

2. Target Material and Properties

Target Name:	*Th #14,15,16*	**Target & Canning No.** *Assign unique no.* (year-00x)	**BVV,BVW,BVX**

Target Material Properties (Thorium foil)				
Purity or Grade	99.5%			
Chemical Formula	Natural Thorium metal, FW=232.038			
Physical Characteristics at 70 ºF or 21 ºC	**Grey to black metal, odorless, tasteless, radioactive ($T_{1/2}$=1.4*10^{10} years)**			
Physical Form	**Foil**	**yes**	**Powder**	**no**
	Diameter (inches/mm)	**2.37/60.20**	**Pressed (Torr)**	**n/a**
Elements (%)	**99.5% Th, Al 500ppm, B 0.4, Ca 250, Cd 0.1, Cr 6, Cu 5, Fe 150, Li 0.1, Mg 10, Mn 13, Ni 5, Si 10, U 0.1, Cl 8, N 250, ppm**			
Melting Point	**1750**	**ºC**		**ºF**
Boiling Point	**4790**	**ºC**		**ºF**
Thermal Conductivity	**54 $W.m^{-1}.K^{-1}$**	**Temperature dependence**	***(if available)* n/a**	
Density	**11.7**		**g/cm^3**	
Specific Heat	**130**		**J/kg.K**	

Target Material Reactions / Properties						
Does the Target material react with any of the following?	**Aluminium**	**no**	**Air**	**no**	**CO_2**	**no**
	H_2O	**insoluble**	**Lead**	**no**	**Zinc**	**no**
	Inconel 625	**no**	**S/Steel**	**no**	**Copper**	**no**

Target Name:	*Th #17*	**Target & Canning No.** *Assign unique no.* BVZ	

Canning Material Properties				
Chemical Formula	**Inconel alloy 625 (Ni- 62%, Cr-21%, Mo-14%, Fe-4%)**			
Can Wall Thickness (inches/mm)	**Refer to drawing** attached in Appendix 5			
Can Dimensions (inches/mm)	**Can Diameter 2.745" Can Width 0.0786"**			
Melting Point	**1354-1413**	**ºC**	**1984**	**ºF**
Thermal Conductivity	**$W.m^{-1}.K^{-1}$ 20**	**Temperature dependence**	*(if available)* **12.6@200^{0}C, 20.8@760^{0}C**	
Density	**8.44**	**g/cm^3**		
Specific Heat	**410**		**J/Kg K**	

3. Target Canning Process

Blueprints: Attached in Appendix 5.

General considerations: Capsule fabrication will be performed by BNL central shops. An Inconel window will be electron beam welded onto an Inconel ring. A second Inconel window will also be fabricated but not welded. The capsule will be shipped to Sigma Group at LANL. At LANL the thorium disk (2.375" diameter x 0.120" thick, ~102g) will be placed into the Inconel capsule. The capsule will be sealed by TIG welding under helium. Leak testing will be performed at LANL and again at BNL as per standard CAD procedure OPM19.17.1, section 5.4.

4. Beam Characteristics

Maximum Instantaneous Current Desired	**52**	**mA**
Average Current Desired	**125-130**	**µA**
Total Integrated Current Desired	**520**	**µA - hrs**
Maximum Proton Energy on Target Material	**160**	**MeV**

5. Experiment Description

5.a Procedure for irradiation of target material in BLIP:

BLIP staff shall install and remove target and degraders in BLIP, as per CAD OPM 19.4.5.2. Irradiations are planned for 4 hours to achieve 520µAh. One hour after EOB raise the array into the hot cell. Disassemble array and move degraders to storage.

5.b Target array in Box 1 (upstream) and Box 2 (downstream):

Th target and degraders in Box 1, cGMP approved RbCl array in Box 2 with 0.220 inch Sc target as beamstop.

See **Appendix 1** for details of energy loss in these arrays.

5.c Thermal analysis of target material and target can (attach analyses if any):

See Appendix 2. No issues.

5.d Transport of irradiated target to TPL, target opening and processing:

Following irradiation the target capsule will be transported within 1-3 days to the TPL hot cells at staff convenience by BLIP staff as per CAD OPM 19.4.5.3. In the receiving hot cell the capsule will be cut

open. The Th disk removed, and the capsule and Th disk visually inspected for any issues of possible concern, such as hot spot burn marks, warping, etc.

5.e Disposal of waste:

Inconel target body will be disposed with other target bodies as solid non compactable waste as per CAD OPM 19.3.5.6 & 19.3.5.7. The Th disk will be stored for approximately 8 weeks and then disposed similarly. Alternatively, if it is thought useful to use this material for chemistry experiments later, a separate ESR will be submitted to cover that effort.

1. Activation Analysis of Target Material and Can

Nuclides and activities produced in the Th foils and Inconel capsule are shown in Appendix 4 at 1 hour post EOB:

Activation of Th foil, inconel capsule, and copper degrader was calculated using MCNPX/ORIGEN code for this irradiation at EOB was carried out by Albert Hanson (Nuclear Science and Technology Department of BNL). All these materials have been irradiated at BLIP previously in different target configurations.

See Appendix 4 for the radioisotope listing and calculated activation amounts.

7. Expected Dose Rate

Calculations of activation of the target array used MCNPX. The output was then organized into photons/sec by gamma ray energy bins. Calculations of dose rates at the operator location one foot from the exterior of the BLIP hot cell were carried out using Microshield 7.02 software using the gamma ray intensity tables. The MicroShield output is provided in **Appendix 3.** The predicted dose rate 1h post EOB at the operator location at BLIP hot cell for Th disk is 16.mR/h, for Cu degrader, is 19mR/h, and for the inconel capsule 18mR/h. It is noteworthy that the thin Th disk contributes little to the dose at early times.

Estimated personnel doses: Nalepa 3mR, Kurczak 5mR, Medvedev1mR, Conley 5mR.

8. Additional Safety Requirements

During target transport from BLIP to the TPL, an air tight metal vessel will be used to provide secondary containment of any radioactive gases that might be released from a leaking target. During target opening in the TPL, the acid scrubber will be turned on and the mobile self-supporting scrubber inlet tubing will be moved close to the target cutter in order to exhaust any volatile radioisotopes that might be released. There is no heat source used. Staff will visually monitor the radiation detector adjacent to the scrubber for

any increase during the target opening period.
Decay Requirements
Remove target arrays at one hour post EOB.

9. Special Operating Instructions	
None.	
Supporting Documentation	
References	
OPMs	19.2.22, 19.3.5.6, 19.3.5.7, 19.4.5.2, 19.4.5.3.
Drawings	

Appendix 1

Target Array and Energy Propagation Calculations

TITLE: _____

Target Array Number: TA_____

Preparer: _____

				thickness				
								2.76
7	Cu degrader	Cu	8.96	0.0785	1.99	151.62	145.13	6.50
8	vacuum	0	0.00	2.1490	54.58	145.13	145.13	0.00
9	Cu degrader	Cu	8.96	0.0785	1.99	145.13	138.09	7.04
10	water gap	water	1.00	0.2000	5.08	138.09	135.11	2.98
11	Th can window	Inconel	8.43	0.0200	0.51	135.11	133.36	1.75
12	Th metal puck	Th	11.70	0.1200	3.05	133.36	122.99	10.37
13	Th can window	Inconel	8.43	0.0200	0.51	122.99	121.13	1.87
14	water end of the box	water	1.00	0.3190	8.10	121.13	115.86	5.27
15	Front box back window	stainless steel	8.00	0.0200	0.5080	115.86	114.01	1.85
16	water gap between boxes windows	water	1.00	0.1500	3.8100	114.01	111.09	2.92
17	Back box front window	stainless steel	8.00	0.0200	0.5080	111.09	109.17	1.92
18	water gap	water	1.00	0.2000	5.0800	109.17	105.68	3.49
19	Stainless steel	stainless steel	8.00	0.0290	0.7366	105.68	102.79	2.89
20	vacuum	vacuum		0.5960	15.1384	102.79	102.79	0.00
21	Stainless steel	stainless steel	8.00	0.0290	0.7366	102.79	99.84	2.95
22	water gap	water	1.00	0.2000	5.0800	99.84	96.04	3.79
23	can window	inconel	8.43	0.0120	0.3048	96.04	94.84	1.21
24	RbCl salt	RbCl	2.20	0.646	16.3980	94.84	75.32	19.52
25	can window	inconel	8.43	0.0120	0.3048	75.32	73.52	1.80
26	water gap	water	1.00	0.2000	5.0800	73.52	69.45	4.06
27	can window	inconel	8.43	0.0120	0.3048	69.45	66.92	2.53
28	RbCl salt	RbCl	2.20	0.5000	12.7010	66.92	46.39	20.53
29	can window	inconel	8.43	0.0120	0.3048	46.39	43.93	2.46
30	water gap	water	1.00	0.2000	5.0800	43.93	36.05	7.88
31	Cu beam stop	Cu	8.96	0.2200	5.5880	36.05	stop	36.05
32	water gap	water	1.00	0.2280	5.7912	0.00	0.00	0.00

Appendix 2

Thorium Target Thermal Analysis

Chris Cullen

April 27, 2016

1

Conditions

- Steady state average current = 165 µA
- 199 MeV
- 1 Th target, (3) .20" water gaps, 22.5 gpm total
- 1881 Watts total (Th + inconel windows)
- Raster 12.5 mm / 5.5 mm (4:1)
- Beam 10.5 FWHM

2

Finite Element Model

- 2D Axi-symmetric model
- Inconel, .165" thick assembled
- (1) x .125" thick Thorium
- (1) x .020" thick Inconel window, upstream
- (1) x .020" thick Inconel window, downstream
- Steady-state analysis
- Laser welded target in Helium environment
- Steady state water cooling on exterior
- Internal heat generation for all bodies

3

Steady State Raster Particle Distribution

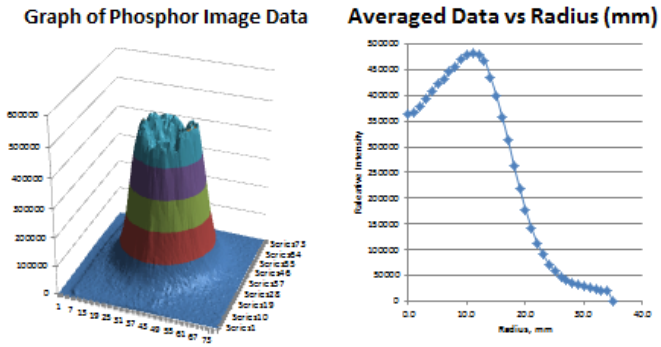

Ref 032516.xls

4

Finite Element Model

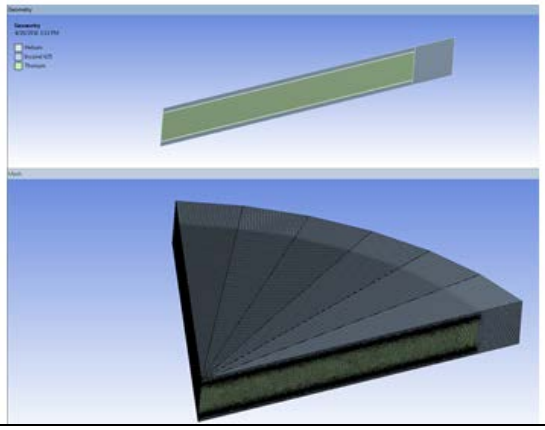

5

Finite Element Model

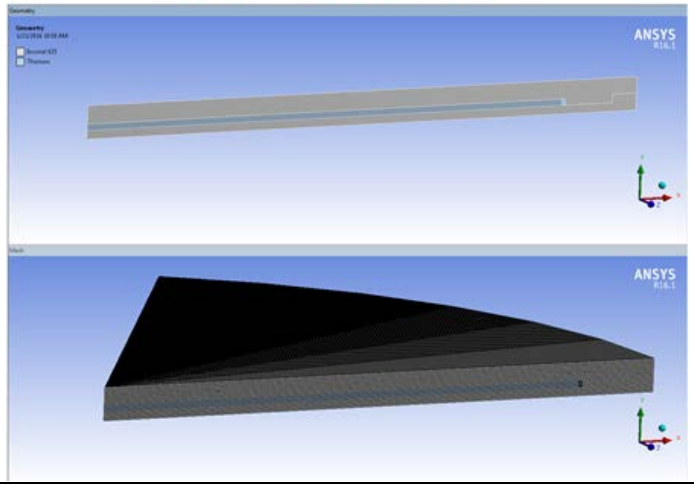

Target Temperature Profile

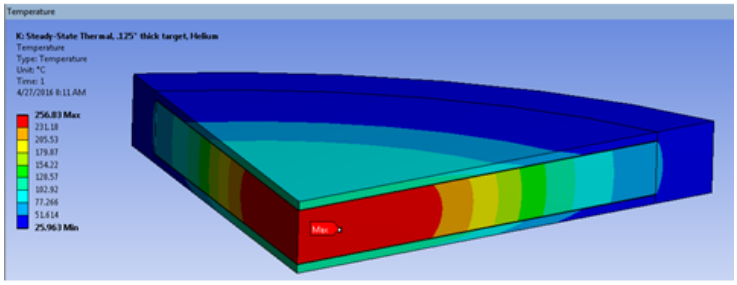

Summary & Conclusion

- Maximum Thorium temperature = 257 °C
- Maximum Inconel temperature = 129°C
- Maximum heat flux to water = 63 W/cm^2
- All values safe

7

<u>Additional contribution to target heating from fission of Th-232:</u> The Th target thickness is 1.36g/cm^2, proton fission cross section at 200 MeV is 1.1b (St. Laurent et al Nucl. Phys. A422, 307-326, 1984), proton flux 130μA, 200 MeV released per fission ~95 watts deposited. This is negligible compared to the direct proton heating.

Appendix 3

Comparison of the calculated dose rates for 160 **MeV 4h** irradiation of one d×h=2.375”×0.120” Th disk, Inconel capsule

Calculation methodology:

1) The dose rate to the operator at BLIP from Box 1 is comprised of the dose rate from:
   - Th target can (inconel); note that the Inconel windows for this target are thinner than the targets used recently for shipment to ORNL (0.024” vs 0.076”) and the irradiation is much shorter. Dose from Inconel will be much less than previous.
   - Th foil
   - Copper degrader positioned upstream of the Thorium can
2) Activation of Th foil is calculated using MCNPX-ORIGEN code in Appendix 4, Dose rate calculation carried out in Microshield 7.02 (Grove Engineering)
3) Dose calculation at BLIP assumes the following hot cell geometry:
   - Wall thickness: 0.5 inch SS/6 inches Pb/0.5 inch SS
   - Source point –inside the hot cell, 12 inches away from the interior wall
   - Dose point – outside the hot cell at 12 inches. Report is attached

Table 3.1 Calculation of the dose rate from the Th foil only to the BLIP operator station based on data in the Table A4.1.

MicroShield 7.02
BNL (7.02-0000)

Date	By	Checked

Filename	Run Date	Run Time	Duration
Th_BLIP_1h_EOB.ms7	June 14, 2016	4:10:26 PM	00:00:00

Project Info	
Case Title	Dose rate from Th
Description	101.9 g Th target 1h after EOB 4 h of 160 beam BLIP
Geometry	8 - Cylinder Volume - End Shields

Source Dimensions	
Height	0.305 cm (0.1 in)
Radius	3.043 cm (1.2 in)

Dose Points			
A	X	Y	Z
#1	0.0 cm (0.0 in)	78.74 cm (2 ft 7.0 in)	0.0 cm (0.0 in)

Shields			
Shield N	Dimension	Material	Density
Source	.541 in³	Thorium	11.72
Shield 1	12.0 in	Air	0.00122
Shield 2	.5 in	Stainless steel	8
Shield 3	6.0 in	Lead	11.34
Shield 4	.5 in	Stainless steel	8
Air Gap		Air	0.00122

Source Input: Grouping Method - User Defined Energies				
Group #	Energy (MeV)	Activity (Photons/sec)	Volume Source Photons/sec/cm³	% Energy Activity
1	0.005	7.8800e+010	8.8875e+009	0.011%

2	0.02	6.0300e+011	6.8010e+010	0.331%
3	0.045	1.0900e+011	1.2294e+010	0.135%
4	0.08	1.6100e+011	1.8158e+010	0.354%
5	0.15	5.2000e+011	5.8649e+010	2.141%
6	0.25	3.4700e+011	3.9137e+010	2.381%
7	0.4	7.2400e+011	8.1657e+010	7.949%
8	0.513	1.3900e+011	1.5677e+010	1.957%
9	0.638	1.0900e+012	1.2294e+011	19.087%
10	0.875	8.3600e+011	9.4289e+010	20.077%
11	1.17	3.7400e+011	4.2182e+010	12.010%
12	1.5	2.9000e+011	3.2708e+010	11.939%
13	1.83	1.2300e+011	1.3873e+010	6.178%
14	2.25	1.4500e+011	1.6354e+010	8.954%
15	2.75	5.4000e+010	6.0904e+009	4.076%
16	3.5	2.4400e+010	2.7520e+009	2.344%
17	4.5	6.1700e+008	6.9589e+007	0.076%
18	5.5	2.0400e+006	2.3008e+005	0.000%

Buildup: The material reference is Shield 3 Integration Parameters	
Radial	20
Circumferential	10
Y Direction (axial)	10

Results					
Energy (MeV)	Activity (Photons/sec)	Fluence Rate MeV/cm²/sec No Buildup	Fluence Rate MeV/cm²/sec With Buildup	Exposure Rate mR/hr No Buildup	Exposure Rate mR/hr With Buildup
0.005	7.880e+10	0.000e+00	4.459e-23	0.000e+00	2.733e-23
0.02	6.030e+11	0.000e+00	1.365e-21	0.000e+00	4.728e-23
0.045	1.090e+11	0.000e+00	5.948e-22	0.000e+00	1.978e-24
0.08	1.610e+11	1.131e-161	1.866e-21	1.790e-164	2.953e-24
0.15	5.200e+11	1.673e-141	2.752e-19	2.754e-144	4.531e-22
0.25	3.470e+11	3.410e-38	1.595e-20	6.291e-41	2.942e-23

0.4	7.240e+11	1.828e-11	4.480e-11	3.561e-14	8.730e-14
0.513	1.390e+11	1.461e-06	4.386e-06	2.868e-09	8.608e-09
0.638	1.090e+12	1.026e-02	3.428e-02	1.995e-05	6.665e-05
0.875	8.360e+11	3.399e+00	1.336e+01	6.393e-03	2.513e-02
1.17	3.740e+11	5.047e+01	2.169e+02	9.025e-02	3.879e-01
1.5	2.900e+11	2.798e+02	1.240e+03	4.707e-01	2.087e+00
1.83	1.230e+11	3.364e+02	1.513e+03	5.346e-01	2.405e+00
2.25	1.450e+11	8.545e+02	3.874e+03	1.273e+00	5.770e+00
2.75	5.400e+10	5.451e+02	2.450e+03	7.606e-01	3.419e+00
3.5	2.440e+10	3.775e+02	1.639e+03	4.879e-01	2.119e+00
4.5	6.170e+08	1.195e+01	5.306e+01	1.419e-02	6.302e-02
5.5	2.040e+06	4.111e-02	1.968e-01	4.577e-05	2.191e-04
Totals	**5.619e+12**	**2.459e+03**	**1.100e+04**	**3.637e+00**	**1.627e+01**

Appendix 4

Activation analysis of Th foil

Table A4.1 MCNPX calculated spectrum of radionuclides and their activity at EOB produced in a 0.120" x 2.375" OD Th disk upon bombardment with 133 MeV (160 MeV LINAC) protons for a total of 520µA.

Isotope	Z	Activity, Ci
ac	225	6.30E-02
ac	224	2.58E+00
ac	229	3.34E+00
ac	228	1.24E+00
ac	226	4.16E-01
ac	223	4.56E+00
ac	230	1.94E+00
ac	231	3.82E+00
ac	227	7.71E-05
ag	113	6.07E+00
ag	109m	1.79E+00
ag	111m	8.21E+00
ag	112	1.16E+00
ag	115	8.23E+00
ag	111	1.64E-01
ag	104	2.78E-01
ag	106	4.30E-01
ag	107m	3.98E-02
ag	103	5.60E-02
ag	102	3.62E-02
ag	105	1.05E-03
ag	101	8.34E-03
ag	116	9.49E+00
ag	114	9.07E+00
al	28	1.45E-03
al	29	6.58E-04
ar	41	8.22E-03
ar	44	1.40E-02
ar	43	1.27E-02
ar	37	7.22E-07
ar	42	1.39E-07
as	78	1.36E+00
as	77	1.08E-01
as	79	2.53E+00
as	76	2.53E-02
as	70	8.99E-03
as	72	4.05E-03
as	71	1.18E-03
as	74	7.72E-04
as	69	2.85E-03
as	73	1.30E-04
at	215	4.53E+00
at	216	2.69E-01
at	211	9.39E-02
at	217	7.11E-02
at	210	3.42E-02
at	209	1.51E-02
at	208	2.70E-03
au	201	2.41E-03
au	200	5.00E-04
au	193	3.51E-04
au	199	1.28E-04
au	202	9.55E-05
au	198	1.84E-05
au	194	1.49E-05
au	196	4.06E-06
au	195	1.63E-06
ba	139	3.47E+00
ba	141	2.88E+00
ba	129	2.62E-01
ba	142	2.74E+00
ba	140	3.68E-02
ba	126	1.62E-02
ba	131	5.27E-03
ba	128	4.00E-03
ba	127	5.18E-02
ba	136m	1.60E-03
ba	124	3.29E-03
ba	137m	4.55E-05
ba	133	2.41E-05
bi	211	4.54E+00
bi	212	1.99E-01
bi	210	1.11E-01
bi	213	5.25E-02
bi	206	4.98E-05
bi	214	2.25E-04
bi	205	2.53E-06
bi	204	2.13E-06
bi	207	2.05E-07
bi	215	4.98E-07
br	83	4.54E+00
br	84	8.08E+00
br	82	2.21E-01
br	80	6.07E-01
br	76	4.22E-02
br	75	1.96E-02
br	77	6.61E-03
br	74	3.07E-02
br	78	1.59E-01
br	85	3.57E+00
br	84m	9.27E-04
ca	47	7.50E-04
ca	49	1.58E-02

ca	45	1.48E-05
cd	117	6.05E+00
cd	118	7.26E+00
cd	115	6.44E-01
cd	117m	4.97E-01
cd	107	3.98E-02
cd	105	1.94E-02
cd	111m	6.92E-03
cd	104	1.57E-02
cd	115m	1.21E-03
cd	109	8.49E-05
cd	103	4.17E-03
cd	113m	1.26E-06
cd	119	5.52E+00
cd	102	8.78E-04
ce	143	2.87E-01
ce	137	1.53E-01
ce	146	2.32E+00
ce	133	1.15E-01
ce	135	5.38E-02
ce	132	1.37E-02
ce	141	6.28E-03
ce	134	3.68E-03
ce	144	1.48E-03
ce	139	7.24E-04
ce	130	3.94E-03
ce	131	1.12E-02
ce	145	2.45E+00
cl	39	7.71E-03
cl	38	4.38E-03
co	61	1.79E-01
co	55	4.49E-04
co	58	1.71E-05
co	56	4.52E-06
co	57	3.47E-06
co	60	2.62E-06
cr	49	1.94E-03
cr	48	1.06E-04
cr	56	9.70E-02

cr	51	2.15E-05
cr	55	8.51E-02
cs	138	3.99E+00
cs	130	6.81E-01
cs	127	8.68E-02
cs	129	4.69E-02
cs	139	3.08E+00
cs	125	6.08E-02
cs	136	1.43E-02
cs	132	1.34E-02
cs	126	1.10E-01
cs	131	8.72E-03
cs	128	2.24E-01
cs	134	1.99E-04
cs	124	4.85E-02
cs	137	4.79E-05
cs	123	3.55E-02
cu	67	1.80E-02
cu	66	7.48E-02
cu	64	5.59E-03
cu	61	3.42E-03
cu	62	1.14E-02
cu	60	3.29E-03
cu	69	4.50E-01
dy	165	9.41E-02
dy	157	1.45E-02
dy	166	3.27E-03
dy	155	2.51E-03
dy	152	7.57E-04
dy	153	6.18E-04
dy	168	5.88E-02
dy	167	7.02E-02
dy	159	6.99E-05
dy	151	6.58E-04
dy	150	2.19E-04
er	171	1.84E-02
er	163	1.50E-02
er	167m	7.39E-03
er	165	5.90E-03

er	161	3.87E-03
er	172	2.45E-03
er	169	1.10E-03
er	159	1.52E-03
er	160	2.84E-04
er	158	3.11E-04
eu	158	2.34E-01
eu	157	5.25E-02
eu	159	1.76E-01
eu	156	1.22E-03
eu	146	3.67E-04
eu	145	2.28E-04
eu	147	1.59E-04
eu	148	8.73E-05
eu	149	8.45E-05
eu	155	3.80E-05
eu	154	1.27E-05
eu	152	8.66E-06
eu	150	2.61E-06
eu	152m	2.65E-07
fe	59	3.73E-04
fe	52	3.12E-04
fe	61	1.79E-01
fe	53	1.54E-03
fe	55	6.11E-07
fr	219	4.53E+00
fr	220	2.69E-01
fr	221	7.11E-02
fr	223	8.56E-03
fr	212	7.68E-03
fr	222	7.05E-03
fr	225	1.01E-02
ga	73	4.74E-01
ga	72	3.17E-02
ga	68	3.29E-02
ga	70	8.47E-02
ga	74	1.20E+00
ga	66	3.56E-03
ga	67	1.05E-03

ga	65	5.49E-03
gd	159	3.37E-02
gd	164	7.01E-02
gd	162	1.10E-01
gd	147	3.34E-04
gd	145	1.54E-03
gd	149	1.70E-04
gd	151	3.24E-05
gd	153	2.42E-05
gd	146	4.38E-06
gd	161	1.38E-01
ge	78	1.49E+00
ge	75	1.29E+00
ge	73m	4.68E-01
ge	77	1.90E-01
ge	69	1.71E-03
ge	66	2.17E-03
ge	71	8.90E-04
ge	67	3.95E-03
ge	68	6.46E-06
h	3	2.54E-05
hf	183	1.30E-02
hf	184	5.80E-03
hf	173	1.52E-04
hf	171	1.35E-04
hf	170	6.98E-05
hf	181	6.39E-05
hf	175	8.89E-06
hf	172	1.48E-07
hg	206	8.78E-04
hg	203	1.63E-06
hg	205	6.58E-04
ho	167	6.42E-02
ho	161	3.34E-02
ho	160	8.02E-02
ho	164	5.93E-02
ho	159	3.42E-02
ho	166	5.77E-03
ho	162	5.27E-02

ho	156	2.91E-03
ho	158	3.43E-02
ho	168	1.05E-01
ho	155	1.49E-03
ho	157	3.29E-03
ho	154	2.63E-03
ho	169	6.32E-02
i	134	3.71E+00
i	135	1.07E+00
i	132	1.15E+00
i	133	8.36E-01
i	130	6.81E-01
i	128	1.03E+00
i	131	9.53E-02
i	121	1.34E-01
i	123	8.60E-02
i	120	8.76E-02
i	133m	3.13E-02
i	124	1.30E-02
i	122	2.33E-01
i	126	6.88E-03
i	119	4.83E-02
i	118	3.77E-02
i	125	1.54E-03
i	132m	2.57E-03
in	117	5.47E+00
in	117m	2.94E+00
in	118	1.12E+01
in	119m	4.97E+00
in	115m	1.65E-01
in	110	1.46E-01
in	109	1.45E-01
in	108	2.38E-01
in	112	5.37E-01
in	111	1.93E-02
in	119	5.28E+00
in	107	3.88E-02
in	113m	2.05E-04
in	121m	4.80E+00

in	106	2.94E-02
in	116m	5.12E-06
in	121	4.00E+00
in	105	1.10E-03
ir	195	3.82E-03
ir	196	6.33E-03
ir	187	5.60E-04
ir	186	3.70E-04
ir	190	7.49E-05
ir	194	5.92E-05
ir	188	1.42E-05
ir	192	4.12E-06
ir	197	2.41E-03
ir	189	1.91E-06
k	44	1.84E-02
k	43	1.88E-03
k	45	1.89E-02
k	42	6.17E-04
k	38	4.39E-04
kr	83m	2.51E+00
kr	87	4.34E+00
kr	88	3.20E+00
kr	85m	1.64E+00
kr	79	2.60E-02
kr	77	2.35E-02
kr	76	1.69E-03
kr	85	1.03E-04
kr	74	1.76E-03
kr	89	3.96E+00
kr	75	2.85E-03
la	142	3.00E+00
la	141	2.01E+00
la	143	2.90E+00
la	133	1.47E-01
la	132	1.48E-01
la	135	7.02E-02
la	140	5.78E-02
la	131	8.56E-02
la	136	7.57E-01

la	134	2.79E-01
la	130	3.95E-02
la	129	4.26E-02
la	128	6.80E-03
lu	178	5.04E-02
lu	179	1.26E-02
lu	177	6.59E-04
lu	170	3.34E-04
lu	169	2.40E-04
lu	172	2.21E-04
lu	171	1.14E-04
lu	167	2.11E-04
lu	180	2.08E-02
lu	173	2.70E-06
lu	168	2.85E-03
lu	174	1.11E-06
lu	181	1.69E-02
mg	28	1.36E-04
mg	27	8.78E-04
mn	56	7.47E-02
mn	51	1.92E-03
mn	52	5.28E-04
mn	54	3.09E-06
mo	99	3.31E-01
mo	101	5.22E+00
mo	102	7.72E+00
mo	90	9.08E-03
mo	91	7.28E-02
mo	88	1.97E-03
na	24	7.56E-05
nb	97	3.95E+00
nb	97m	9.65E-01
nb	89	2.07E-01
nb	90	1.35E-01
nb	96	1.30E-01
nb	95	1.10E-02
nb	88	4.65E-02
nb	98m	2.01E-05
nb	95m	1.91E-06

nb	91	2.75E-07
nb	99m	1.15E+00
nd	149	1.12E+00
nd	141	2.71E-01
nd	151	8.27E-01
nd	147	2.43E-02
nd	139	7.98E-02
nd	152	6.16E-01
nd	138	1.42E-02
nd	137	3.44E-02
nd	140	5.21E-03
nd	136	9.50E-03
nd	135	3.29E-03
nd	134	4.39E-04
ni	65	9.62E-02
ni	66	1.60E-02
ni	57	9.85E-05
ni	56	2.06E-05
ni	63	8.27E-07
os	196	3.48E-03
os	193	2.85E-04
os	191	6.16E-05
os	195	2.63E-03
os	185	5.41E-07
p	33	6.97E-06
p	32	5.31E-06
pa	233	2.30E-01
pa	227	7.39E-01
pa	229	2.37E-01
pa	228	1.65E-01
pa	232	1.04E-01
pa	230	2.35E-02
pa	234	3.27E-06
pb	209	7.76E-01
pb	212	5.54E-03
pb	211	3.12E-03
pb	210	5.84E-05
pb	214	5.39E-06
pd	109	1.79E+00

pd	111	8.27E+00
pd	112	1.12E+00
pd	101	1.67E-02
pd	103	1.36E-03
pd	99	9.43E-03
pd	100	1.02E-03
pd	98	4.83E-03
pd	114	7.55E+00
pm	151	1.03E-01
pm	150	1.34E-01
pm	149	5.16E-02
pm	152	1.47E+00
pm	148	9.69E-03
pm	142	8.62E-02
pm	141	3.64E-02
pm	153	5.81E-01
pm	143	6.83E-05
pm	140	3.77E-02
pm	144	4.04E-05
pm	147	3.51E-05
pm	146	1.11E-05
pm	145	3.54E-06
pm	139	8.78E-03
pm	152*	2.08E-06
po	214	5.10E+00
po	212	8.20E-01
po	216	5.75E-02
po	213	1.44E+00
po	211	2.95E-01
po	215	4.01E-03
po	207	2.04E-04
po	210	2.56E-04
po	206	3.15E-05
po	208	1.12E-05
po	218	6.53E-06
po	209	4.54E-07
pr	145	1.13E+00
pr	146	2.77E+00
pr	144	2.74E+00

pr	139	1.42E-01
pr	147	1.98E+00
pr	142	8.82E-02
pr	137	1.03E-01
pr	138	3.59E-01
pr	136	5.32E-02
pr	143	6.38E-03
pr	135	2.72E-02
pr	140	3.20E-01
pr	134	7.46E-03
pr	144m	2.11E-05
pr	133	6.14E-03
pt	200	3.93E-04
pt	197	3.35E-04
pt	199	1.09E-03
pt	202	9.55E-05
ra	222	5.10E+00
ra	227	3.44E-01
ra	224	5.73E-02
ra	230	9.70E-02
ra	221	1.38E+00
ra	223	4.01E-03
ra	225	3.31E-03
ra	228	2.00E-05
ra	229	1.80E-01
ra	226	1.11E-07
rb	88	4.65E+00
rb	89	5.79E+00
rb	81	6.76E-02
rb	86	7.94E-03
rb	80	5.45E-02
rb	79	2.02E-02
rb	78	2.87E-02
rb	84	2.45E-03
rb	83	4.79E-04
rb	82	4.04E-01
rb	90m	4.28E-01
rb	90	6.81E+00
re	189	1.09E-03

re	190	8.10E-03
re	188	6.29E-04
re	182	1.49E-04
re	186	1.39E-04
re	191	5.27E-03
re	179	6.58E-04
re	181	5.68E-05
re	184	1.27E-05
re	183	3.26E-06
rh	107	7.19E+00
rh	105m	8.64E-01
rh	105	3.76E-01
rh	100	4.37E-02
rh	103m	1.53E-02
rh	97	3.80E-02
rh	99	2.27E-03
rh	106	3.29E+00
rh	98	6.80E-02
rh	108	6.90E+00
rh	96	2.72E-02
rh	101	4.83E-05
rh	106m	6.39E-05
rh	102	3.43E-05
rh	95	4.17E-03
rn	218	5.10E+00
rn	220	5.75E-02
rn	212	1.01E-01
rn	217	1.39E+00
rn	219	4.01E-03
rn	211	3.72E-03
rn	210	4.22E-03
rn	222	6.53E-06
ru	105	3.04E+00
ru	103	2.12E-02
ru	95	2.47E-02
ru	97	5.14E-03
ru	94	9.26E-03
ru	106	2.04E-03
ru	108	5.42E+00

ru	107	5.52E+00
s	38	3.42E-03
s	35	4.34E-06
s	37	4.83E-03
sb	129	2.63E+00
sb	128m	2.43E+00
sb	130	3.43E+00
sb	128	8.93E-01
sb	131	2.77E+00
sb	117	2.59E-01
sb	127	1.81E-01
sb	126	7.21E-02
sb	120	9.39E-01
sb	119	5.63E-02
sb	116	4.17E-01
sb	122	5.29E-02
sb	115	1.47E-01
sb	124	1.11E-02
sb	130m	1.87E+00
sb	118	6.22E-01
sb	125	6.52E-04
sb	114	5.64E-02
sb	113	3.05E-02
sb	132	8.54E-01
sb	132m	1.09E+00
sb	126m	1.77E-06
sc	49	3.01E-02
sc	44	1.00E-03
sc	43	8.94E-04
sc	48	4.32E-04
sc	47	1.84E-04
sc	46	9.37E-06
se	81	5.66E+00
se	83	3.86E+00
se	79m	2.50E+00
se	81m	7.82E-02
se	73	1.43E-02
se	70	2.80E-03
se	77m	3.44E-04

se	72	1.98E-04
se	75	7.99E-05
se	84	6.76E+00
se	71	2.63E-03
si	31	5.73E-04
sm	156	8.00E-02
sm	155	4.17E-01
sm	153	5.53E-02
sm	142	1.05E-02
sm	157	2.02E-01
sm	143	4.26E-02
sm	141	5.27E-03
sm	158	1.66E-01
sm	140	8.78E-04
sm	145	1.70E-05
sm	151	7.71E-07
sn	127	2.60E+00
sn	123m	5.24E+00
sn	128	2.43E+00
sn	121	1.14E+00
sn	125m	4.02E+00
sn	125	4.43E-02
sn	111	3.96E-02
sn	110	1.21E-02
sn	123	3.19E-03
sn	109	9.21E-03
sn	129m	3.36E-01
sn	113	3.98E-04
sn	127m	3.03E+00
sn	117m	9.49E-05
sn	108	3.07E-03
sn	130	1.87E+00
sn	119m	1.92E-05
sn	121m	2.60E-06
sr	92	3.60E+00
sr	91	1.52E+00
sr	83	2.94E-02
sr	89	1.59E-02
sr	93	4.45E+00

sr	80	7.11E-03
sr	81	2.11E-02
sr	85	1.14E-03
sr	82	2.91E-04
sr	90	1.01E-04
ta	185	9.33E-03
ta	184	1.82E-03
ta	180	1.83E-03
ta	176	5.73E-04
ta	183	3.41E-04
ta	175	2.45E-04
ta	186	9.21E-03
ta	177	1.24E-04
ta	174	1.98E-04
ta	173	1.29E-04
ta	178	5.93E-03
ta	182	1.08E-05
ta	179	2.01E-06
ta	187	1.03E-02
tb	163	1.32E-01
tb	164	1.15E-01
tb	154	1.07E-02
tb	162	1.65E-01
tb	151	4.05E-03
tb	161	3.44E-03
tb	150	3.22E-03
tb	156	2.38E-03
tb	149	1.93E-03
tb	152	1.61E-03
tb	153	1.06E-03
tb	155	8.89E-04
tb	147	1.79E-04
tb	148	2.06E-04
tb	160	9.25E-05
tb	158	2.72E-07
tb	157	1.51E-07
tc	101	6.47E+00
tc	104	6.00E+00
tc	102	1.11E+01

tc	94	1.29E-01
tc	99m	5.83E-02
tc	95	5.11E-02
tc	93	3.94E-02
tc	105	5.26E+00
tc	96	1.21E-02
tc	92	1.03E-02
te	129	4.49E+00
te	131	5.90E+00
te	134	2.54E+00
te	127	8.72E-01
te	133	4.63E+00
te	133m	3.02E-01
te	132	1.20E-01
te	119	7.25E-02
te	117	7.75E-02
te	116	2.92E-02
te	131m	1.67E-02
te	121	4.90E-03
te	118	3.74E-03
te	129m	8.97E-04
te	114	6.58E-03
te	115	3.53E-02
te	127m	1.57E-05
te	125m	1.49E-07
th	233	5.39E+01
th	231	2.58E+00
th	226	4.80E+00
th	227	3.73E-02
th	225	1.33E+00
th	228	1.98E-03
th	232	1.12E-05
th	229	4.86E-07
ti	45	7.81E-04
ti	51	4.34E-02
tl	207	4.53E+00
tl	208	7.16E-02
tl	209	1.54E-03
tl	200	2.21E-05

tl	206	8.78E-04
tm	173	1.42E-02
tm	175	3.31E-02
tm	166	2.35E-03
tm	163	2.75E-03
tm	165	1.08E-03
tm	172	8.48E-04
tm	167	2.99E-04
tm	164	6.09E-03
tm	161	6.50E-04
tm	162	1.10E-03
tm	174	4.10E-02
tm	168	1.96E-05
tm	170	1.69E-05
tm	171	5.48E-06
u	233	2.37E-08
u	230	6.19E-06
u	232	2.40E-07
v	47	1.74E-03
v	48	2.41E-05
v	52	1.16E-01
v	49	1.93E-06
w	179	4.34E-03
w	187	1.47E-03
w	190	3.93E-03
w	177	3.11E-04
w	189	7.02E-03
w	175	2.18E-04
w	185	1.91E-05
w	183m	1.70E-05
w	188	1.24E-05

w	181	2.33E-06
w	178	1.17E-06
xe	135	1.09E+00
xe	135m	1.68E-01
xe	138	2.76E+00
xe	133	8.40E-02
xe	125	7.07E-02
xe	123	7.79E-02
xe	121	2.53E-02
xe	127	8.51E-03
xe	122	8.19E-03
xe	120	1.02E-02
xe	133m	6.33E-04
xe	137	2.54E+00
xe	131m	4.55E-06
xe	119	3.29E-03
xe	118	1.10E-03
y	92	2.02E+00
y	93	2.00E+00
y	91m	6.45E-01
y	94	5.50E+00
y	85	2.07E-01
y	95	4.61E+00
y	90	5.12E-02
y	86	3.34E-02
y	89m	2.30E-02
y	87	2.09E-02
y	91	8.36E-03
y	93m	1.54E+00
y	88	7.94E-04
y	84	5.68E-02

y	83	3.47E-02
yb	177	3.68E-02
yb	178	1.96E-02
yb	175	1.28E-03
yb	167	5.70E-03
yb	164	3.90E-04
yb	166	1.99E-04
yb	179	1.76E-02
yb	169	1.05E-04
yb	162	2.19E-04
yb	163	4.39E-04
yb	165	6.58E-04
zn	69	7.13E-01
zn	72	4.06E-02
zn	63	7.58E-03
zn	62	8.51E-04
zn	65	1.26E-05
zr	97	1.02E+00
zr	87	1.05E-01
zr	89	2.31E-02
zr	95	1.09E-02
zr	86	7.16E-03
zr	84	3.94E-03
zr	88	3.45E-04
zr	85	1.36E-02

Estimation of U-233 production

Radioisotope U-233 can be produced in the foil by the Th-232 (n,γ) Th-233(22.3 min, β-)→ Pa-233(27.4 d, β-)→U-233. The indirect production of U-233 was calculated using MCNPX code for this 4 hour irradiation at 130μA at 133 MeV on a Th foil. The total yield of U-233 was found to be ~23nCi total at EOB. Fission of U-233 is also not included in the fission fragment heating calculation above due to its insignificant contribution. At EOB the U-233 mass from this irradiation is only 2 μg (~5.6 x10^{15} atoms). To fission these nuclei must interact with a proton just as the Th-232 nuclei (~2.4x10E21 atoms) do. The proton fission cross section of U-233 is 1.6 barn at these energies (Kotov et al, Physical Review, Part C, Nuclear Physics Vol.74, p.034605) vs 1.1 barn for Th-232. Hence, the contribution to heat from U-233 fission is many orders of magnitude less than from the Th fission discussed above in Appendix 2.

Production of noble gases

A total of ~1.5-2.5Ci of radioactive noble gases, radiobromines and radioiodines are predicted to be present in the single Th disk (0.120" thick) at time of transport from BLIP to building 801 (~1-3d post EOB). In the extremely unlikely event of a serious transport accident involving ejection of the target from the cask, subsequent capsule penetration, followed by a fire, and assuming 100% release of volatiles (also unlikely because the melting point of thorium is much higher than flame temperature), the maximum dose at the site boundary will be no more than 30μR (proportionally scaled from previous H. Kahnhauser calculation). Since the Th disk is placed intact in a capped glass vessel soon after opening the target capsule and performing visual inspection, and there is no heat source, it is not likely that any of these products are driven out of the disk and released during handling of the Th. In none of the previous 16 thorium target irradiations has any release of gaseous radioactivity been detected.
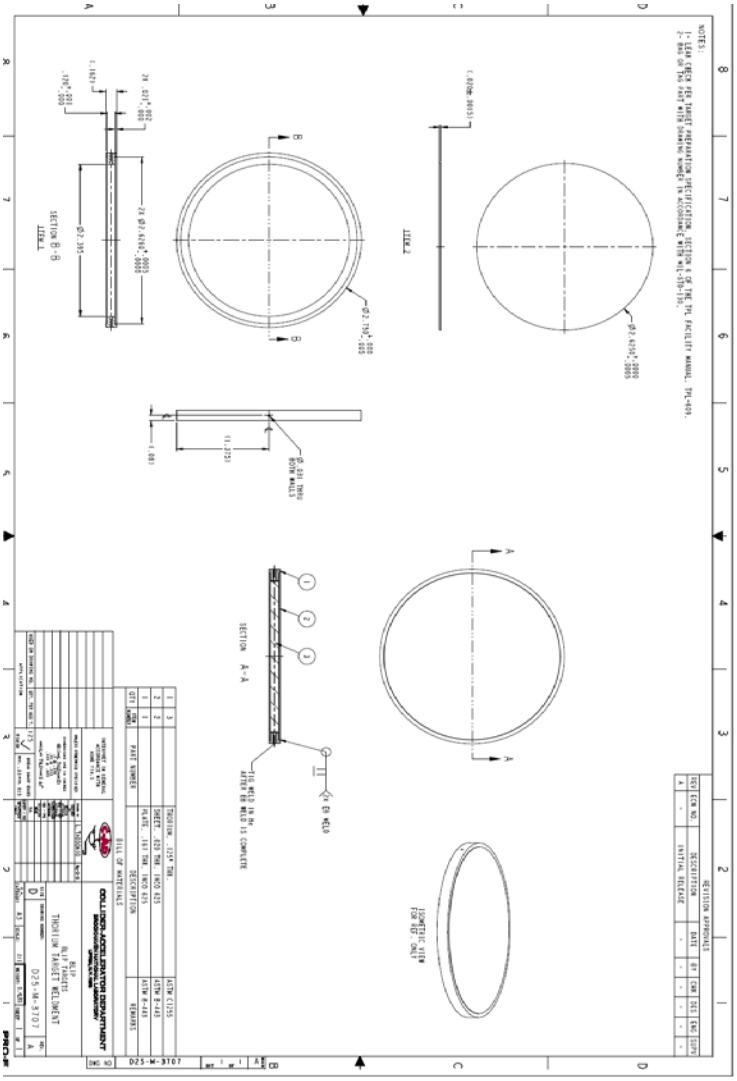
Appendix 5. Drawing of the assembled Th target with Inconel capsule.