23 July 2015 – Version 1

To: Dana Beavis
Cc: Ed Lessard, C Cullen, C Cutler

From: Suzanne Smith

Commercial in Confidence

Subject : Irradiation of GAW As target in Brass Copper Target Can

I would like to conduct an irradiation of a Gallium Arsenide (GAW) target within a brass copper (BsCu_2) can with 24.5 MeV protons at 115 uA on Thursday 30 July or Friday 31 July.

Background

Brass Copper Marc II (Bs-Cu-2) Target Can Details

The BsCu-_2 can (Marc II) is similar in design to the BsCu_1 successfully tested in the BLIP beam in July 2013 (see details of safety submission July 2013 by Smith attached). In summary, rational for the Brass Copper target cans is to enhance thermal conductivity and to simplify closing and opening of the target cans. A PLC automated can opener has been designed and fitted in hot-cell No.1 to open the BsCu cans at the TLP.

The difference in the BsCu_2 can design is the size of the target area and thickness of the copper back. The current BsCu_2 can has been cut away at further 0.14 inch to enhance cooling and to meet the new safety requirements recently implemented of lower delta energy in irradiated materials. See Figure 1a to d for details.

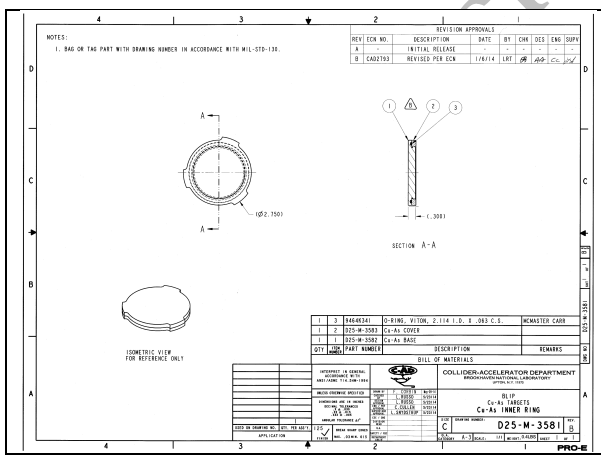

Figure 1a Top and Side View of Brass Copper Can Marc (II)

Commercial in Confidence

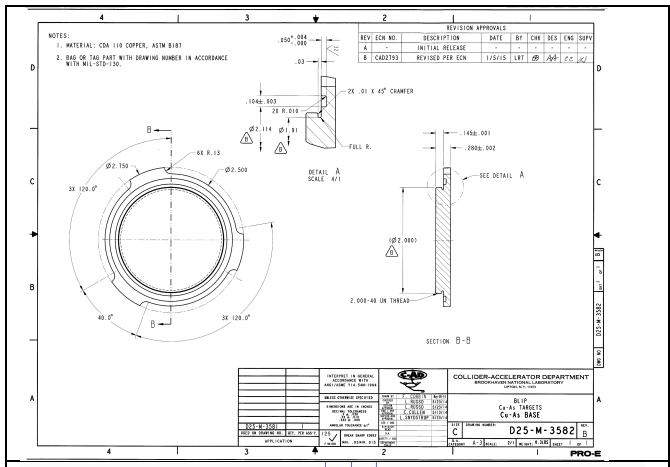

Figure 1b Enlarge View of Brass Copper Can Back recently modified to reduce thickness in back of can (see figure 1d)

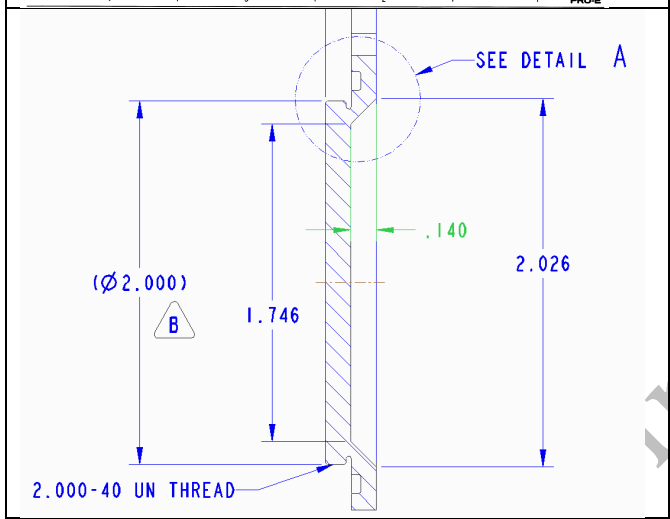

Figure 1c Details of cutter-away from Brass Copper Can Back. Note the target face area is 1.746 inch in diameter. GAW target is cut to 1.70 inch in diameter.

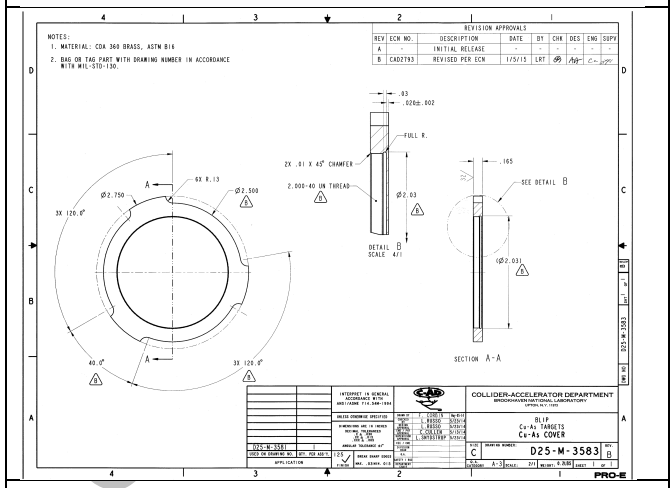

Figure 1d Enlarge view of Brass Copper Can Front

Stability of GAW target in BLIP beam.

We have irradiated the GAW target under a number of conditions (similar energy and variation of current and percentage of beam on target) over the last year. Recently we gained safety approval to irradiate the GAW target at **70 uA with 100% beam on target of <u>1.1 inch diameter</u>** for 3 hours. For this study, the safety committee requested that

additional safety requirements be placed on thermal analysis and the results are given in Figure 2 (see safety submission 18 June 2015 Rev 2 attached). The test of the GAW target was successfully carried out on the 19 June and the target held up to these conditions, showing no signs of damage. The entry energy for the GAW target was 49.6 MeV (as per SRIM calculations) and delta was 1.6 MeV.

70 µA, 1050 W total

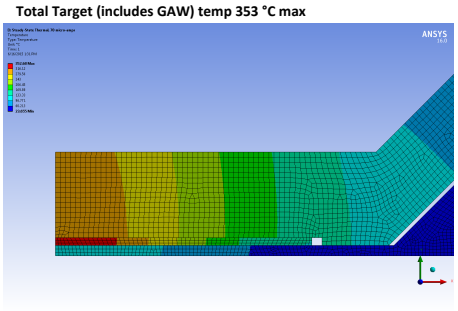

Figure 2a) *Thermal model show that the target (GAW and Aluminium can) is acceptable reaching max temp of 353 °C. Well below the GAW melting point of 1238°C and Aluminium melting point of 660.3 °C.*

70 µA

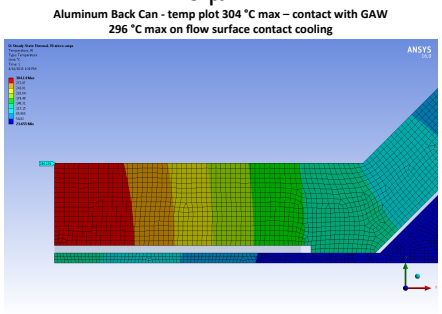

b) Aluminium can (back) in contact with GAW target reaches 304 °C.

70 µA

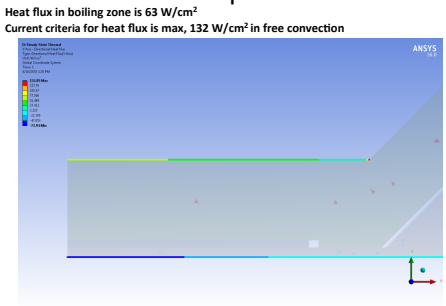

c) Heat flux on boiling is 63 W/cm^2 well within the recently defined limit of 132 W/cm^2.

Figure 2. Thermal model for GAW target (1.1 inch diameter) at 70 uA in aluminium target.

Copy in Confidence

Current study

The current proposal is to irradiate a GAW target of 1.70 inch diameter and 0.021 inch thickness at 24.5 MeV with a current of 115 uA. The target array is given in Table 1. Because the target is 1.7 inch in diameter and the beam spread is 154% greater target area compared to that of the 1.1 inch, it can tolerate even greater current than previously used.

The GAW will be placed behind the standard set of RbCl targets and the vacuum degrader replaced with stainless steel degrader previously approved in other target arrays. The target assembly will contain four targets with five 0.2 inch water gaps. The GAW BsCu_2 can will be closed using standard conditions: under helium and leak tested prior to irradiation.

Table 1 GAW-4 Target Array – GAW in BsCu_2 target can placed behind RbCl targets.

layer number	Layer	Material	inches	mm	Ei	Eout	δ E
			thickness		MeV	MeV	
1	Window 1	Beryllium	0.012	0.305	116.4	116.1	0.3
2	Window 2	AlBeMet	0.012	0.305	116.1	115.7	0.3
3	Beam Line Window	Stainless Steel	0.031	0.787	115.7	112.9	2.9
4	Water Gap	Water	0.106	2.692	112.9	111.1	1.8
5	Box Window	Stainless Steel	0.020	0.508	111.1	109.1	1.9
6	Water Gap	Water	0.200	5.080	109.1	105.6	3.6
7	**SS Degrader**	Stainless Steel	0.058	1.473	105.6	99.7	5.9
8	Water Gap	Water	0.200	5.080	99.7	96.0	3.8
9	Target Front	Inconel 600	0.012	0.305	96.0	94.6	1.4
10	**RbCl Target 1**	RbCl	0.646	16.410	94.6	73.1	21.5
11	Target Back	Inconel 600	0.012	0.305	73.1	71.4	1.7
12	Water	Water	0.200	5.080	71.4	66.4	5.0
13	Target Front	Inconel 600	0.012	0.305	66.4	64.6	1.8
14	**RbCl Target 2**	RbCl	0.500	12.700	64.6	41.1	23.5
15	**Target Back**	Inconel 600	0.012	0.305	41.1	38.5	2.6
16	Water Gap	**Water**	**0.200**	**5.080**	38.5	29.7	8.8
17	Brass can window	Brass	0.020	0.508	29.7	24.5	5.2
18	**GAW**	GAW	0.021	0.533	24.5	20.6	3.9
19	Copper can back	Copper	0.119	3.023	20.6	0.0	20.6
20	Can Water Gap	Water	0.140	3.566	0.0	0.0	0.0
21	Water Gap	Water	0.200	5.080	0.0	0.0	0.0
21	Aluminum Shaped Degrader	Aluminum	0.354	8.992	0.0	0.0	0.0

Commercial in confidence

Isotopes production and doses from the targets

The isotope produced from irradiation of GAW target were originally calculated for conservative scenarios (100% beam on target and 100% target content at 50 MeV).

The last irradiation, which had 3 hours of beam on target in an aluminum target, was safe to transport to TPL within the BLIP transport cask within 24 hour of exposure.

In the present study the radioisotopes produced will be slightly different but the dose levels will be considerably lower than that of a typically Ga target in Inconel can and the thorium target in a copper can as well as the GAW run at 50 MeV for 3 hours.

The primary isotopes that are expected to be produced during the proposed irradiation are ^{67}Ga, ^{68}Ge, ^{69}Ge, ^{68}Ga ^{70}Ga, ^{73}Se, ^{75}Se. For this study we will evaluate dose from the irradiated GAW target at BLIP and if at acceptable levels transport the target to TPL directly after irradiation, otherwise allowed it to decay for 24 hour in the BLIP hot cell and then transported to the TPL.

Thermal analysis of GAW target

Chris Cullen conducted the thermal analysis and the report is attached. The condition assessed is for 115 uA on a 1.7 inch diameter target for 3 hours, delta E of 3.9 MeV deposited in GAW target. The maximum temperature of the GAW target is estimated to reach 463 ^{o}C (melting pt for GAW is 1238 ^{o}C), the copper can back reaching 343 ^{o}C (melting pt of copper back material is 1084 ^{o}C) and well below their respective melting points.

The conclusion was that the GAW target would be safe to irradiation under the conditions proposed.

Commercial in Confidence