Thermal Analysis of GaAs Target in Bolted Aluminum Target Holder

Chris Cullen

January 26, 2016

Finite Element Model

- 2D Axi-symmetric model
- Aluminum Target Holder
- Steady-state analysis
- 22.5 gpm total cooling water flow
- five targets & six water gaps in array
- Gaussian Internal heat generation
- Thermal resistance = 2000 W/m^2*°C at all foil contact interfaces

Conditions

- Pulse width = 0.000450 sec
- Pulse Frequency = 6.667 Hz
- 116.28 MeV
- 70 μA
- Gaussian Beam Distribution – FWHM=10.0 mm, FWTM=18.1 mm, 100% on target
  - This is an assumed beam is for analysis only. It is tighter (more conservative) than Linac operating conditions.

Finite Element Model

Geometry & Mesh

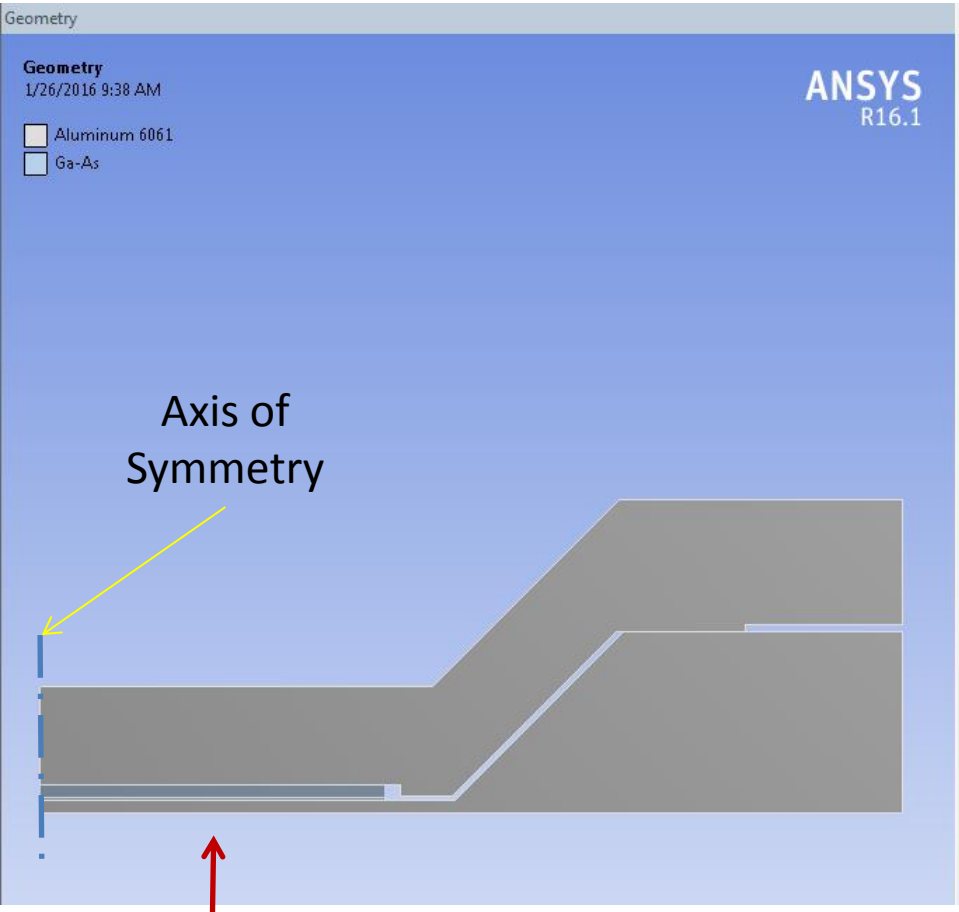

Axis of Symmetry

Beam Direction

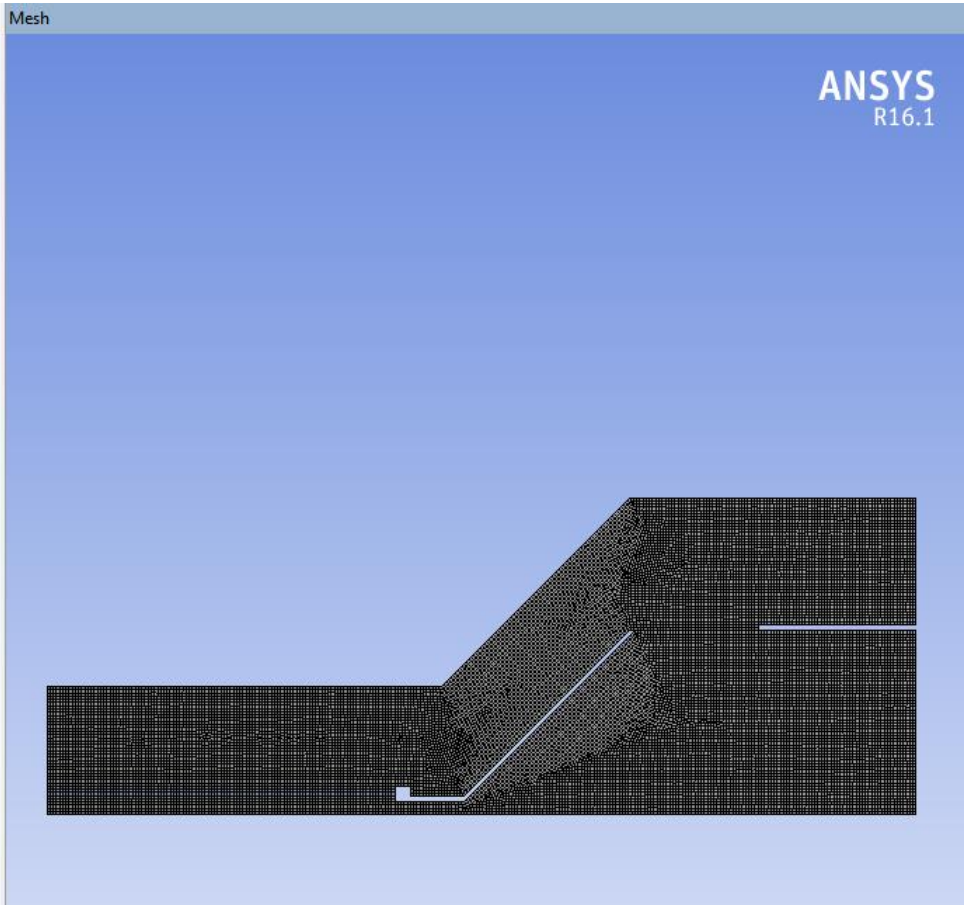

116.38 MeV, 70 μa – GaAs 1.1 inch target in Aluminum Holder

Total Target (includes GAW)
Temp 250°C max (in GAW)

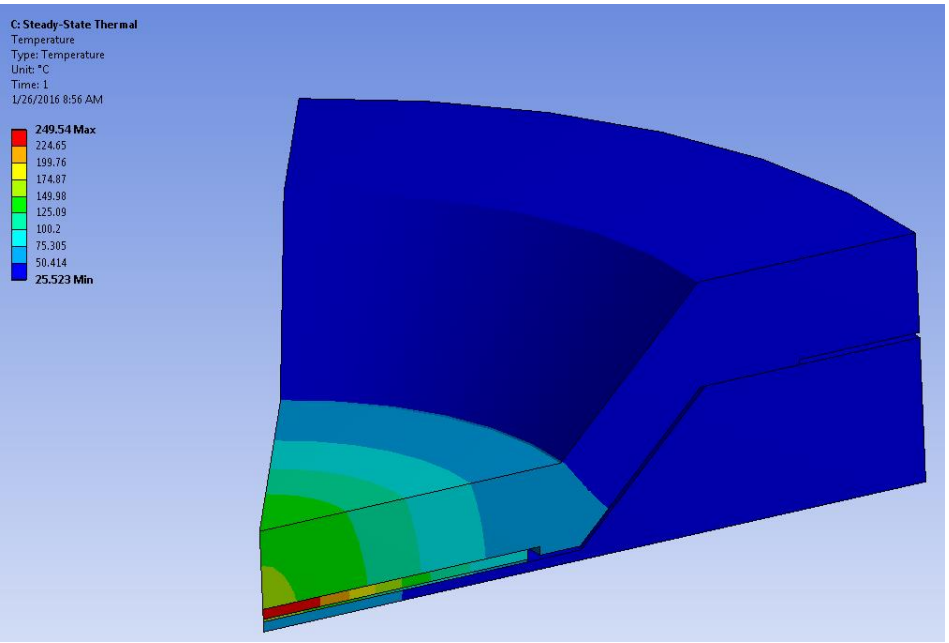

Holder Temperature Only

Temp 154°C max

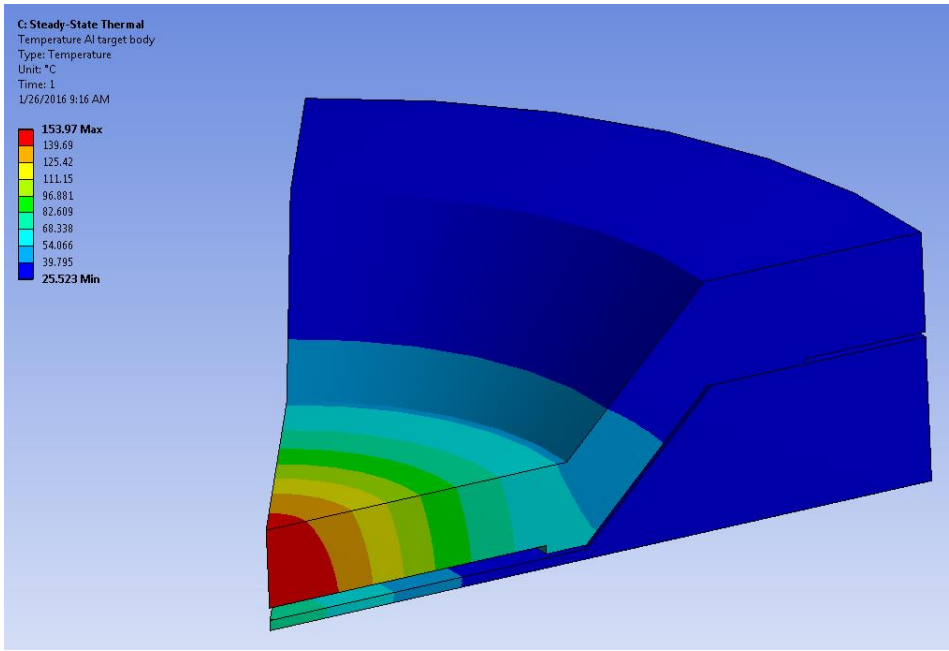

Fluid Interface Conditions

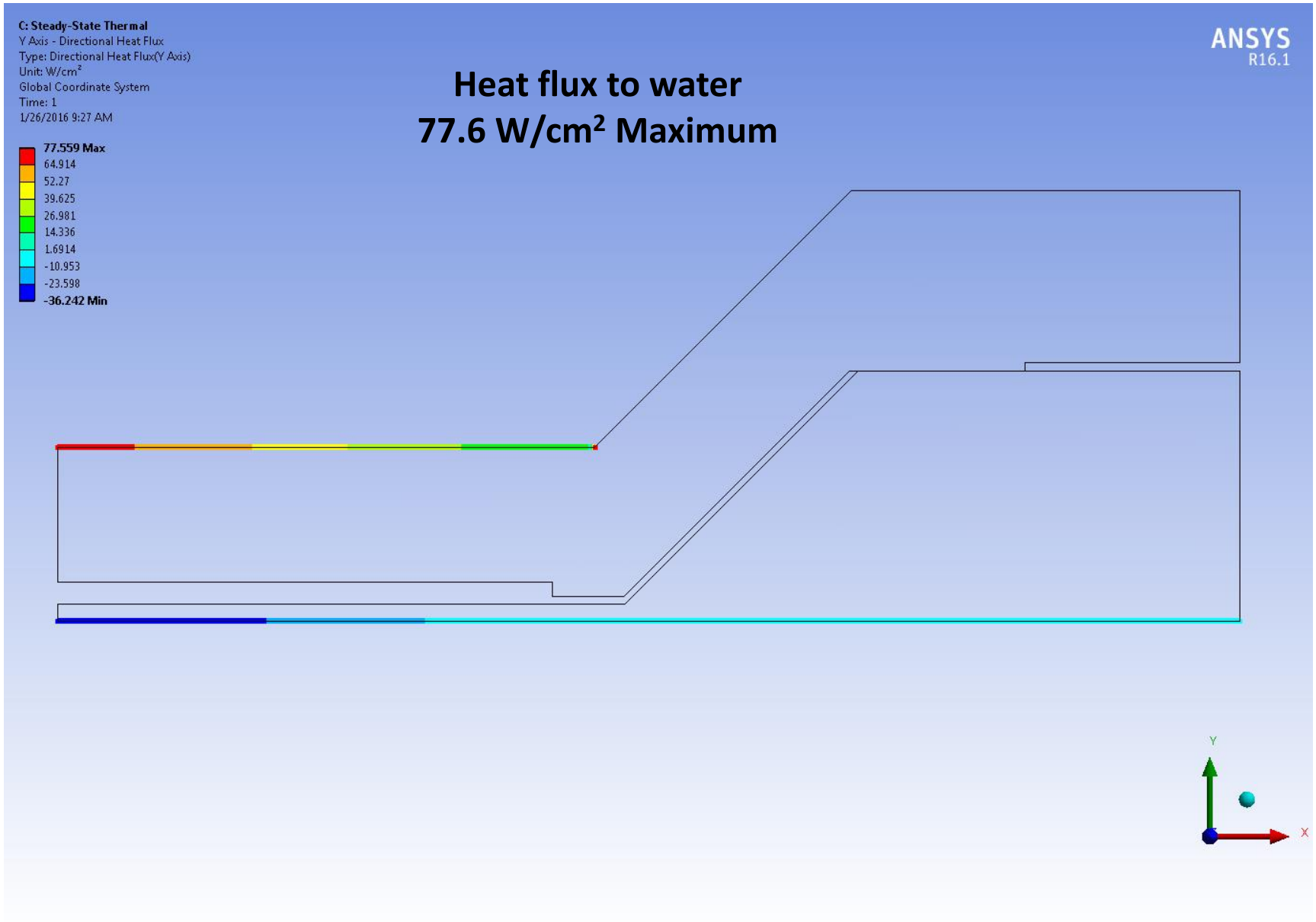

Summary and Conclusion

Maximum GaAs target Temperature = 250 °C

GaAs – Melting Point Temperature = 1238 °C

- SAFE

Maximum Aluminum Temperature = 154 °C

Aluminum – Melting Point Temperature = 660°C

- SAFE
- Maximum heat flux at water surface = 77.6W/cm2
- *Free Convection* Critical Heat Flux = 132.2 W/cm2
- SAFE

References

- D:\Jobs - Active\BLIP\Target Analyses\FY 16\GaW, DM
  - GaW 1-26-16.xlsx
  - GaW with Foil 1-26-16.wbpj
  - 100 percent, tight gaussian.csv

Backup Slide

2016	Energy: 116.38 MeV	focused beam		50-70 uA								
				thickness					50	60	70	uA
layer number	Layer	Material	density	inches	mm	Ei	Eout	delta E	Watts	Watts	Watts	
1	Be window	Berillium	1.85	0.012	0.305	116.5	116.2	0.3				
2	AlBeMet window	AlBeMet	2.1	0.012	0.305	116.2	115.86	0.34				
3	Beamline window	stainless steel	7.99	0.031	0.787	115.86	113	2.86				
4	water gap	water	1	0.106	2.692	113	111.18	1.81				
5	BOX front window	stainless steel	7.99	0.02	0.508	111.18	109.26	1.92				
6	water gap	water	1	0.2	5.08	109.26	105.72	3.54				
7	Al can window	Aluminum	2.7	0.02	0.508	105.72	104.97	0.75	37.5	45	52.5	
8	Al monitor foil	Aluminum	2.7	0.005	0.127	104.97	104.78	0.19	9.5	11.4	13.3	
9	GaAs foil	GaAs	5.32	0.02	0.508	104.78	103.54	1.24	62	74.4	86.8	
10	Al can back	Aluminum	2.7	0.167	4.242	103.54	97.04	6.5	325	390	455.0	
11	water back of can	water	1	0.298	7.568	97.04	91.21	5.83	434	520.8	607.6	Total
12	water gap	water	1	0.2	5.08	91.21	87.14	4.07				
13	Copper slab	Cu	8.96	0.22	5.586	87.14	56.47	30.67				
14	water gap	water	1	0.1	2.54	56.47	53.51	2.96				
15	Al degrader	Aluminum	2.7	0.354	8.991	53.51	25.75	27.77				
16	water gap	water	1	0.1	2.54	25.75	19.79	5.96				
17	Al degrader	Aluminum	2.7	0.863	21.92	19.79	stop	19.79				
18	water gap	water	1	0.1	2.54	stop	stop					
19	Stainless steel 0.220 (5.588)	SS	8	0.22	5.588	stop	stop					
				2.867								

RE: GaAs foil

Medvedev, Dmitri

Sent: Mon 1/25/2016 4:23 PM

To: Cullen, Christian