Gallium Target, Niobium Holder Thermal Analysis

Chris Cullen

July 20, 2015

Conditions

- Steady state average current = 80 μA, 116 MeV
- Pulse width = .000450 sec
- Pulse Frequency = 6.667 Hz
- 2944 Watts (36.8 MeV) total power deposited
- 4 targets, (5) .20” water gaps
- Gaussian Beam Distribution
  - FWHM=21.6 mm
  - FWTM=42 mm

Finite Element Model

- 2D Axi-symmetric model
- Niobium target holder
- Steady-state analysis
- Steady state water cooling on upstream exterior=6827 $W/m^2*°C$ (20% mass flow reduction)
- Gaussian Internal heat generation

Generic Target

- Axi-symmetric analysis region highlighted in blue
  - Ref. D25-M-3095

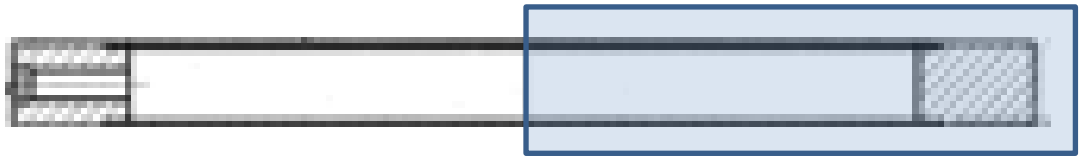

Finite Element Model Target Geometry

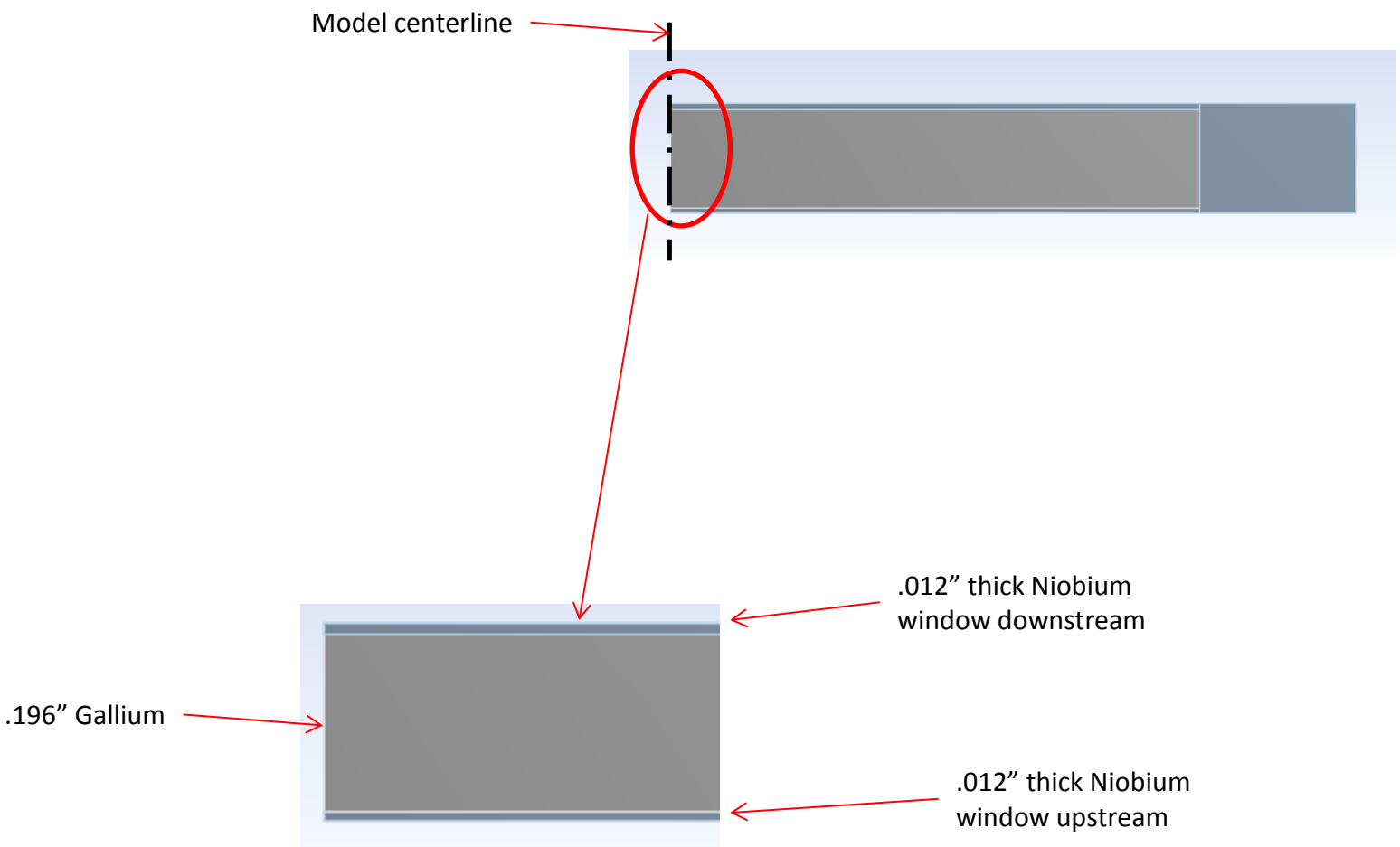

Target Temperature Profile

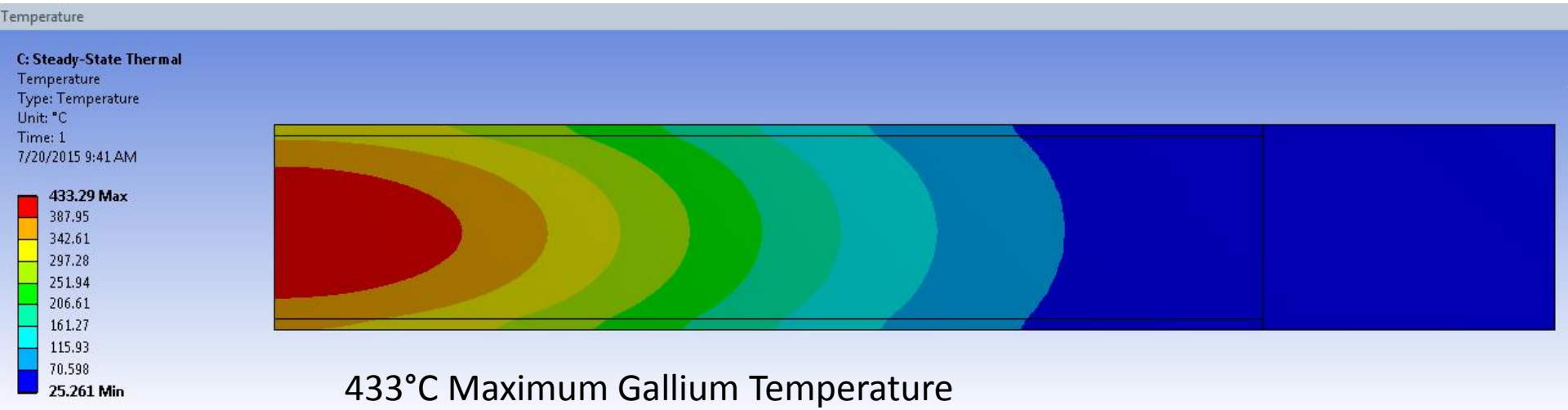

433°C Maximum Gallium Temperature

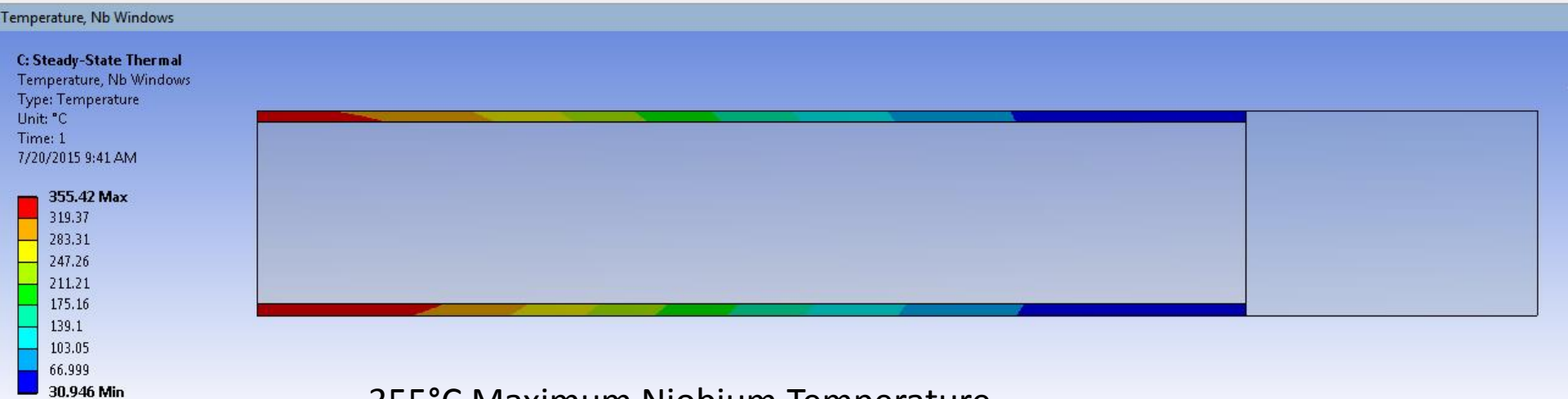

355°C Maximum Niobium Temperature

Summary & Conclusion

- Maximum Gallium temperature = 433 °C
- Ga boiling temperature = 2400 °C
- SAFE
- Maximum Niobium temperature = 355 °C
- Nb reacts with Ga at 400°C
- SAFE
- Maximum Nb heat flux at water surface = 207 W/cm^2
- Critical Heat Flux = 247 W/cm^2
- Safe

Reference Slides

- Files
  - D:\Jobs - Active\BLIP\Target Analyses\FY 15\Ga\Ga Thermal. wbpj
  - D:\Jobs - Active\BLIP\Target Analyses\FY 15\Ga\BLIP-HTC-R2 Ga Thermal.xlsx, CHFs Bernath Correlation

Target Drawing

NOTES:

1- PROVIDE SLIP FIT IN ITEM NO. 2 FOR ITEM NO. 3, MAXIMUM CLEARANCE BETWEEN ITEM 2 AND ITEM 3 TO BE ±.0005.
2- MARK PART NUMBER IN ACCORDANCE WITH MIL-STD-130.
3- SLIP FIT ITEM NO.1 WITH ITEM NO. 2, MAXIMUM CLEARANCE BETWEEN ITEM 1 AND ITEM 2 TO BE ±.0005.
4- FABRICATE AND LEAK CHECK IN ACCORDANCE WITH BNL SPEC. CAD-928.
5- TARGET TO BE FILLED WITH GALLIUM.

REVISION APPROVALS

REV	ECN NO.	DESCRIPTION	DATE	BY	CHK	DES	ENG	SUPV
A	-	INITIAL RELEASE	-	-	-	-	-	-
B	-	WAS RD-D25-M-3095	4-19-07	LR	-	-	-	-
C	CAD1376	AS PER ECN	10-5-07	LR	SB	AA	SB	JT
D	CAD1607	AS PER ECN	2-20-09	SB	AA	AA	JT	JT

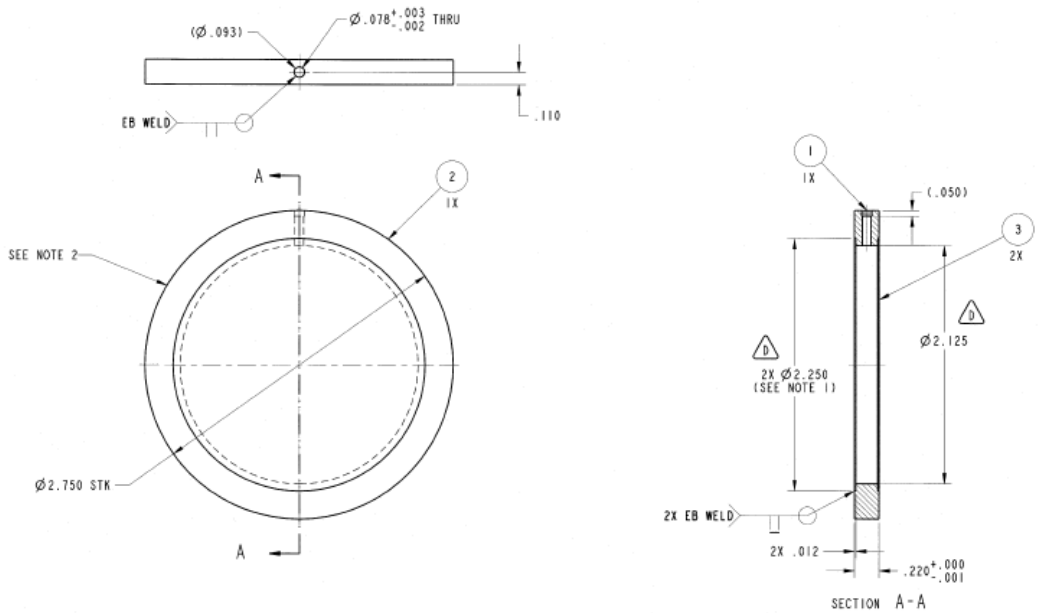

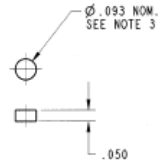

DETAIL - ITEM 1
SCALE 4/1

QTY	ITEM NUMBER	PART NUMBER	DESCRIPTION	REMARKS
2	3	-	SHEET .012 THK	NIOBIUM
1	2		PLATE	NIOBIUM
1	1	-	FILL PLUG	NIOBIUM

BILL OF MATERIALS

USED ON DRAWING NO.	QTY. PER ASS'Y.
D25-M-3391	1
D25-M-3382	1
D25-M-3330	1
D25-M-3214	1
D25-M-3089	1

APPLICATION

INTERPRET IN GENERAL ACCORDANCE WITH ANSI/ASME Y14.5M-1994

UNLESS OTHERWISE SPECIFIED
DIMENSIONS ARE IN INCHES
DECIMAL TOLERANCES
.X ± .030
.XX ± .015
.XXX ± .005
ANGULAR TOLERANCE ±1°

125 FINISH
BREAK SHARP EDGES MAX. .03 MIN. .015

DRAWN BY	C. LONGO	10/05/07
CHECKED BY DESIGN APPROVAL	S.BELLAVIA	12/06
DESIGN APPROVAL	JA	12/06
ENG. DEPT. APPROVAL	S.BELLAVIA	12/06
LABORATORY APPROVAL	J.TUOZZOLO	12/06
CCO I CHE		
SYSTEMS MGRS		
N.A.		
SAFETY / ISM DEPARTMENT CHECK		

COLLIDER-ACCELERATOR DEPARTMENT
BROOKHAVEN NATIONAL LABORATORY
UPTON, N.Y. 11973

BLIP UPGRADE - TARGET DRIVE
TARGET/DEGRADER HOLDER 2.75 APERTURE
TARGET, GALLIUM

SIZE D | DRAWING NUMBER: D25-M-3095 | REV. D
Q.A. CATEGORY A-3 | SCALE: 2/1 | WEIGHT: 0.2LBS | SHEET 1 OF 1

DWG NO D25-M-3095 SHT 1 OF 1 D

PRO-E