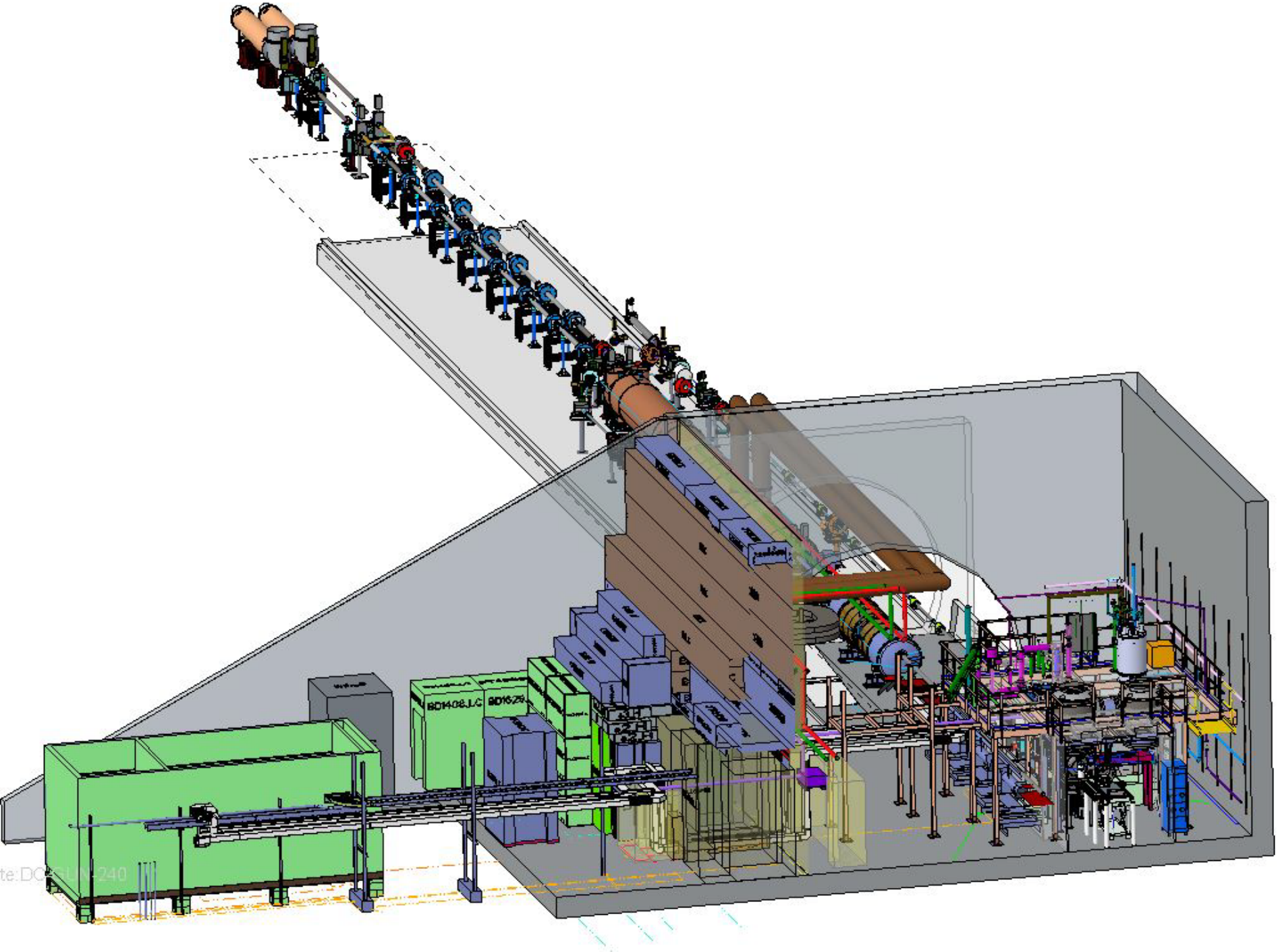
BD1408.LC
BD1629

LEReC Project Mission/Purpose

The purpose of the LEReC is to provide significant luminosity improvement for RHIC operation at low energies to search for the QCD critical point (Beam Energy Scan Phase-II physics program).

This requires:

- Building and commissioning of new state of the art electron linear accelerator (LEReC will be first linac-based cooler).
- Produce and transport high-brightness electron beam with electron beam quality suitable for cooling.
- Commissioning of bunched beam electron cooling.
- Commissioning of electron cooling in a collider.

Many new accelerator systems will need to be built, installed and commissioned, including several RF systems, magnets, beam instrumentation, etc.

LEReC System 2017

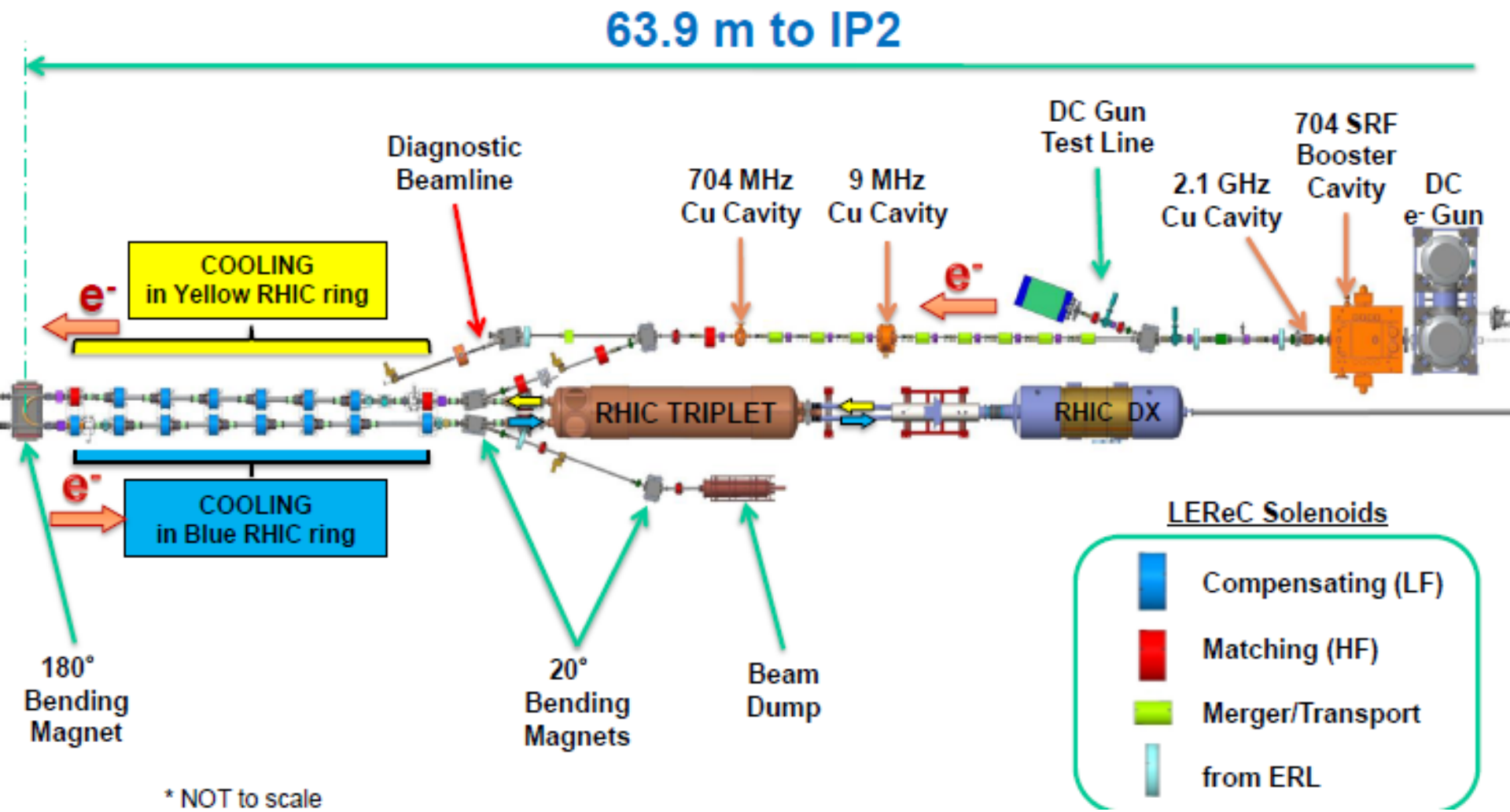

BROOKHAVEN NATIONAL LABORATORY

Critical Dates (Early Start/Finish)

2016 Shutdown

- DC Gun Arrival at BNL **9/20/16**
- DC Gun Conditioning Start 02:00 **10/18/16**
- DC Gun Conditioning Complete **12/1/16**
- Laser system installation Complete **12/1/16**
- DC Gun Test Beam Line Installation Complete **1/15/17**
- 400kV Electron beam commissioning **1/16/17 to 7/1/17**

2017 Shutdown

- SCRF Booster Cavity and Cryogenics Installation
- Transport, Diagnostic, and Beam Dump Line Installation
- 3/1/2018

LEReC accelerator (100 meters of beamlines with the Gun, 5 RF systems, many magnets and instrumentation devices)

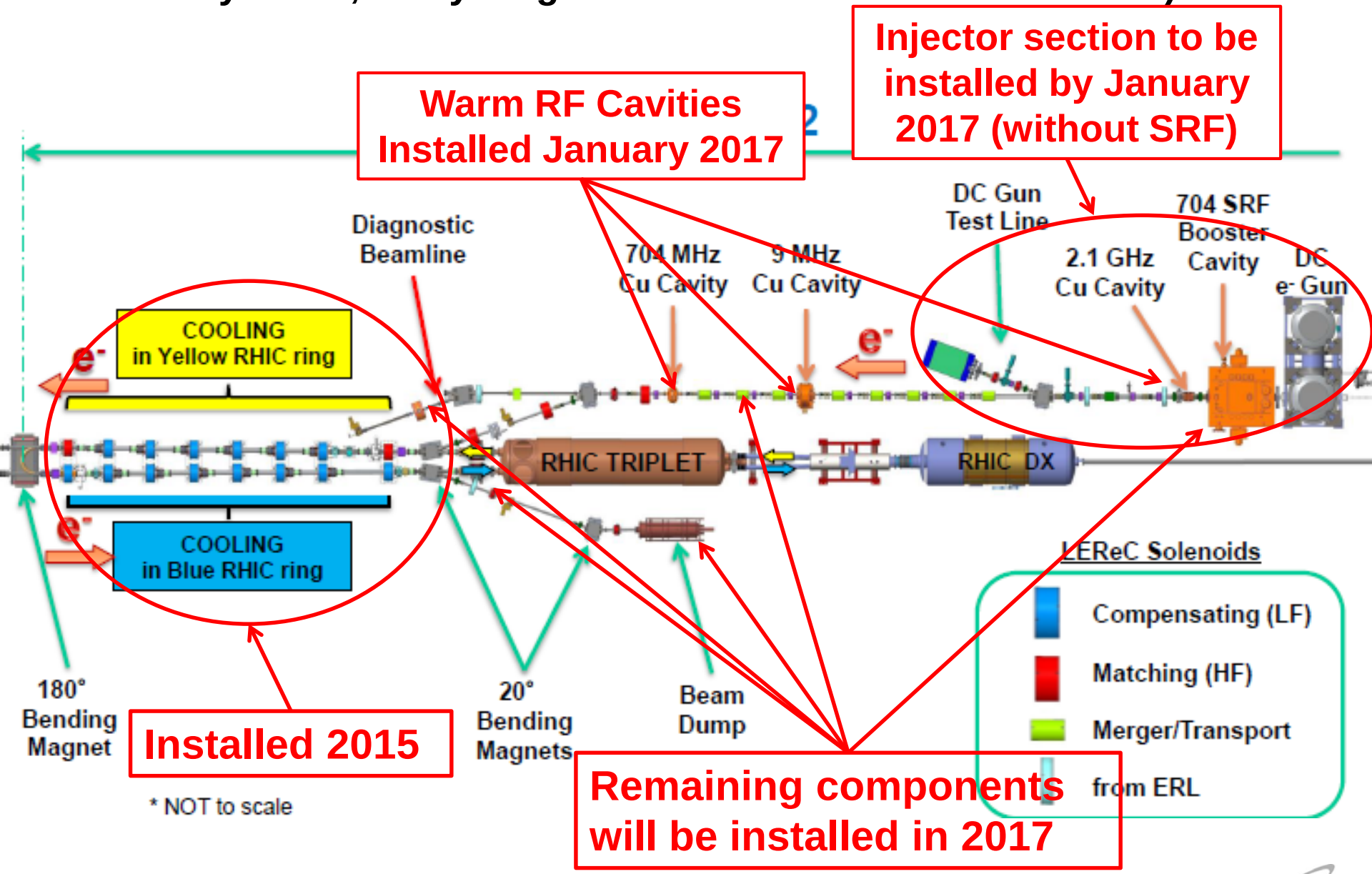

BROOKHAVEN NATIONAL LABORATORY

LEReC Injection section 2016 (6/9/16)

2.1 GHz Cavity:
The cavity will be installed next to the beamline to decouple its commissioning from the DC gun commissioning.

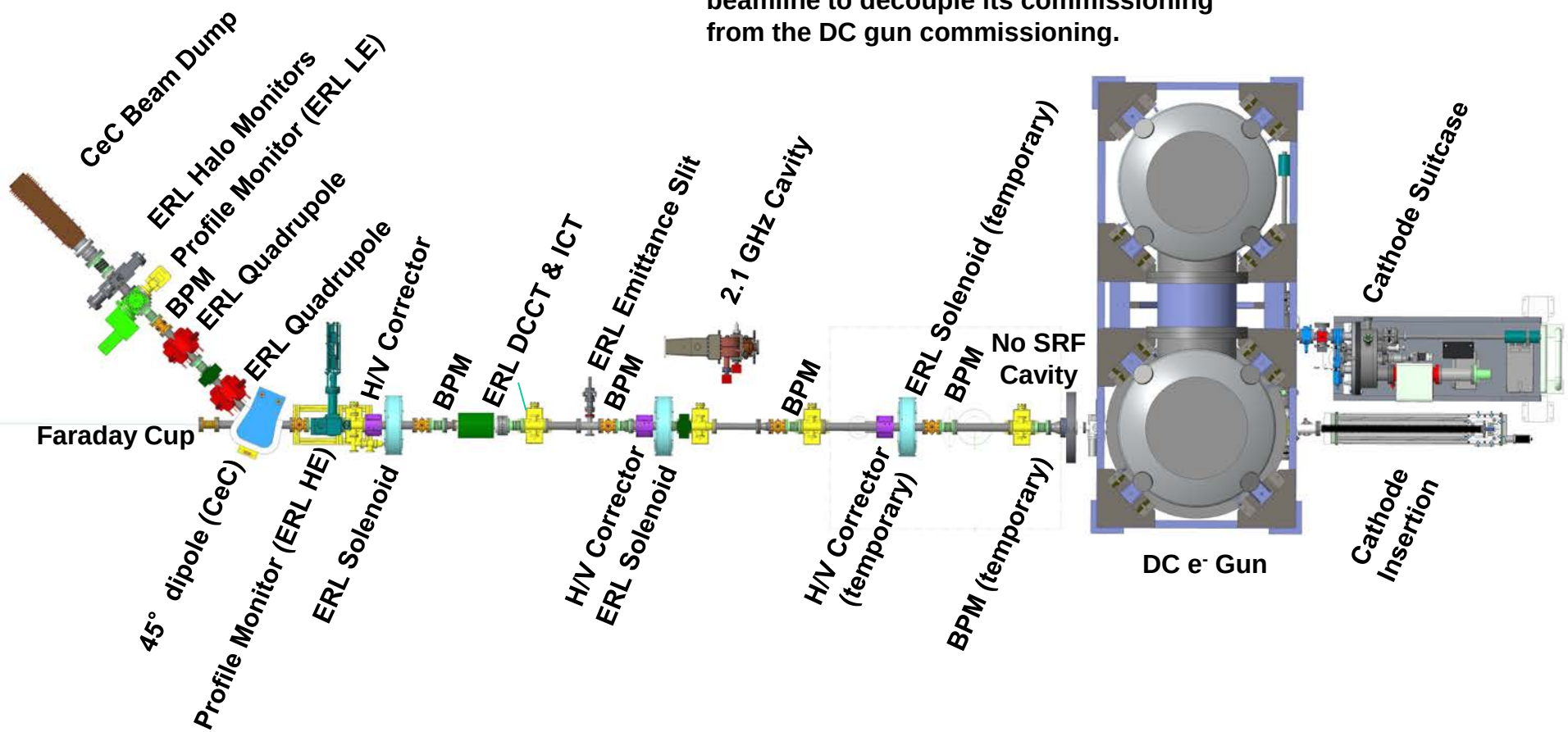

BROOKHAVEN NATIONAL LABORATORY

LEReC DC Gun Test Section 2016 (8 10 2016)

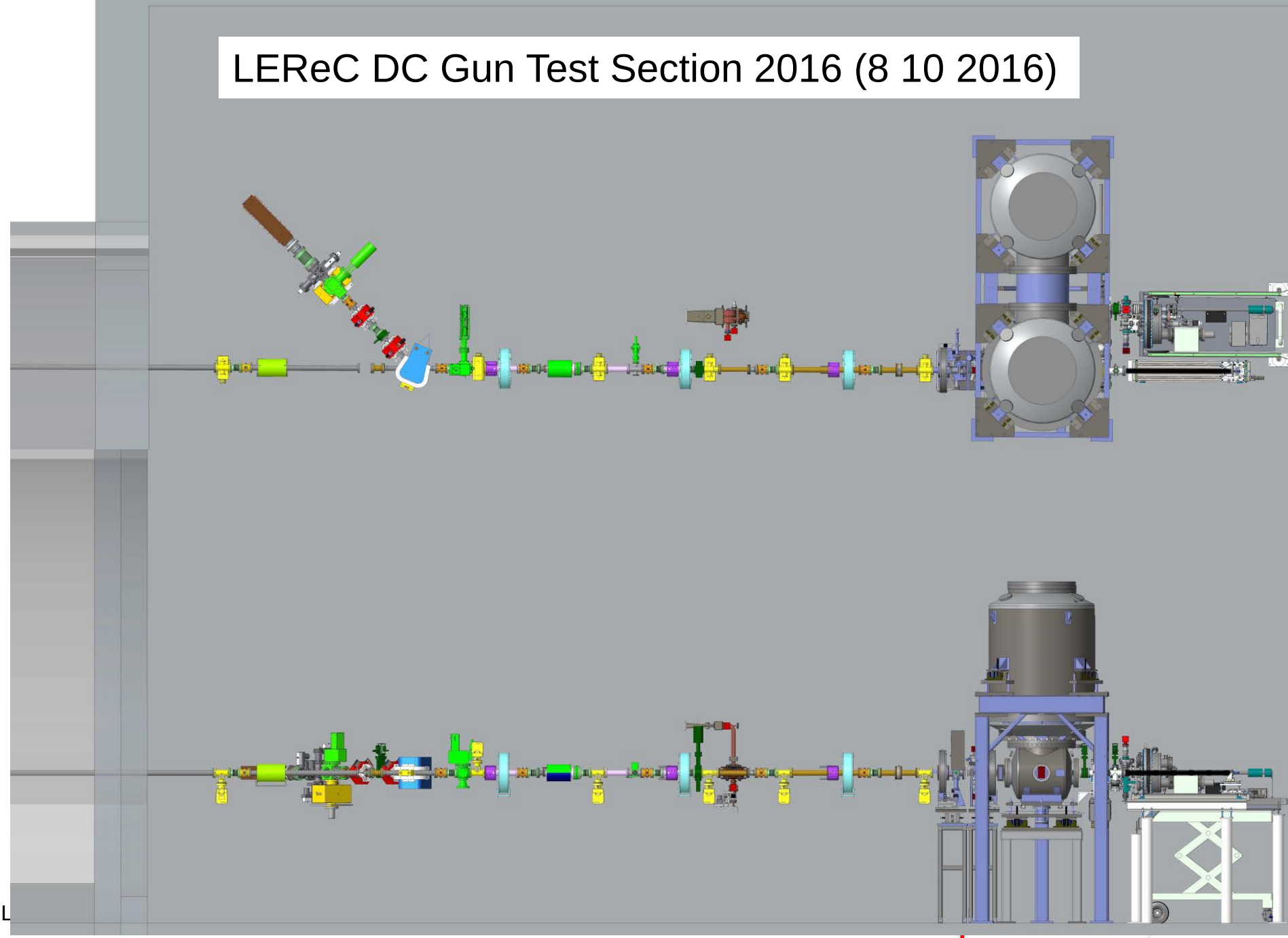

Safety Concerns 2016

Atypical Accelerator Stuff:

- High voltage DC Gun: x-ray source, SF6 pressure vessel
- Cathode system: motorized drive, motorized transport cart.

Newly Typical Accelerator Stuff:

- High power laser system
- High concentration of components, work platform
- 10 kW electron dump (400kV beam no residual radiation)

Typical Accelerator Stuff:

- Beam transport: many motorized drives for diagnostics & RF cavity tuning, magnets, HV pumps & gauges, HV radiation monitors, High Power RF cavities – x-ray sources.
- Lead shielding
- Shift work for beam commissioning.

Safety Concerns 2017

Atypical Accelerator Stuff:

- High voltage conditioning DC Gun: x-rays, SF6 pressure vessel
- Cathode system: motorized drive, manual valves

Newly Typical Accelerator Stuff:

- **SCRF cavity, local cryogenic system, cleanroom assembly**
- High power laser systems
- High concentration of components, work platform
- 10 kW electron dump (**2.6 MeV** beam no residual radiation)

Typical Accelerator Stuff:

- Beam transport: many motorized drives for diagnostics & RF cavity tuning, magnets, HV pumps & gauges, HV radiation monitors, High Power RF cavities – x-ray sources.
- Shift work for beam commissioning.

(First) ASSRC Review

- Focus on 2016 installation: 400kV DC Gun with laser for photocathode and diagnostic beam line + RF Cavity commissioning
- Some 2017 installation issues will be set in stone in 2016.
- Systems review and discussion:
  a) DC Gun & Power Supply (J. Sandberg, D. Bruno, C.F. Mi)
  b) Cathodes (C.J. Liaw)
  c) RF (A. Zaltsman, K. Smith, C. Brutus, C. Pai)
  d) Access Controls (J. Reich, D. Hillies CeC)
  e) Civil Construction Area Issues (D. Phillips, C. Folz)
  f) Instrumentation (D. Gassner, T. Miller CeC)
  g) Magnets, Vacuum, & Power Supplies
     (G. Mahler, M. Mapes, D. Bruno CeC)
  h) Cryogenics (R. Than)

BROOKHAVEN NATIONAL LABORATORY

Other Safety Documentation & Reviews

- BNL Pressure and Cryogenic Safety Subcommittee: DC Gun SF6 System – reviewed July 2016
- C-AD Radiation Safety Committee: 2016 – External Dose Rates for LEReC Gun Test, Guidance for LEReC Beam Dump Shields, LEReC and the ASO, Laser Penetration for IR2, 2015 - LEReC Utility Ports Near IR2
- BNL Laser Safety Committee: Photo-cathode laser - to be reviewed (2016 installation), DC Gun instrumentation laser
- BNL Pressure and Cryogenic Safety Subcommittee: SCRF Booster Cavity cryogenic systems – to be reviewed (2017 installation)
- IRR and ARR: documentation, OPM, operations integration,

DC Gun Assembly

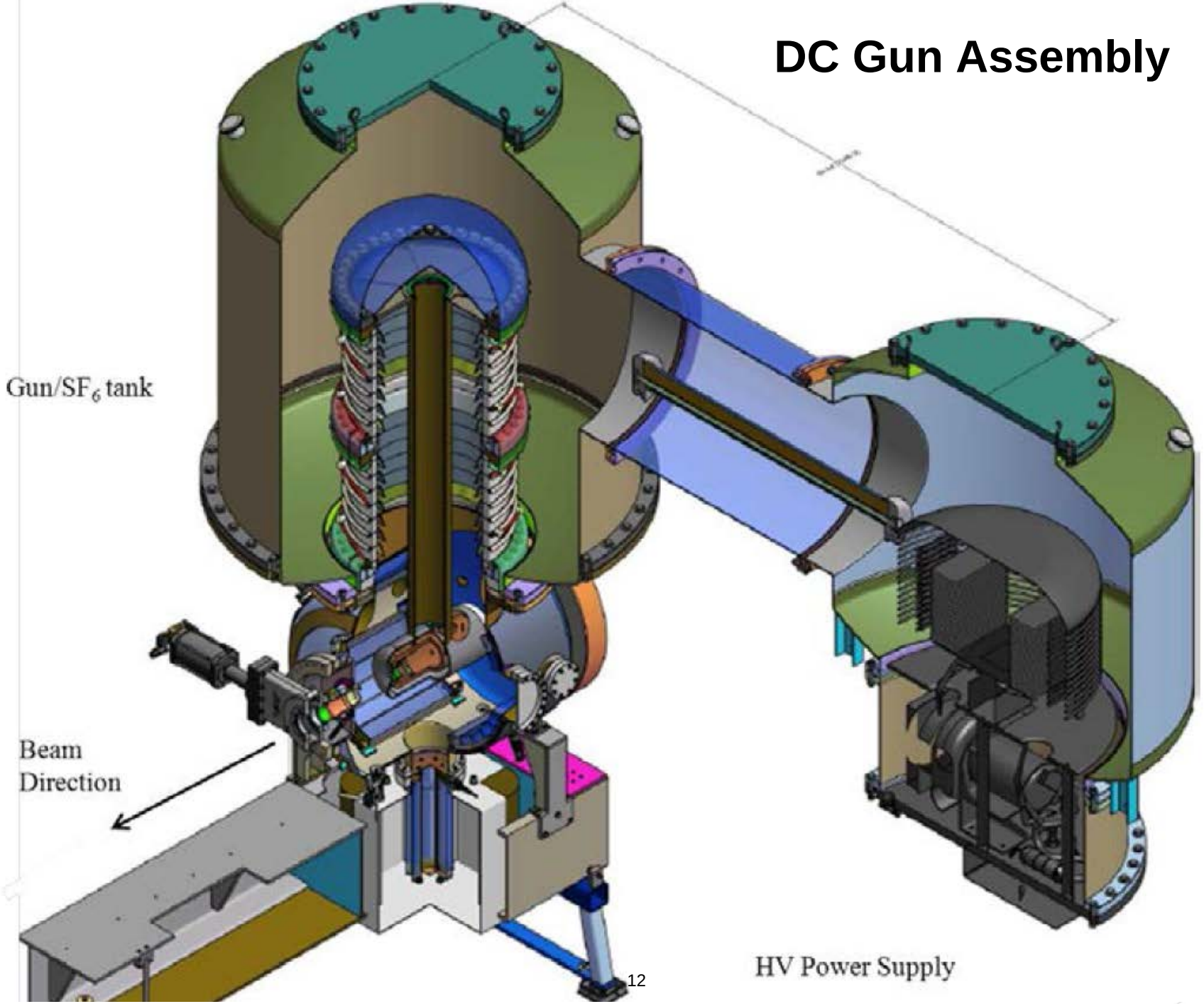

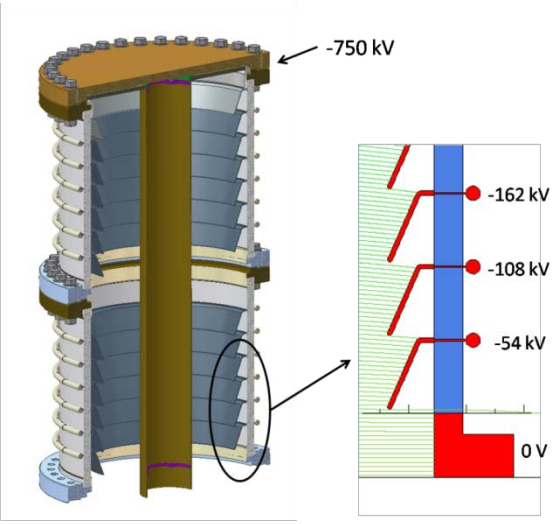
-750 kV
-162 kV
-108 kV
-54 kV
0 V

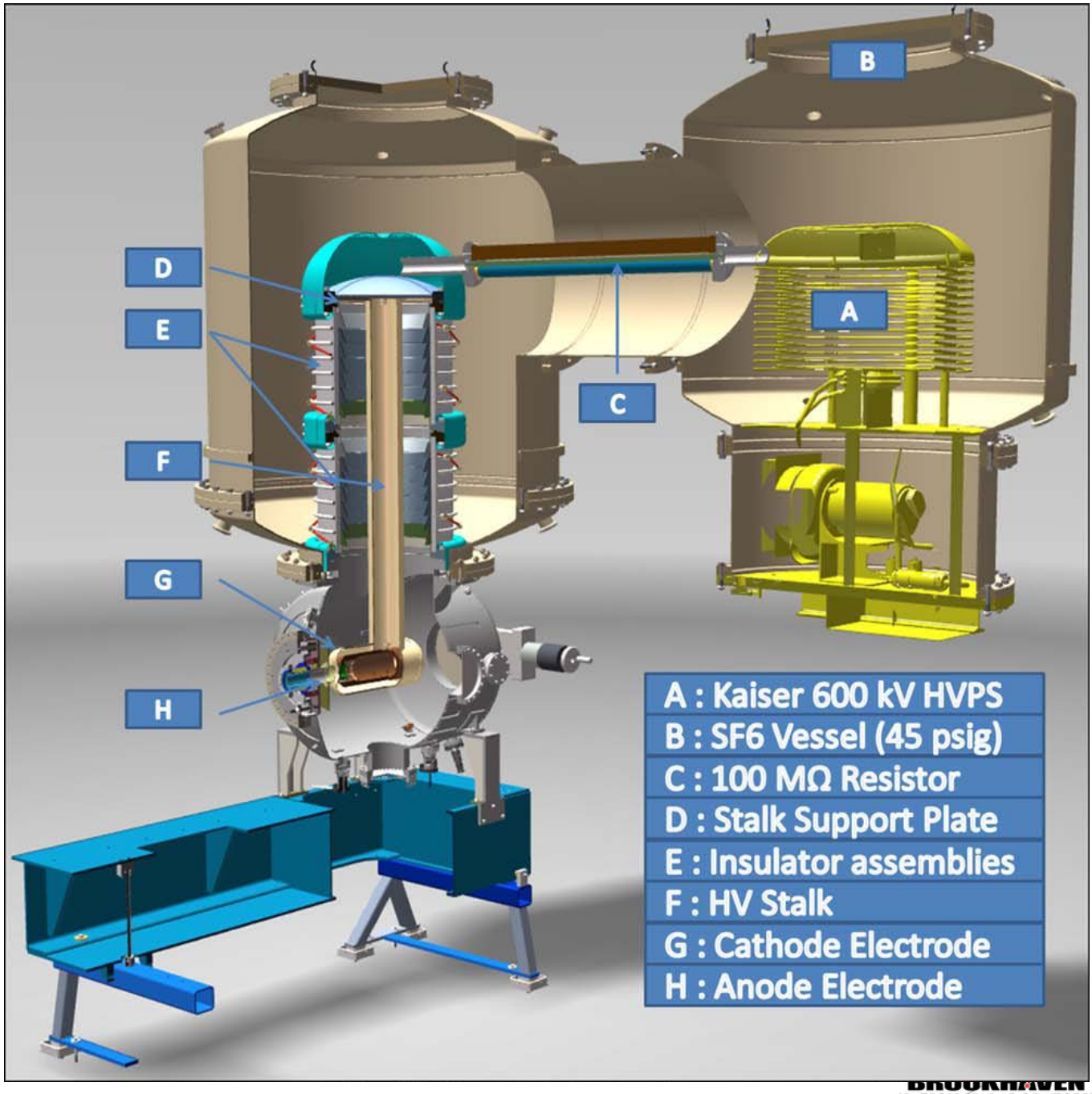
B
D
E
A
C
F
G
H
A : Kaiser 600 kV HVPS
B : SF6 Vessel (45 psig)
C : 100 MΩ Resistor
D : Stalk Support Plate
E : Insulator assemblies
F : HV Stalk
G : Cathode Electrode
H : Anode Electrode

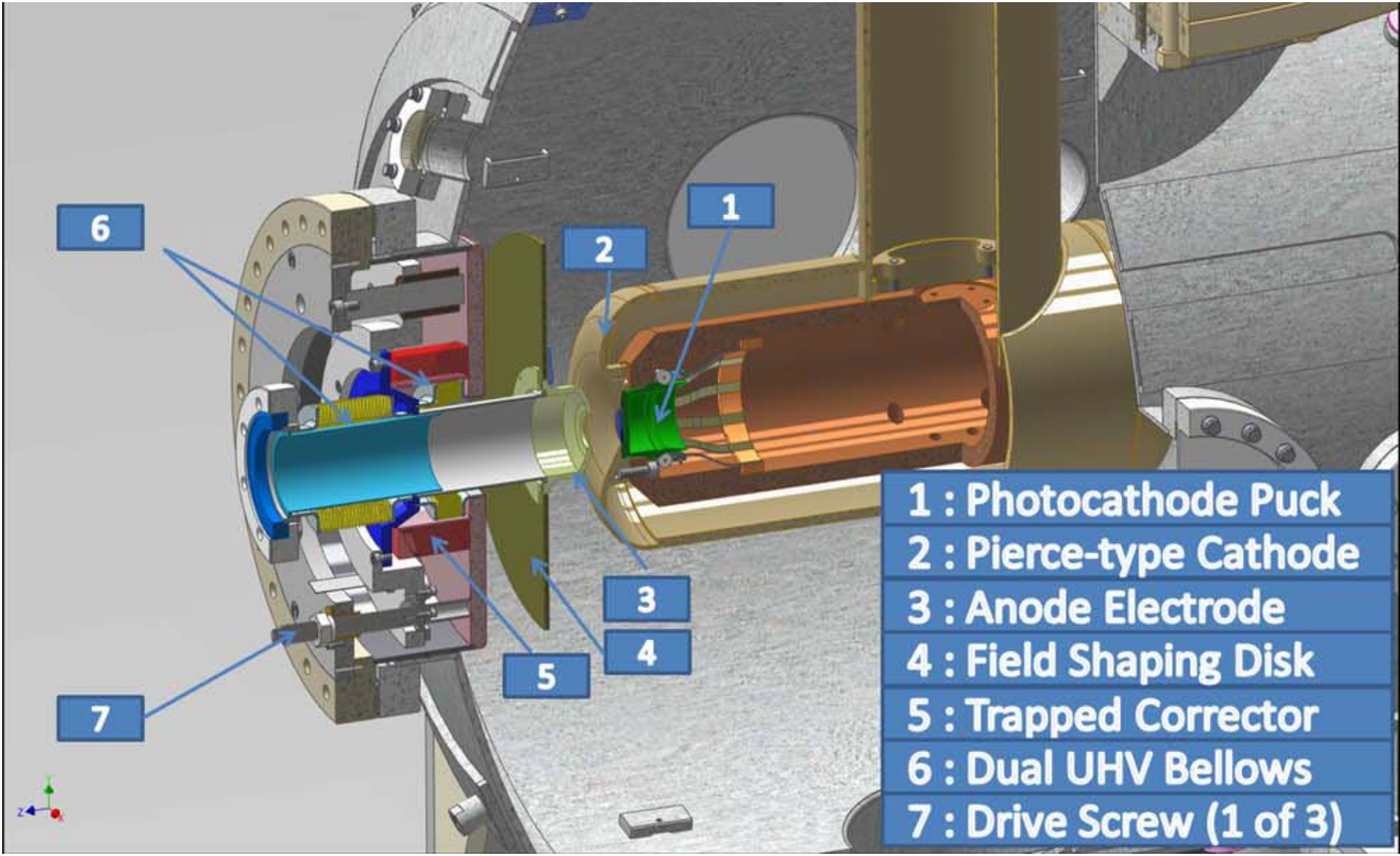
6
1
2
3
4
5
7
1 : Photocathode Puck
2 : Pierce-type Cathode
3 : Anode Electrode
4 : Field Shaping Disk
5 : Trapped Corrector
6 : Dual UHV Bellows
7 : Drive Screw (1 of 3)

DC Gun Based on Cornell Design

- **ASME Code Pressure Vessels**
- **Larger support frame**
- **Better heat conduction cathode to SF6**

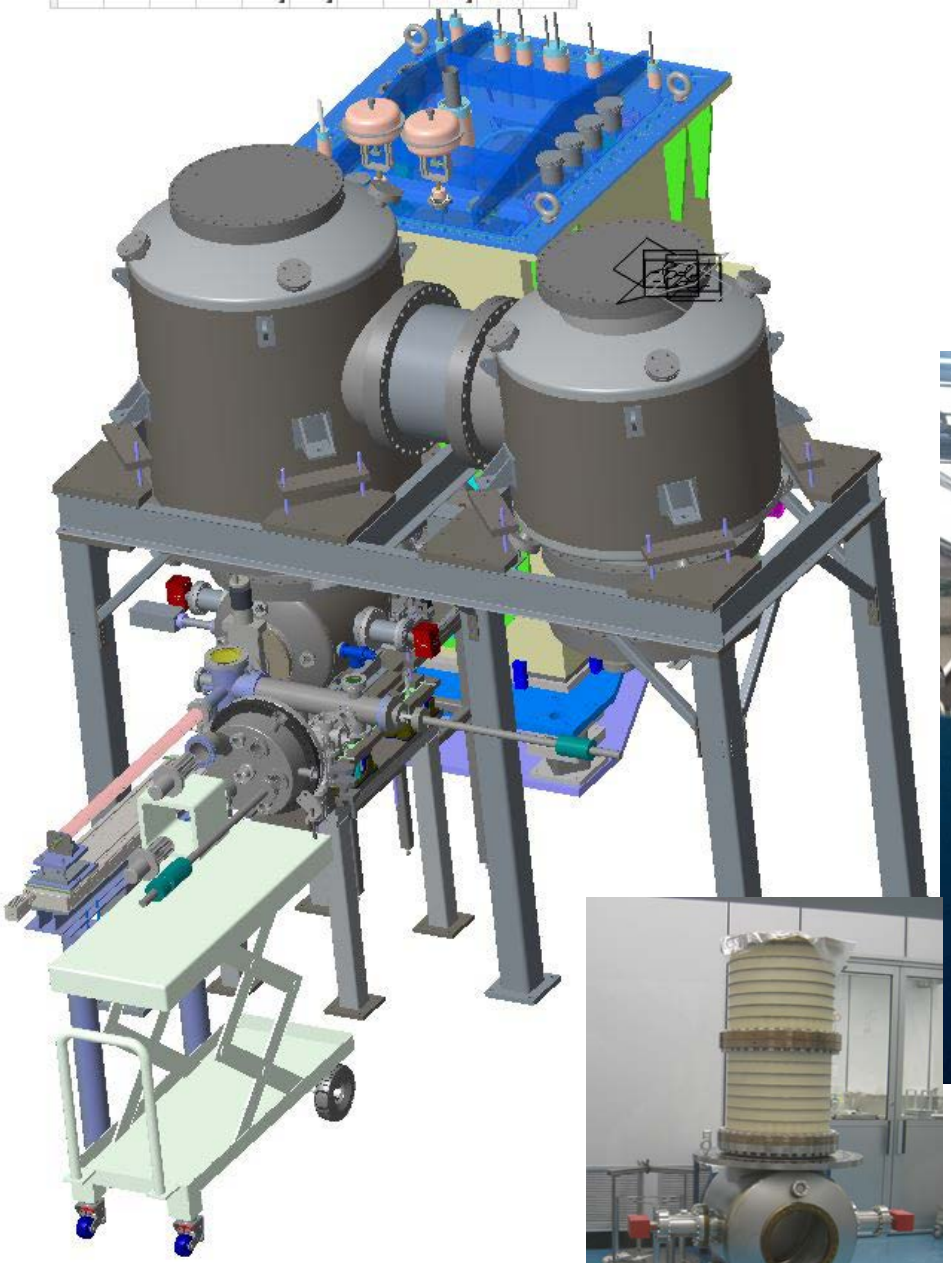

DC Gun Power Supply-Inverter

- Inverter Rack in Tunnel – 10 foot cable length restriction-Litz Wire
- Input -480V - 3 Phase power-96 kW
- Power to Racks via two series contactors mounted on the wall interfaced with PASS system
- No Exposed Voltage's
- Requires EEI Inspection
- Water cooled: in rack and in SF6
- Interlocks for water flow, water mat, SF6 pressure, temperature
- Weight of Racks 300 pounds
- No Exemptions from the NEC required

DC Gun Power Supply-Voltage Multiplier

- -600 kV at 100 mA
- Stored Energy-75 pF---9.4 joules @ 500 kV –13.5 joules @ 600 kV
- During conditioning radiation trip set at 2 mR/hr
- Radiation trips during aggressive conditioning 300 mR/hr
- Current kept below 100 ua during conditioning and typically 30 ua
- During condition gas pressure spoiled to 10^{-5} with helium or krypton
- Typically takes 100 to 200 hours to condition a gun
- Water Leak Detector inside tank
- All external parts are grounded
- Insulating Gas SF6 @ 5 atmospheres
- 10^{-11} Torr required vacuum -180 C bake out
- Laser based fiber optic internal instrumentation

PCSS Action Items

3.1. The burst disk on the vacuum vessel and associated beamline must be ASME certified. closed

3.2. The cathode puck insertion system must have an ASME certified burst disk installed. closed

3.3. J. Sandberg must verify that the energy release in an arc is less than 10 Joules in the SF6 gas.

3.4. Seismic calculations must be performed on the support stand and assembly and the platform designs sent to M. Gaffney for review. closed

3.5. Verification must be provided that the SF6 tank on the cart is ASME certified. closed

3.6. A goal should be set to maintain less than 300 pounds total of SF6 at any one time. This should be coordinated with J. Williams. closed

3.7. Storage of the gas service cart should be considered for radiation issues since it is stored within an accelerator.

3.8. A determination must be made as to the value of installing a SF6 monitor in the trench.

3.9. The load test for the lifting fixture must be submitted to the Lifting Safety Committee for review.

3.10. A method to handle a release of SF6 from the relief valve must be optimized for personnel protection.

3.11. The water loop process piping design must be documented and compatible with the system pressure. closed

3.12. M. Cubillo must review the pressure test on the ceramics that was performed by Cornell.

3.13. The calculation documents submitted must be signed by AET. closed

3.14. Runcards for this area must be updated to reflect the use of SF6.

SF6 Gas Handing

Properties of SF6 Gas

- Colorless, odorless, tasteless and posses a low order of toxicity.
- Chemical inert and non-flammable.
- When subjecting to an electric arc heat, the gas can be decomposed into potentially toxic byproducts, such as: fluorides sulphur and metal fluorides.
- When released one of the worst green house gasses.
- SF6 decomposition products form corrosive & conductive compounds w/moisture.
- In presence of moisture air, noxious decomposition products w/odor of rotten eggs.
- By weight SF6 gas is approximately five times heavier than air.

Gas Handing Precautions

- ODH calculations completed and reviewed (P. Cirnigliaro and PCSSC)
- SF6 volume reviewed with J. Williams and will be added to BNL inventory list
- SF6 handling OPM being developed w/C. Carlson and L. Hammons
- SF6 handling will be done with experienced staff (C. Carlson and Tandem Team)

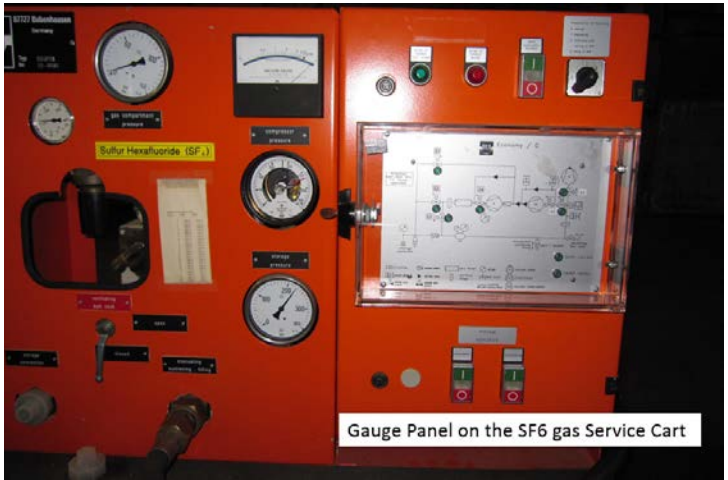

Gauge Panel on the SF6 gas Service Cart

SF6 Gas Service Cart
Presently used at 04:00

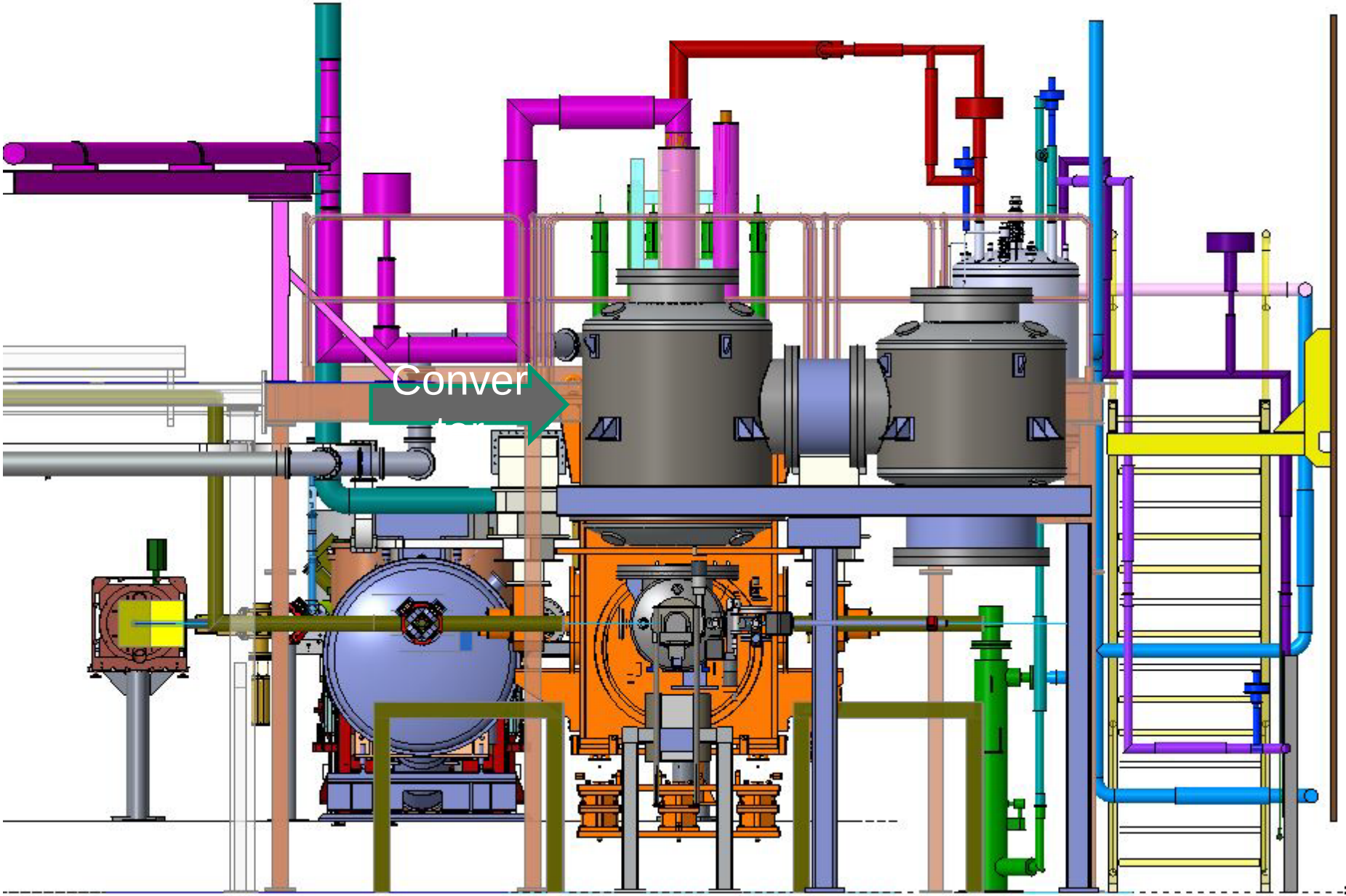
Conver

Laser Energy & Power for LEReC

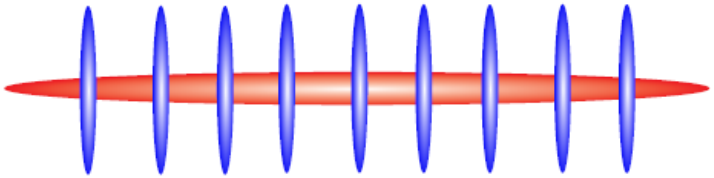

• **Electron bunch charge:**	100 pC	300 pC
• **Laser energy (QE=1%):**	24 nJ	72 nJ
• **Repetition rate (MHz):**	9.1 x30 = 273	9.1x18 = 164
• **Green power on cathode:**	6.6 W	12 W
• **Green power from laser:**	6.6x3 =20 W	12x3=36 W

A higher laser power capability, a factor of 2-3, would be needed to achieve stable and reliable operation for beam experiment!

BROOKHAVEN NATIONAL LABORATORY

Fiber Laser System

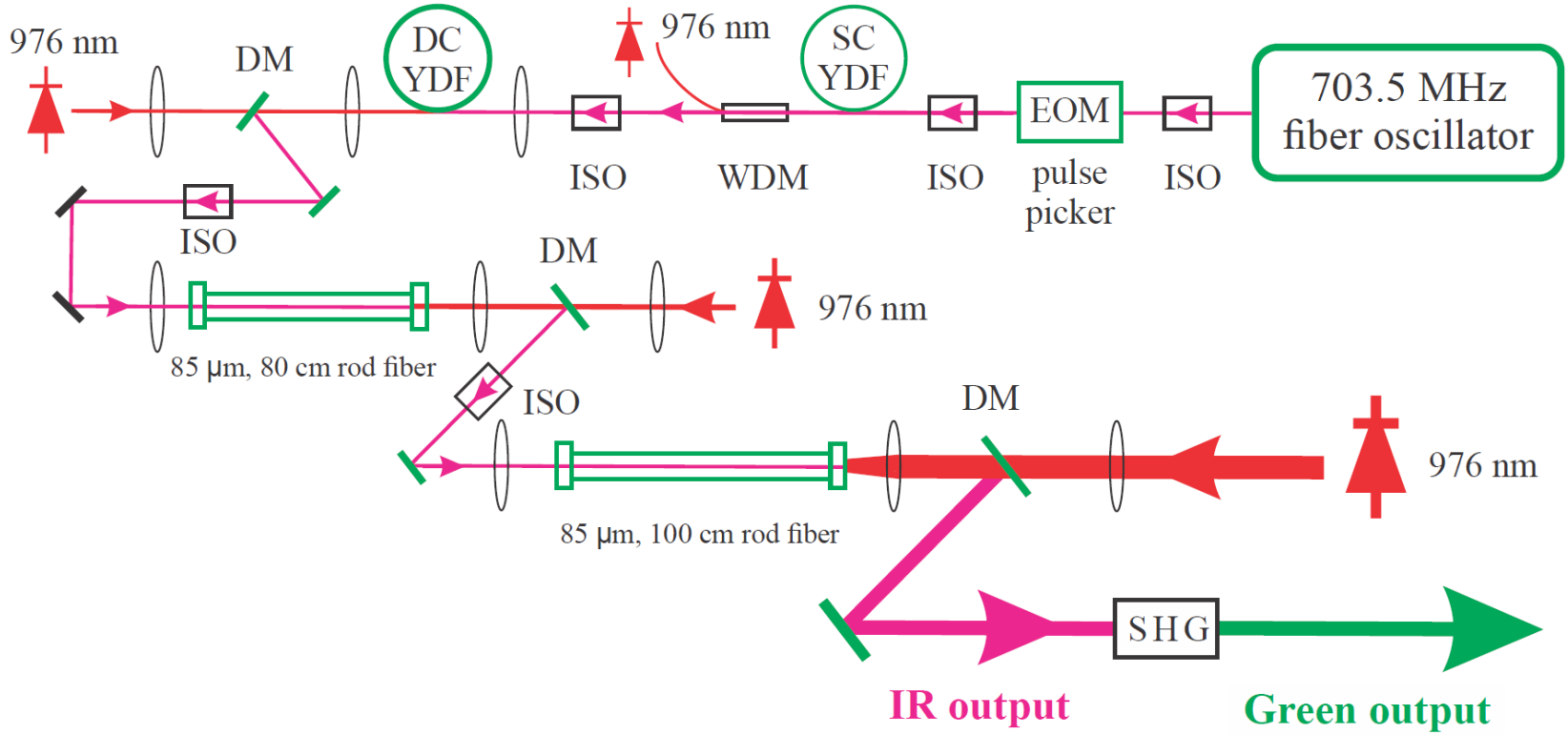

- Physical & technical limitations
- System engineering issues

BROOKHAVEN NATIONAL LABORATORY

Physical & Technical Limitations

Laser maxima

- Green power from laser: 12x3 = 36 W
- Green pulse energy: 72x3 = 216 nJ
- IR pulse energy: 324 nJ
- IR peak power: 216 kW

Physical limits

- Peak power damage: 4 MW
- Raman scattering threshold: 1.8 MW
- Nonlinear peak power: 330 kW
- Mode instability: 300 W average power

More options for higher energy or peak power:

Larger MDF fiber & modest chirped CPA

BROOKHAVEN NATIONAL LABORATORY

Fiber Laser System

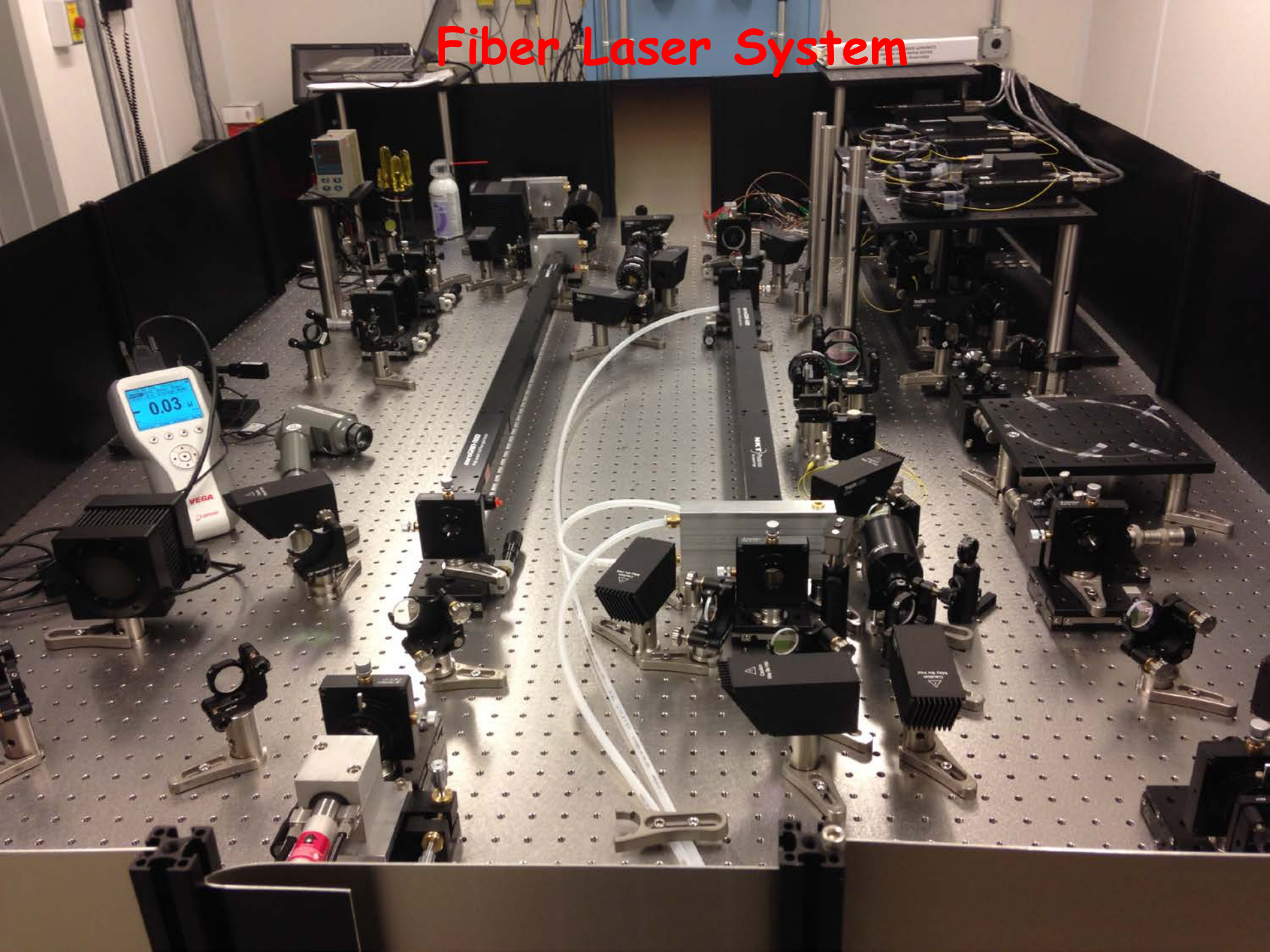

Major Equipment

600 W diode

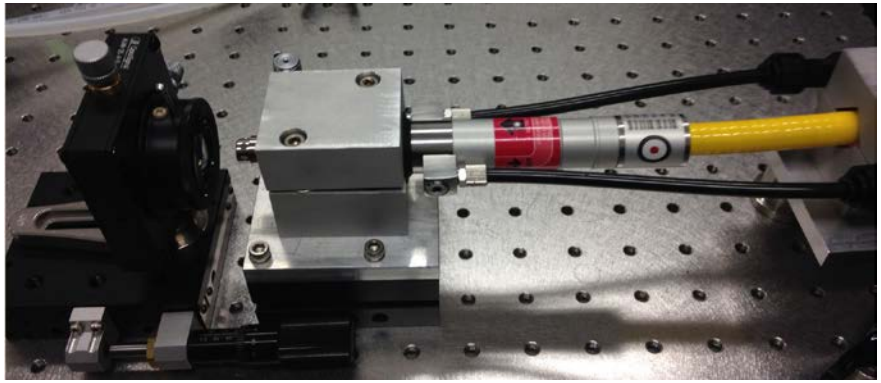

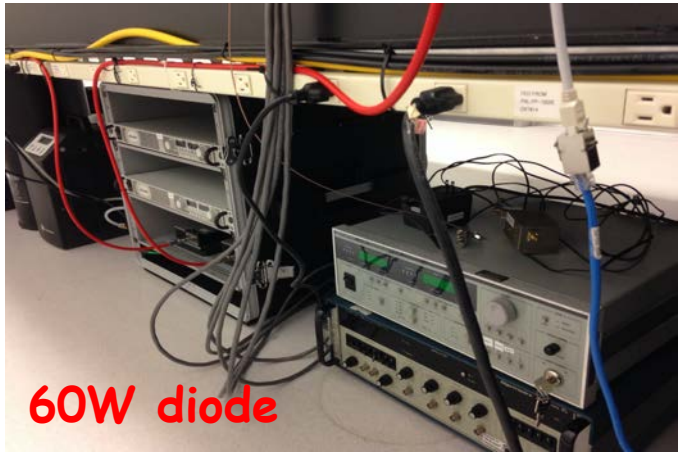
60W diode

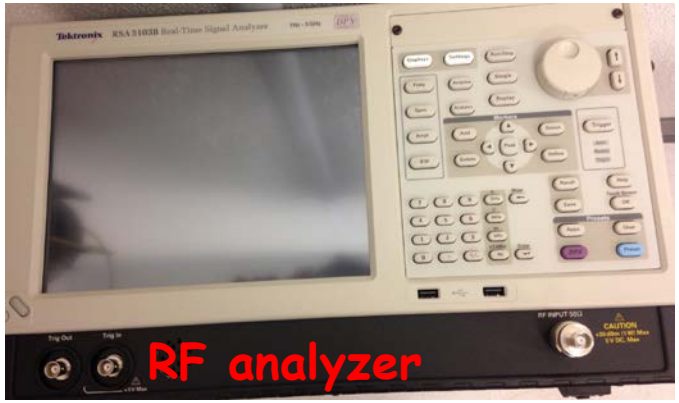

RF analyzer

chiller

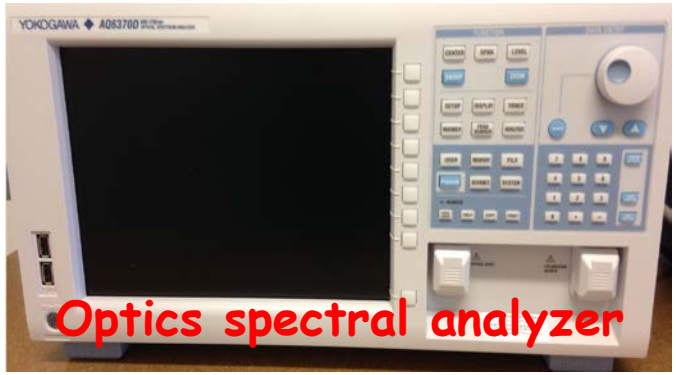

Optics spectral analyzer

Laser System Layout

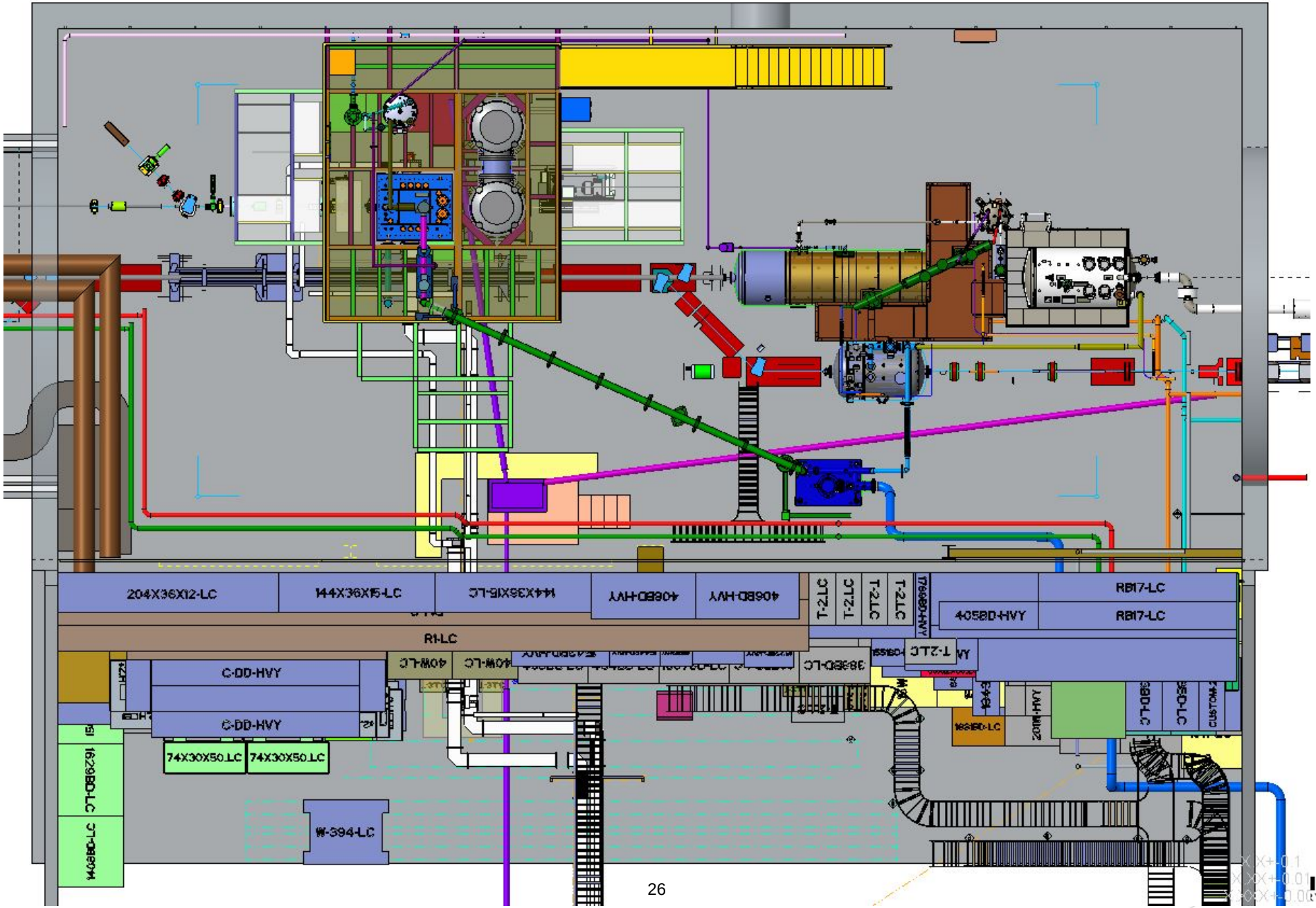

Laser System Layout

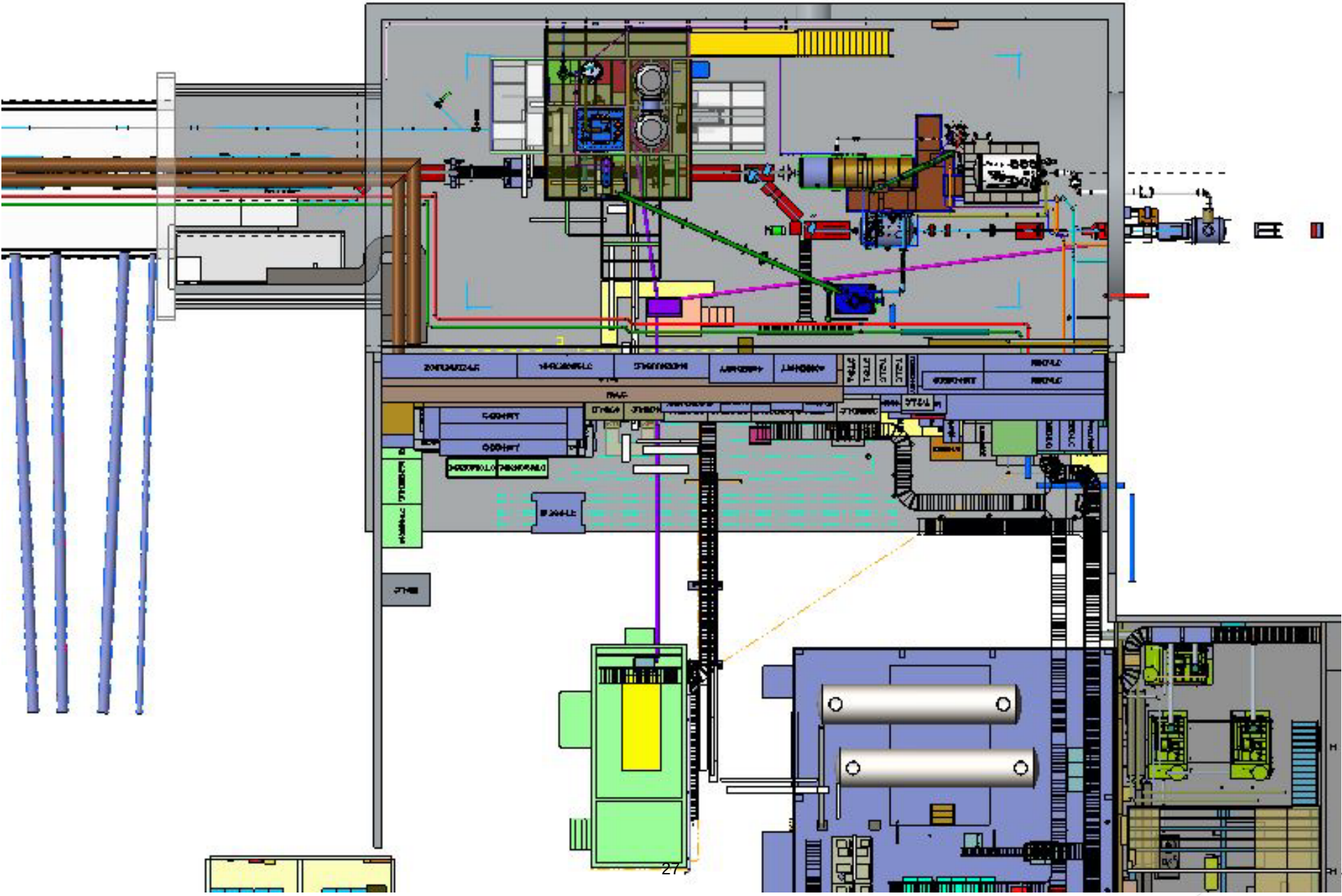

Cathode Systems

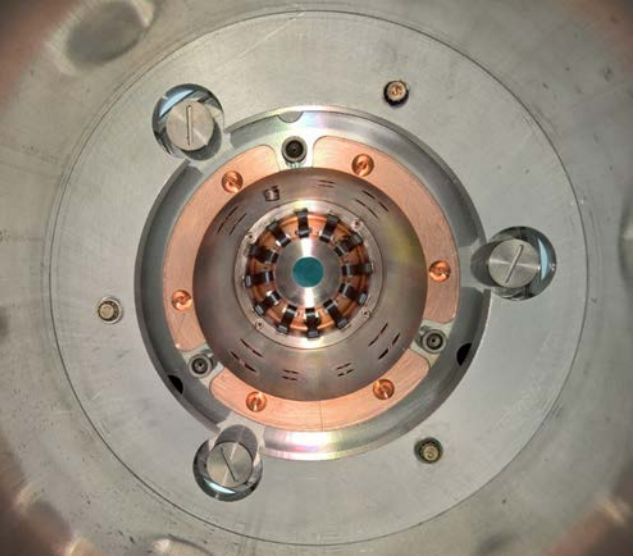

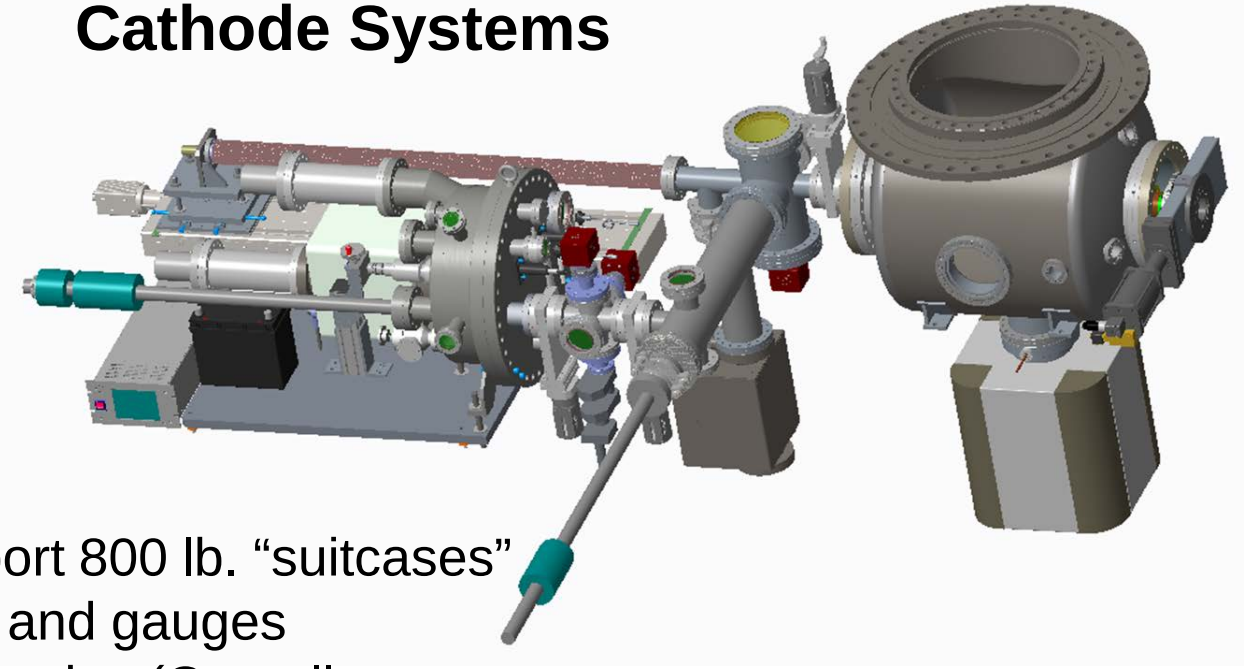

- 3 identical cathode transport 800 lb. “suitcases”
- UHVacuum with pumping and gauges
- Each suitcase has 12 cathodes (Cornell system has 4 cathodes).
- (Start with 1 – 12 cathode and 2 – single cathode)
- Suitcases to be transported from building 535 to 1002 every 2 weeks or less (we hope)
- Electric motor cart transport parking lot to tunnel

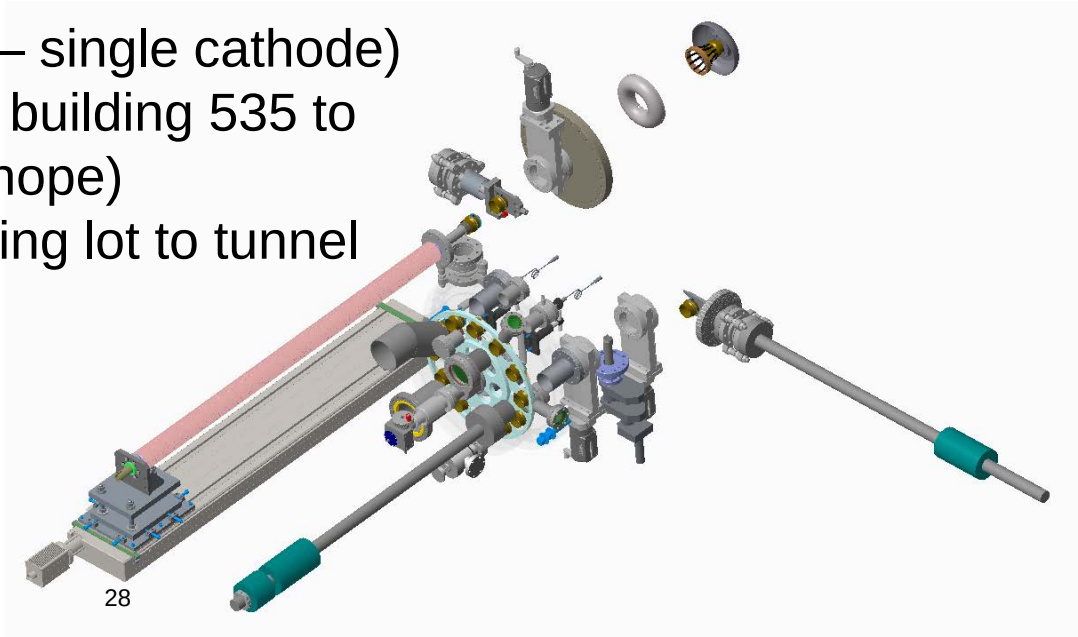

Cathode Systems Suitcase Transport

- Cathode “Suitcase” platform with 10^{-11} Torr Vacuum System.
- Fork lift at instrumentation to/from cathode production system.
- Handcart transport in building to loading dock.
- Transfer to shipping frame in pick-up truck (TBD).
- Transfer to electric cart at 1002.
- Lower & move to cathode insertion with ecart.
- Raise & transfer to cathode insertion.

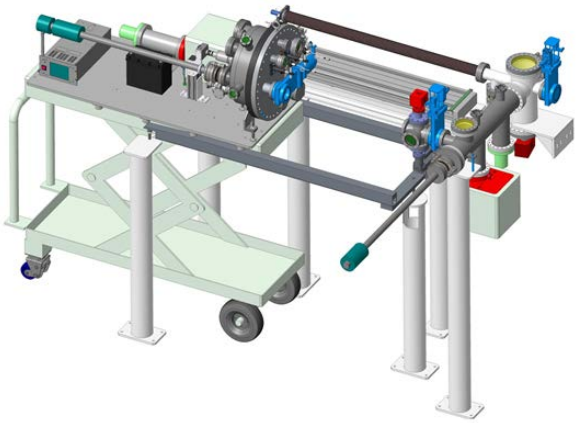

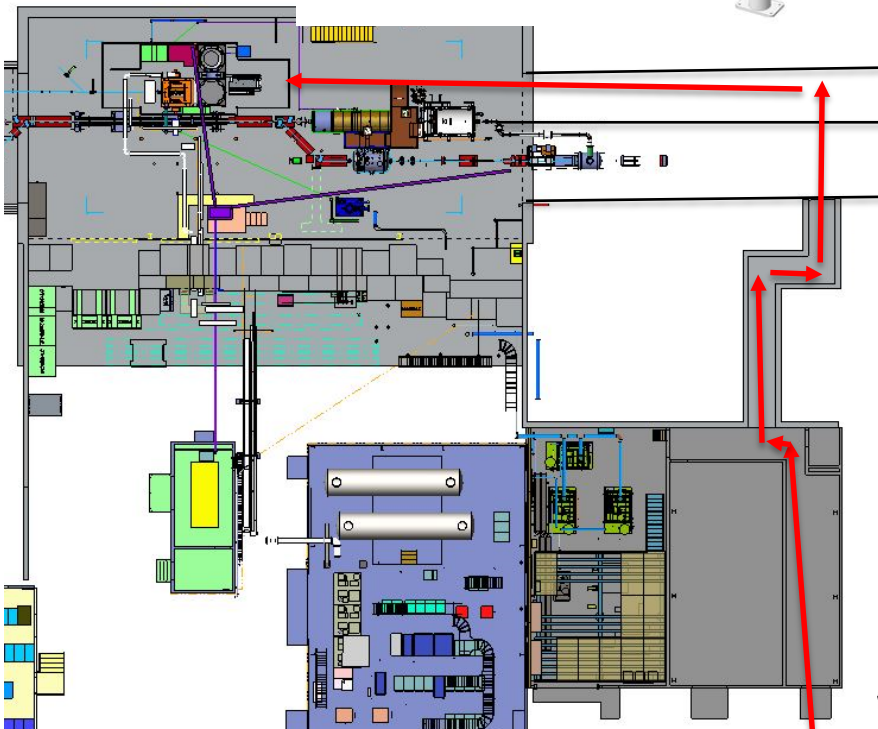

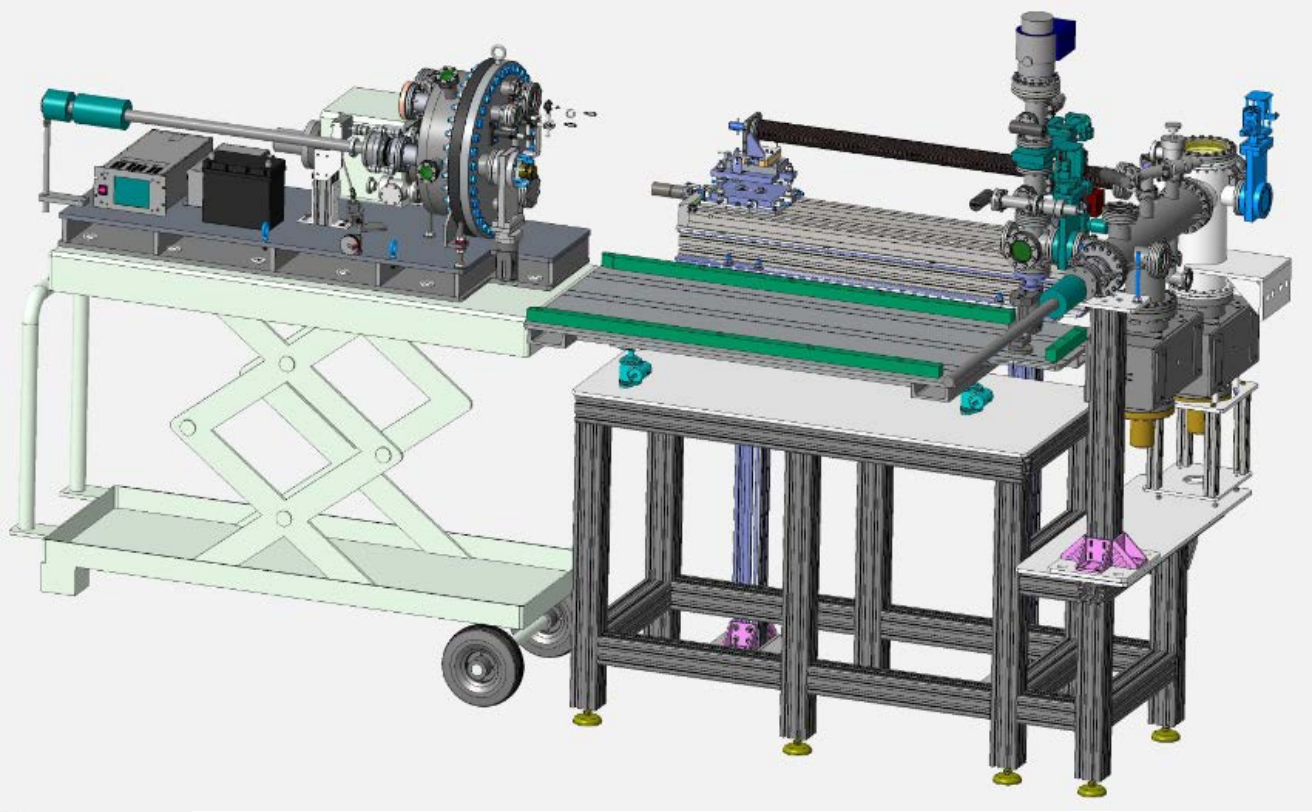

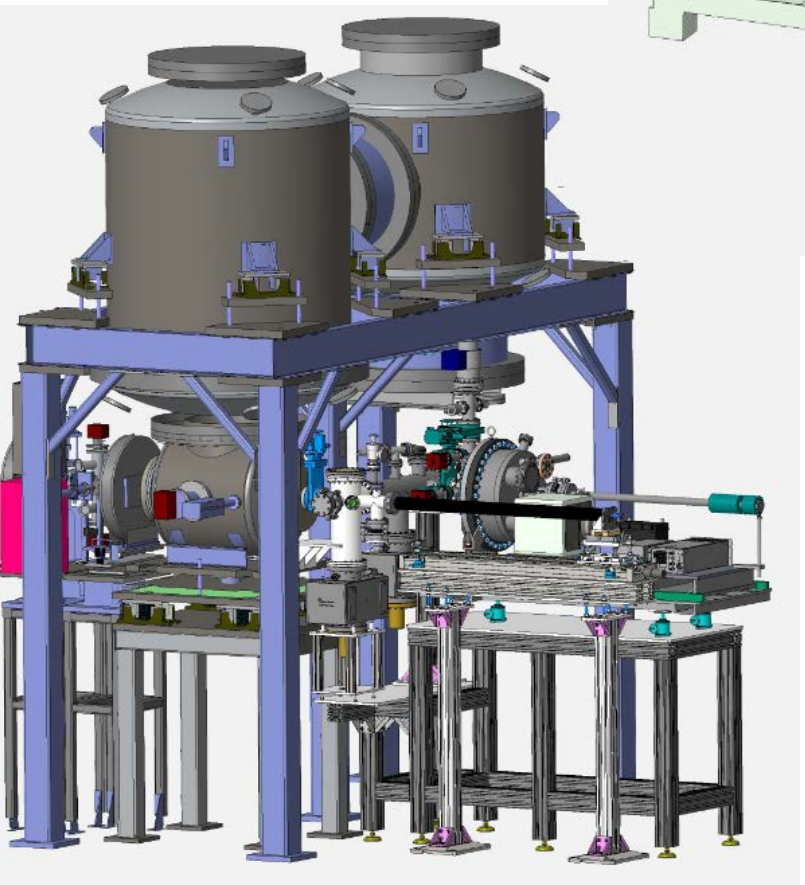

BROOKHAVEN
NATIONAL LABORATORY

RF Systems and Components

There are four RF systems in the LEReC:

- ***704 MHz SRF Gun from ERL*** will be converted to serve as a booster cavity, providing up to 2 MeV energy boost. **X-Ray Source**
  - Requires some modification for LEReC.
  - High power will be a new 65 kW high power RF amplifier

- ***9 MHz Warm Cavity*** with associated RF transmitter for transient beam loading correction is a repurposed spare system from RHIC. Low power.

- ***704 MHz Warm Cavity*** operating at a voltage up to 430 kV. **X-Ray Source**
  - Energy spread correction – new design.
  - 50 kW CW RF amplifier – retuned (from 500 MHz) IOT amplifier shared with the CeC PoP bunching cavities.

- ***2.1 GHz warm cavity*** designed to operate up to 250 kV. **X-Ray Source**
  - Correction of the RF curvature energy spread – new design.
  - New 14 kW CW solid state RF amplifier.

SRF Gun Cavity Parameters

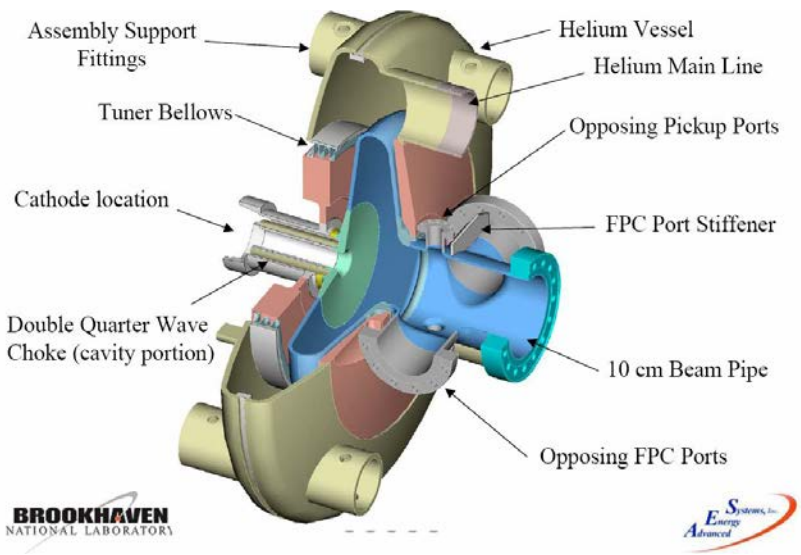

RF frequency	703.6 MHz
Cavity active length	8.5 cm (0.4 cell)
Maximum energy gain	2.0 MeV
Maximum field at the cathode	26.7 MV/m
E_{acc} at 2 MV	23.5 MV/m
R/Q_{acc}	96.2 Ohm
Geometry factor	112.7 Ohm
Cavity operating temperature	2 K
Q_{ext}	4.5E5
Frequency tuning range	1 MHz
Required RF power	60 kW (LEReC-I)
Installed RF power	65 kW

SRF Gun Conversion into a Booster Cavity

- A new beam pipe insert will be designed and built to replace the cathode stalk insertion system.
- The FPCs will be replaced with new Toshiba FPCs.
- HOM and wakefield simulations are in progress.

Gun Cavity Upstream Beam Pipe Insert

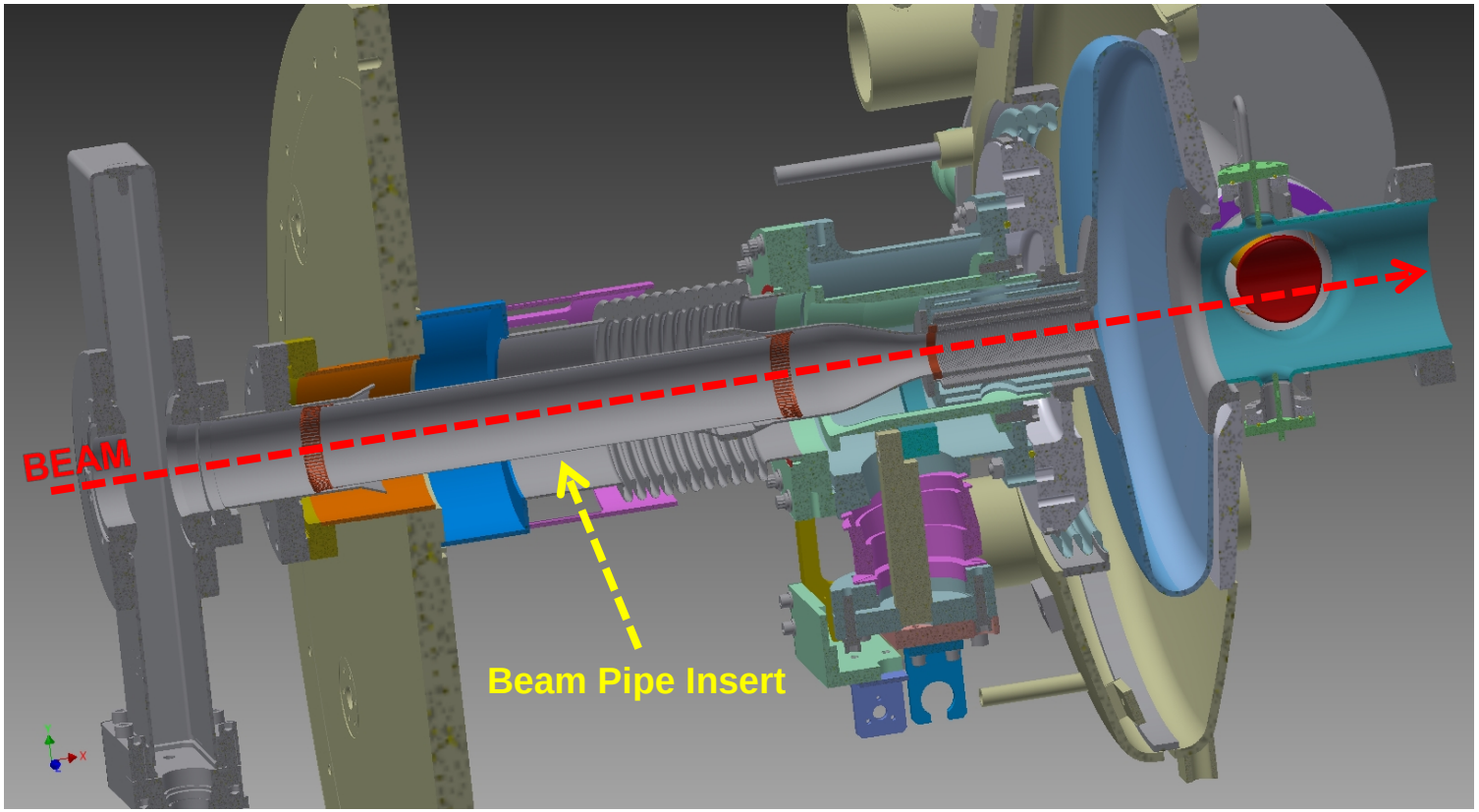

SRF Gun Conversion into a Booster Cavity

- A new insert will be designed for the downstream end to provide coupling to a ferrite HOM absorber and shielding of the two bellows.
- HOM and wakefield simulations are in progress.

Gun Cavity Downstream Beam Pipe Insert w/ HOM Absorber

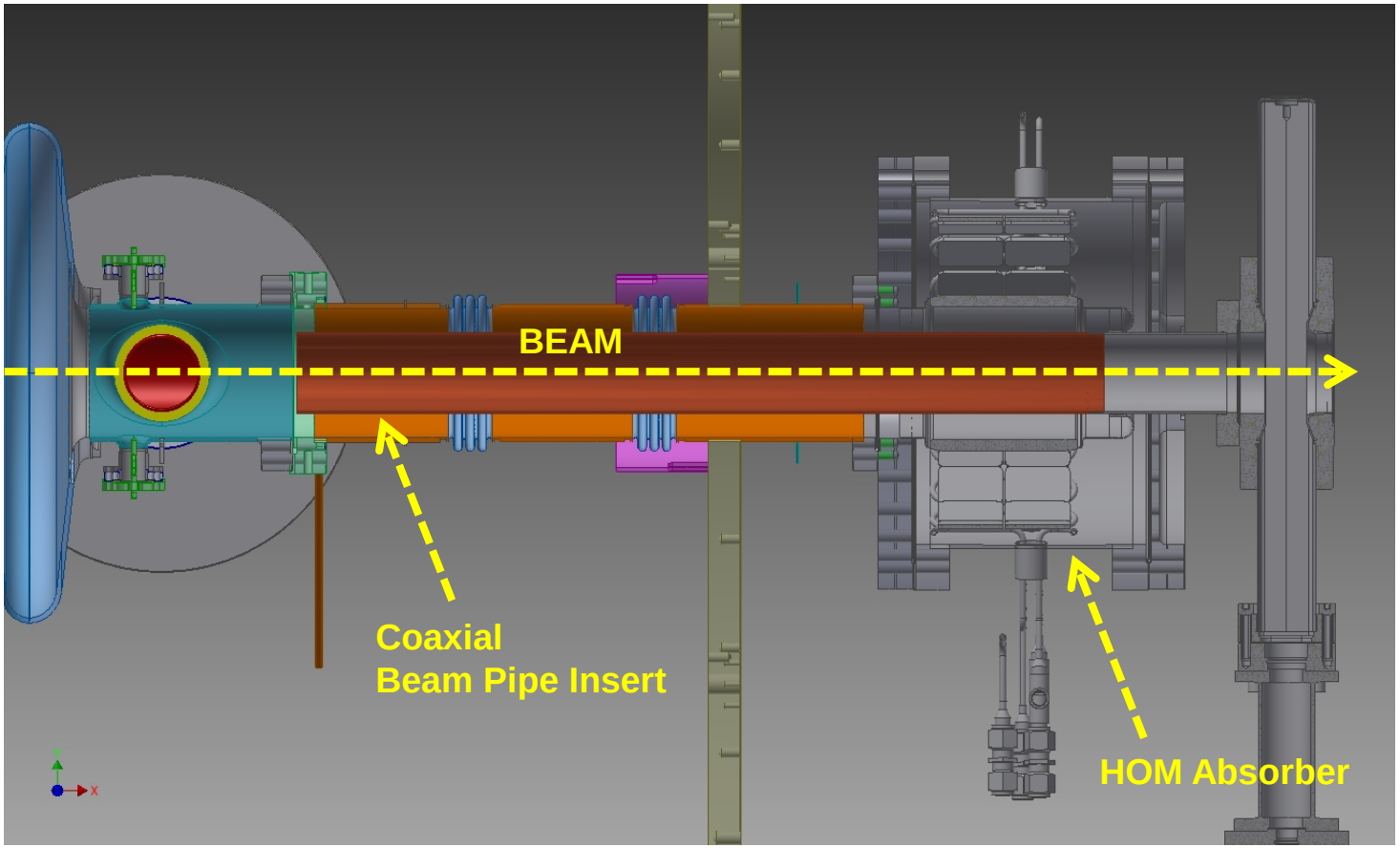

ERL SRF Gun Design Review

- No external piping modifications
- Internal modifications to reduce “vapor lock”

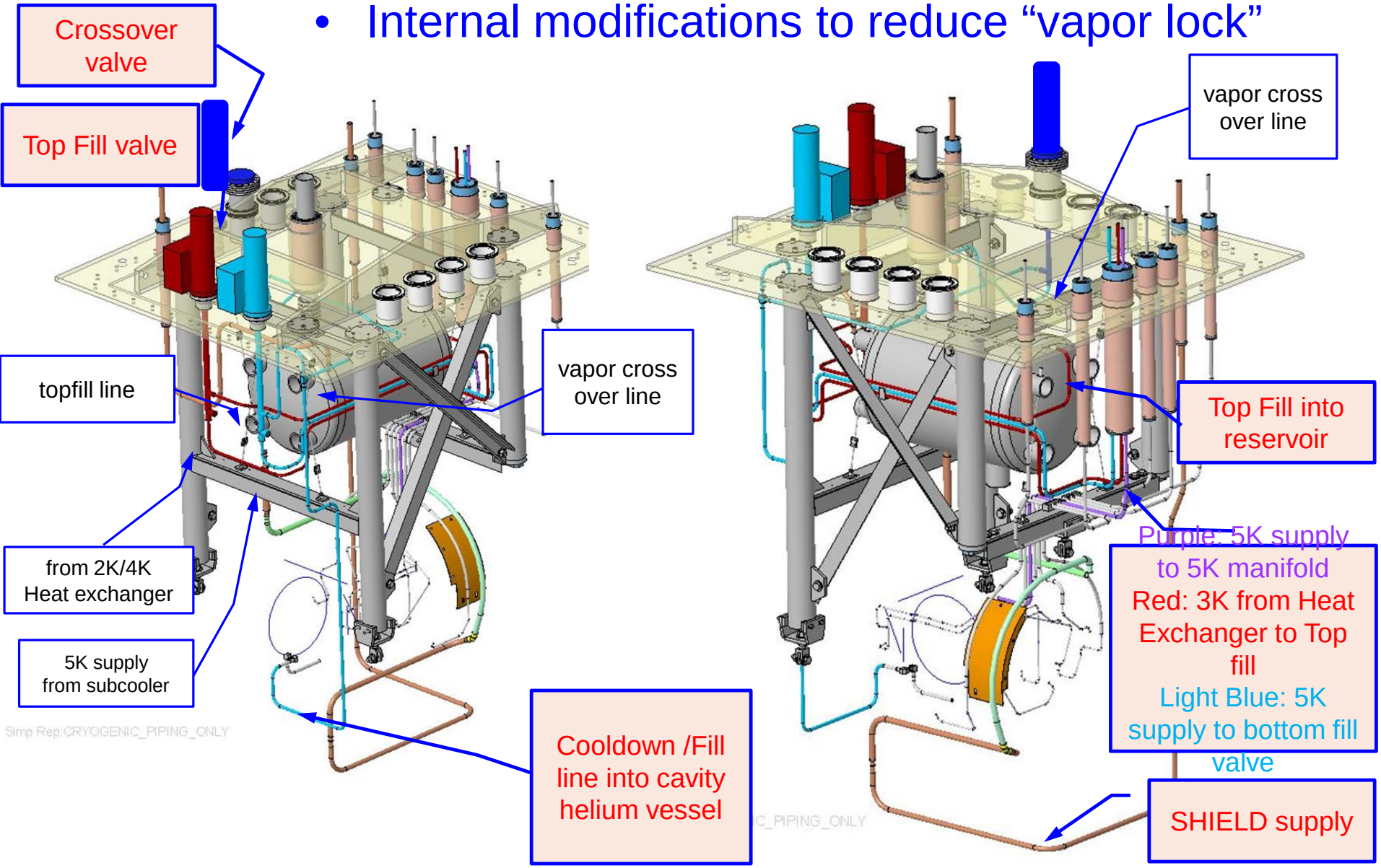

2.1 GHz cavity

CEBAF RF window

Frequency	2.11 GHz
No. of cells	3
R_{sh}	3.5 MOhm
R/Q	350 Ohm
Cavity voltage	250 kV
Required RF power	8.9 kW
Installed RF power	14 kW

- The third harmonic cavity is used to “fine-tune” the beam energy spread.
- This is a 3-cell copper structure cavity is in-house.
- The maximum voltage is 250 kV.
- There will be one choke-type frequency tuner on the center cell.
- The cavity has been delivered
- Fundamental power coupler w/ CEBAF RF window, high power tested at 1.3GHz.
- A new 14 kW RF amplifier is based on the solid state technology
- Will use WR430 waveguide.

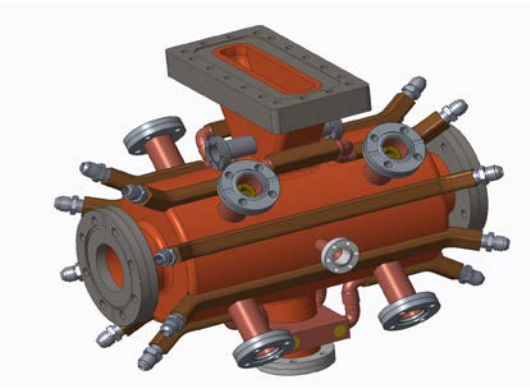

2.1 GHz Overall Layout

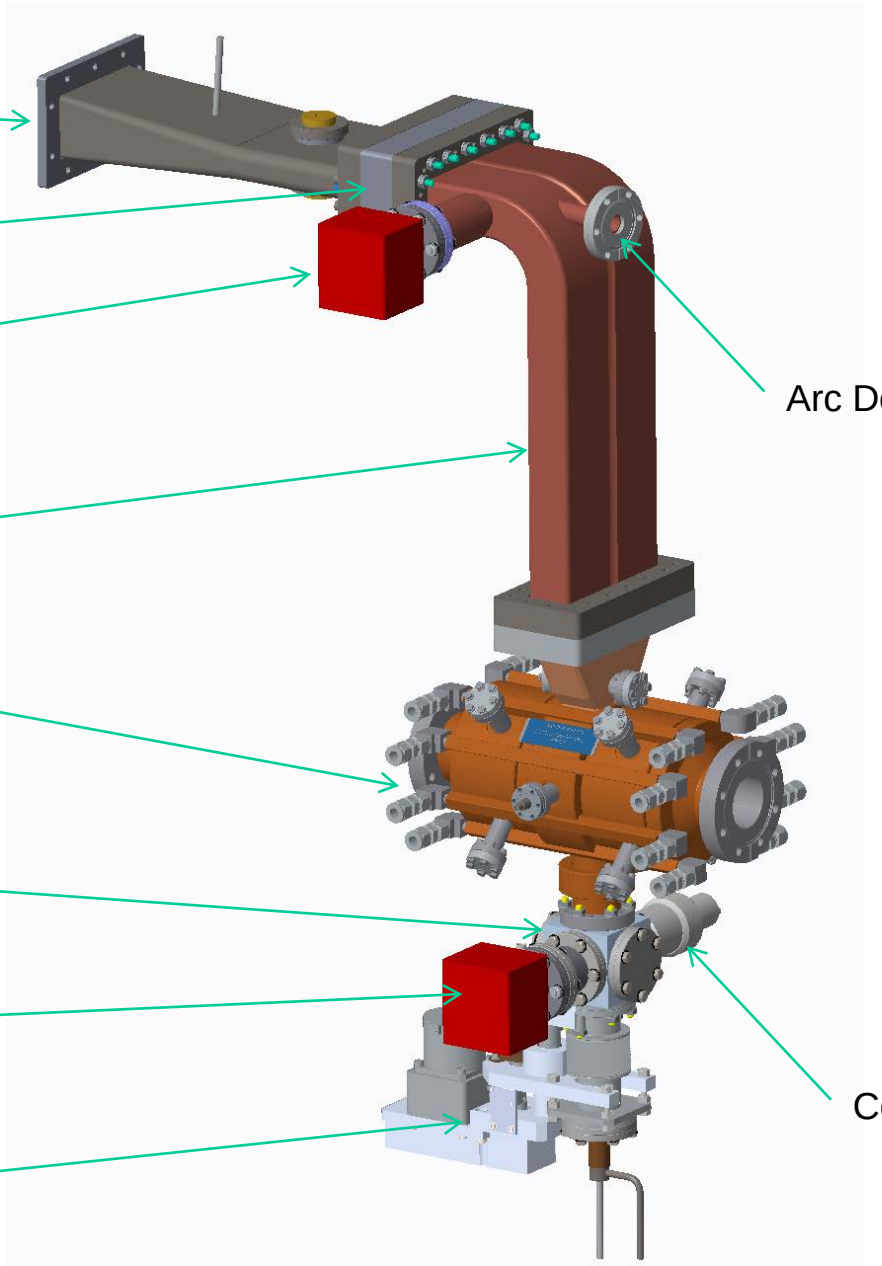

BROOKHAVEN
NATIONAL LABORATORY

704 MHz warm cavity

- Single cell 704 MHz warm cavity to correct bunch energy spread.
- The cavity is designed for an accelerating voltage up to 430 kV.
- There will be a choke-type frequency tuner.
- Round cavity to simplify the cooling channels.
- Bigger blending on tuner to lower the localized heat flux.
- Bigger beam pipe to allow HOM to leak out of the cavity to lower the voltage fluctuation from HOM's.

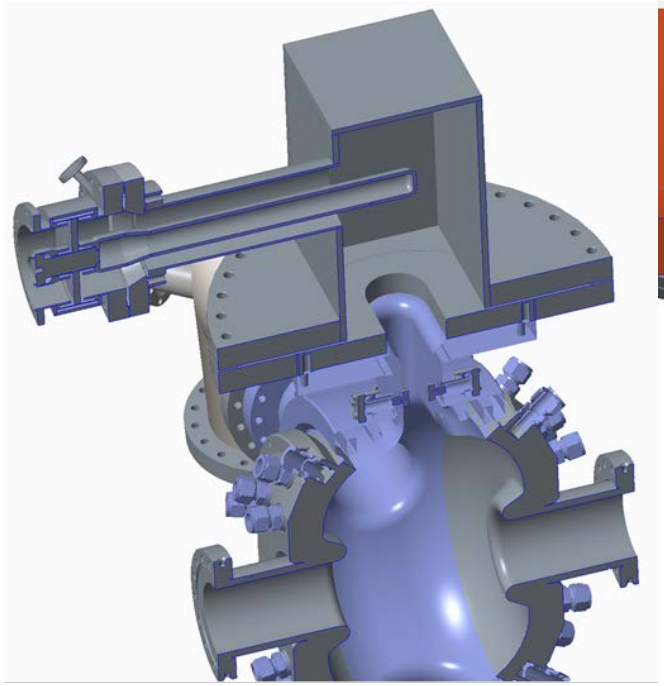

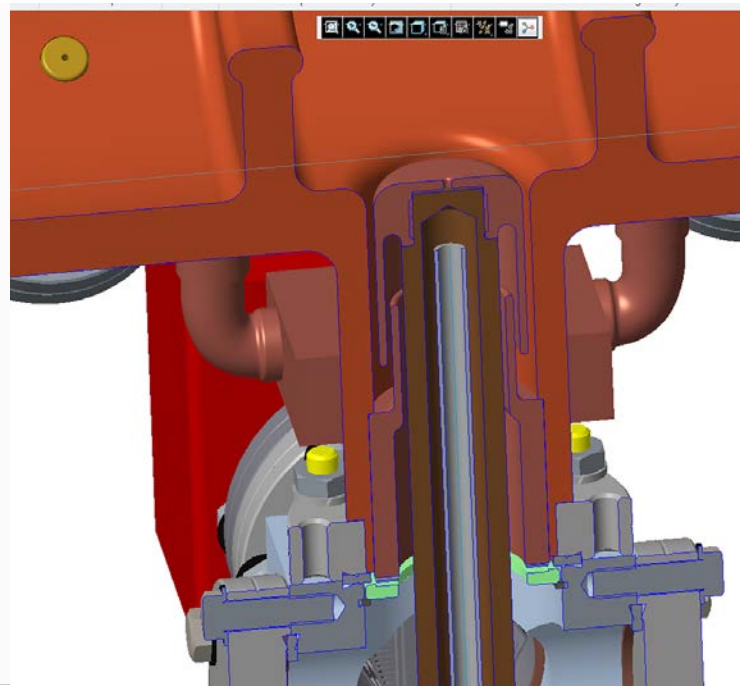

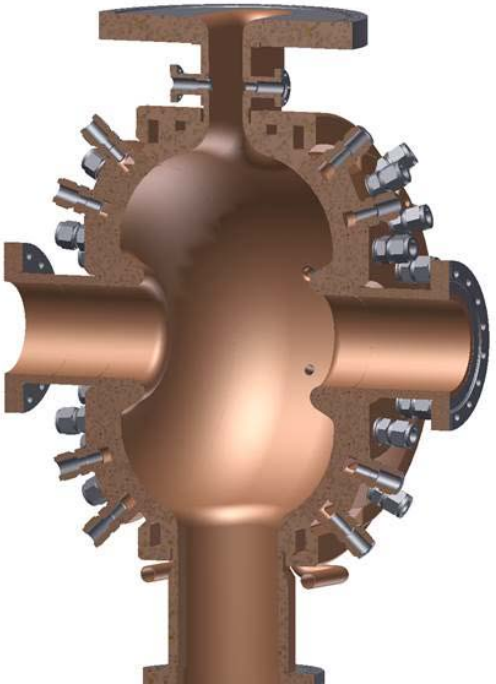

704 MHz warm cavity parameters and major RF components

RF window

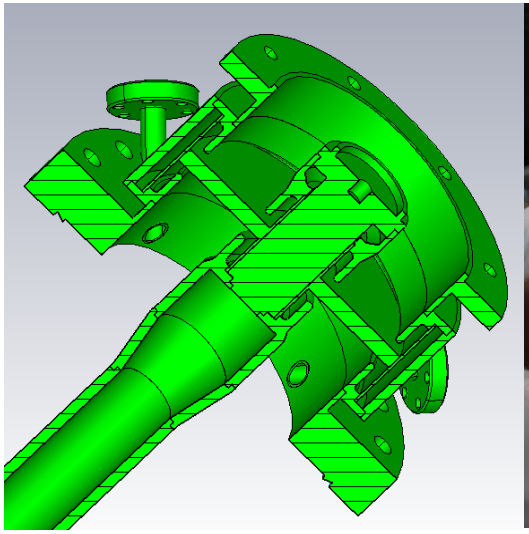

Frequency	703.6 MHz
No. of cells	1
R_{sh}	5.0 MOhm
R/Q_{acc}	178 Ohm
Cavity voltage	430 kV
Required RF power	37.0 kW
Installed RF power	50 kW

- The cavity has been ordered from industry.
- The RF window from Toshiba Electron Tubes & Devices Co, originally for 704 MHz 5-Cell SRF cavity.
- The RF amplifier is a 50 kW, 704 MHz, new PA ordered from industry.
- Coaxial line, circulator, RF load will be ordered.

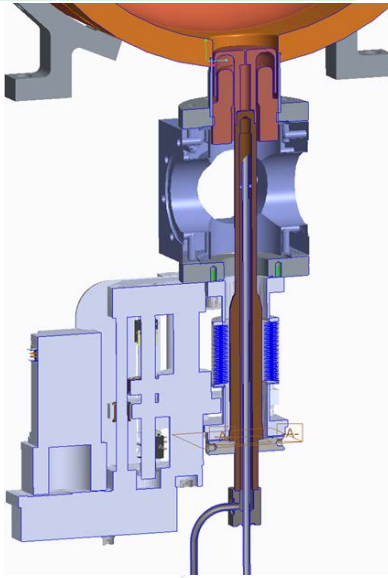

9 MHz Warm Cavity

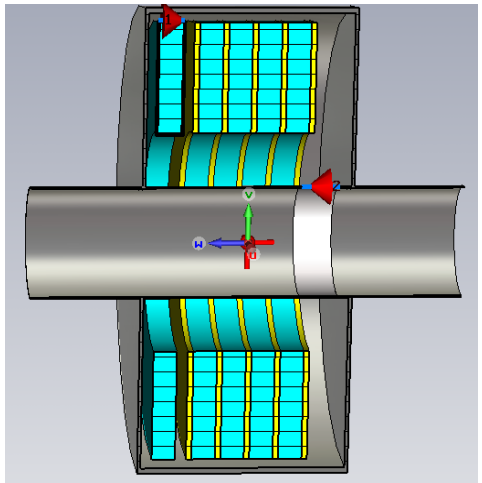

- This is an existing spare 9 MHz cavity and RF amplifier from RHIC.
- It will be installed and used in LEReC to compensate the linear bunch-to-bunch energy variation along the 30-bunch long trains. This variation is due to transient beam loading effects in other cavities.
- The cavity voltage is 3 kV pk.

Digital LLRF for LEReC

- All LEReC LLRF systems will use variants of the digital LLRF Controller developed at C-AD.
- Such controllers are now in operation at all RF systems (warm and superconducting) in the RHIC accelerator complex.
- The LLRF electronics will be reused from ERL (SRF gun), shared with CeC PoP (704 MHz warm cavity) or built new (9 MHz and 2.1 GHz warm cavities).
- Orders are being placed for required new hardware.

RF Systems Summary

- There will be four SRF/RF systems in LEReC: 704 MHz SRF booster cavity; 9 MHz energy correction cavity; new 704 MHz and 2.1 GHz warm cavities.
- The SRF booster cavity commissioning with modifications will be completed in bldg. 912: FPCs will be replaced with new Toshiba FPCs; inserts to reduce impedance and shield bellows; HOM absorber. The cavity performance with all the modification has to be demonstrated in Bldg. 912.
- The three cell 2.1 GHz warm cavity & single cell 704 MHz warm cavity has been designed & ordered from industry. The cavity parameters are within state of the art.
- A spare 9 MHz warm cavity system is available from RHIC, will be used for beam loading compensation.
- High power RF amplifiers use standard RF technology (IOTs, solid state).
- Digital LLRF systems are based on the existing design deployed everywhere in RHIC. The design is very versatile and demonstrated good reliability in operation.

BROOKHAVEN NATIONAL LABORATORY

LEReC Interlocks Access Controls System(ACS) Exclusion Zones for CeC PoP

J. Reich, D. Hillis

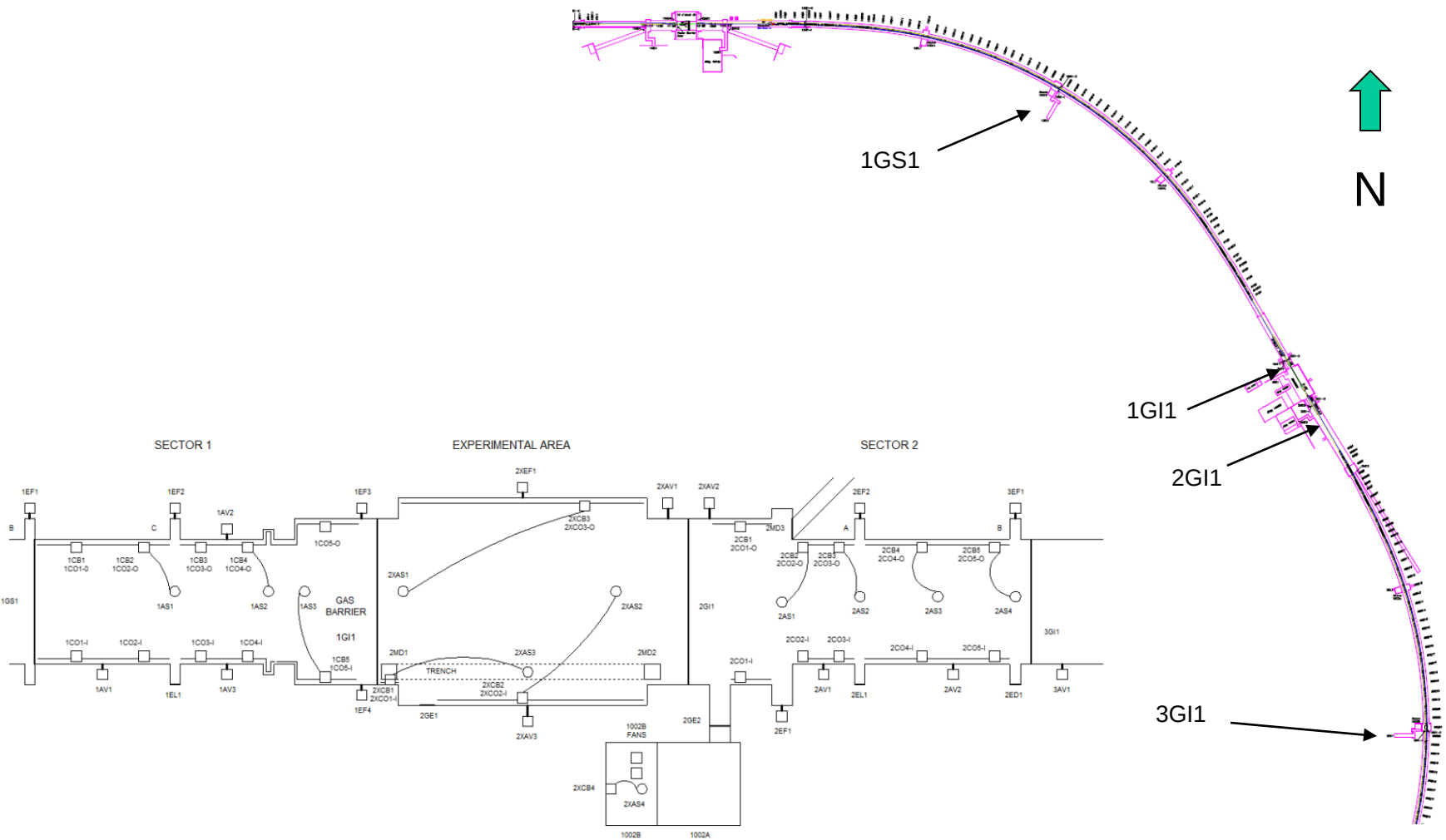

BROOKHAVEN NATIONAL LABORATORY

ACS for CeC Radiation Protection

- Incorporated into existing RHIC PLC base Safety Instrumented System(SIS). Separate A and B protection chains for RHIC 1002 exclusion zones. Operating 15 years with no unsafe failures + Based on CeC

- Primary Critical Devices 02:00:
  - CeC: 112 MHz SRF cavity PS, 500MHz warm cavity PS, and 704 MHz SRF cavity RF PZ.
  - LEReC: DC Gun HVPS, 704 MHz SRF cavity PS (2017), 2.1 GHz warm cavity PS, 704MHz warm cavity PS, 9 MHz warm cavity PS, 704 MHz warm diagnostics cavity (2017)

- AC input contactors, Two per power supply. A and B chains control and monitor one contactor each for each power supply. (dissimilar manufacturers)

- Reach Back Critical Devices: Three RF Coaxial Switches to control RF drive signal for each RF cavity. A and B divisions control and monitor the same coaxial switch for each cavity.

ACS ODH Protection

- The RHIC CeC exclusion zones and service Bldg. 1002B are protected by the existing chemical sensor based ODH monitoring and alarm system and will activate fans, vents, and audible/visual alarms if an event occurs. This system is incorporated into the RHIC SIS.

- The 1002A compressor room is protected by a separate ODH monitoring and alarm system which will activate a fan and audible/visual alarms if an event occurs. The sensing and alarm unit is a tunable diode laser spectroscopy air pump sampling unit. (Manufacturer: Oxygraf, Model O2iM)

ACS Documentation and Procedures

- RHIC 1002 ACS specification State Table, QA-A1
  DWG# C1010018

- QA-A1 electrical schematics

- Certification Procedures - OPM 4.120

- Various OPM procedures 4.91, 4.92, …

EP&S Support

- Work Platform (Dave)
- Power for DC Gun PS & Cleanroom fans & lights (PK, Dennis)
- 1002D power and cable tray installation (Don, PK, Dave)
- Tunnel penetration for laser transport (Dave, Bob, Zhi, Steve)
- Tunnel penetration for 704 MHz cavity coax (Dave, Cliff, Bob)
- Custom shield blocks for laser optics tables (Dave, Bob, Zhi)
- 1002F Vibration mitigation – move laser building
- 1002B additional RFPA, install wave guide and coax

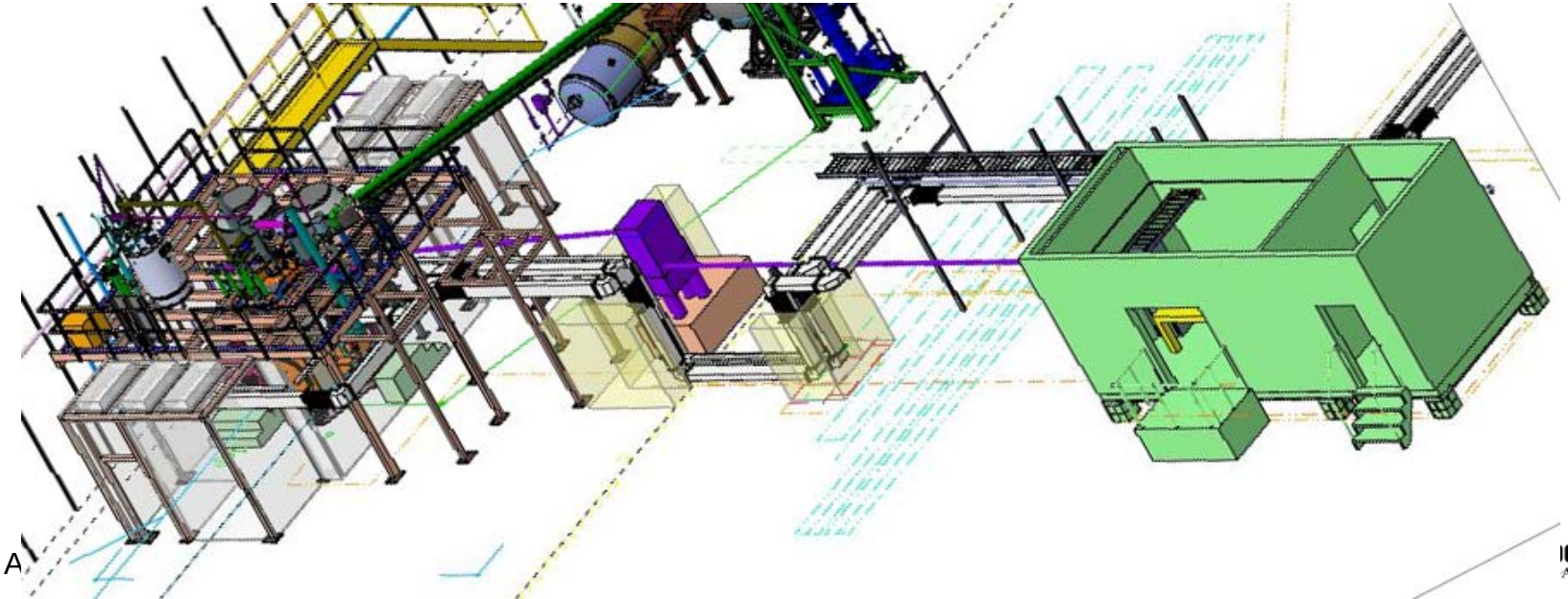

Work Platform

- Large Rexroth frames platform for cryogenic and DC gun PS access.
- Platform access (old Brahms stairs) and railing to BNL requirements.
- Clean room area below for beamline installations – required for SCRF Booster Cavity and DC Gun.
- “gowning” entrance on the north side/exit south side + soft walls
- Walk-through area at wall

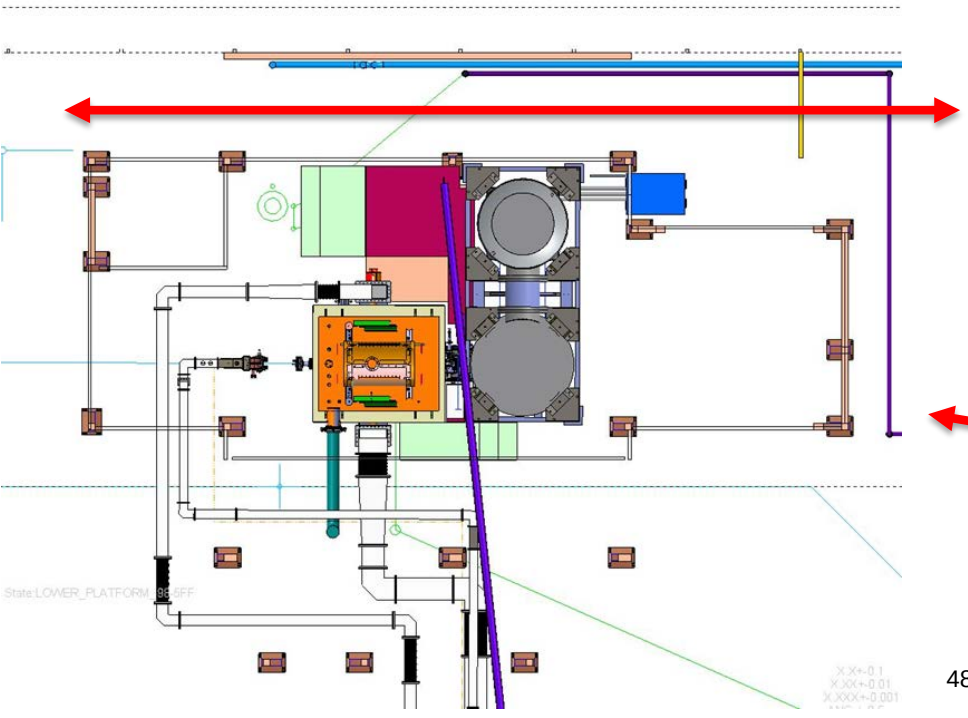

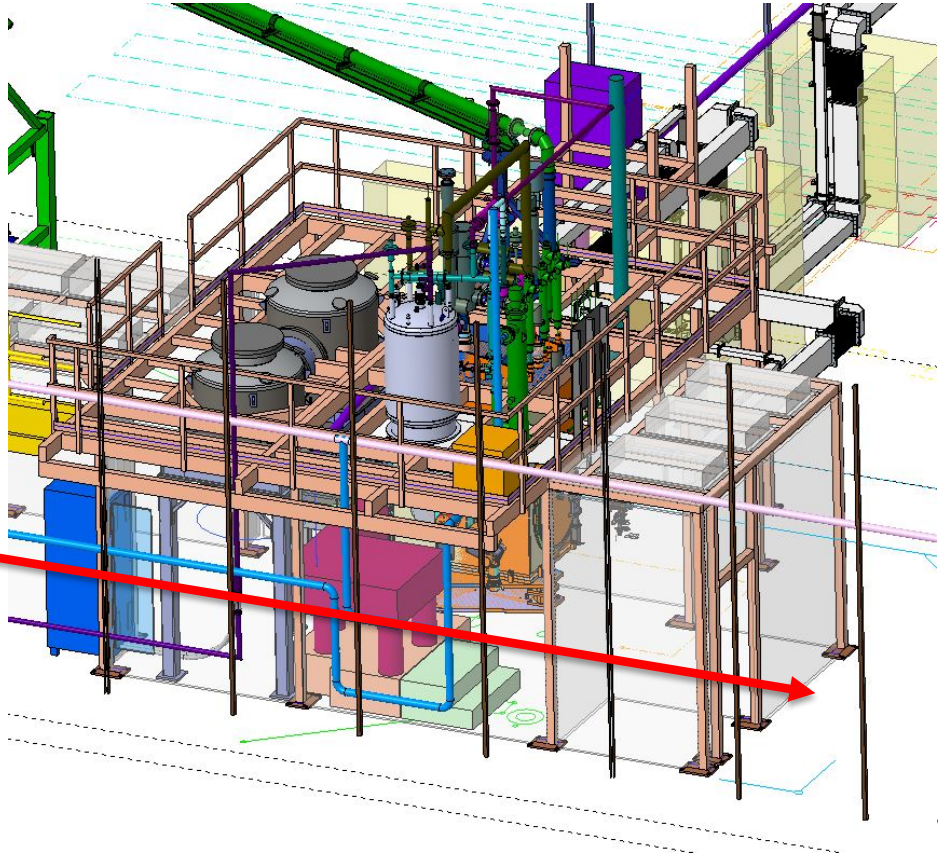

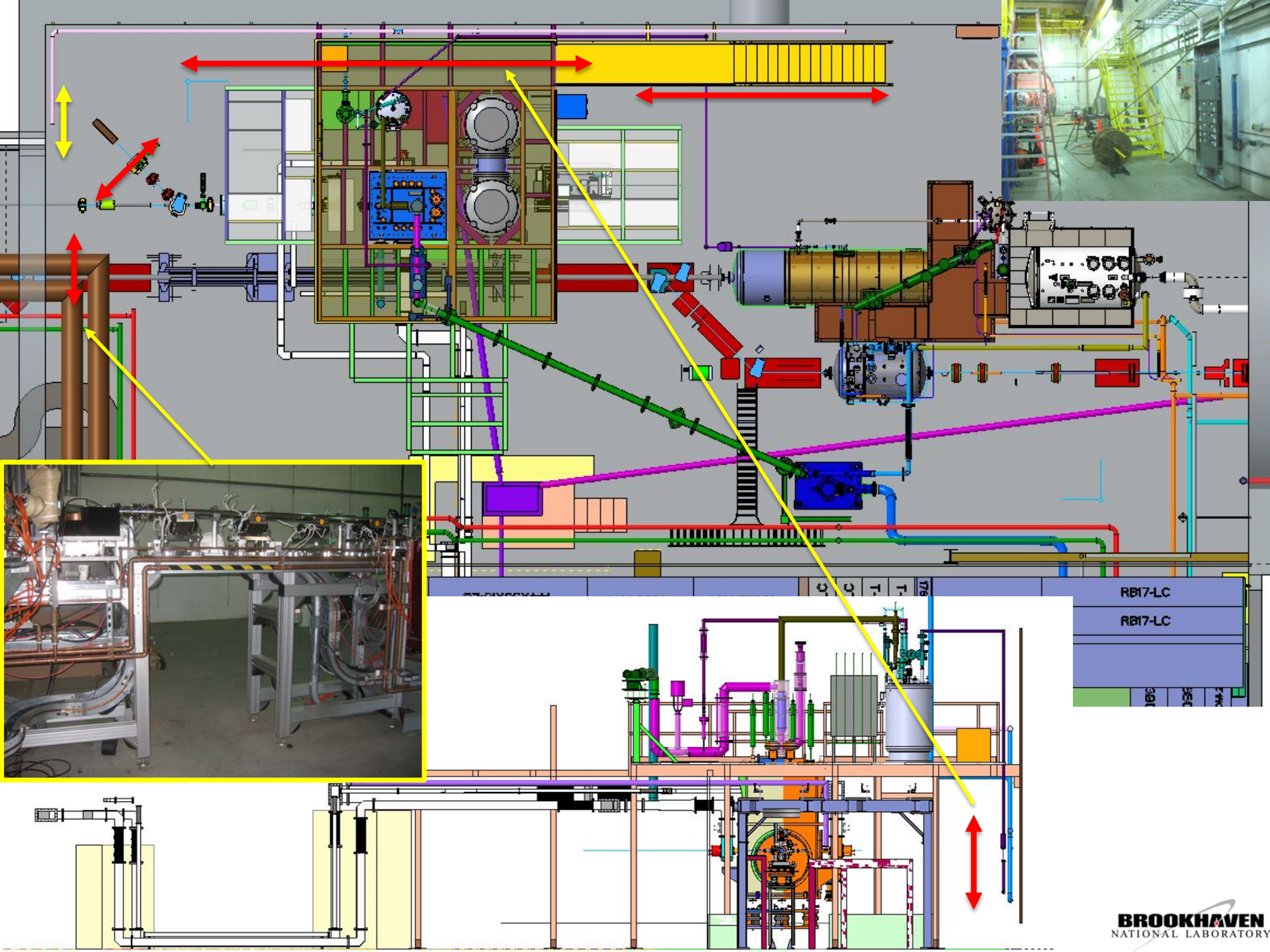

BROOKHAVEN
NATIONAL LABORATORY

DC Gun Commissioning Dump

- Lower energy beam - smaller shielding foot print.
- Provide 25 to 30 inch space for access near wall.

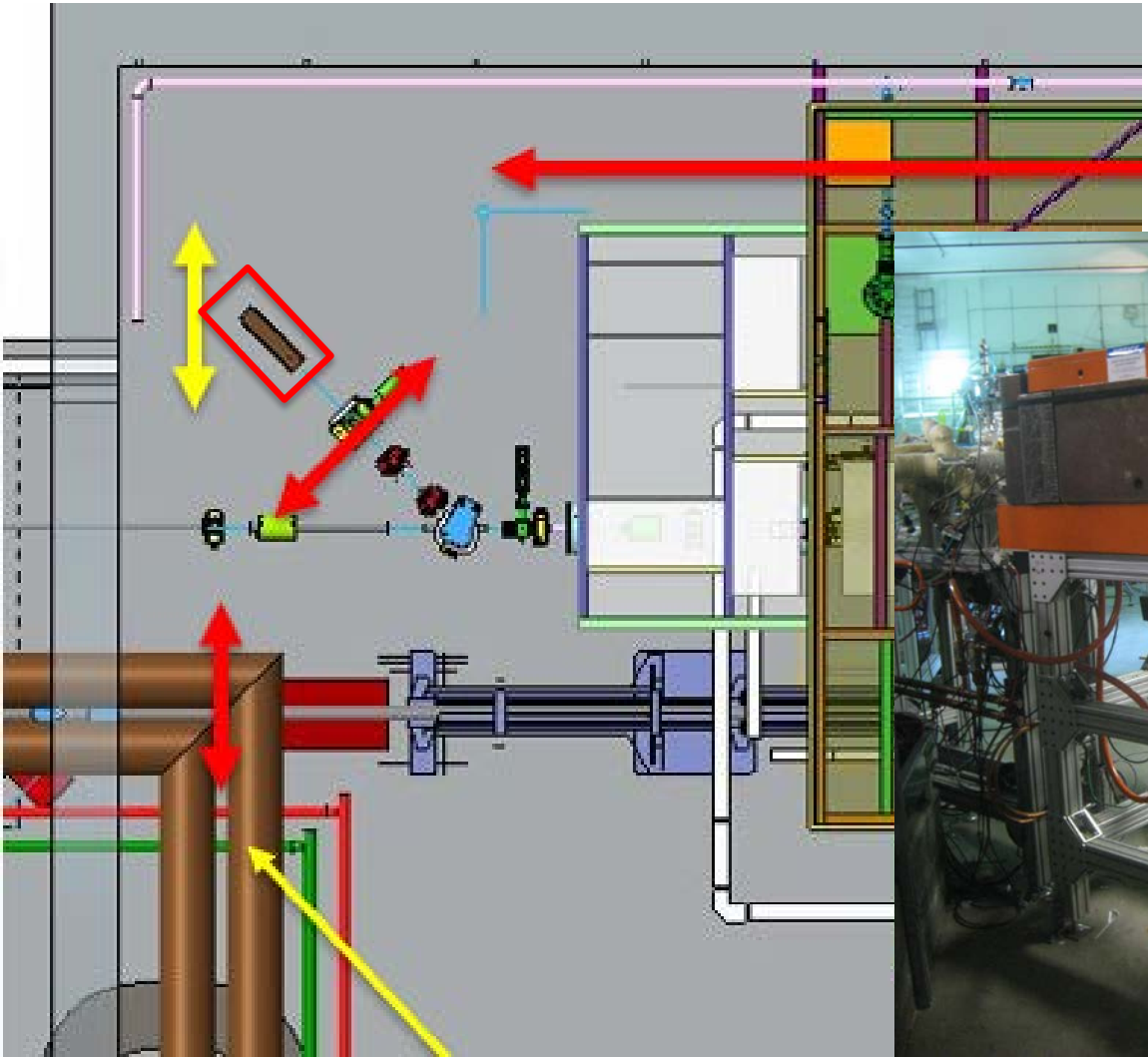

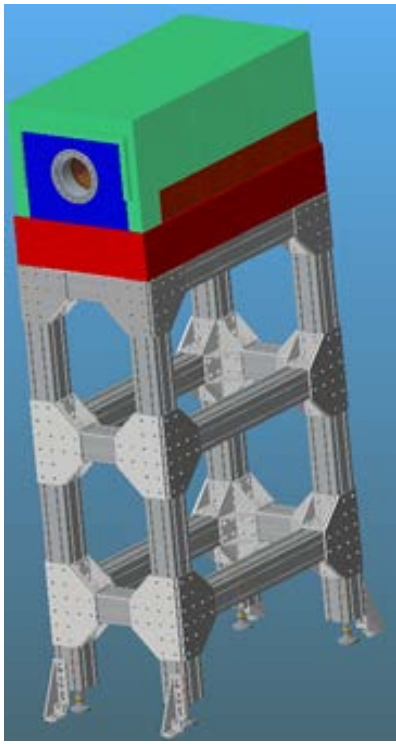

Aisle Space

- Outer Aisle (transport beam line) has been set by beam optics.
- Inner Aisle space is set by beam dump location
- Working to move dump close to cryostat
- Allow for 4” minimum shielding between dump and cryostat

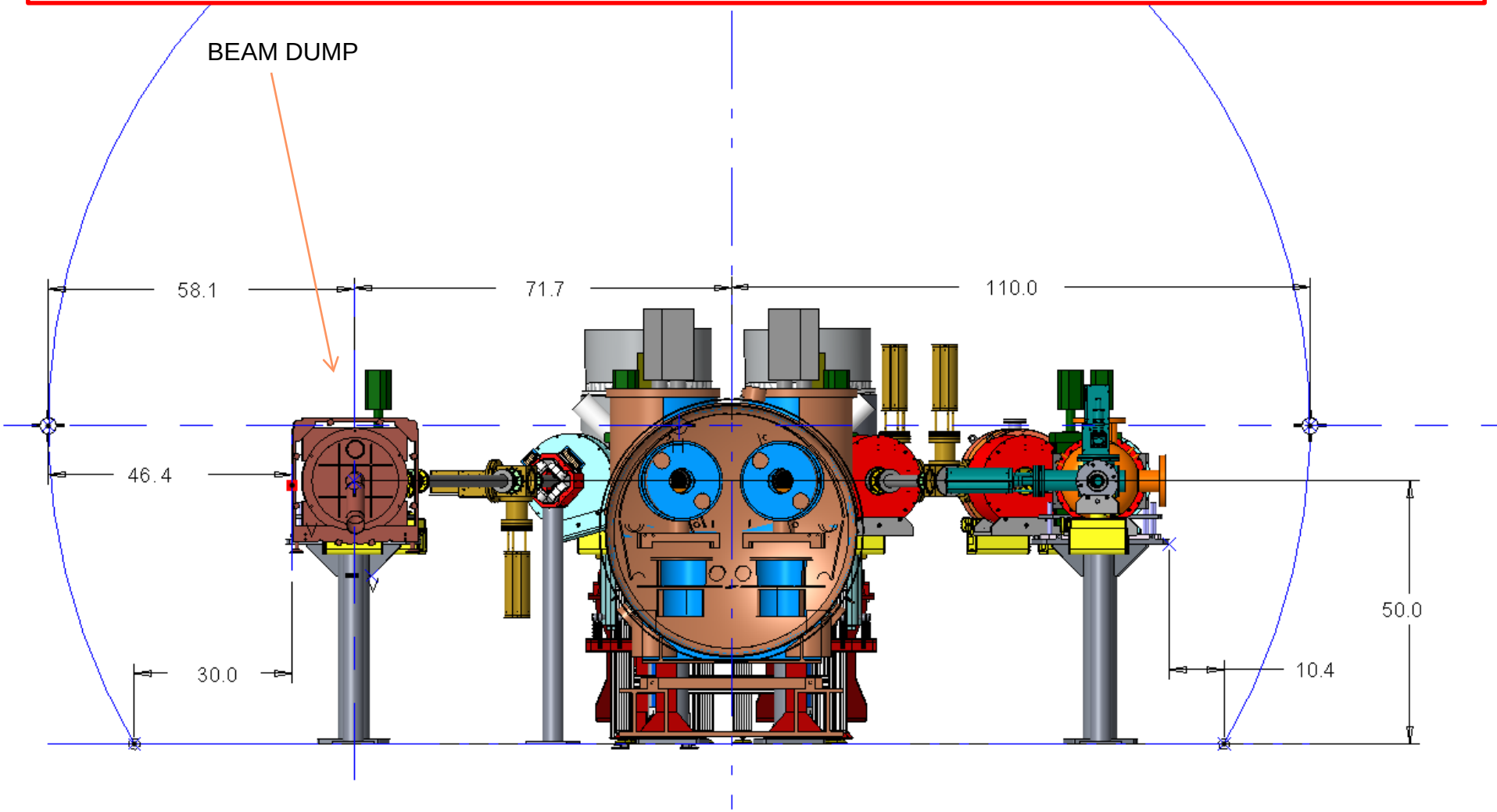

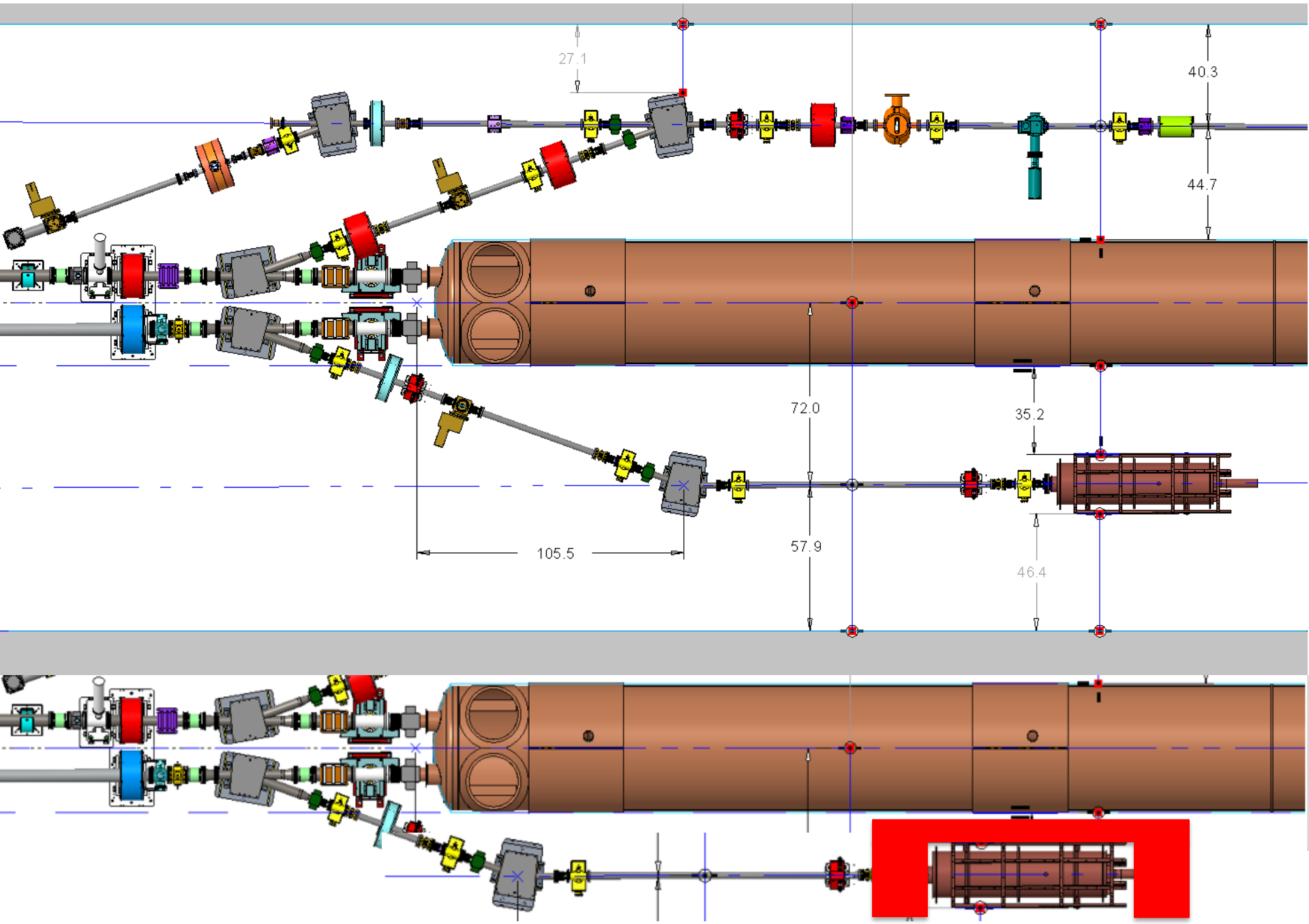

BROOKHAVEN
NATIONAL LABORATORY

Work Area Near Gun and Booster Cavity

- 0.8 meters between DC Gun flange and SRF Booster Cavity flange
- Need access for SRF cavity tuner and FPC maintenance and repair
- Laser needs to be as close as possible.
- Laser table extension will be removable for maintenance.

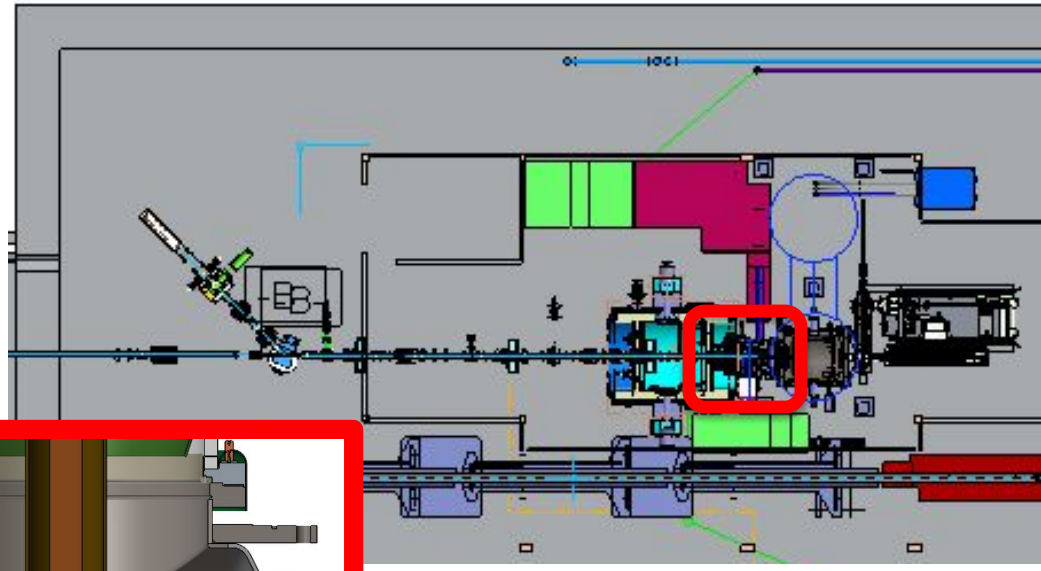

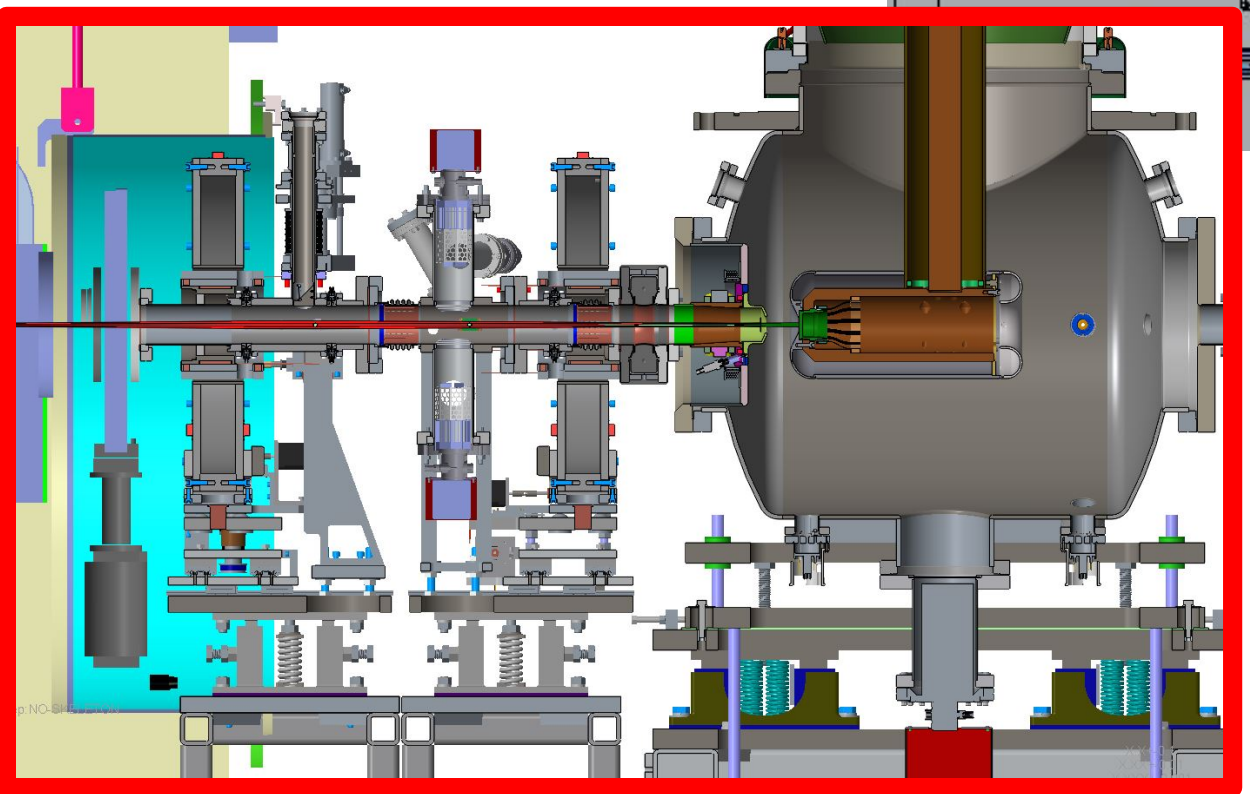

BROOKHAVEN NATIONAL LABORATORY

Completely Utilized Work Areas

- 1002A instrumentation space is near full, AC running at limit.
- 1002A industrial space has open mezzanine, no AC.
- 1002B is near full, 3 new RF PA's has taken last available space near roll-up door.
- 1002D "Brahms" trailer has some available space, lacks water cooling.
- Required aisle space and egress spacing has been maintained.

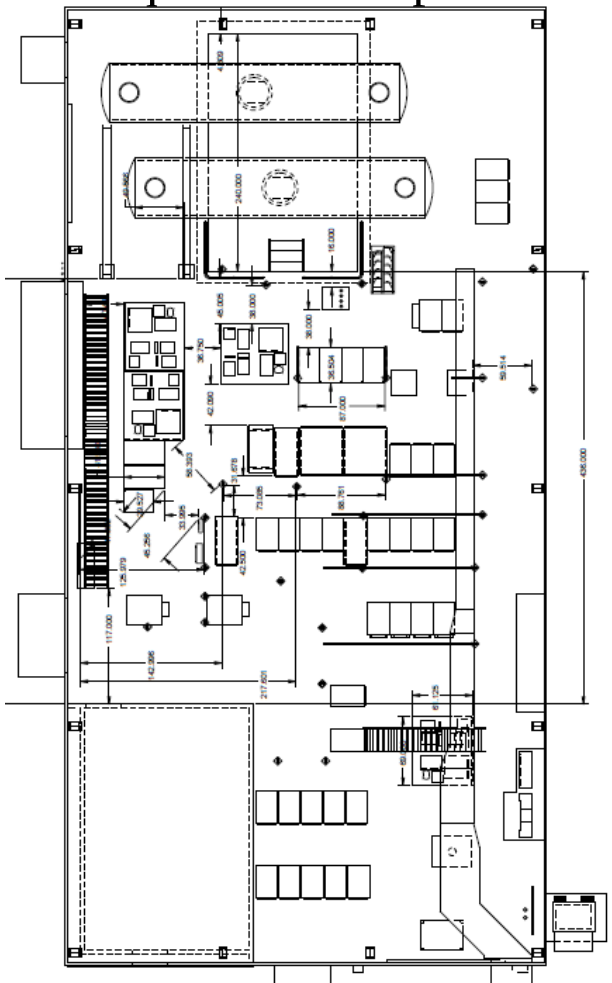

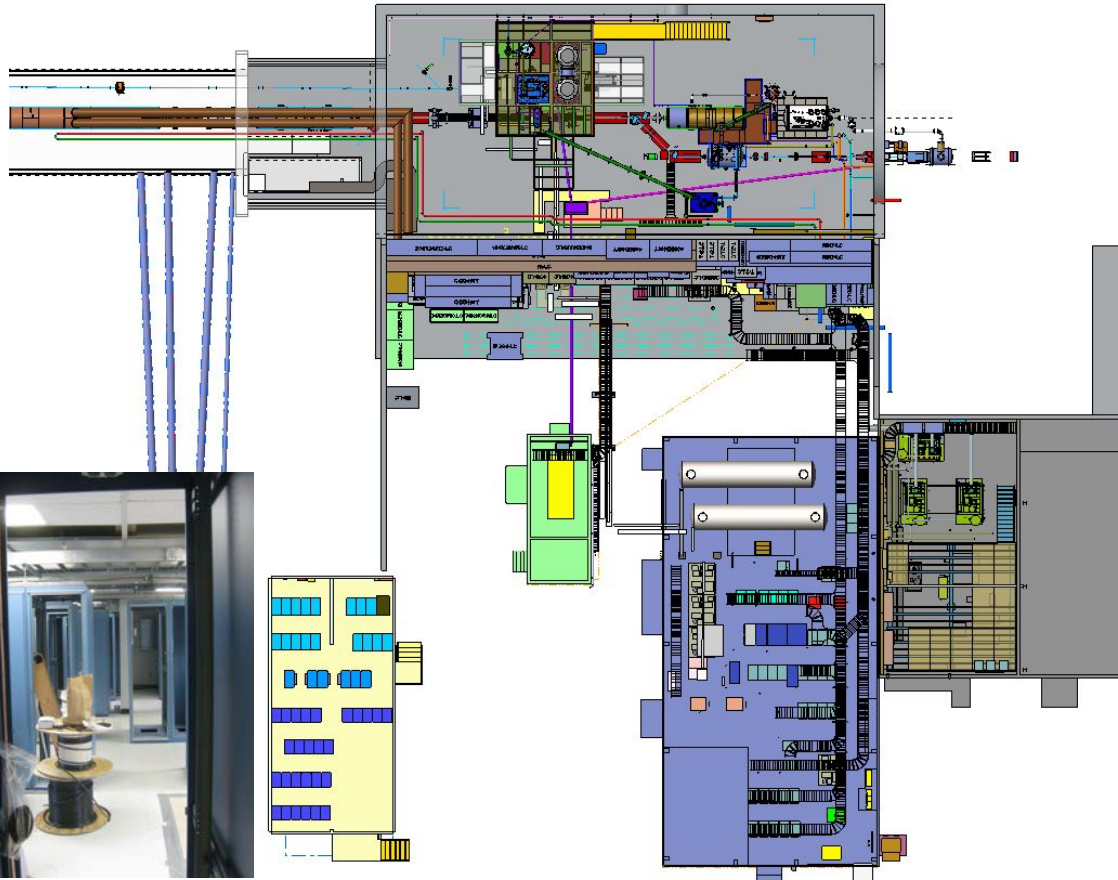

Instrumentation Systems Group T. Miller/D.Gassner

Risks & Hazards:

- High Voltage bias on PMT beam loss monitors
- High Voltage bias on ICE via SMA connectors
- Bias voltage on beam dump
- Pinch points on beam line devices that have motion control
- Class IV laser fiber transport for Power-Over-Fiber link to Gun current monitor

Mitigations:

Beam Loss Monitor High Voltage, Typical bias at 1kV
6kV, 3mA, finger safety rated SHV connectors
Ion Clearing Electrode Bias Voltage
Safety Wire & Tag
Beam Dump Bias Voltage
Safety Cover
Motion Pinch Points
Safety Covers
Class IV IR Laser
Covered Fiber Connection Points

High Voltage Bias

Beam Loss Monitors

PMT Detector (similar to JLAB-CEBAF, FEL)

(Hamamatsu R11558 PMT)

Fast (<10us), HV tunable for sensitivity adjustments

50dB DR (5nA – 100uA from tube)

Limited coverage, small cross section

BLM Electronics

The new version of BLM electronics developed at JLAB for the 12GeV upgr will be used for the PMT detectors.

HVPS

4kV, 3mA/ch, 6ch VME based bias power supplies, **SHV** connectors, built by CAEN S.p.A.

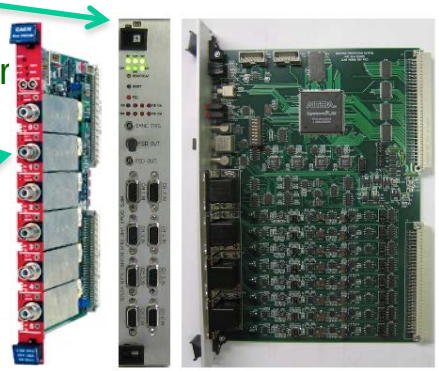

Features:

- Provide both machine protection and diagnostic functions.
- Instantaneous readback of beam loss.
- 16 bit digital output for integrating and logarithmic signals.
- Fast response, << 1 μs response time for integrating, 10 nA^2 for log.
- Wide dynamic range (>50 dB) for logarithmic signals.
- Built-in self test and onboard signal injection.
- FPGA controlled.
- Local data buffer for integrating and logarithmic signals.
- VME interface and fully integrated into EPICS.
- Pulse beam measurement and continuous monitoring.
- Low cost (≤$100 per channel).

New Beam Loss Monitor for 12GeV Upgrade
J. Yan, K. Mahoney, ICALEPCS 2009

Ion Clearing Electrode Bias

DC Gun to Booster Cavity Beam Line

- Bias voltage on BPM style buttons.
- SMA feedthrough connectors
- Safety wire connector to fixed point
- Danger High Voltage Tag

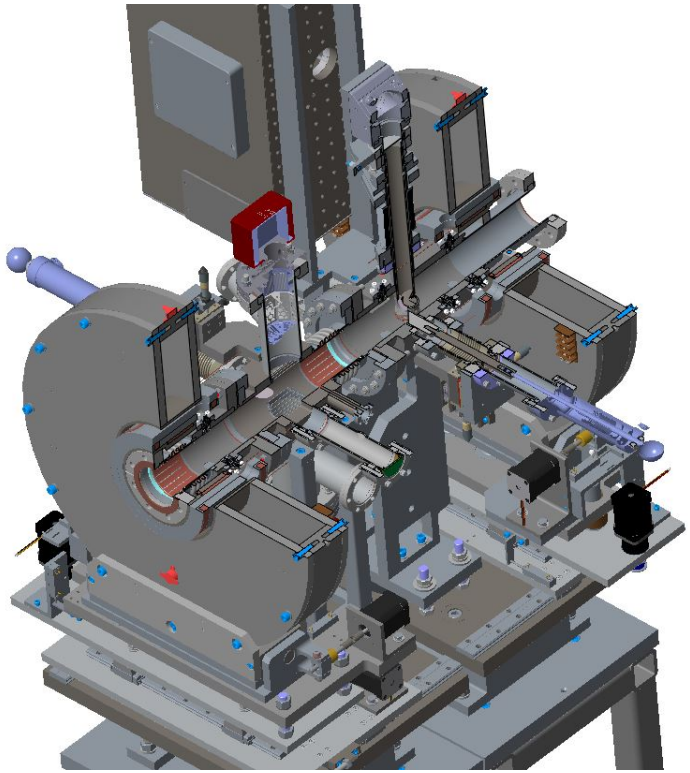

BROOKHAVEN
NATIONAL LABORATORY

Beam Dump Voltage

- **Low Power Beam Dump – Faraday Cup**
  - Isolated
  - Possible voltage bias
  - Plastic cover over entire dump
  - Bias voltage < 1kV
  - (Typically run without bias)

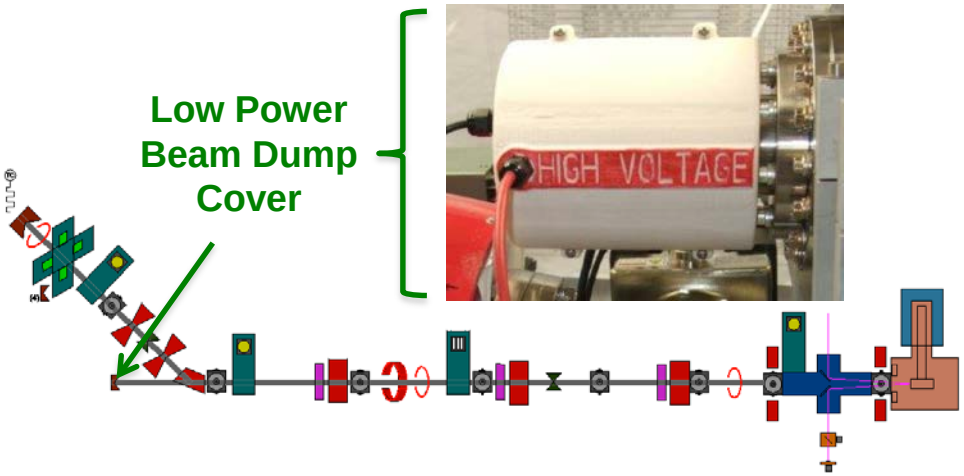

- **Higher Power Beam Dump**
  - Isolated
  - Covered by lead/steel shielding
    - Plastic covers added to any exposed beam pipe at dump potential
  - Bias voltage < 1kV
  - (Typically run without bias)

High Power Beam Dump (Isolated)

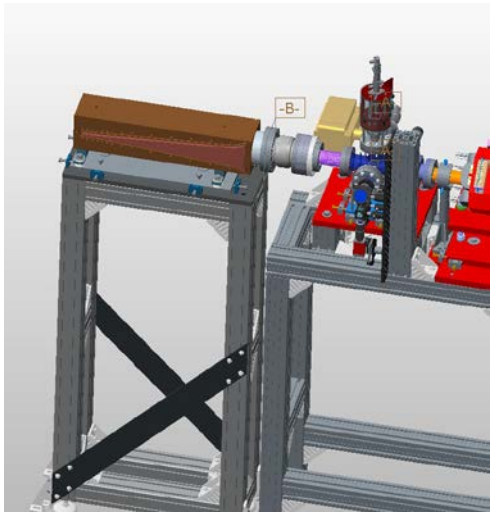

Pinch Points – Motion Control Diagnostics and RF

- **Pneumatic Actuators**
  - **Pinch points**
  - **Clear plastic covers**

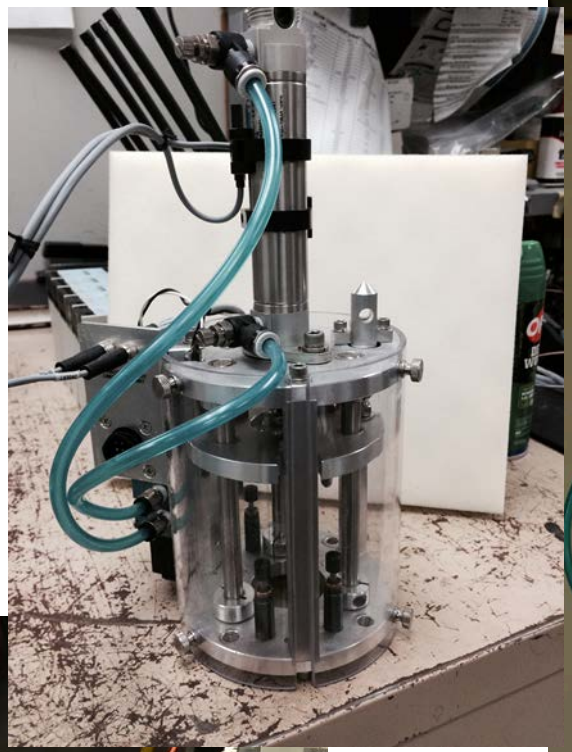

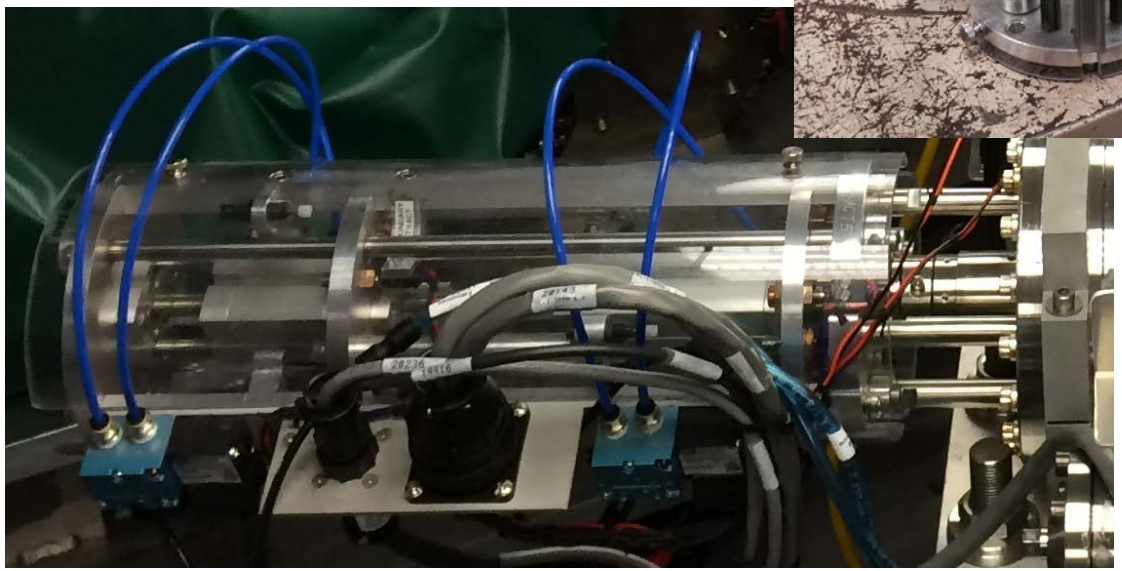

Class IV IR Laser over Fiber for DC Gun

- Power-Over-Fiber Kit
  - Photonic Power Module with FC Connector
  - Lumentum 22015409-002
  - 1 – 2 W IR laser (790 – 980nm)
  - 62um mm fiber
  - Supplies 500mW of power to 600kVDC platform
  - Fiber bulkhead (ST connector) feedthroughs into SF6 tank
- Mitigation:
  - Fiber protected in flex conduit
  - Feed through & Laser module in interlocked enclosures.
  - Proper Laser Hazard tags applied.
  - **Reviewed by LSO** (C. Weilandics)

Show photo of fiber feedthrough on SF7 tank.

Vacuum Components

- Typical Vacuum Parts
- HV supplies for ion pumps
- Vacuum bakeouts in and near RHIC and at the upstream end: cathodes, gun, G2B, & downstream near booster cavity

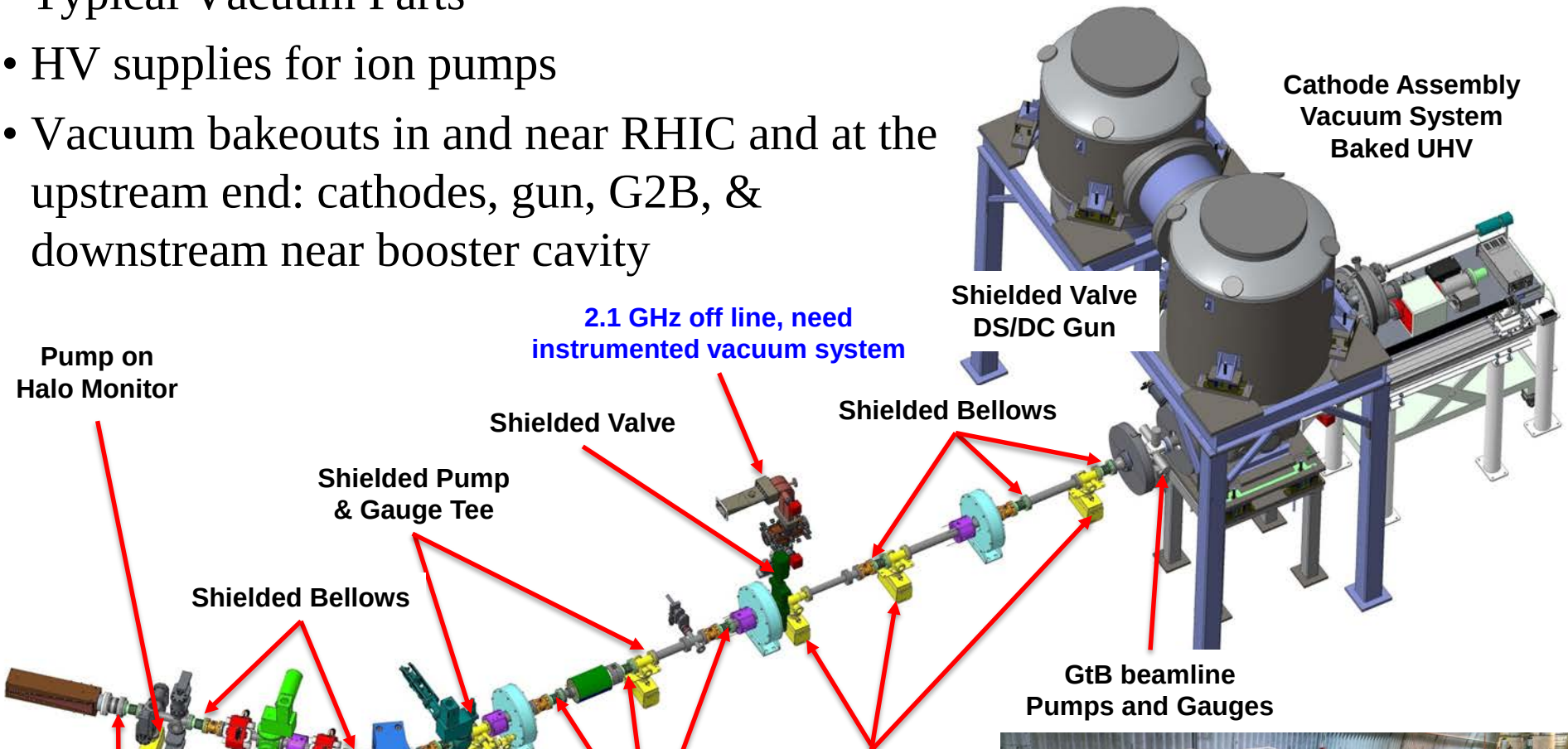

Magnets and Power Supplies:

- ~ 128 DC magnet power supplies (next page)
- Solenoids – (4) types
- H/V corrector magnets (3) types
- Quadrupoles (1 to 2) types
- Dipole magnet (3 to 4) types
- **EEI inspection to be done before testing**
- **One fast switching dipole and power supply (to clear remnant field)**
- **2 solenoids with motorized positioning systems (covers for pinch points)**

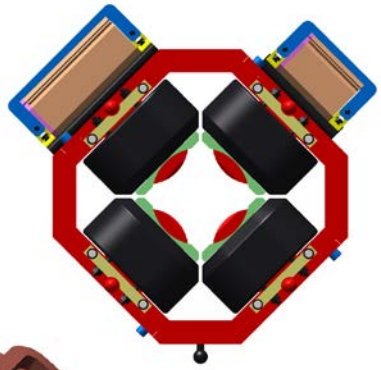

7/7/16
Phase 1 Block 27.vsd
127 ps's total
(3 replaced by booster)

Gun Injection Section

1. **1 p.s.** Kaiser High Voltage ps for gun
2. **1 p.s.** High Voltage Anode Bias ps. Will go in tunnel. Cornell specs ~1kV and 30uA. Purchase Spellman 1kV 10mA, SL1PN10/FGLL/SIC/LR.
3. **1 p.s.** (BC1). I op=4.2A. I max = 6A 1000ppm. Using ERL BiRa 20V, 6A 1000ppmp.s.
4. **6 p.s.'s** (Corr 24H,V, 25H,V, 26H,V), I op=0.6A 100ppm New CAEN EZ Driver 12V 1A 100ppm p.s. bipolar.
5. **10 p.s.'s** (Corr 25Q, SQ & Corr 26Q, SQ & 27H,V-29H,V). New GM Correctors. Use ERL BiRa 20V 2A 1000ppm.
6. **2 p.s.'s** (GIS1-GIS2) using New GM Sol's. I max=8A @ 100ppm. Use ERL SHIM 15v 10A 100ppm (limit 100W) ps's
7. **2 p.s.'s** (GIS3-GIS4) ERL Sol. I max=5A @1000ppm Use ERL SHIM 15V 10A 100ppm (limit 100W) ps's.
8. **1 p.s.** (GIS5) ERL Sol. I op=8.4A, I max=10A @1000ppm Use ERL SHIM 15V 10A 100ppm p.s.
9. **1 p.s.** (ComD1) CeC 45° dipole. I op=20A 1000ppm required. Use New GEN 30-25 1000ppm ps
10. **2 p.s.'s.** (Q5 & Q6) Iop=0.6A & 0.4A. Use 2 ERL 20V 2A 1000ppm BiRa's.
11. **2 p.s's** (Corr 30H,V) Iop = 0.55A. Use 2 ERL 20V 2A 1000ppm BiRa's.

Diagnostic Line

1. **4 p.s.'s** (Corr 35-36). If same as transport correctors use ERL BiRa 20V 2A ps's. (Need V & I)
2. **1 p.s.** (DLS1) using ERL Sol's? Set aside SHIM ps. (Need V & I)
3. **1 p.s.** (20°-5). Use SHIM 15V 10 (100W limit). Need Alexei to confirm max operating current and also confirm ps choice

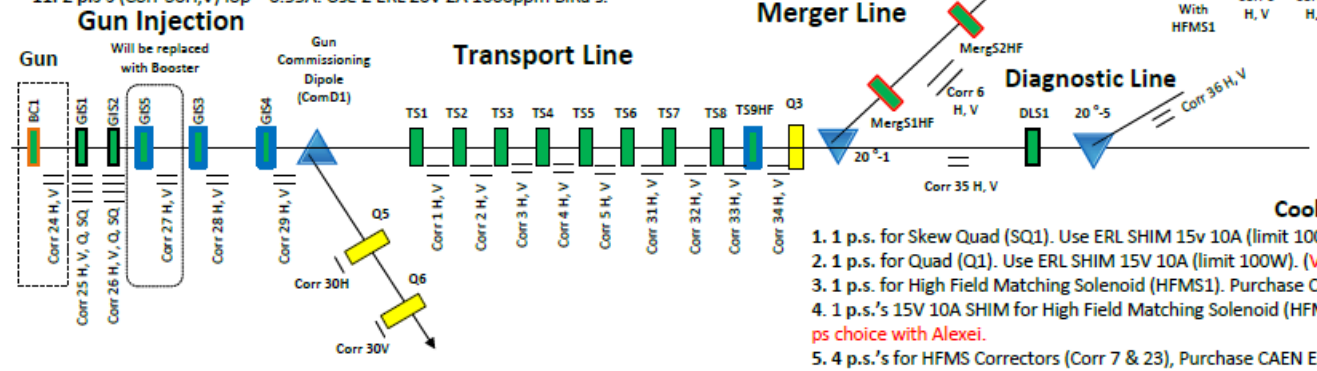

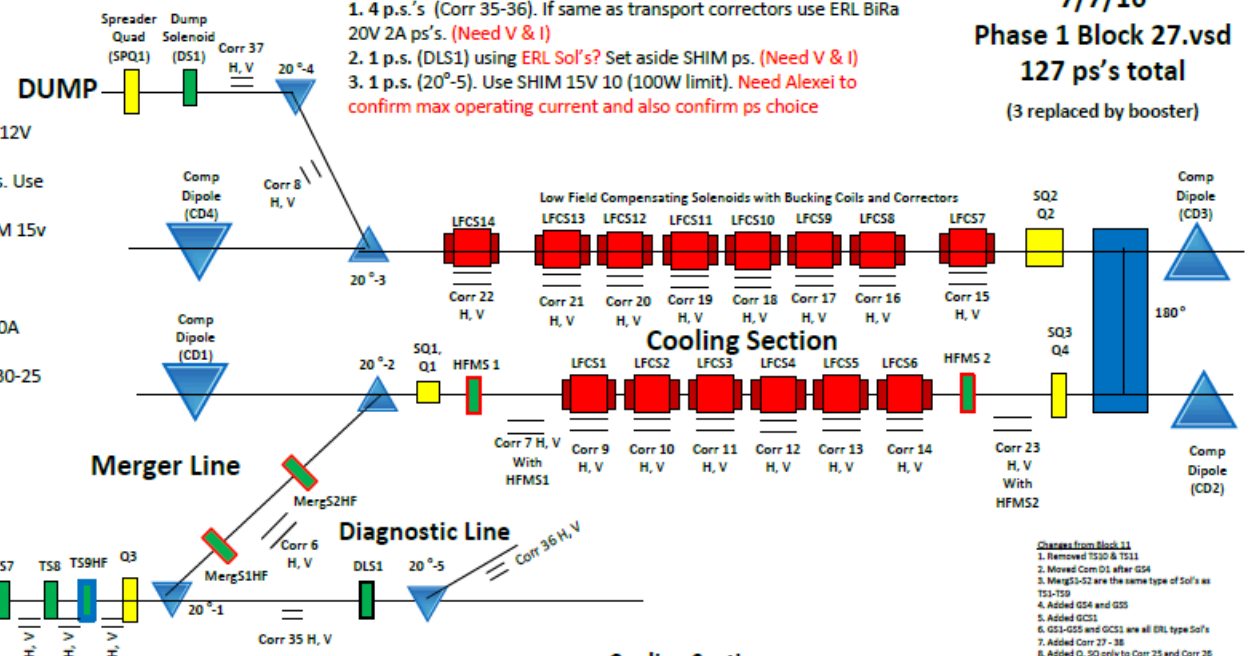

Changes from Block 11
1. Removed TS10 & TS11
2. Moved Com D1 after GS4
3. MergS1-S2 are the same type of Sol's as TS1-TS9
4. Added GS4 and GS5
5. Added GCS1
6. GS1-GS5 and GCS1 are all ERL type Sol's
7. Added Corr 27 - 38
8. Added Q, SQ only to Corr 25 and Corr 26
9. Added BC1
10. TS1-TS9 and MergS1-S2 are new Sol's. Use Karlin's design
11. Include High Voltage Anode Bias ps for gun, need info from Karl Smolenski
12. Include Kaiser HI V p.s. for Gun

Transport Section

1. **8 p.s's** ERL SHIM 15V 10A 100ppm (limit 100W each) for 8 New design Sol magnets (TS1-8) . These magnets are 200G @ 6.2A. Alexei has confirmed operating current.
2. **10 p.s.'s** for 5 New GM Correctors (Corr1-5) magnets. Use ERL 20V 2A 1000ppm.
3. **8 p.s.'s** for 4 New GM Correctors (Corr 31-34) magnets. Purchase new CAEN 12V 1A 100ppm ps's.
4. **1 p.s.** for TS9HF. Use ERL Sol. I op=8.4A, I max=10A @100ppm Use ERL Kepco 50V 20A 100ppm. Alexei has confirmed use of kepco.
5. **1 p.s.** for one ERL Quad, Q3, Use ERL 15V 10A SHIM ps (limit 100W)? Waiting on magnet Specs. See George Mahler.

Merger Section

1. **2 p.s.'s** 100G Solenoid Magnets (MergS1HF & MergS2HF). I op=11.3A Alexei confirmed I can purchase new CAEN FAST-PS 20V 20A 100ppm ps's
2. **2 p.s.'s** needed for one Corrector magnet (Corr 6). Use new GM corr, Alexei confirmed we could purchase the CAEN 12v 1A 100ppm p.s.'s
3. **2 p.s.'s**, 20°-1 on its own p.s. and 20°-2 on its own p.s. Use 2 SHIM ps's for now. We must measure voltage ripple of SHIMs. If the ripple on SHIMs is as good as kepcos we can use them. If not we will use 2 kepcos here. For now use SHIM's. Alexei said 100ppm@10A preferred over 100ppm@20A. Ask Alexei to confirm operating current 2A to 4A

Cooling Section

1. **1 p.s.** for Skew Quad (SQ1). Use ERL SHIM 15v 10A (limit 100W). (V&I needed)
2. **1 p.s.** for Quad (Q1). Use ERL SHIM 15V 10A (limit 100W). (V&I needed)
3. **1 p.s.** for High Field Matching Solenoid (HFMS1). Purchase CAEN FAST PS 20V 20A p.s..
4. **1 p.s.'s** 15V 10A SHIM for High Field Matching Solenoid (HFMS2). Cannot use GEN 30-25, moved GEN 30-25 to ComD1. Review this ps choice with Alexei.
5. **4 p.s.'s** for HFMS Correctors (Corr 7 & 23), Purchase CAEN EZ 12V 1A. (V&I needed)
6. **1 p.s.** 150V 22A for LFCSc1-6 cores 6 in series. Received. Alexei confirmed we can still use.
7. **1 p.s.** 150V 22A for LFCSbc1-6 buck coils (2x) 6 in series. Received. Alexei confirmed we can still use.
8. **28p.s.'s** Purchase 12V 1A CAEN Easy Diver for Correctors (Corr 9-22) with LFCS magnets.
9. **1 p.s.** for SQ3. Use ERL SHIM 15v 10A (limit 100W). (V&I needed)
10. **1 p.s.** for Q4. Use ERL SHIM 15v 10A (limit 100W). (V&I needed)
11. **1 p.s.** for 180° magnet. Have LSII p.s. in house. Assembling it. Add FWD to COTS ps?
12. **1 p.s.** for SQ2 Use ERL SHIM 15v 10A (limit 100W)
13. **1 p.s.** for Q2 Use ERL SHIM 15v 10A (limit 100W)
14. **1 p.s.** for Compensating Dipoles (CD1-4). All 4 in series. Use ERL Kepco 50V 20A 100ppm. Review ps choice with Alexei
15. **1 p.s.** 30V 25A for LFCSc7 core single. Purchased new GEN 30-25, Alexei confirm p.s. still ok at low currents
16. **1 p.s.** 30V 25A for LFCSbc7 buck coils 2 in series from one magnet. Purchased new GEN 30-25, Alexei confirm p.s. still ok at low currents
17. **1 p.s.** 150V 22A for LFCSc8-13 cores 7 in series. Received. Alexei confirmed we can still use.
18. **1 p.s.** 150V 22A for LFCSbc8-13 buck coils (2x) 7 in series. Received. Alexei confirmed we can still use.
19. **1 p.s.** 30V 25A for LFCSc14 core single. Received. Alexei confirm p.s. still ok at low currents
20. **1 p.s.** 30V 25A for LFCSbc14 buck coils 2 in series from one magnet. Received. Alexei confirm p.s. still ok at low currents

Dump

1. **1 p.s.** needed for one Spreader Quad Magnet (SPQ1), Alexei said to use ERL 15V 10A SHIM p.s. (V&I needed)
2. **1 p.s.** for Dump Solenoid (DS1). Use ERL Solenoid. Set aside SHIM 15V 10A 100ppm (100W limit) p.s (V&I needed)
3. **1 p.s.** Dump Section has 20°-3. Use SHIM 15V 10A 100ppm (100W limit) p.s. Alexei I op and PS OK
4. **1 p.s.** Dump Section has 20°-4 . Use SHIM 15V 10A 100ppm (100W limit) p.s. Alexei I op and PS OK
5. **2 ps's** for Corr 8. If same as transport correctors use 2 Bira 20V 2A ps's from ERL. (V&I needed)
6. **2 p.s.'s** for Corr 37. If same as transport correctors use 2 Bira 20V 2A ps's from ERL. (V&I needed)

P&ID SRF Booster Cryogenics

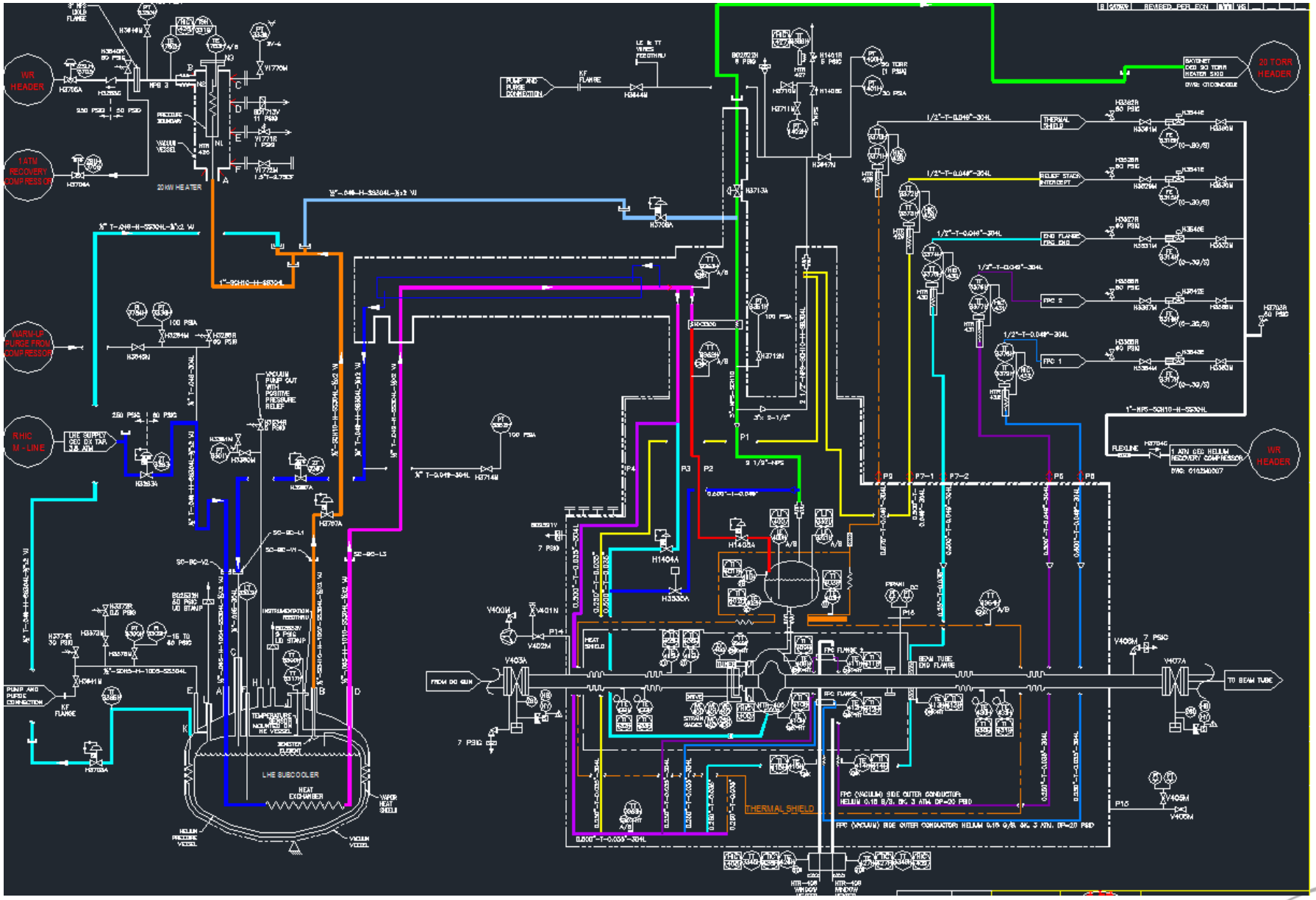

BROOKHAVEN NATIONAL LABORATORY

704MHz Booster SRF Cryostat

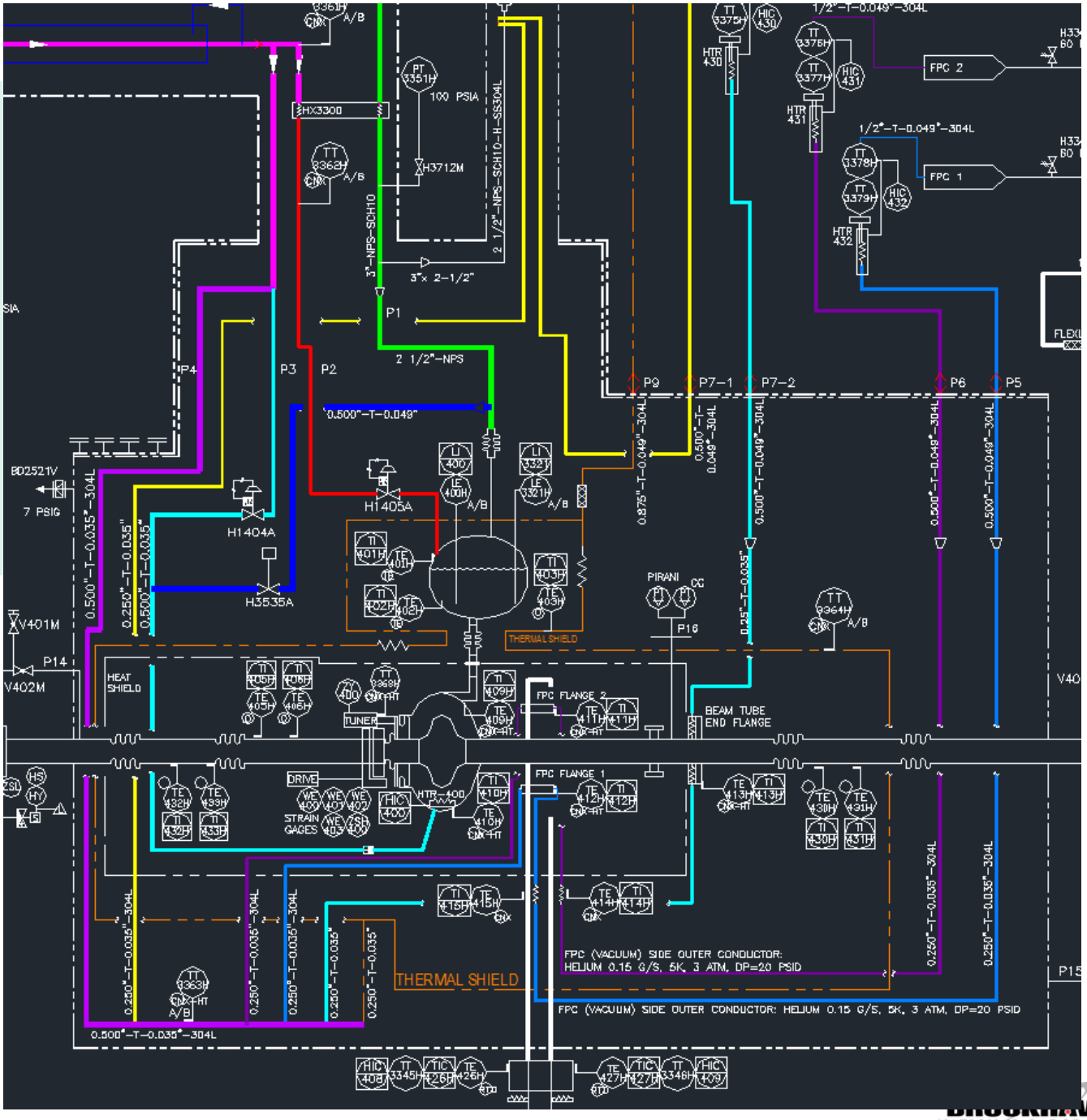

BROOKHAVEN NATIONAL LABORATORY

LEREC CRYOGENIC SYSTEMS

- 704MHz Booster SRF Cryostat:

  LESHC 16-04 ERL SRF eGun / LEReC SRF Booster Conversion Modifications.
  G. McIntyre/ C. Pai

  ASME VIII Div 2 analysis was done for the annex added to cooling to the choke joint

  - **Criteria 1. Protection against plastic collapse**
  - **Criteria 2. Protection against local failure.**
  - **Criteria 3. Protection against collapse from buckling. (under vacuum load)**
  - **Criteria 4. Protection against failure from cyclic loading**

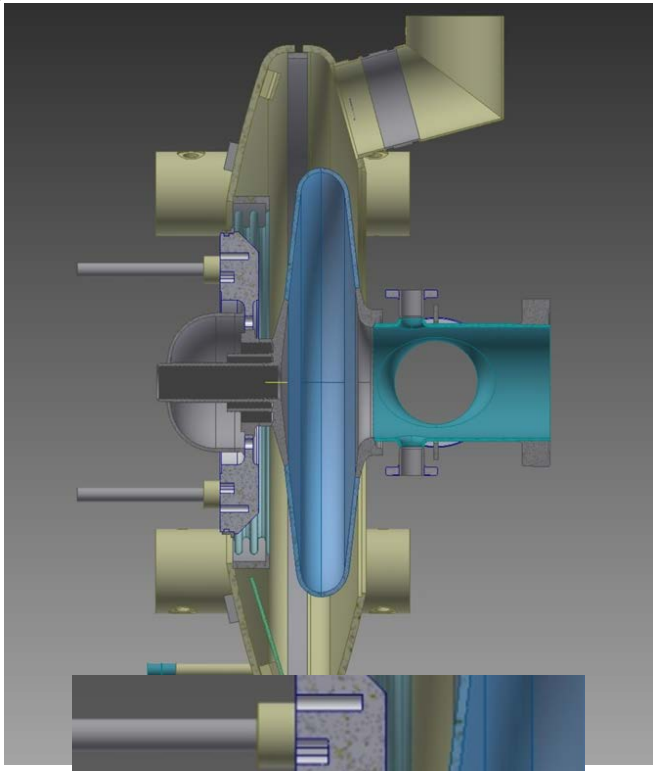

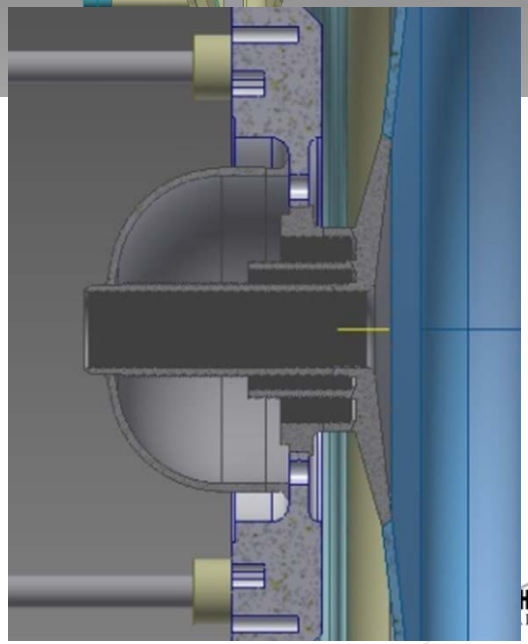

LEREC CRYOGENIC SYSTEMS

MPS

- 704MHz Booster SRF Cryostat MPS CRYO INTERLOCKS:

  Cavity bath pressure
  Liquid helium level
  Cavity bath Temperature
  5K circuits FPC's flanges temperature
  Upstream choke area pipe Temperature
  Downstream beamline flange Temperature

ODH

- Subcooler: 80 liters + SRF Cryostat: 170 Liters = 250 Liters
- All reliefs relief into IP2 Hall
- to be added VODH vacuum switch 704MHz Booster SRF Cryostat ODH INTERLOCK : close supply control valve at DX tap.
- to be added VODH vacuum switch Subcooler INTERLOCK: close supply control valve at DX tap.

BROOKHAVEN NATIONAL LABORATORY

CRYOGENIC SYSTEMS

- Cryogenic Distribution System

  LESHC PCSS REVIEW TBD

  New Cryogenic Supply line system: Engineered and fabricated in accordance with ASME B31.3

  - Tee of existing DX tap 4 bar. 4.5K RHIC supply
  - LHe supply line to subcooler
  - LHe supply line to SRF Booster cavity 2K/4K heatexchanger
  - Subcooler Shield return to 1atm heater
  - 4.5K SRF cavity boil-off return line with control valve
  - 20 Torr Vapor Cryogenic Return line system.
    - 2K/4K Recovery heat exchanger
    - Control valve 3 inch process line
    - return goes to exiting CeC 20Torr Return Heater

  Existing Subcooler from ERL, ASME VIII Div 1, U stamped

  New 20 kW, 1 atm return heater

  New 5 x 1.5 kW heaters for 5K intercepts' return flows

  FPC's window and flange heaters

  New: Warm Piping

LEREC CRYOGENIC SYSTEMS

- Cryogenic Distribution System: Instrumentation & Controls, & Electric Power

  New 480VAC 20 kW, 1 atm return heater

  - Heater Control Cabinet is UL /NRTL listed

  New 5 x 1.5 kW, 480VAC heaters for 5K intercept returns flow

  - Heater Control Cabinet is UL /NRTL listed

  FPC's window and flange heaters, 120VAC

  SRF cavity bath heater: 50W, 24V

- Utilities

  480VAC power for heaters

  120VAC power for controls

  DI water for SRF Cavity's FPC windows/ inner conductor

  Instrument air

BROOKHAVEN NATIONAL LABORATORY

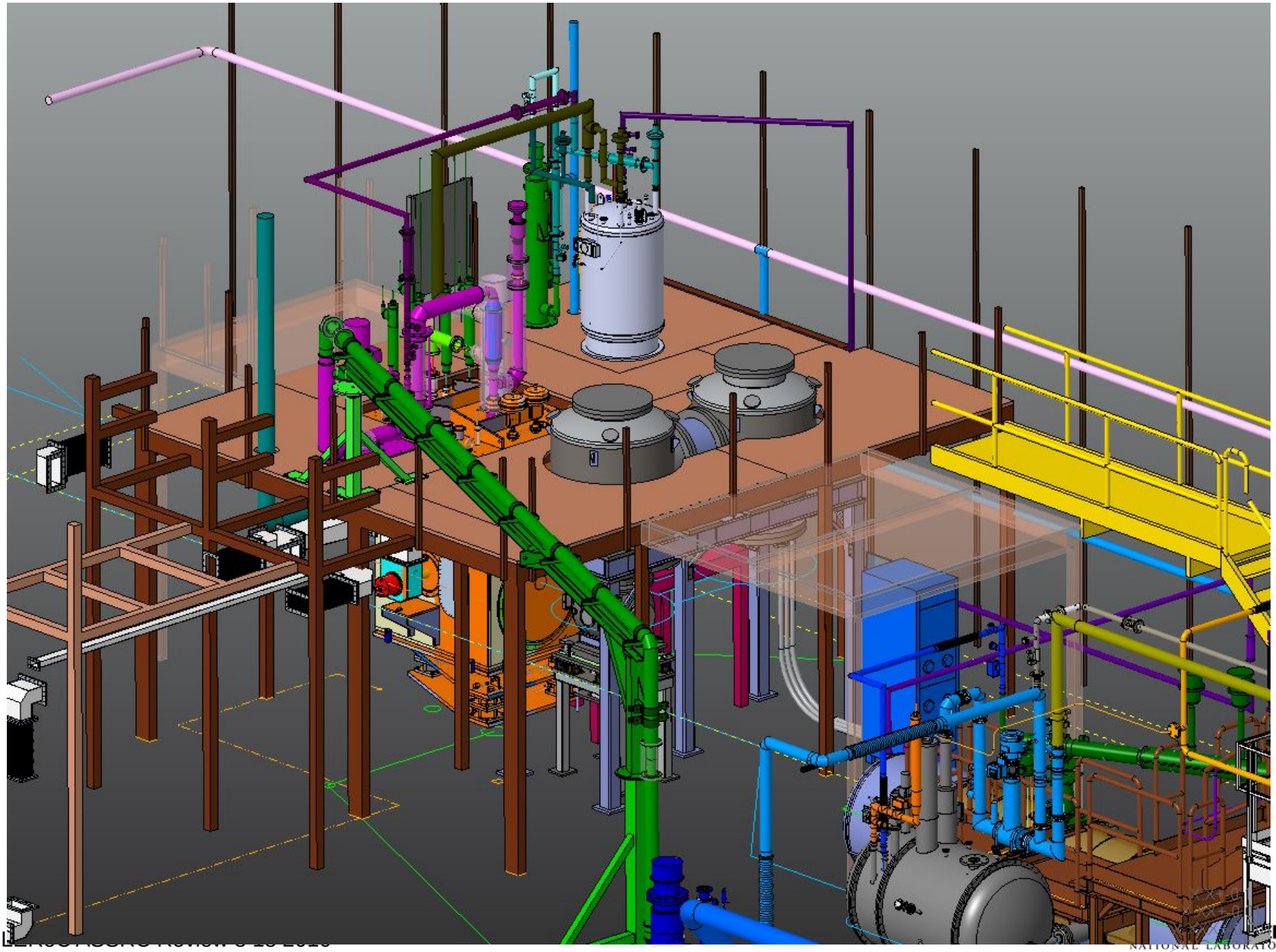

Summary

- Atypical Accelerator Stuff: DC Gun
- Newly Typical Accelerator Stuff: SCRF cavity, Laser systems, electron beam dumps
- Typical Accelerator Stuff: many motorized drives for diagnostics & RF cavity tuning, magnets, HV pumps & gauges, HV radiation monitors, High Power RF cavities – x-ray sources.
- Experienced team
- Multiple specific system reviews: RSC, PCSS, Laser, IRR and ARR, ASSRC and ASSRC walkthrough