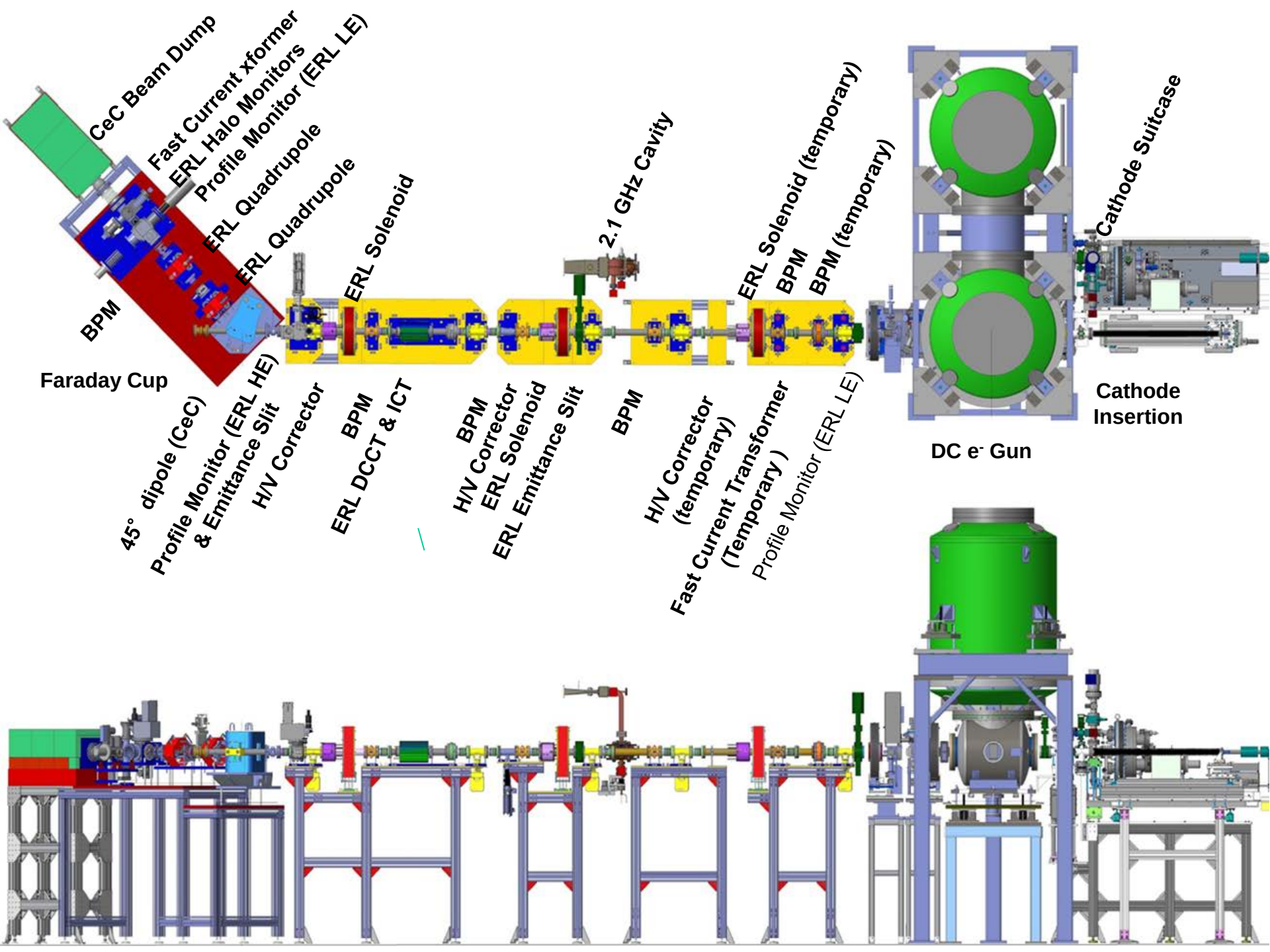
CeC Beam Dump
Fast Current xformer
ERL Halo Monitors
Profile Monitor (ERL LE)
ERL Quadrupole
ERL Quadrupole
BPM
Faraday Cup
ERL Solenoid
2.1 GHz Cavity
ERL Solenoid (temporary)
BPM
BPM (temporary)
Cathode Suitcase
Cathode Insertion
DC e- Gun
45° dipole (CeC)
Profile Monitor (ERL HE) & Emittance Slit
H/V Corrector
BPM
ERL DCCT & ICT
BPM
H/V Corrector
ERL Solenoid
ERL Emittance Slit
BPM
H/V Corrector (temporary)
Fast Current Transformer (Temporary)
Profile Monitor (ERL LE)

Tunnel Installations Critical Jobs

LEReC (commissioning 2017 and 2018, operations 2019 and 2020)

- Install cathode system and remove cathode from gun
- Install Gun to Booster beam line with laser alignment
- Install laser systems
- Install DC gun test beam transport line to dump
- Install 2.1 GHz RF cavity system
- Install 704 MHz RF cavity system (late delivery – maintenance day)

CeC (commissioning 2017, experiment 2018, operations eRHIC)

- Prepare and install 5 cell SRF cavity – 1/20/17
- Install ICT
- Install laser system
- Install and align cathode insertion system
- Retrofit profile monitors **(Installing/prepping clean rooms)**
- Install aluminum beam dump **(Need sub assembly leak check)**

DC Gun Preparations

DC Gun conditioning complete: 10 days 450kV stable operation

- **Leak check – tightened flange, conditioned NEGS**
- **Remove SF6, cart, and tanks to clear *cold* area,** recharge January 23.
- **Relief valve, pressure/vacuum gauge, low pressure switch - ordered**
- Replace processing/conditioning resistor w/600 Ohm assembly.
- **Move instrumentation rack, fix fan trip problem**
- **Revised cable tray path, move water & power lines off floor**
- **Remove He conditioning system**
- **Inverter rack moved out (temporarily)**
- **Design, test, and install capacitive pickup**

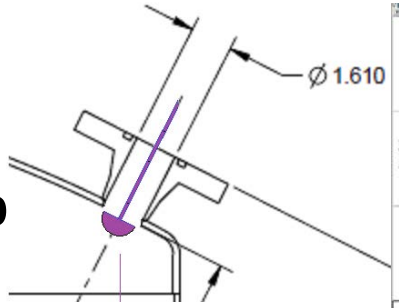

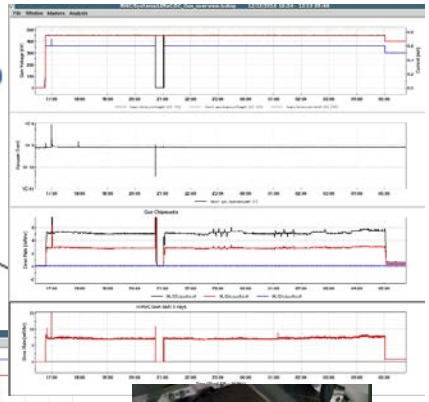

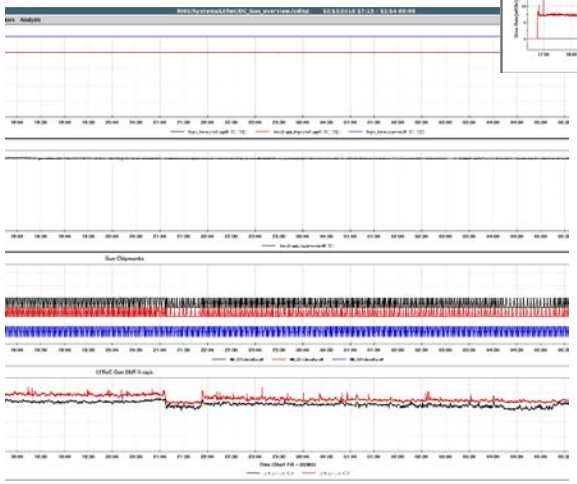

Area Construction

- **Tunnel clean-up/Floor painted:** keep area clean - remove extraneous stuff
- Work platform assembly: floor plates in shops,
- **Cathode installation – clean conditions for this weekend**.
- **Portable filters delivered, installed**
- Cables pulling continues.
- Cable tray 1002B to 1002F (laser) underway
- **Cable tray reroute for DC Gun Power supply**
- **CeC beam dump moved**, survey, connect, instrument, shielding
- **RF transformers and barriers installed**
- **Outdoor laser transport pipe supported**
- **Laser building AC unit re-installed and running**

Cathode Systems

- **Clean room installed: filters and lights operational**
- **Stands in tunnel, surveyed and installed**
- **DC Gun cathode inserter – cleanroom assembly, survey under vacuum, parts fit, internal gripper assembly.**
- Assemble cathode inserter system in tunnel, bakeout
- Remove polished cathode from DC gun
- Assemble single cathode transport #1, bakeout, remove DC gun cathode puck
- Assemble single cathode transport #2, bakeout, pick-up 1st DC gun cathode puck
- 1 repolished cathode in hand, 10 to be delivered next week

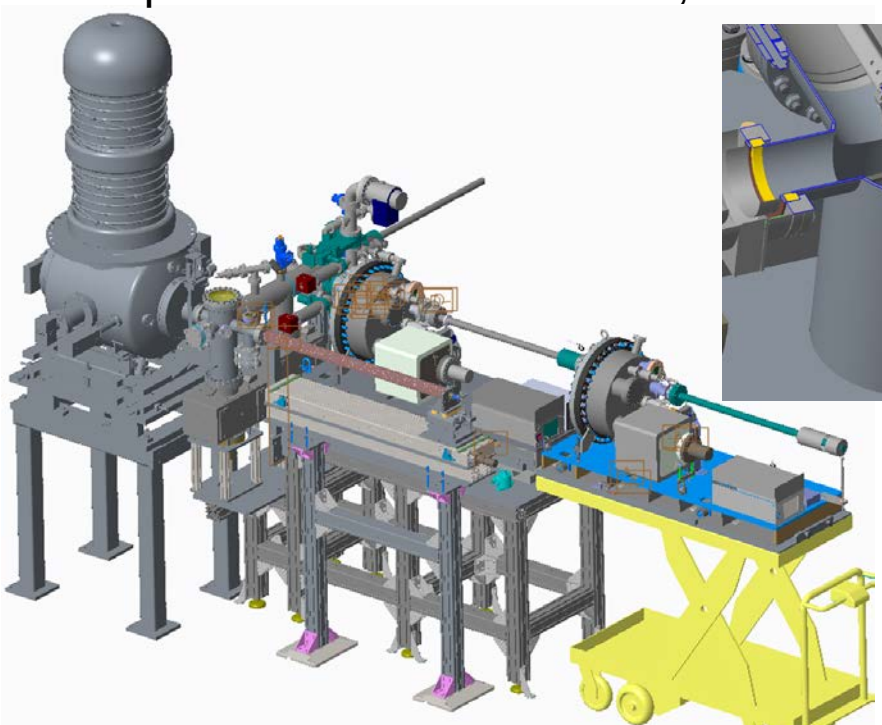

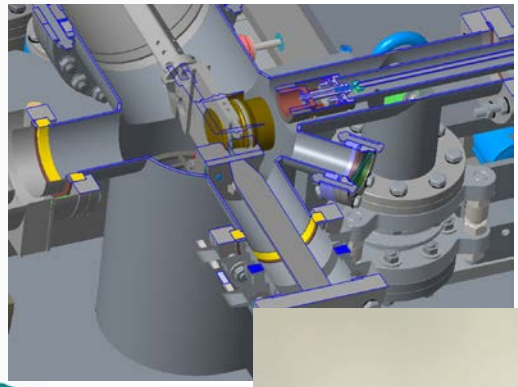

Cathode Systems

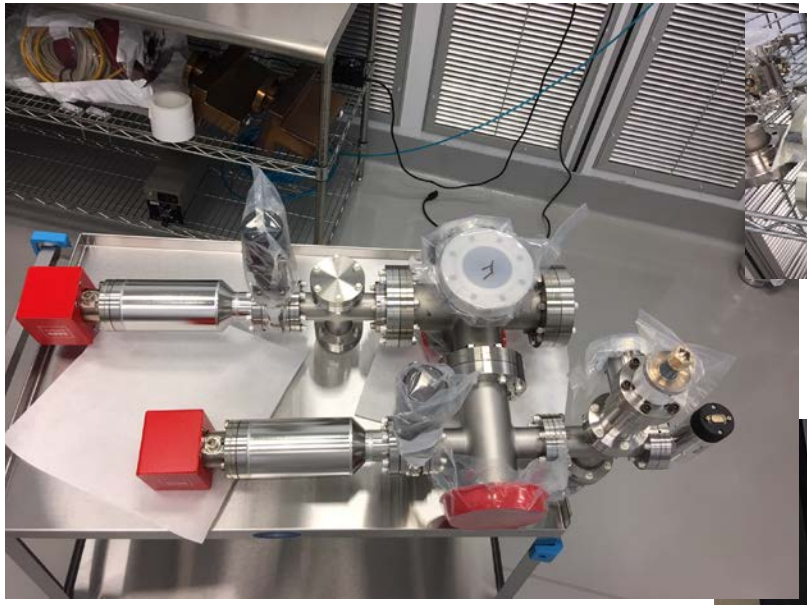

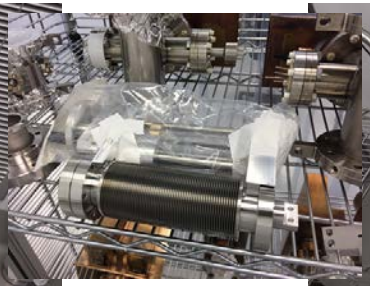

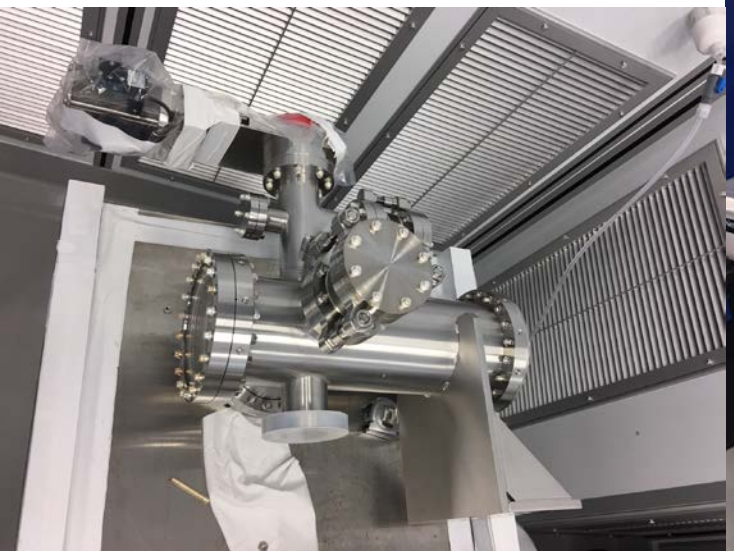

Laser Systems

- **Laser systems install at 1002F underway**
- **Gun table assembly – second grouting completed**
- **Cross tunnel vacuum line installed, interference fixed.**
- Relay table assembly
- Gun table assembly

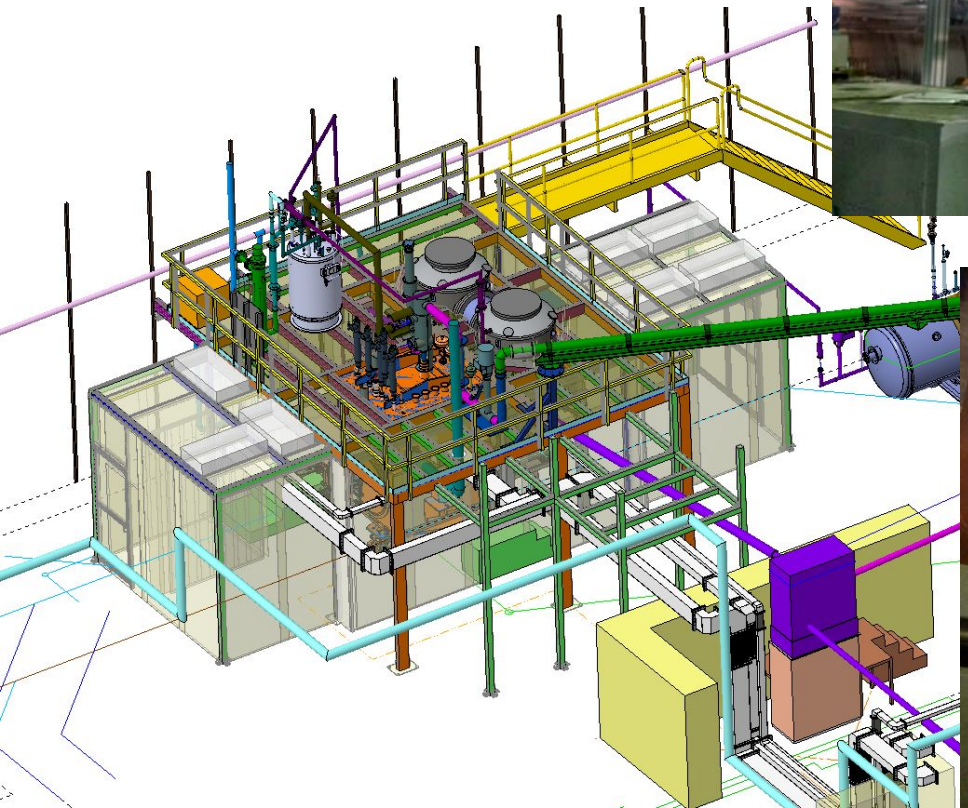

Gun to Booster Cavity Beam Line

- **Solenoids & correctors measured magnets in 919B**
- **Solenoid positioning drives assembled and tested, limit switch plan.**
- **Solenoid/quad corrector fit problem remediation plan**
- **Stands complete, vacuum chambers being baked** and prepped?
- **BPM buttons in hand and prepped**
- **Laser mirrors delivered, bake out test results?**
- **Profile monitor parts in hand, being prepped**
- **Stands in tunnel, survey, redhead,** move to 919B for beamline assembly.

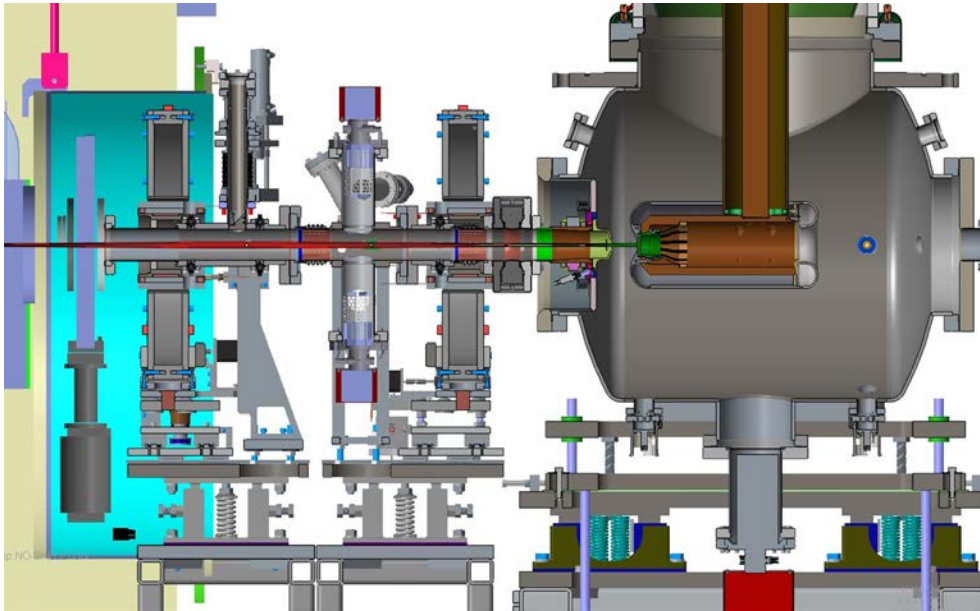

Gun to Booster Q and SQ correctors

- GIS1 Quad and Skew Quad correctors removed because of space limitations. May be replaced with hand wound correctors similar to Cornell.
- GIS2 Quad and Skew Quad correctors moved downstream for this year near GIS5.
- Plan is to redesign all four correctors in the GIS1 and GIS2 corrector assemblies so they fit properly and install new assemblies next summer

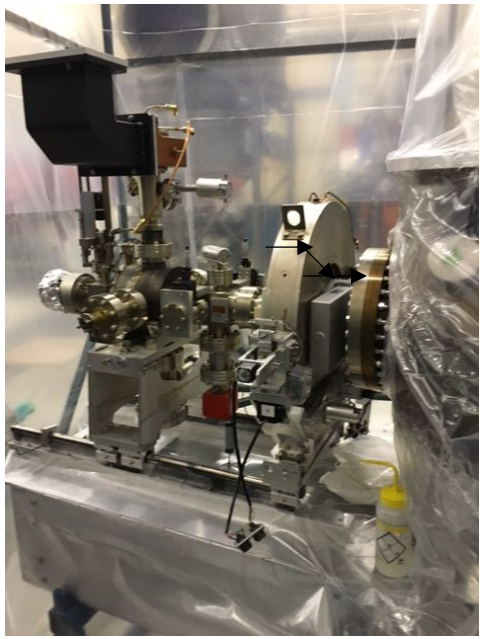

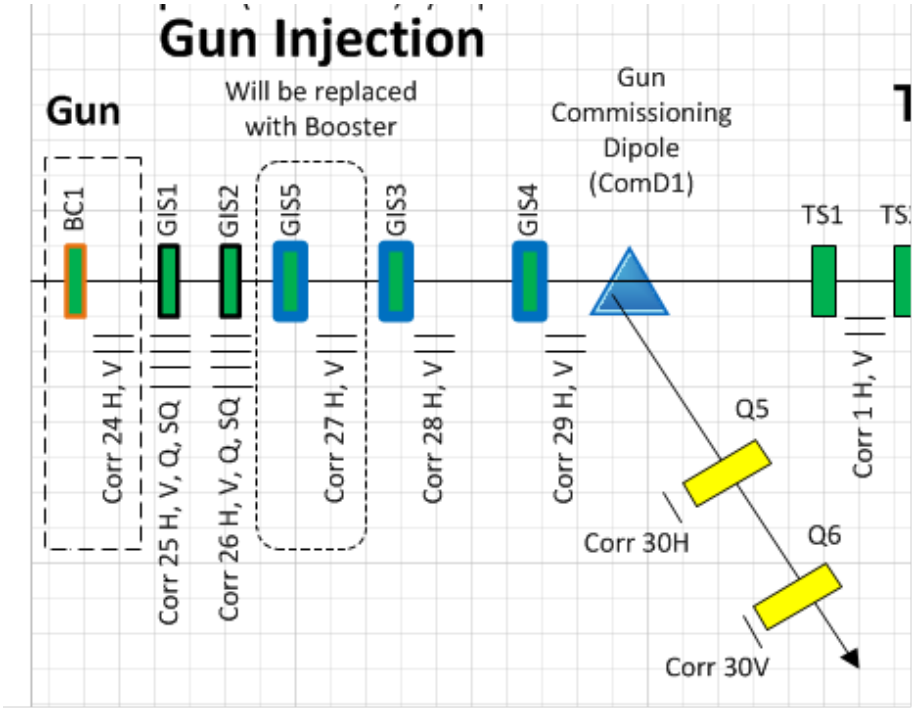

Relocation of Quad

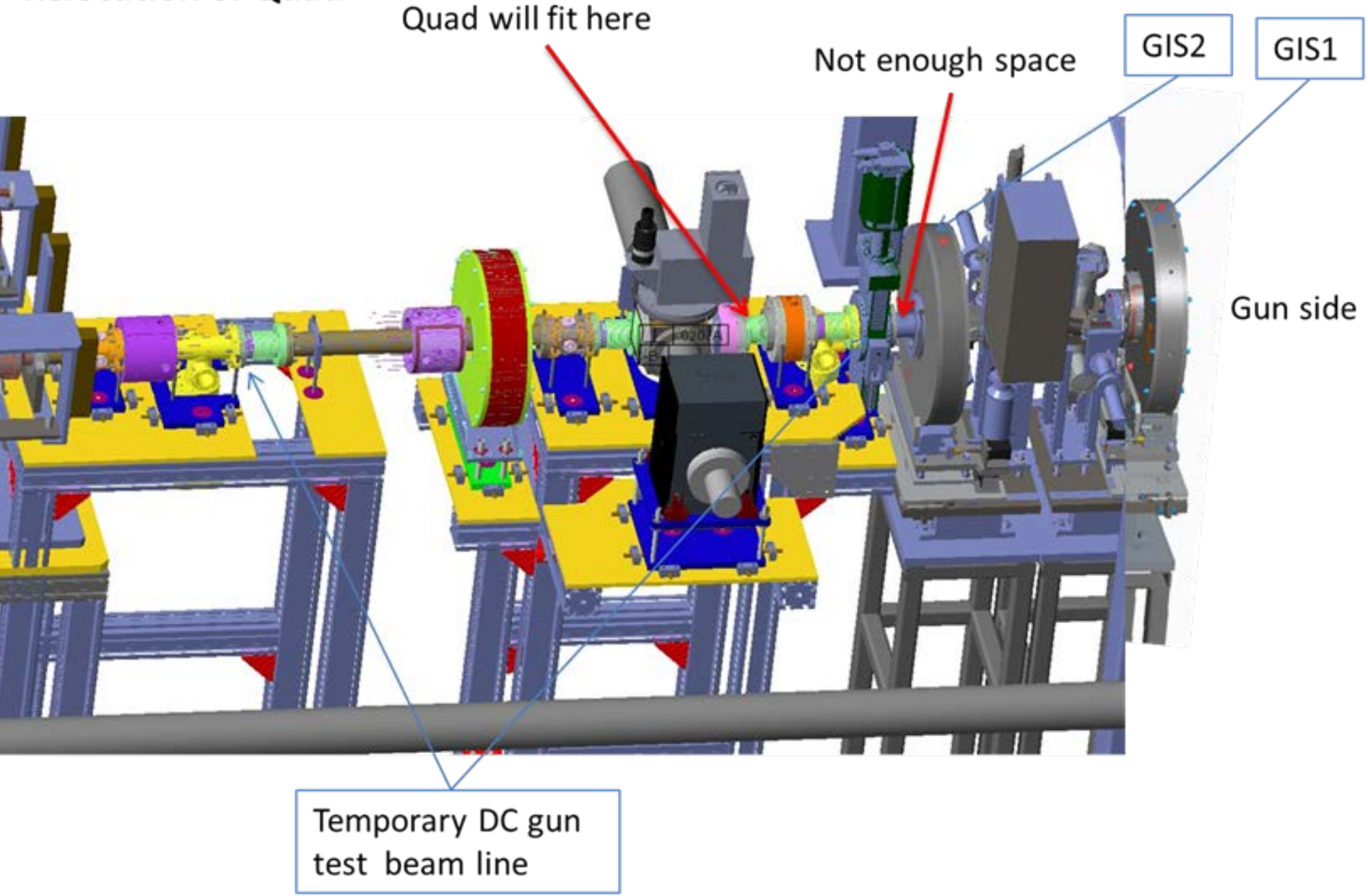

DC Gun Test Transport Line

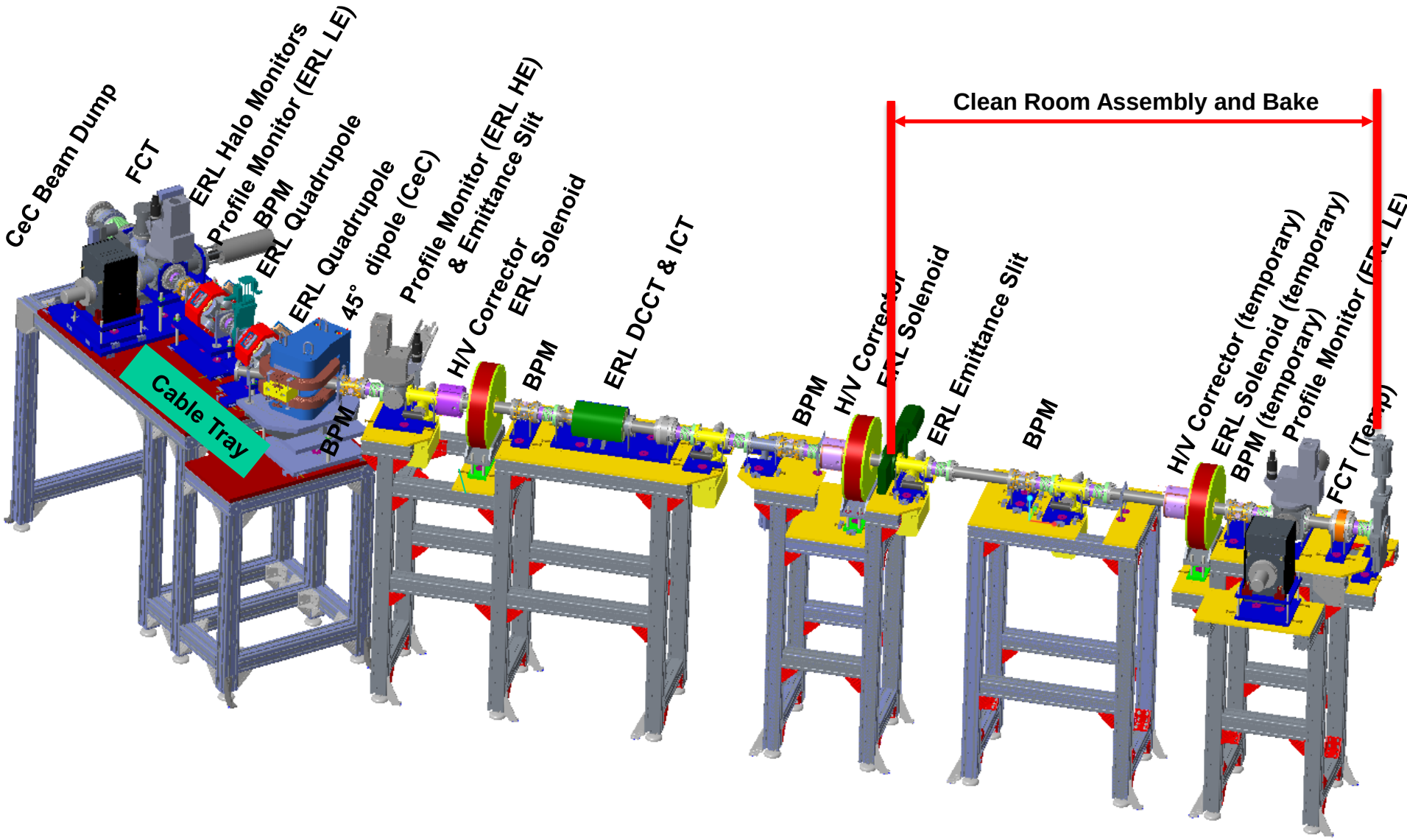

Transport Line Sector 1

- Vacuum equipment in hand: bellows, ion pump tees, ion pumps and gauges, controllers – awaiting cable tray.
- **Fast Current Transformer, in calibration,** clean room prep.
- **Profile monitor 1 complete** – clean room prep.
- Profile monitor 2 status, need ferrites, final assembly without ferrite?
- **BPM's complete** – clean room prep.
- **Solenoid magnets installed,** surveyed, terminated
- H&V correctors measured
- Emittance slit assembly, status?
- ICT and DCCT ready for installation.

Transport Line LE Beam Dump Sector

- **45 magnet-halo monitor stand in tunnel, surveyed, redheaded.**
- **Cable tray on stand, cable terminations start**
- **Beam dump moved, surveyed,** instrumented, shielding.
- **BPM's complete, installed, survey**
- **Profile Monitor & Halo Monitor installed, surveyed**
- **Ceramic break & bellows ready for installation**
- **Fast Current Transformer, in calibration, ready for installation?**
- H&V correctors, magnetic measurement complete

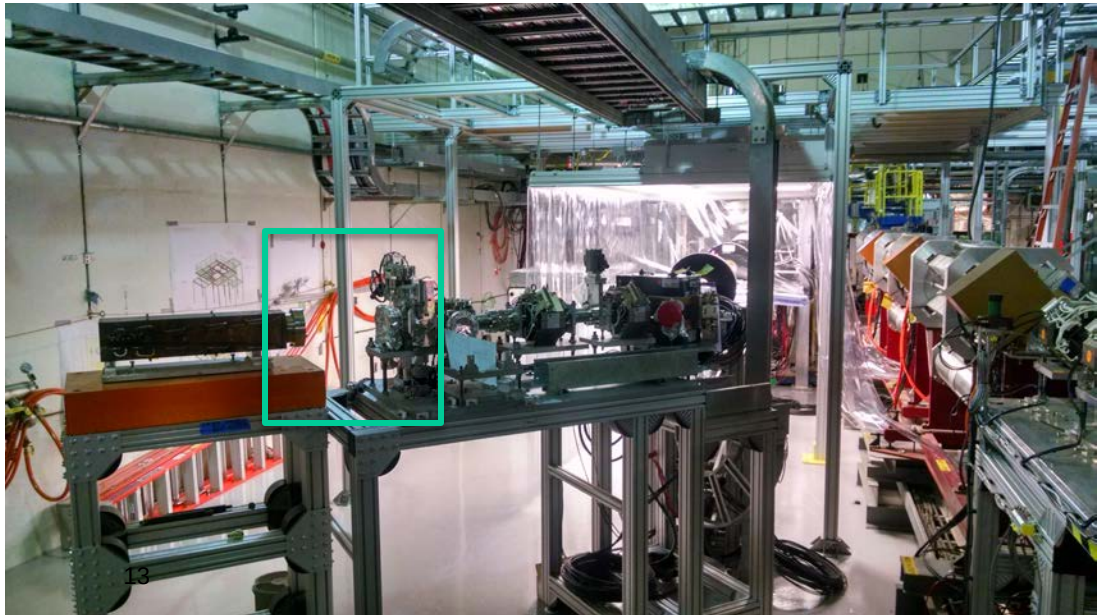

RF Cavities

- **2.1 GHz PA delivered, powered,** installed, tested (vendor next week)
- **Transformers installed**, powered.
- 2.1 GHz cavity assembled
- Waveguide and coax being installed
- 704 MHz delivery January

12/29/16
Phase 1 Block 29.vsd
147 ps's total
(3 replaced by booster)

Gun Injection Section

1. 1 p.s. Kaiser High Voltage ps for gun
2. 1 p.s. High Voltage Anode Bias ps. Will go in tunnel. Cornell specs ~1kV and 30uA. Purchase Spellman 1kV 10mA, SL1PN10/FGLL/SIC/LR.
3. 1 p.s. (BC1). I op=4.2A. I max = 6A 1000ppm. Using ERL BiRa 20V, 6A 1000ppmp.s.
4. 6 p.s.'s (Corr 24H,V, 25H,V, 26H,V), I op=0.6A 100ppm New CAEN EZ Driver 12V 1A 100ppm p.s. bipolar.
5. 10 p.s.'s (Corr 25Q, SQ & Corr 26Q, SQ & 27H,V-29H,V). New GM Correctors. Use ERL BiRa 20V 2A 1000ppm.
6. 2 p.s.'s (GIS1-GIS2) using New GM Sol's. I max=8A @ 100ppm. Use ERL SHIM 15v 10A 100ppm (limit 100W) ps's
7. 2 p.s.'s (GIS3-GIS4) ERL Sol. I max=5A @1000ppm Use ERL SHIM 15V 10A 100ppm (limit 100W) ps's.
8. 1 p.s. (GIS5) ERL Sol. I op=8.4A, I max=10A @1000ppm Use ERL SHIM 15V 10A 100ppm p.s.
9. 1 p.s. (ComD1) CeC 45° dipole. I op=20A 1000ppm required. Use New GEN 30-25 1000ppm ps
10. 2 p.s.'s. (Q5 & Q6) Iop=0.6A & 0.4A. Use 2 ERL 20V 2A 1000ppm BiRa's.
11. 2 p.s's (Corr 30H,V) Iop = 0.55A. Use 2 ERL 20V 2A 1000ppm BiRa's.

Diagnostic Line

1. 4 p.s.'s (Corr 35-36). If same as transport correctors use ERL BiRa 20V 2A ps's. (Need V & I)
2. 1 p.s. (DLS1) using ERL Sol's? Set aside SHIM ps. (Need V & I)
3. 1 p.s. (20°-5). Use SHIM 15V 10 (100W limit). Need Alexei to confirm max operating current and also confirm ps choice

Yellow means not sure, don't pull these dc cables

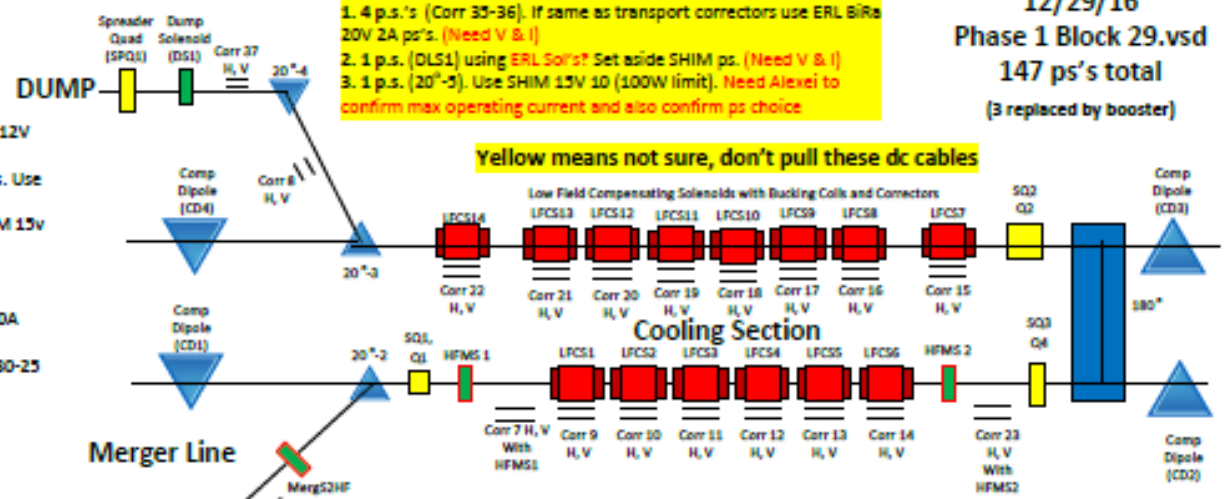

Changes from Block 28
1. LFCSc8-13 are no longer in series
2. LFCSbc8-13 6 are no longer in series
3. We now have 4 spare 150V 22A ps's

Transport Section

1. 8 p.s's ERL SHIM 15V 10A 100ppm (limit 100W each) for 8 New design Sol magnets (TS1-8) . These magnets are 200G @ 6.2A. Alexei has confirmed operating current.
2. 10 p.s.'s for 5 New GM Correctors (Corr1-5) magnets. Use ERL 20V 2A 1000ppm.
3. 8 p.s.'s for 4 New GM Correctors (Corr 31-34) magnets. Purchase new CAEN 12V 1A 100ppm ps's.
4. 1 p.s. for TS9HF. Use ERL Sol. I op=8.4A, I max=10A @100ppm Use ERL Kepco 50V 20A 100ppm. Alexei has confirmed use of kepco.
5. 1 p.s. for one ERL Quad, Q3, Use ERL 15V 10A SHIM ps (limit 100W)? Waiting on magnet Specs. See George Mahler.

Merger Section

1. 2 p.s.'s 100G Solenoid Magnets (MergS1HF & MergS2HF). I op=11.3A Alexei confirmed I can purchase new CAEN FAST-PS 20V 20A 100ppm ps's
2. 2 p.s.'s needed for one Corrector magnet (Corr 6). Use new GM corr, Alexei confirmed we could purchase the CAEN 12v 1A 100ppm p.s.'s
3. 2 p.s.'s, 20°-1 on its own p.s. and 20°-2 on its own p.s. Use 2 SHIM ps's for now. We measured voltage ripple of SHIMs. They were low enough so we got confirmation to use them from Alexei.

Cooling Section

1. 1 p.s. for Skew Quad (SQ1). Use ERL SHIM 15v 10A (limit 100W). (V&I needed)
2. 1 p.s. for Quad (Q1). Use ERL SHIM 15V 10A (limit 100W). (V&I needed)
3. 1 p.s. for High Field Matching Solenoid (HFMS1). Purchase CAEN FAST PS 20V 20A p.s..
4. 1 p.s.'s 15V 10A SHIM for High Field Matching Solenoid (HFMS2). Cannot use GEN 30-25, moved GEN 30-25 to ComD1. Review this ps choice with Alexei.
5. 4 p.s.'s for HFMS Correctors (Corr 7 & 23). Purchase CAEN EZ 12V 1A. (V&I needed)
6. 6 p.s.'s 60V 12.5A for LFCSc1-6 cores. All Cores independent. See Alexei e-mail 9/29/16 confirming unipolar.
7. 6 p.s.'s 60V 12.5A for LFCSbc1-6 buck coils (2x). Each Magnet has 2 coils in series to one ps.See Alexei e-mail 9/29/16.
8. 28p.s.'s Purchase 12V 1A CAEN Easy Diver for Correctors (Corr 9-22) with LFCS magnets.
9. 1 p.s. for SQ3. Use ERL SHIM 15v 10A (limit 100W). (V&I needed)
10. 1 p.s. for Q4. Use ERL SHIM 15v 10A (limit 100W). (V&I needed)
11. 1 p.s. for 180° magnet. Have LSII p.s. in house. Assembling it. Add FWD to COTS ps?
12. 1 p.s. for SQ2 Use ERL SHIM 15v 10A (limit 100W)
13. 1 p.s. for Q2 Use ERL SHIM 15v 10A (limit 100W)
14. 1 p.s. for Compensating Dipoles (CD1-4). All 4 in series. Use ERL Kepco 50V 20A 100ppm. Review ps choice with Alexei
15. 1 p.s. 30V 25A for LFCSc7 core single. Purchased new GEN 30-25, Alexei confirm p.s. still ok at low currents
16. 1 p.s. 30V 25A for LFCSbc7 buck coils 2 in series from one magnet. Purchased new GEN 30-25, Alexei confirm p.s. still ok at low currents
17. 6 p.s.'s 60V 12.5A for LFCSc8-13 cores. All Cores independent. See Alexei e-mail 9/29/16 confirming unipolar.
18. 6 p.s.'s 60V 12.5A for LFCSbc8-13 buck coils (2x). Each Magnet has 2 coils in series to one ps.See Alexei e-mail 9/29/16.
19. 1 p.s. 30V 25A for LFCSc14 core single. Received. Alexei confirm p.s. still ok at low currents
20. 1 p.s. 30V 25A for LFCSbc14 buck coils 2 in series from one magnet. Received. Alexei confirm p.s. still ok at low currents

Dump

1. 1 p.s. needed for one Spreader Quad Magnet (SPQ1), Alexei said to use ERL 15V 10A SHIM p.s. (V&I needed)
2. 1 p.s. for Dump Solenoid (DS1). Use ERL Solenoid. Set aside SHIM 15V 10A 100ppm (100W limit) p.s (V&I needed)
3. 1 p.s. Dump Section has 20°-3. Use SHIM 15V 10A 100ppm (100W limit) p.s. Alexei I op and PS OK
4. 1 p.s. Dump Section has 20°-4 . Use SHIM 15V 10A 100ppm (100W limit) p.s. Alexei I op and PS OK
5. 2 ps's for Corr 8. If same as transport correctors use 2 Bira 20V 2A ps's from ERL. (V&I needed)
6. 2 p.s.'s for Corr 37. If same as transport correctors use 2 Bira 20V 2A ps's from ERL. (V&I needed)

Gun Injection Section

1. 1 p.s. Kaiser High Voltage ps for gun
2. 1 p.s. High Voltage Anode Bias ps. Will go in tunnel. Cornell specs ~1kV and 30uA. Purchase Spellman 1kV 10mA, SL1PN10/FGLL/SIC/LR.
3. 1 p.s. (BC1). I op=4.2A. I max = 6A 1000ppm. Using ERL BiRa 20V, 6A 1000ppm p.s.
4. 6 p.s.'s (Corr 24H,V, 25H,V, 26H,V), I op=0.6A 100ppm New CAEN EZ Driver 12V 1A 100ppm p.s. bipolar.
5. 10 p.s.'s (Corr 25Q, SQ & Corr 26Q, SQ & 27H,V-29H,V). New GM Correctors. Use ERL BiRa 20V 2A 1000ppm.
6. 2 p.s.'s (GIS1-GIS2) using New GM Sol's. I max=8A @ 100ppm. Use ERL SHIM 15v 10A 100ppm (limit 100W) ps's
7. 2 p.s.'s (GIS3-GIS4) ERL Sol. I max=5A @1000ppm Use ERL SHIM 15V 10A 100ppm (limit 100W) ps's.
8. 1 p.s. (GIS5) ERL Sol. I op=8.4A, I max=10A @1000ppm Use ERL SHIM 15V 10A 100ppm p.s.
9. 1 p.s. (ComD1) CeC 45° dipole. I op=20A 1000ppm required. Use New GEN 30-25 1000ppm ps
10. 2 p.s.'s. (Q5 & Q6) Iop=0.6A & 0.4A. Use 2 ERL 20V 2A 1000ppm BiRa's.
11. 2 p.s's (Corr 30H,V) Iop = 0.55A. Use 2 ERL 20V 2A 1000ppm BiRa's.

Gun Injection

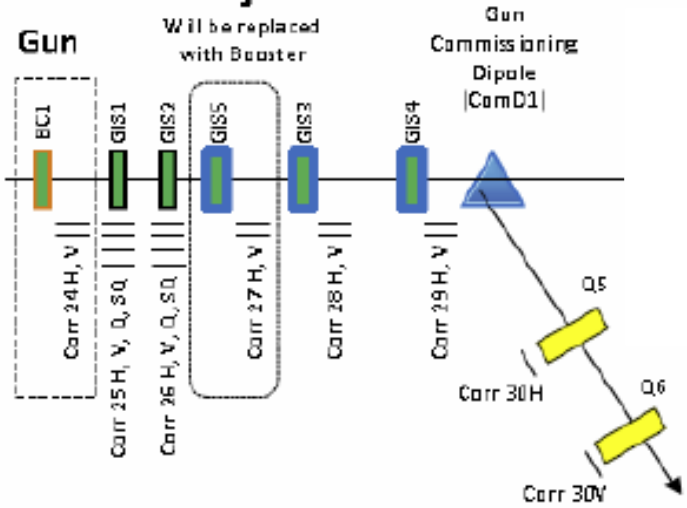

Cable Tray installed on 45° stand
Connect quads and dipole
Magnet polarity check
Maximum PS current test – heat run.

Single Carrier Suitcase Assembly

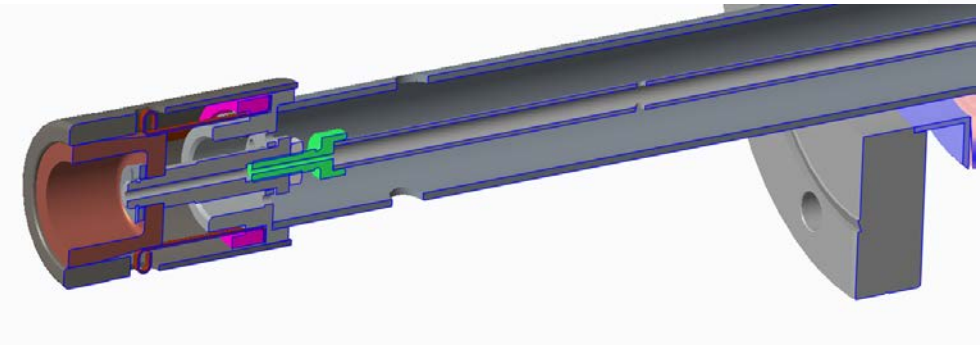

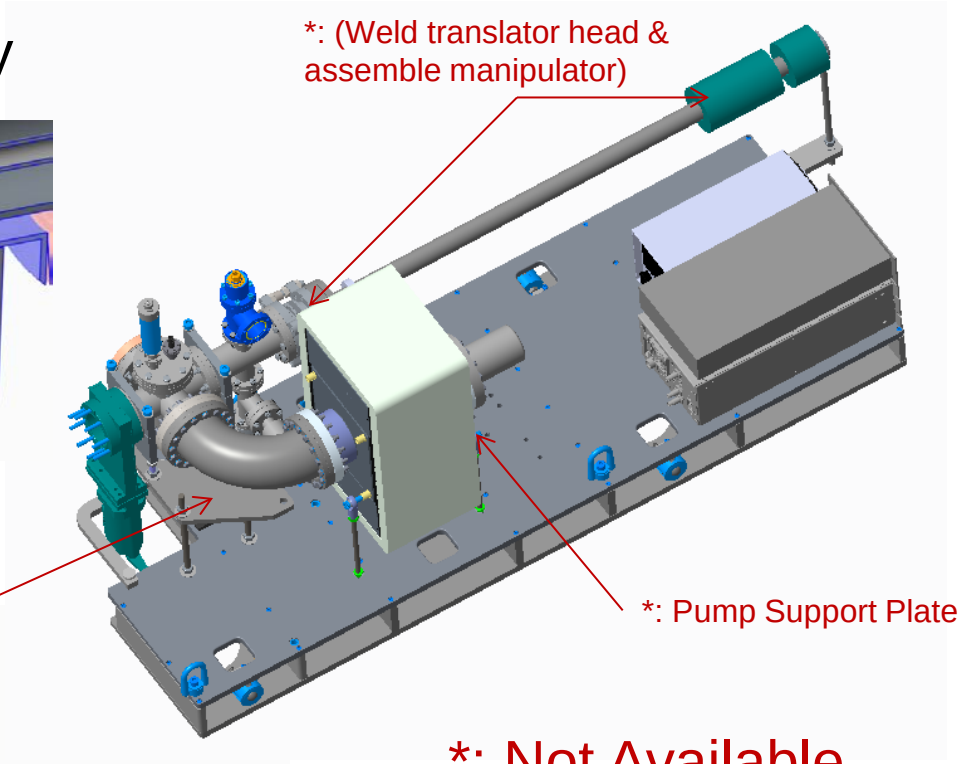

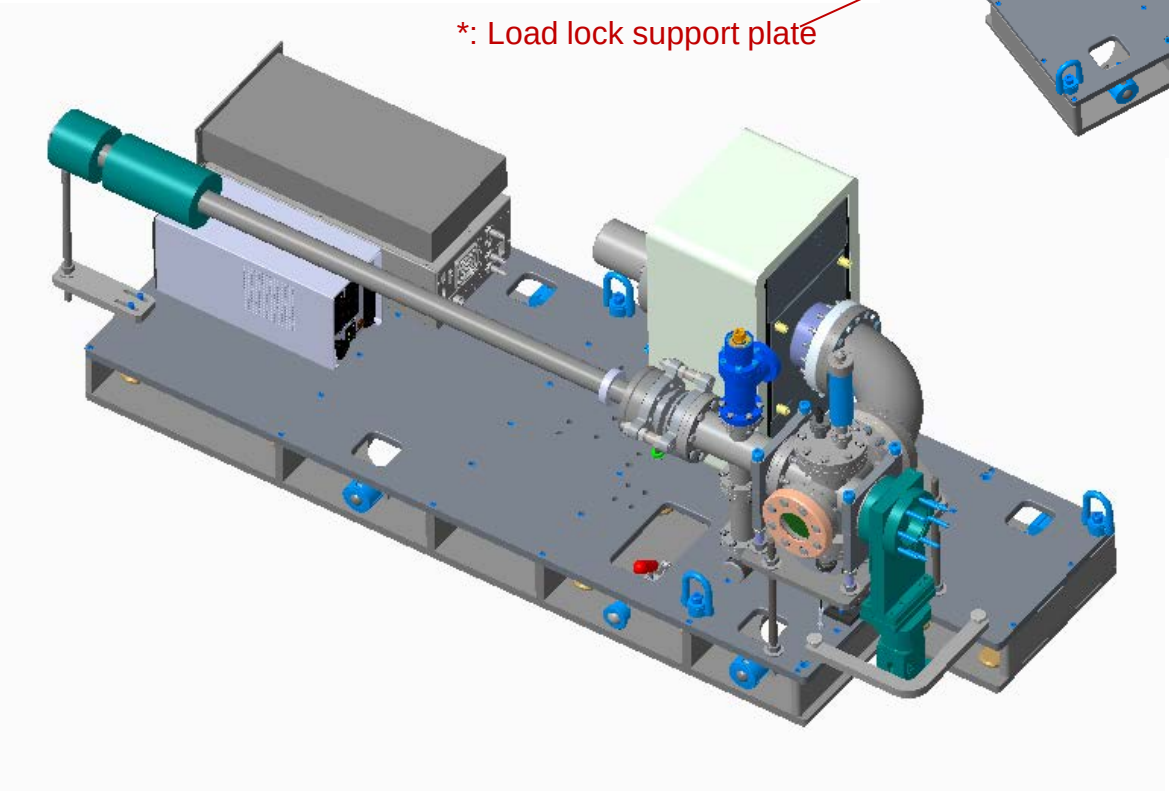

*: Not Available

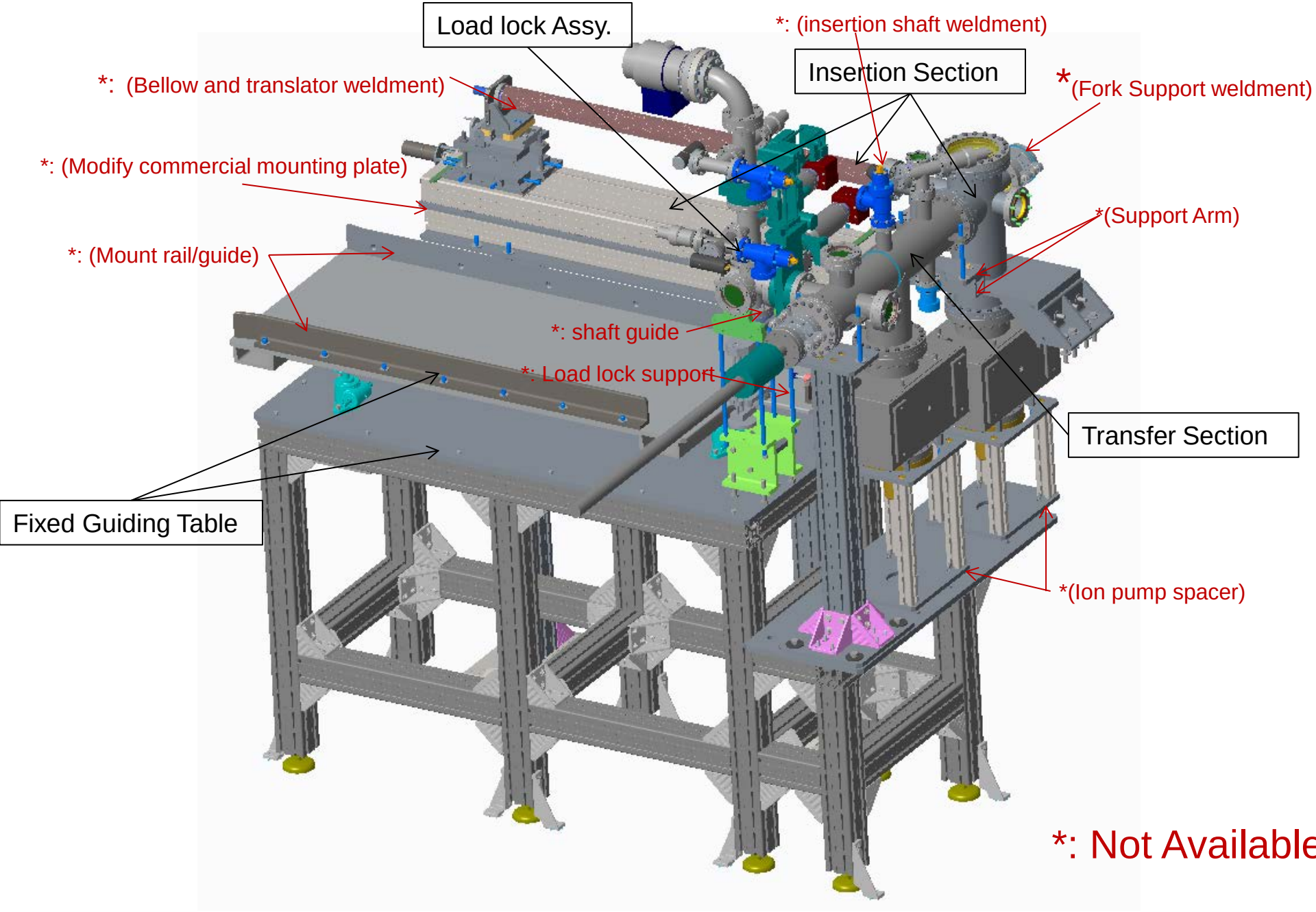
Load lock Assy.
*: (insertion shaft weldment)
Insertion Section
*(Fork Support weldment)
*: (Bellow and translator weldment)
*: (Modify commercial mounting plate)
*(Support Arm)
*: (Mount rail/guide)
*: shaft guide
*: Load lock support
Transfer Section
Fixed Guiding Table
*(Ion pump spacer)
*: Not Available

Tunnel Installations

Dates: (not based on project management science)

- Cathode systems ready for bake ~~12/30~~ 1/6
- GtB and booster section ready for bake ~~1/6~~ 1/13
- Transport under vacuum 1/13
- CeC 5 cell in tunnel for installation 1/17

Meetings

- Cathode systems installation 9:30 today EAG
- LASER systems 11:00 today MCR
- Gun to Booster Line 1:15 today SCR