Laser Work Update & Schedule

Zhi Zhao

July 14, 2016

Outline

- Vibration measurement
- Laser room
- Laser transport
- Pulse picker 1
- Pulse picker 2
- Gun table
- Laser temporal shaping
- Intensity control

Vibration Measurement

ERL laser room

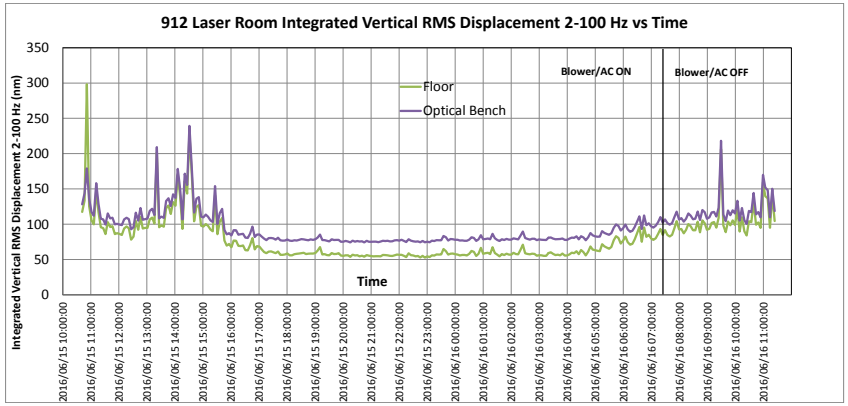

1002 F

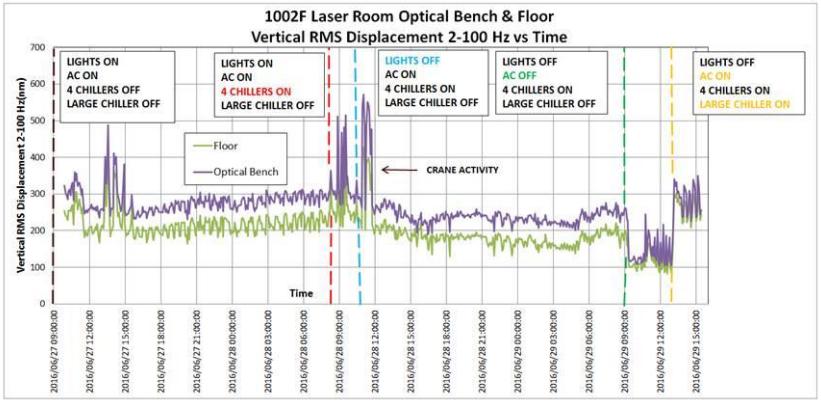

- Measurement: conclusive
- Improvement in 1002 F: needed

ERL Laser Room (I)

- Big optical table: today
- More work: electricity and shelf (maybe)
- SOP: Asher Etkin is working

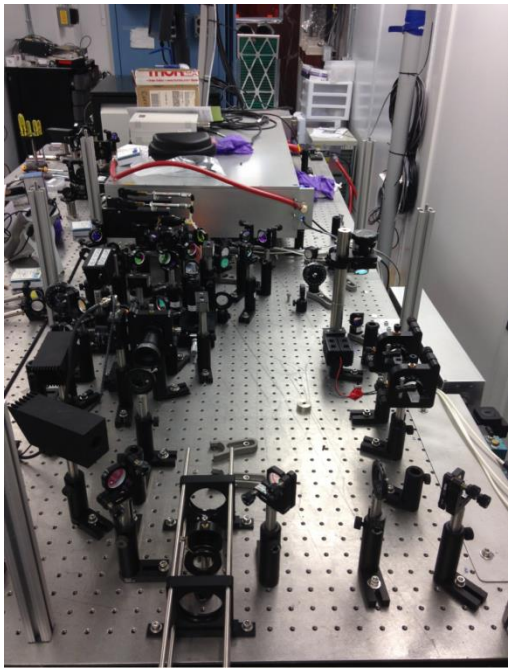

Old laser system

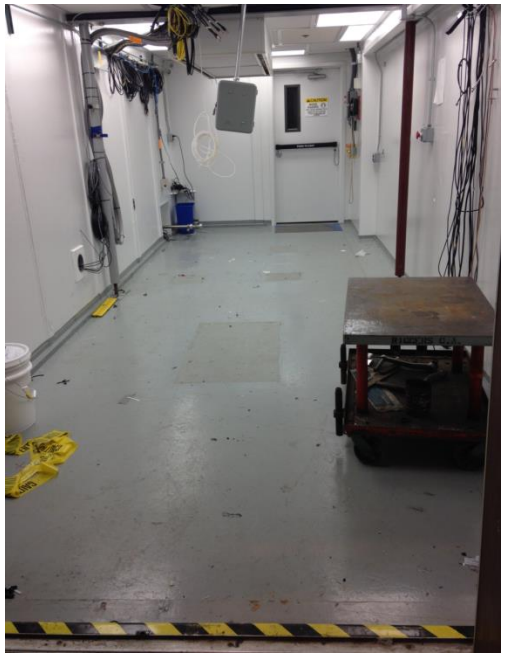

Empty room for a big table

ERL Laser Room (II)

- Home for laser RD
- Test of LEReC laser
- Challenges for CeC, eRHIC, & beam diagnostics

- Short-term concern: Interlock box
- More plug-in for interlock
- Help: *ACG group?*

Layout of Laser System for LEReC

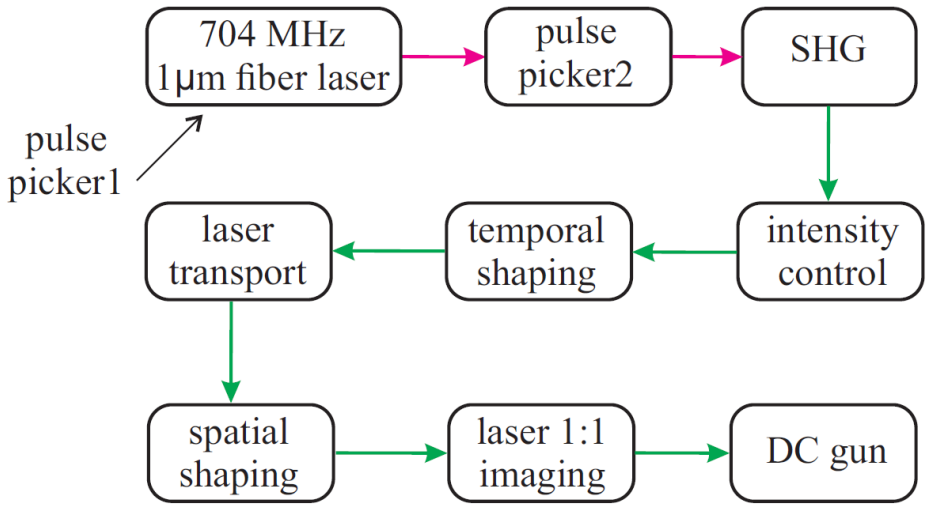

Key control

- Pulse picker2
- Intensity control
- Spatiotemporal shaping

Key diagnostics

- Laser power and QE
- Laser spatial profile
- Point stability on cathode

Laser Transport

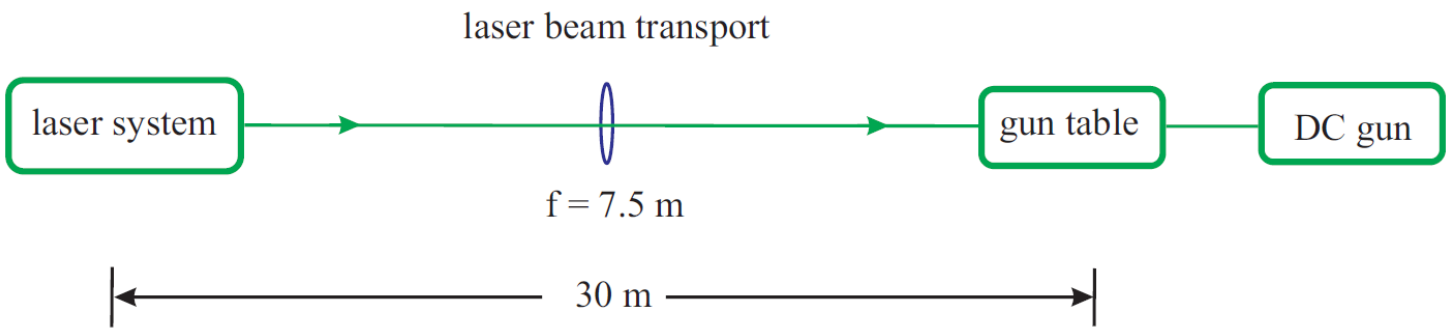

- Discussion meeting
- Details and quotes
- Design completion: this month
- Planned installation: September
- On schedule

Pulse Picker 1

- Ps generator: Tony, Mike, & Kevin
- Rack box: Tony & Craig
- More meeting for any confusion
- Test from late August

Pulse Picker2

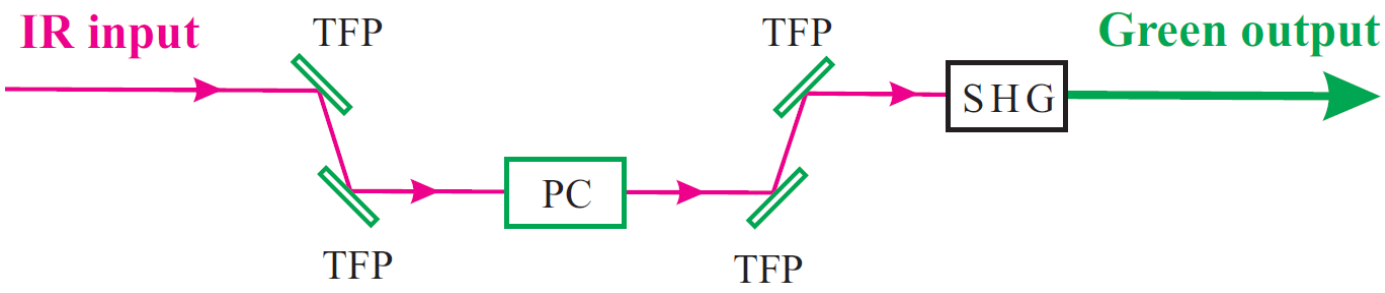

Three major requirements:

- High extinction ratio: 1000:1@IR and 10^6:1@ green
- Fast switch time: ~ 5 ns
- High average power: >100W

Crystal Stack for Laser Beam Shaping

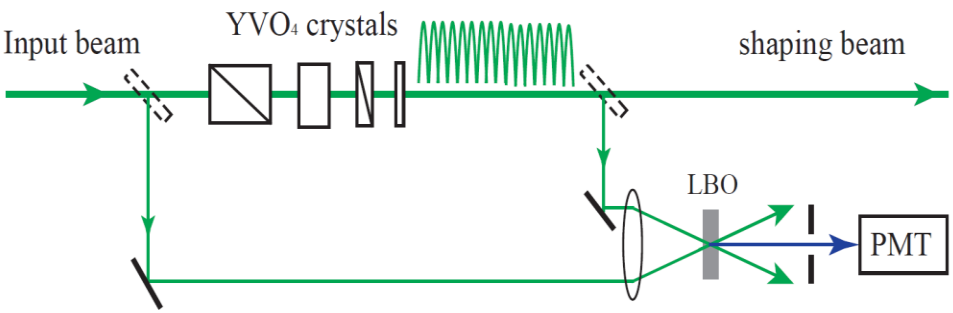

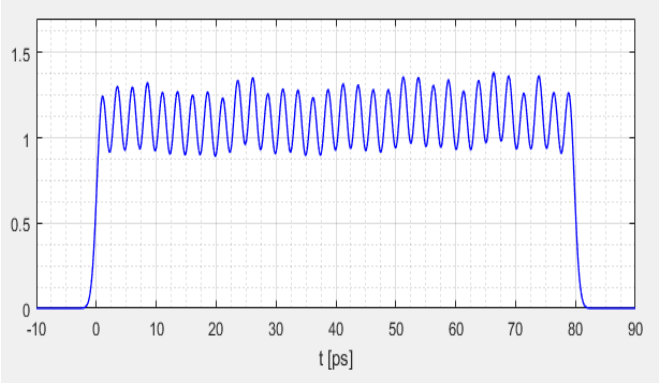

Specifications:

- Duration: 80 ps
- Rise & fall time: 2 ps
- Ripple modulation: 40%

Laser Spatial Shaping & Diagnostics

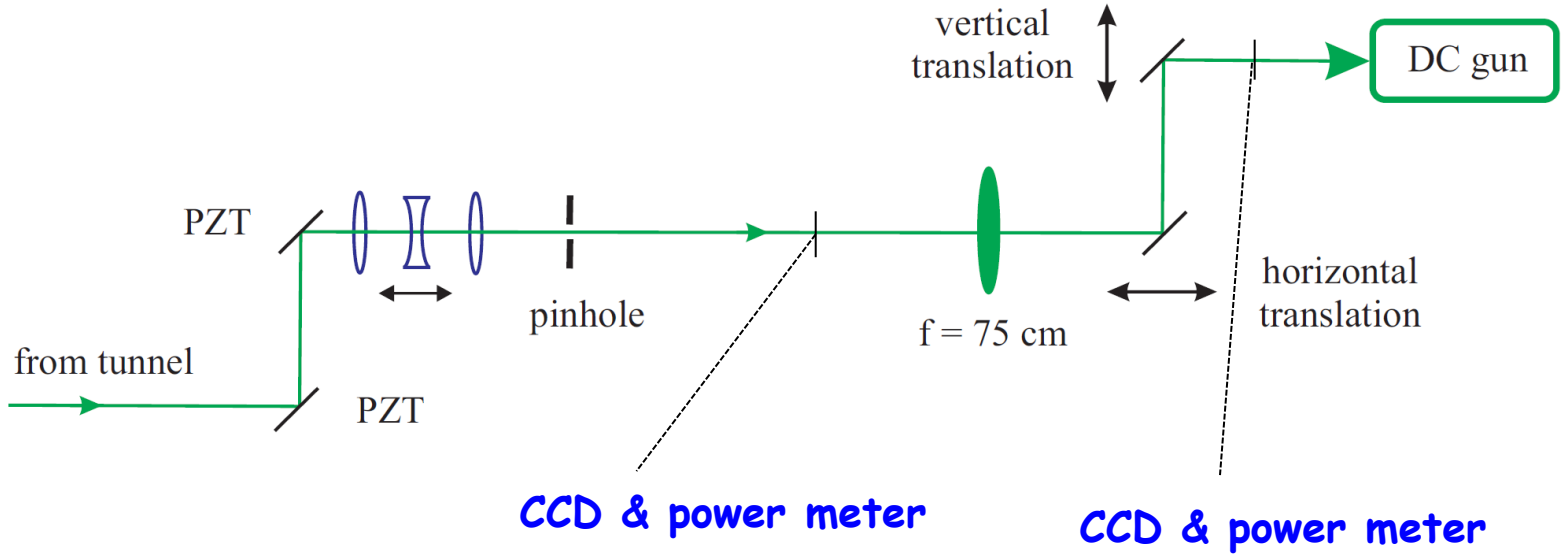

Laser control & diagnostics:

- Laser power, spatial mode, & QE
- Feedback for beam point stability
- Vibration, temperature, & humidity
- Motor control from Lenny

Intensity Control

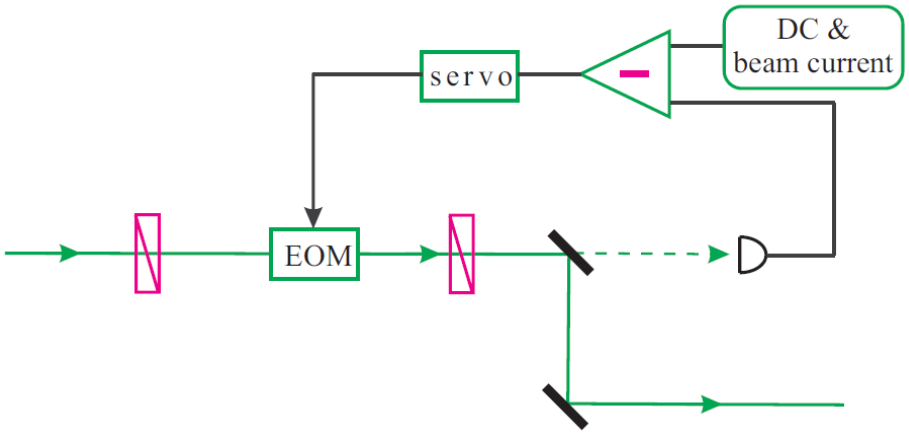

Three major functions:

- Stabilizing green light intensity
- Stabilizing beam current
- Machine protection & fast shutdown

Summary

- Laser room
- Laser transport
- Pulse picker 1

- Gun table
- Laser temporal shaping

- Pulse picker 2
- Intensity control