Laser Work Update & Schedule

Zhi Zhao

Oct. 13, 2016

Laser Trailer

- Laser trailer is back!
- Optical tables will be in soon!

Help for Laser Trailer (I)

High priority

- Laser table installation
- IT connection
- Electricity and power plug around the table: 2 rows on each side
- Two-layer shelf for the optical table
- Special Power plug for the big chiller
- 3 more power plug for small chitter & any safety concern ?
- Hole for water pipes from lobby to the laser room

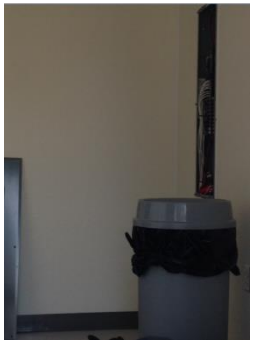

Help for Laser Trailer (II)

Low priority

- AC on/off
- Possible second shelf around the cornel
- Bugs owing to the window and doors
- Main door could not be locked properly
- CeC laser will be installed after DOE review

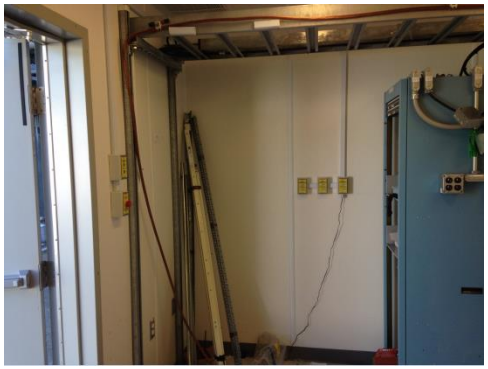

Laser Transport with Support Stands

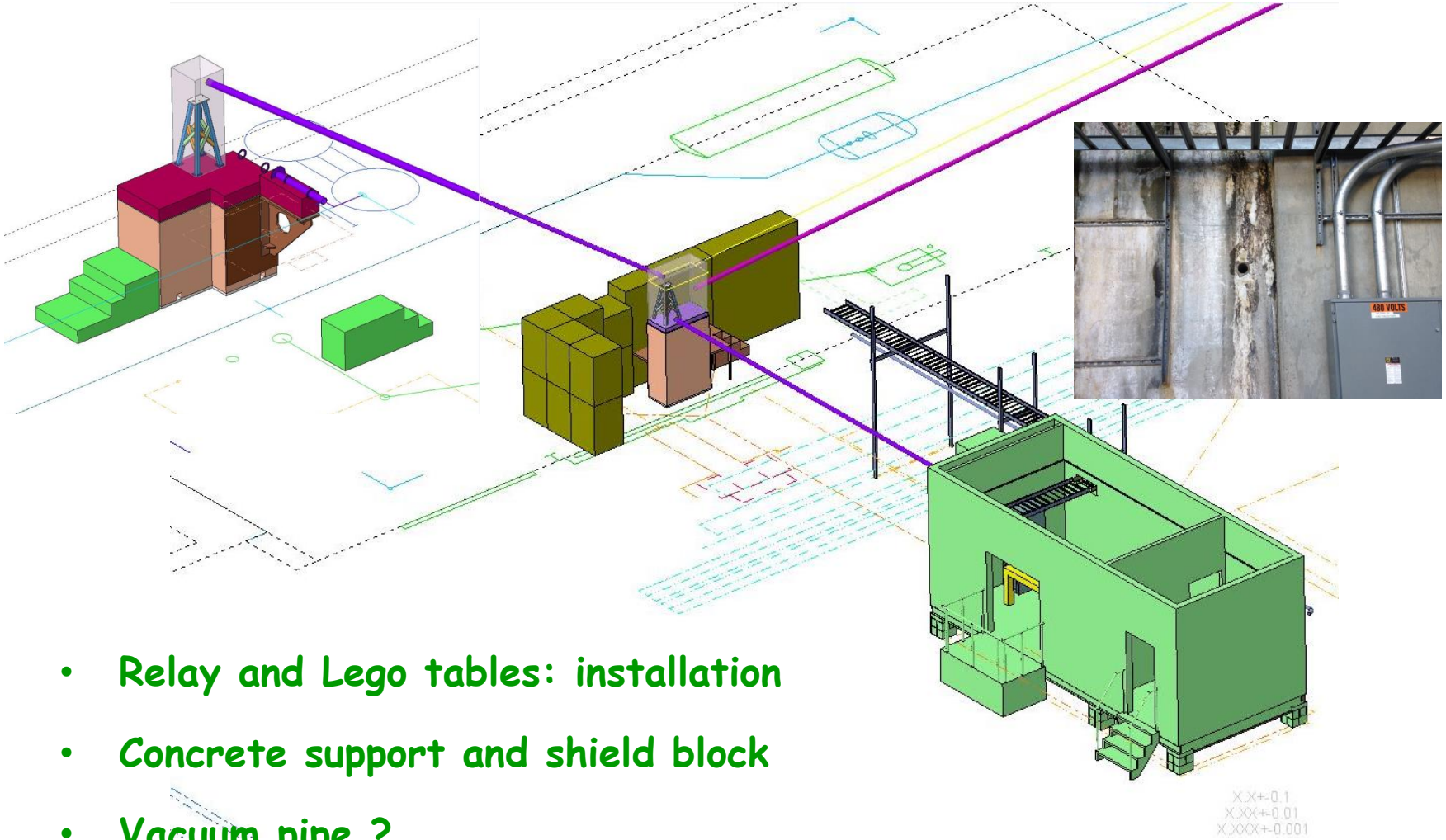

- Relay and Lego tables: installation
- Concrete support and shield block
- Vacuum pipe ?
- Possible schedule ?

Vacuum Pipe for Laser Transport

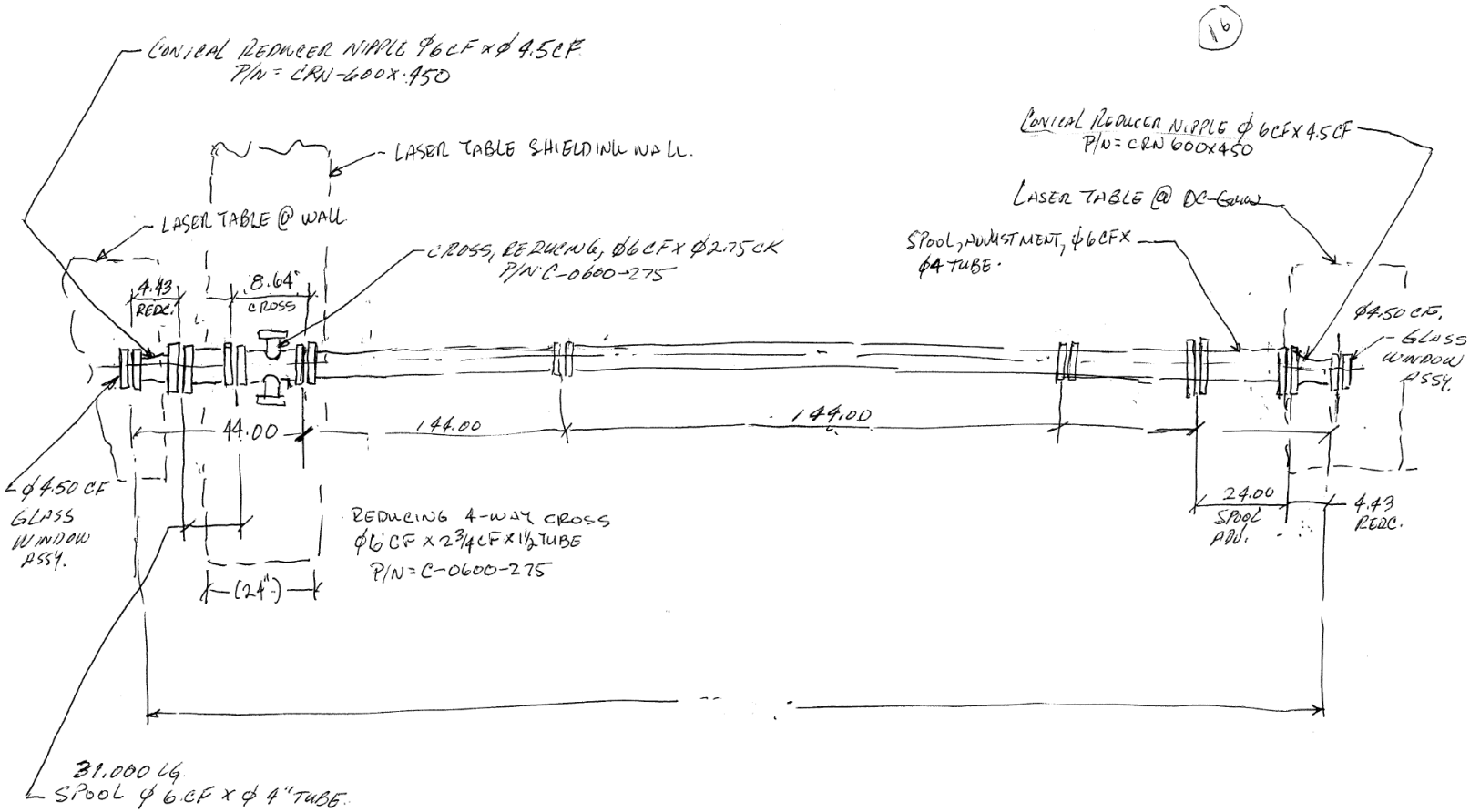

LASER TRANSPORT TUBE ASSY INSIDE IP2

EL. 80.00" F.F. @ IP2.

Stands for Laser Mirror

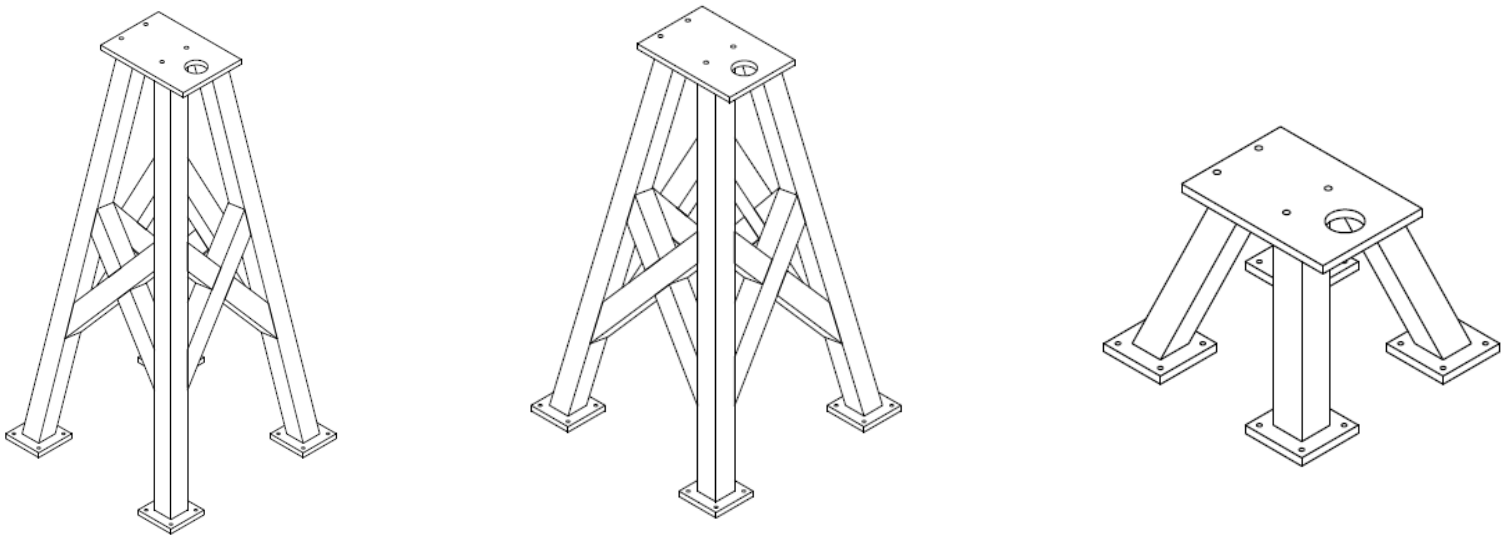

- Stands for gun table, relay table, and laser trailer
- Material order
- Schedule can be finalized soon!

Laser Transport – Final Check

- Three optical tables: 5x12x2 ft^3, 2x4x4" ft^2, 4x6x1 (4") ft^3 & extension (next year)
- Concrete supports for the Lego and Relay tables
- View window, flange, vacuum pipe, and mechanical support
- Mirrors, lens, & position feedback
- Stands for laser beam
- Walls for laser tables
- Cable feedthroughs
- A hole for vacuum pipe
- Temperature & humidity control (not immediately)

Table & Support for CeC

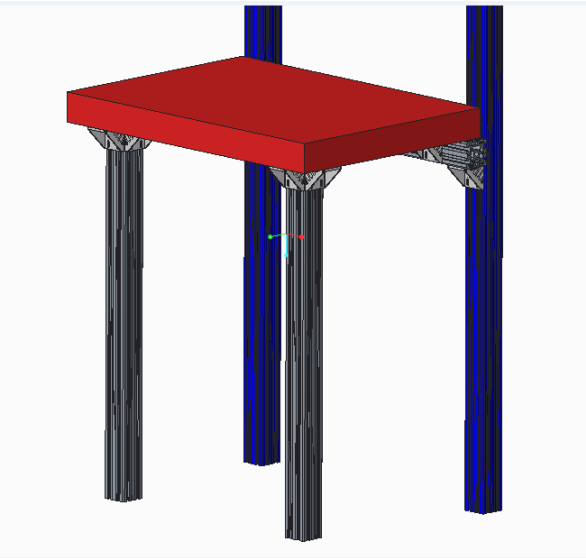

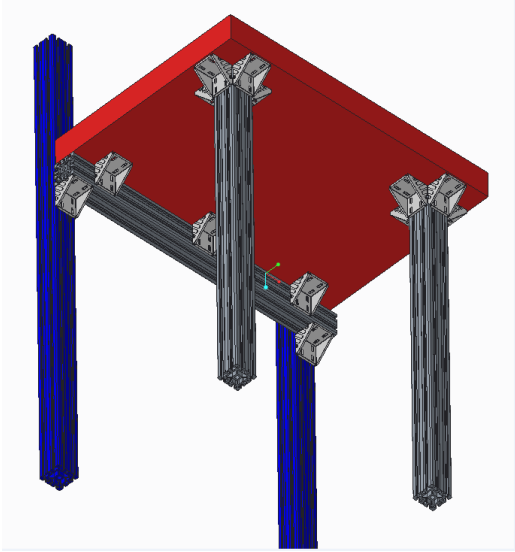

- Table and support: order
- Laser transport from relay table to the CeC table
- Vacuum option: relay table to CeC table
- Table setup: copy the LEReC
- Installation after mid-Nov or early Dec
- Use free-space transport: try our best

Table for Shaping & Cross-correlator

- Motion/rotation control
- Laser spatial shaping
- Setup for gun table
- Cross-correlator

Fiber Laser

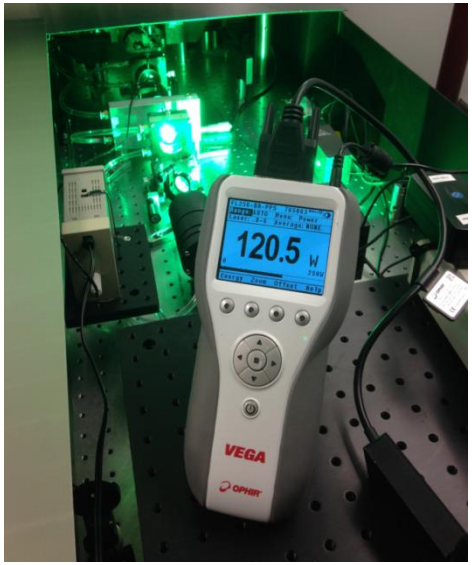

- Laser test in ERL: IR: 200W, Green: 120W
- Finish test: next weekend
- Two pulse pickers
- Start moving late this month

Fiber Laser: Beam Point Instability

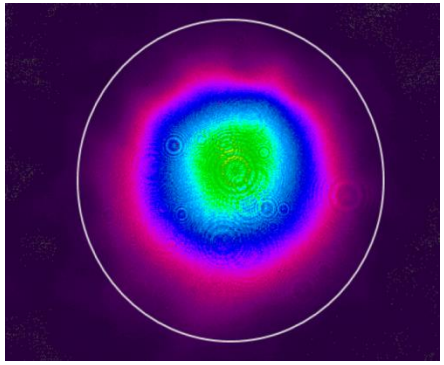

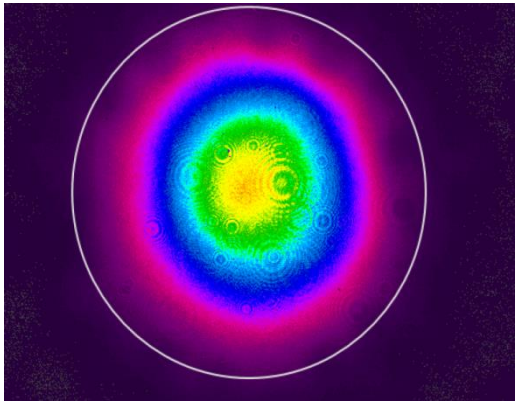

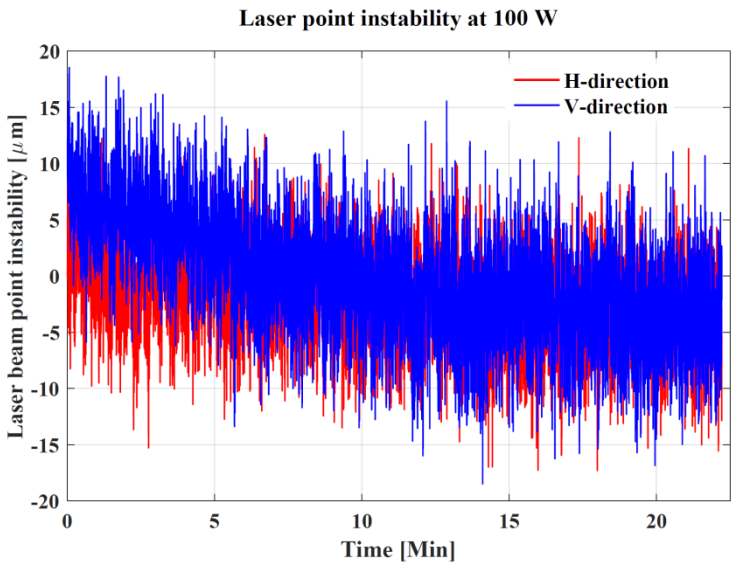

RMS-h: 4.0 μm; RMS-v: 5.3 μm

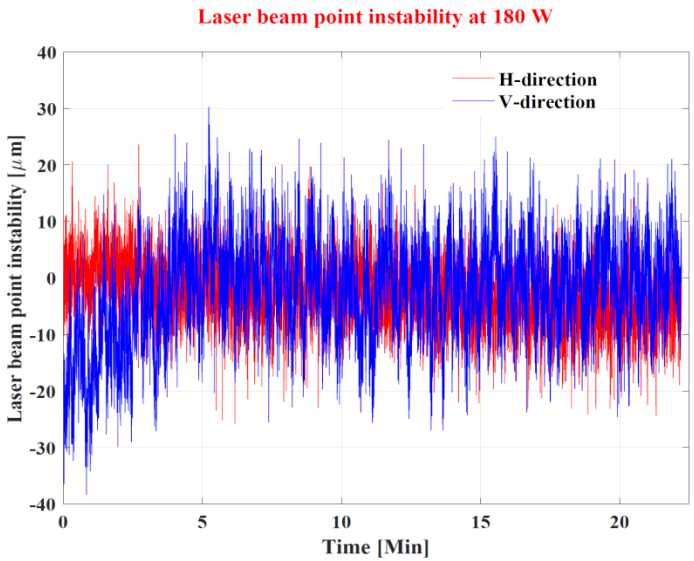

RMS-h: 5.6 μm; RMS-v: 9.0 μm
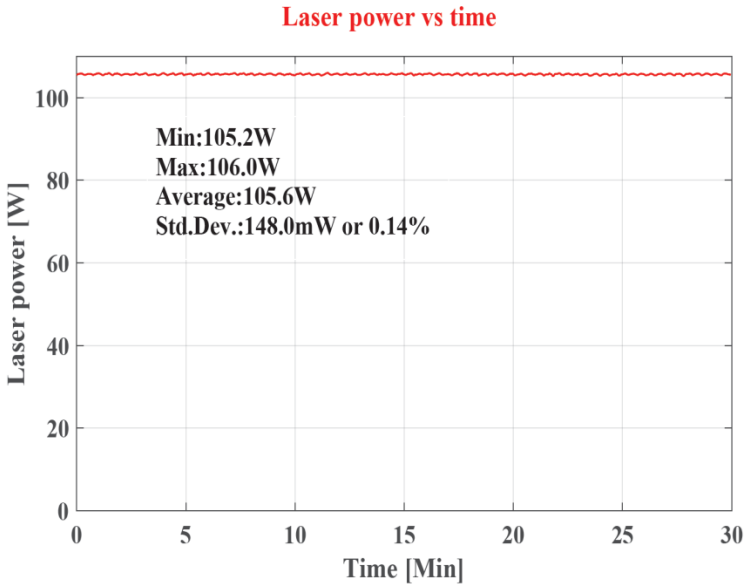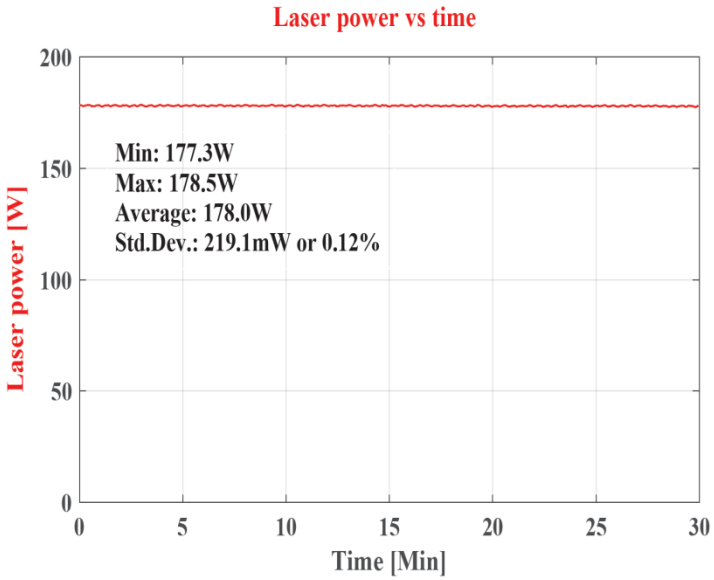
Fiber Laser: Power Stability