Status of LEReC MPS

December 19, 2016

S. Seletskiy for LEReC team

Overview

- Introduction
- LEReC beam structure and operational beam modes
- Basic MPS parameters: reaction time, ultimately safe operation mode & tolerable routine losses
- Failure scenarios and the MPS diagnostics
- The MPS logic
- The MPS to the laser interface
- Current status

Introduction

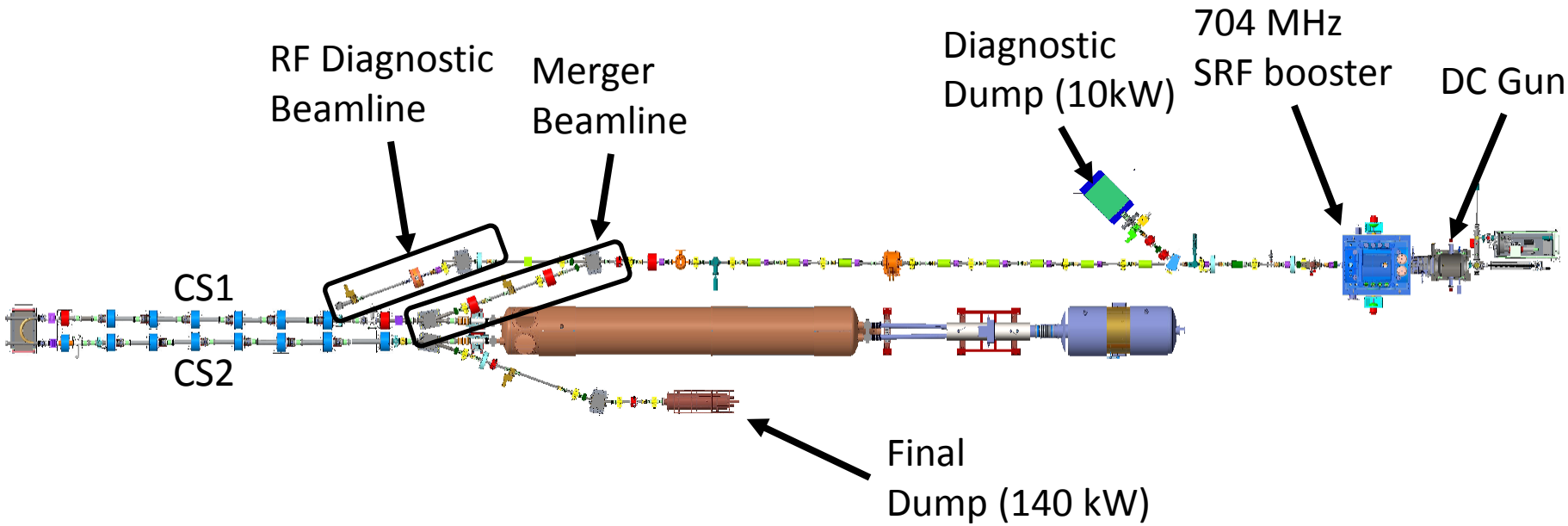

- Some machine parameters pertinent to the MPS design:
  - Beam energy out of the gun is 400 keV
  - Beam energy after the Booster is 1.6 – 2.6 MeV (the maximum possible energy is 3 MeV)
  - Operational beam current is 35-55 mA (baseline with trains); CW 85 mA (1.6 MeV), 67 mA (2 MeV)
  - Operational beam power is <140 kW
  - Typical transverse RMS beam size throughout the LEReC is >1 mm
  - The smallest transverse RMS beam size in the LEReC (Merger beamline) is 0.25 mm
- Missteered beam at full power can damage the vacuum chamber and in-vacuum beamline components.
- LEReC MPS shall protect machine from such a damage.

LEReC beam structure I

- Continuous sequence of 9 MHz macro-bunches or
- Trains (of length Δt) of 9 MHz macro-bunches repeated with frequency 1/T

Q_b – charge per bunch (operational 130 pC)
N_b – number of bunches per macro-bunch (operational 30)
Δt – length of train of macro-bunches
N_{mb} – number of macro-bunches per train
T – time period between trains

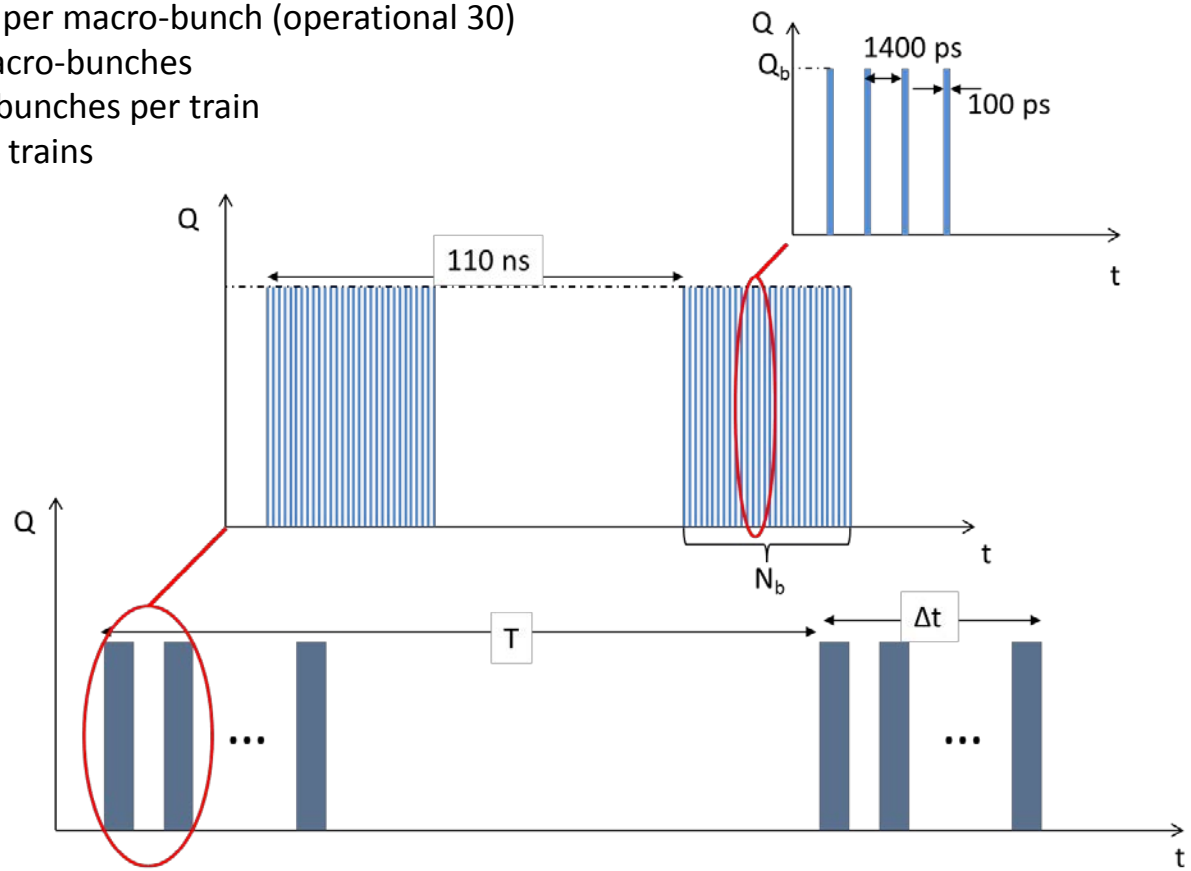

LEReC beam structure II

- CW 704 MHz bunches or
- Trains (of length Δt_{CW}) of 704 MHz bunches

Δt_{CW} – length of train of CW 704 MHz bunches

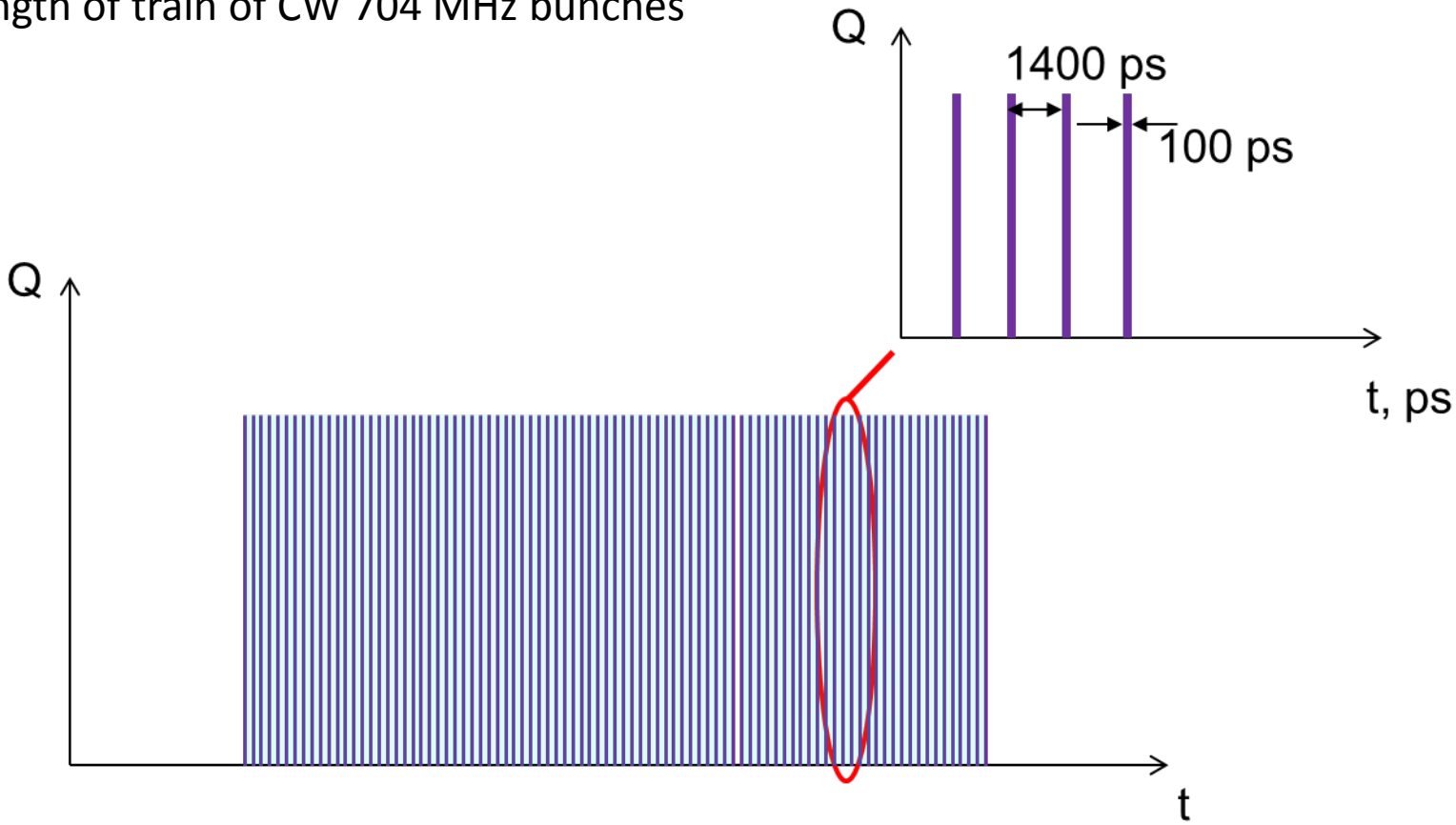

LEReC beam parameters

Electron beam requirement for cooling			
Kinetic energy, MeV	1.6*	2	2.6
Cooling section length, m	20	20	20
Electron bunch (704MHz) charge, pC	130	170	200
Effective charge used for cooling	100	130	150
Bunches per macrobunch (9 MHz)	30	30	24-30
Charge in macrobunch, nC	4	5	5-6
RMS normalized emittance, um	< 2.5	< 2.5	< 2.5
Average current, mA	36	47	45-55
RMS energy spread	< 5e-4	< 5e-4	< 5e-4
RMS angular spread	<150 urad	<150 urad	<150 urad

Beam modes

Timing pattern	Beam modes	Goals	Power
N_b = 30 N_{mb} = 1 T = 1 s	Low Current Mode (**LCM**); Q_b=30-200 pC	Get beam trajectory through the whole machine. First iteration on setting the RF. Set optics for nominal Q_b. Measure beam emittance. Measure beam envelope through the CS.	P ≤ 16 mW I ≤ 6 nA
N_b = 10,15,20,25,30 Δt ≤ 250 us T = 1 s - 5 s	RF studies mode (**RFSM**); Q_b ≤ 200 pC	RF fine-tuning. Study beam longitudinal dynamics.	P ≤ 7 W I ≤ 3 uA
N_b = 30 Δt ≤ 1000 ms T = 1 s	Transitional mode 1 (**TM1**); Q_b=200 pC	Gradual transition from LCM mode to HCM mode, keeping nominal Q_b.	P ≤ 140 kW I ≤ 55 mA
	Transitional mode 2 (**TM2**); Q_b=200 pC	Alternative to TM1	P ≤ 140 kW I ≤ 55 mA
N_b = 30 Δt=T	High current mode (**HCM**); Q_b=130-200 pC	Getting nominal parameters of e-beam in the CS.	P = 56-140 kW I = 35-55 mA
704 MHz CW	Q_b=95-120 pC; CW mode (**CWM**)	Alternative to HCM.	P = 135 kW I = 67-85 mA

MPS reaction time I

- Typical beam rms R > 1 mm throughout the whole LEReC beamline. In the merger (at the centers of respective 20deg dipoles and in between 2 lenses) rms R = 250 um.
- Bending magnets (especially in the merger) are the most dangerous locations.
- For σ=1 mm at normal incident angle the full power beam melts 2 mm thick vacuum chamber in 0.4ms.
- In the merger at normal incident angle full power beam melts 2 mm thick vacuum chamber in 25 us.

Stainless steel 304 vacuum chamber has a thickness w ~2 mm, therefore, it stops 100% of the beam. St. steel specific heat capacity (*SHC*) is 502.4 J/(kg·K), its density (ρ) is 7999.5 kg/m^3 and it melts at 1450 C. Temperature increase in time t is:

$$\Delta T = \frac{P \cdot t}{SHC \cdot \rho \cdot \pi\left(\sqrt{2}\sigma\right)^2 w}$$

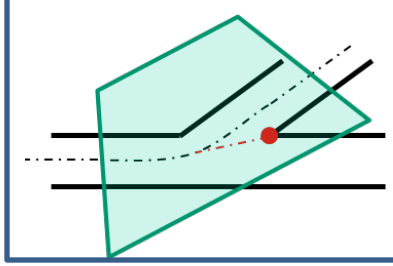

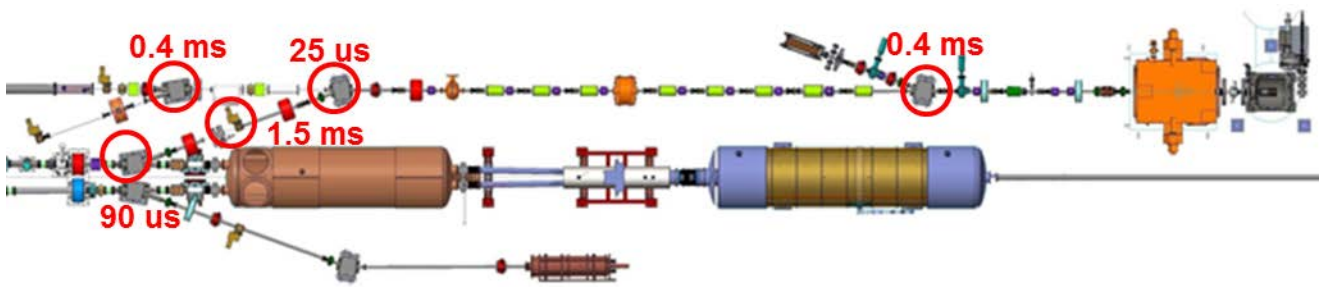

- Missteering can happen due to the change in magnet fields (slow process, doesn't determine the MPS reaction time) and the RF phase jump (can happen in few us).
- Yet, a significant jump in energy will change beam focusing and beam energy simply can not be increased by a factor of 2. Therefore, the worst case <u>scenario of ultra-focused beam hitting a crotch in the bend vacuum chamber at a normal incident angle can not be realized</u>.

MPS reaction time II

- The maximum incident angle at which the high power tightly focused beam can hit the vacuum chamber is 35 mrad (defined by distance between adjacent magnets and diameter of the vacuum chamber).
- The full power beam hitting the in-vacuum component with an angle close to the normal one will have rms size larger than 1 mm.
- The maximum energy that can be inadvertently reached is 3 MeV.
- Under various scenarios the calculations of the time to reach ultimate yield strength in the vacuum chamber was performed both analytically and in ANSYS (there was a good agreement between the two).

					normal incident		normal incident		angle=0.035 rad		
					σ=1 mm		σ=0.25 mm				
Pattern	Q_b, pC	I_av, mA	E, MeV	P, kW	t_melt, us	t_yield, us	t_melt, us	t_yield, us	t_melt, us	t_yield, us	
9 MHz; 30 bunch per pulse	190	52	1.6	83	655	66	41	4.1	1171	117	
			2	104	525	53	33	3.3	943	94	
			2.6	135	400	40	25	2.5	714	71	
			3	155	350	35	22	2.2	629	63	
	130	35	1.6	57	950	95	60	6	1714	171	
			2	71	765	77	48	4.8	1371	137	
			2.6	92	590	59	37	3.7	1057	106	
			3	106	510	51	32	3.2	914	91	
CW 704 MHz	120	86	1.6	137	395	40	25	2.5	714	71	
			3	257	210	21	13	1.3	371	37	critical case
	95	68	2	136	400	40	25	2.5	714	71	
						defines MPS reaction time				defines MPS reaction time	

simulated in ANSYS
analytic estimate

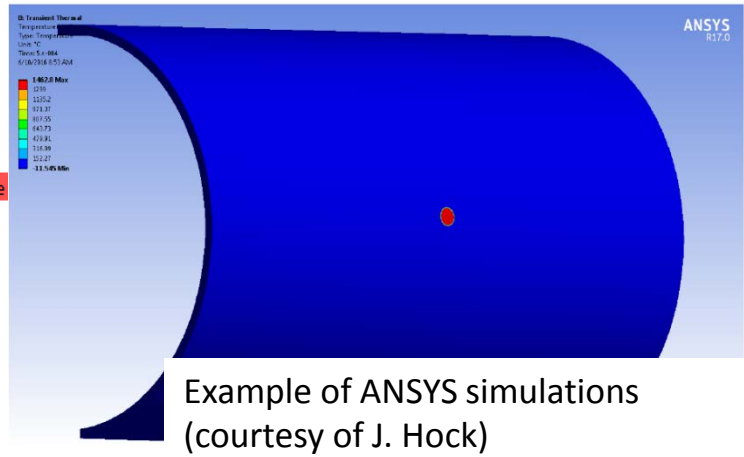

Example of ANSYS simulations (courtesy of J. Hock)

- As a result it was determined that the <u>minimum required MPS reaction time is 20 us</u>

Tolerable routine losses

- What routine current loss is tolerable?
  - Typical beam throughout machine has $\sigma = 2$ mm (equivalent uniform density circle $R_0 \approx 2.83$ mm).
  - For any beam mode other than the LCM we will interlock BPMs around the bends, monitor bend currents and forbid operation of the insertion devices. Thus, if the beam hits the chamber the worst incident angle will be determined by chamber diameter and the distance between magnets $\alpha < 0.042$ rad.

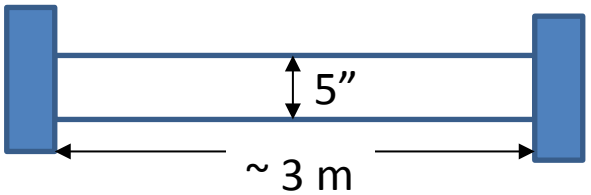

  - Assuming that the power is transferred away from the hit location through conductance only (for St. St. 304 thermal conductivity is $\kappa = 16.2$ W/m/K), we get:

$$P = \frac{\kappa T 2\pi w}{-\ln\left(\frac{R_0}{1.5 \cdot \tan\alpha}\right)}$$

- If we want to keep the temperature rise $T \approx 50$ K then $P \approx 3.3$ W
- For 3 MeV beam (the highest physically possible energy) **tolerable $\boldsymbol{I_{loss} \approx 1.1}$ uA**.

Ultimately safe operation mode I

- From similar considerations, we can afford ~1.3 W of tightly focused beam (σ = 250 um) to hit in-vacuum surface at normal incident angle.
- At 3 MeV (the highest beam energy one can inadvertently achieve) we obtain the current threshold of the ultimately safe operation mode to be 400 nA.

$$P = \frac{\kappa T 2\pi w}{-\ln\left(\sqrt{2}\sigma\right)}$$

- On the other hand we are operating beam with very high peak power (for instance, peak P=371 kW for 2.6 MeV beam energy).
- For 3 MeV 704 MHz CW with 200 pC/bunch it takes 1 us to reach 170 C (from temperature of 30 C)

$$\Delta T = \frac{P \cdot t}{SHC \cdot \rho \cdot \pi\left(\sqrt{2}\sigma\right)^2 w}$$

- If we want to afford 50 C temperature rise only then in the pulsed mode the current shall be limited to 25 nA.

- <u>Therefore, the current threshold of the ultimately safe operation mode is 25 nA.</u>

Ultimately safe operation mode II

- We can operate in LCM (N_b = 30, N_{mb} = 1, T = 1 s, $Q_b \leq$ 200 pC) without interlocking beam trajectory or focusing.
- In the worst case scenario the vacuum chamber will be heated up by ~ 7 K by an "energy hammer" hitting the chamber with 1 Hz rate.

Effect of 42 ns long macro-pulse with 0.25 mm RMS transverse beam size hitting the vacuum chamber at a normal incident angle

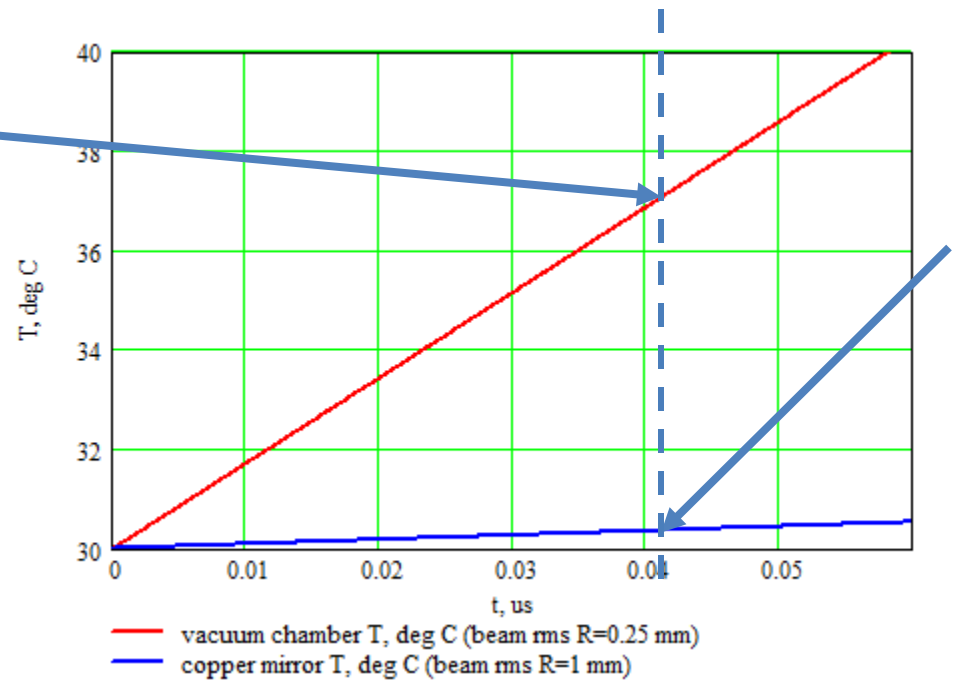

Effect on copper mirror intercepting 42 ns long macro-pulse with 1 mm RMS transverse beam size at 45 degree angle

- For stainless steel the temperature increase to reach the maximum yield strength is 140 K.
- Apparently, the "energy hammer" effect is well within the range of elastic deformation of the stainless steel and we don't expect any fatigue failure from such small thermo-mechanical stress.

Basic parameters of LEReC MPS

- Reaction time: 20 us
- Tolerable routine losses: 1 uA
- Current threshold for the ultimately safe operation mode is 25 nA
- LCM (N_b = 30, N_{mb} = 1, T = 1 s, $Q_b \leq 200$ pC) is an ultimately safe mode. Any beam manipulations are allowed in LCM.

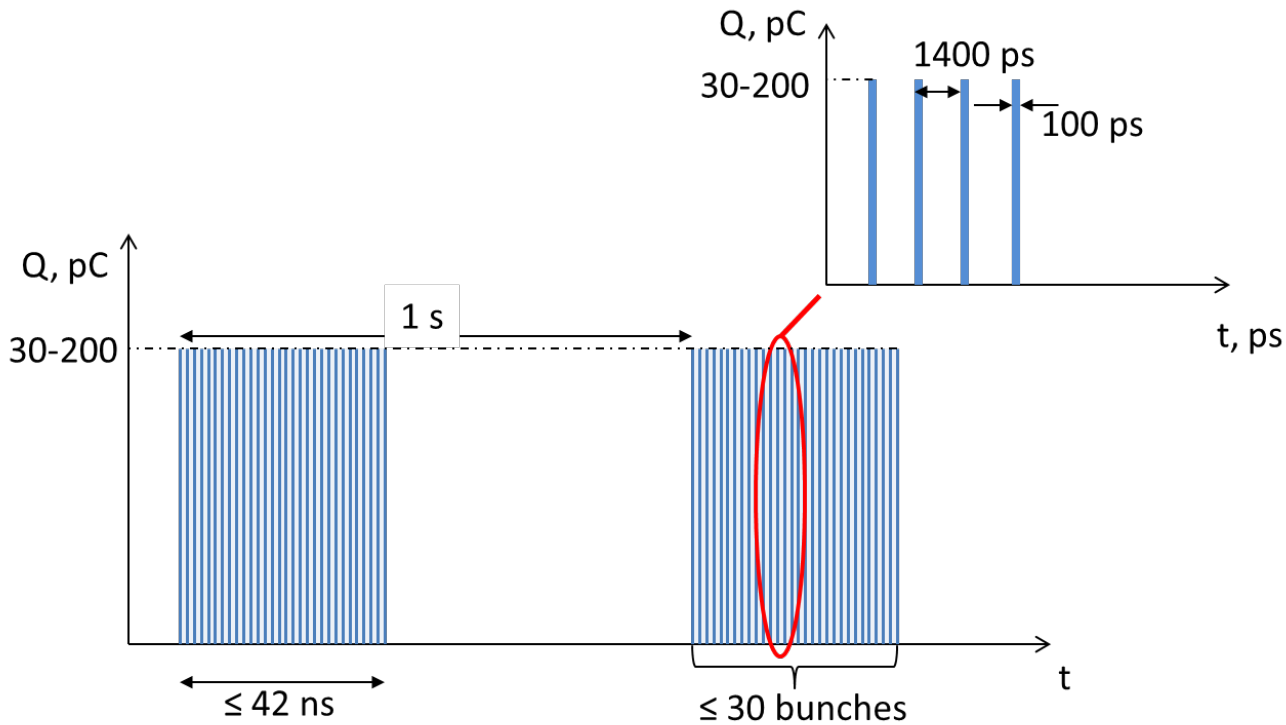

Failure scenarios

- Beam is lost inside the gun
- Laser failure can result in the train of electron bunches having the same average beam power but carrying a charge per bunch which differs from the design one. These wrong-charge bunches will not be focused properly and will get lost at the entrance of the SRF Booster.
- Wrong power beam hits YAG, Vacuum Valve, Halo Monitor, Emittance Slit, Dump or Vacuum Chamber

Beam lost inside or close to the gun (I)

- Such loss shall be excluded altogether
- Controls:
  - Administrative control – start commissioning with minimally observable charge and current and establish good beam trajectory out of the gun
  - Monitor anode corrector
  - Monitor difference between the laser power*QE and FCT measured beam current
  - We might monitor laser input mirror angles as well

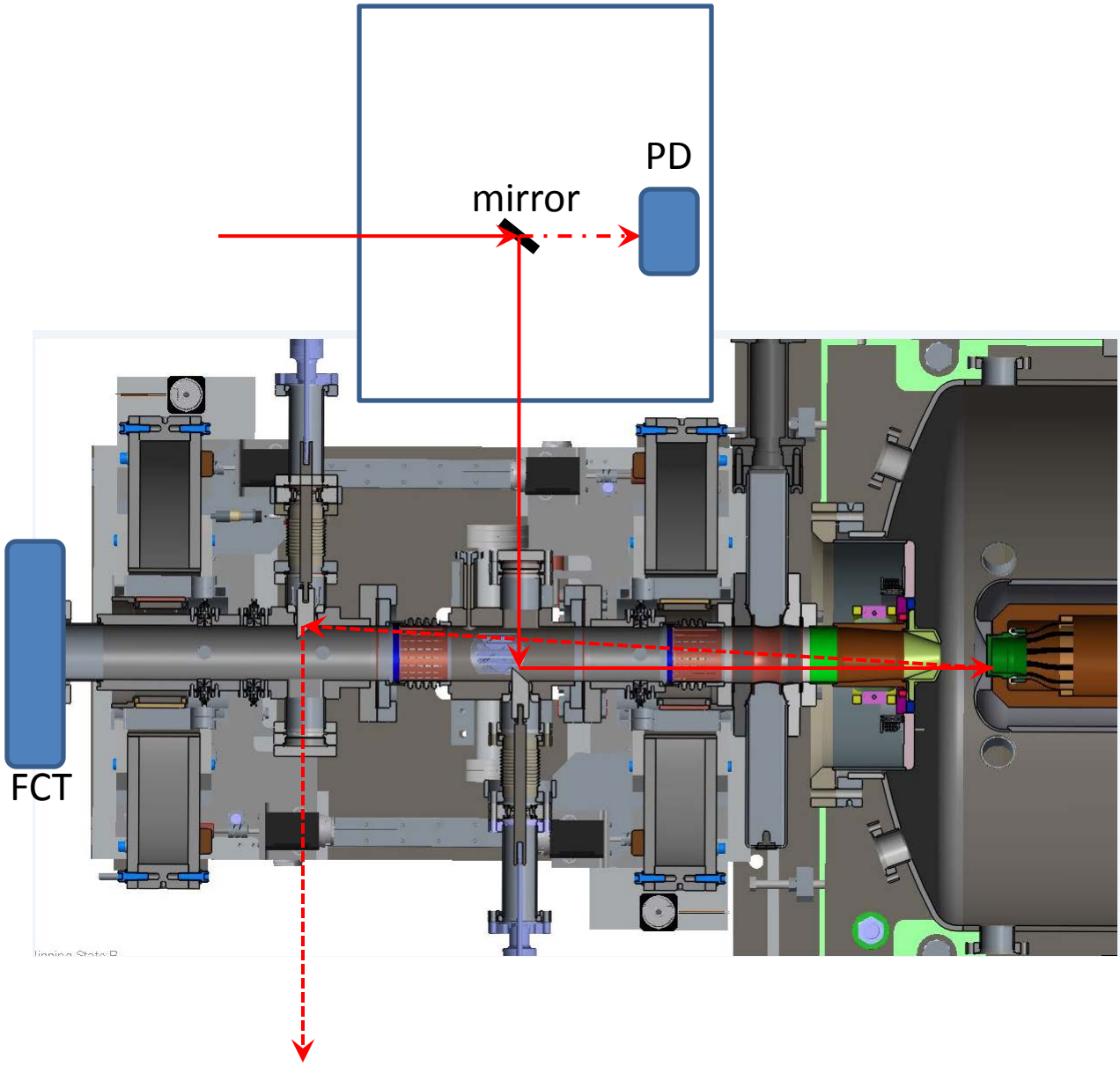

Beam lost inside or close to the gun (II)

- Tolerable current loss in the gun:
  - Assuming:
    - stainless steel material (thermal conductivity is $\kappa = 16.2$ W/m/K) of thickness w = 2 mm
    - Flat-top beam with radius R = 1 mm
    - 400 keV beam energy
    - Normal incident angle
    - Tolerable temperature rise T = 50 K
  - In steady state:

$$P = \frac{\kappa T 2\pi w}{-\ln R} = 1.5 \text{ W}$$

<u>Safe current loss is 3.75 uA</u>

- It is a small current. Such loss will be hard to detect even in pulsed mode if the length of the pulse is tens of milliseconds.
- For instance, if 1 pC per bunch loss can be reliably detected then 3.8 uA corresponds to 14 ms trains of macrobunches with 30 bunches per macrobunch and 1 Hz pulse repetition rate.

Beam lost inside or close to the gun (III)

- We have a vacuum gauge in the gun with vacuum activity detection time of 40 ms.
- It shall be safe to set the threshold of current loss detection in such way that the current lost in 704 MHz CW mode doesn't increase the hit-spot temperature by more than 50 K.
- Assuming beam parameters listed on the previous slide we get **current threshold of 80 uA**
- Such loss shall be detectable in the pulsed mode.
- Fore instance, for pulses with 5% duty cycle (first half of 2017 run) 80 uA loss corresponds to the loss of ~6 pC per bunch (with 30 bunches/macrobunch).

Beam lost inside or close to the gun (IV)

- In CW mode 80 uA current won't be detectable with FCT.
- For example, in 704 MHz CW 80 uA corresponds to 0.11 pC/bunch. Most probably it is below the noise level.
- Hopefully, the potential current losses in the gun higher than a few hundred of microamps will be detected by BLMs long before gun vacuum gauge reacts. Otherwise, the gun might get damaged.

Temperature increase over the reaction time of the vacuum gauge (40 ms) depending on the detectable loss current in the gun (704 MHz CW is assumed):

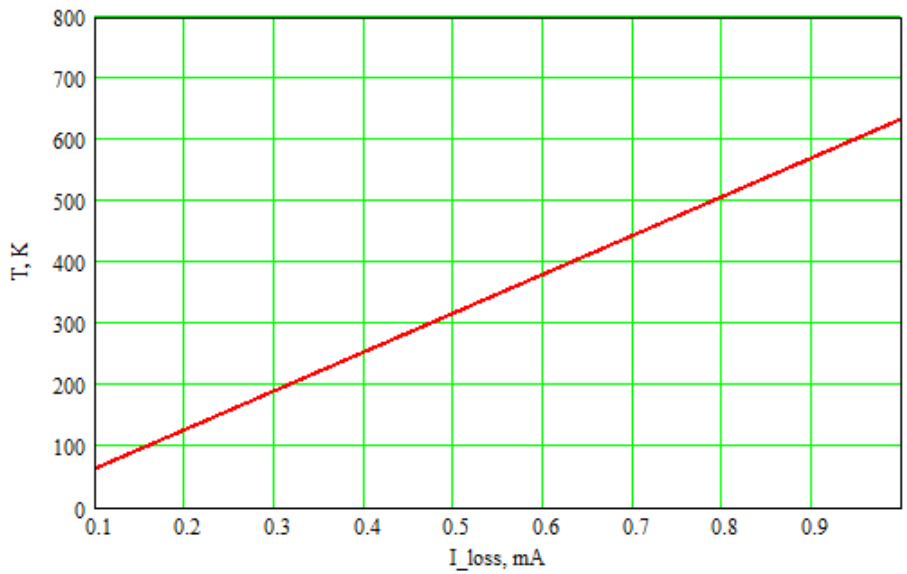

- It is important to always check the beam trajectory out of the gun in the LCM prior to switching to the HCM. So that we have administrative protection against beam loss in the gun even without the differential measurements

Laser failure & beam loss inside SRF Booster

- Sub-Watt of distributed losses is acceptable
- SRF quench protection is adequate for higher distributed losses
- We shall protect it against direct losses
- Controls:
  - Administrative control – find proper trajectory through SRF cavity and find proper focusing in LCM.
  - Monitor BPMs upstream and downstream of the SRF Booster to protect it against direct hit by the beam
  - Monitor solenoids in front of the SRF booster to help with protection against distributed losses

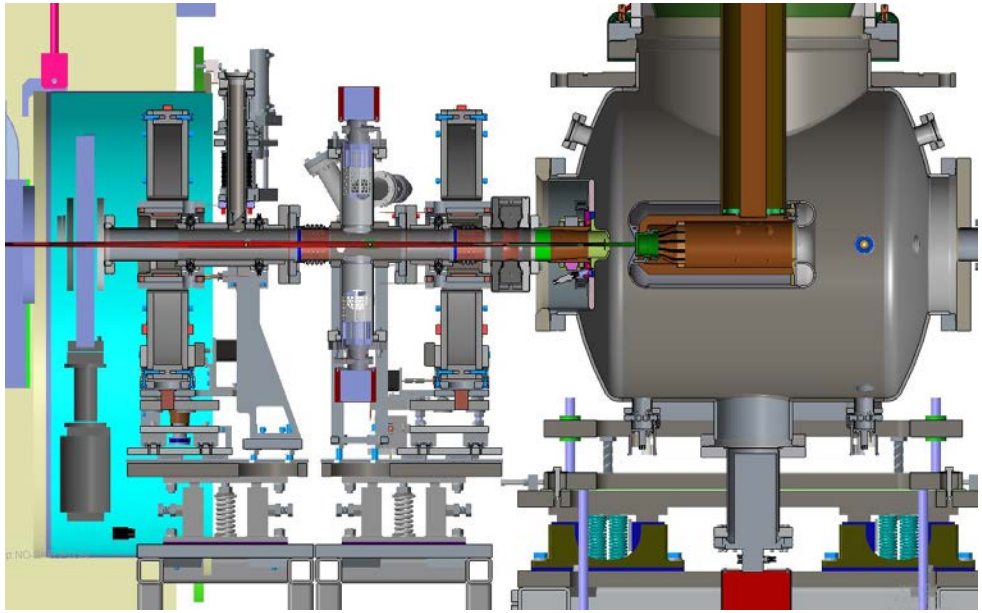

Catastrophic Beam loss in SRF Booster

- Suppose that bunch charge suddenly jumps to 1 nC due to highly improbable set of operators errors.
- At 400 keV, 9 MHz train of 30-bunch macro-bunches will have 110 kW power lost in the bottle-neck (we are assuming that this power is uniformly distributed over the bottle-neck surface)

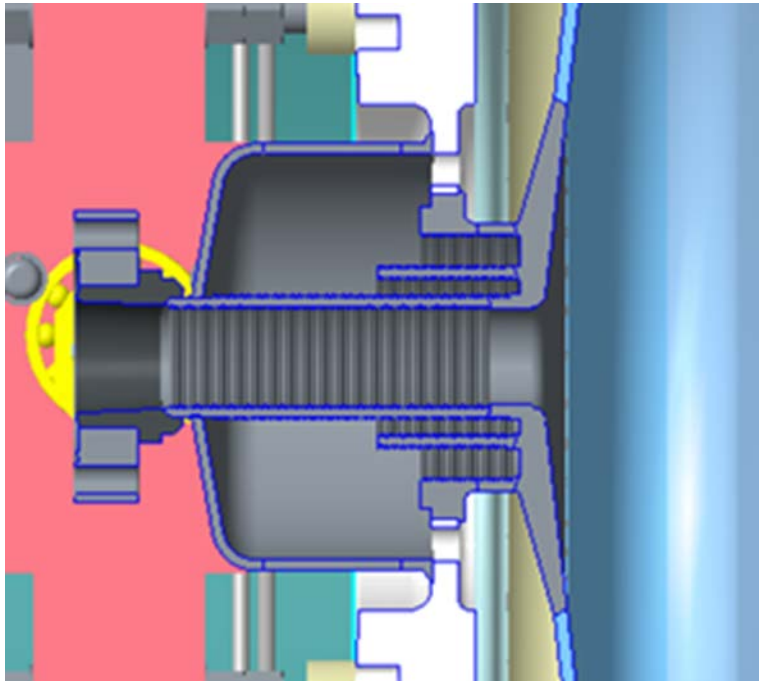

- Mass of the Niobium choke area cylinder: 0.25 kg.
- Volume of the liquid helium in the end bell: 0.54 Liter. Helium mass of 0.079 kg.
- Detailed calculations of the process of heating up the niobium choke and surrounding liquid helium give a conservative estimate of **250 us** for the time required to start vaporizing helium.

We conclude that **the SRF quench protection is an adequate protection against a "catastrophic" beam loss**.

Wrong power beam hits in-vacuum surface

- Wrong power beam is deposited on a surface it is not supposed to hit
  - YAGs, Vacuum Valves, Halo Monitors and Emittance Slits can accept low current beam (N_b = 30, N_{mb} = 1, T = 1 s, Q_b=200 pC) with one Hz rate.
    - Controls: if any of these devices are inserted when beam has wrong power the MPS shall stop the beam within 20 us.
  - 10 kW dump:
    - Monitor the respective bending magnet and stop the beam if the beam with wrong power is sent to the 10 kW dump.
  - Vacuum Chamber:
    - Administrative controls – always start by establishing beam trajectory and focusing in LCM
    - Interlock BPMs upstream of, inside and downstream of the merger
    - Detect beam losses with strategically located BLMs and probably with the differential FCT measurements

MPS Diagnostics

- BLMs – for fast loss detection (reaction time is a few us)
- FCTs – for measuring beam current and for fast loss detection (reaction time is a few us)
- Monitoring BPMs – to control beam trajectory (reaction time is ~12 us)
- Monitoring magnets to control beam trajectory and focusing

- MPS interlocks the machine by blocking the photocathode laser beam

FCT signal processing scheme (I)

- MPS shall quickly (within microseconds) detect the unsafe conditions
- We use FCT to measure <u>instantaneous beam current</u>
- What we want to have is <u>the instantaneous measurement of an average beam current</u>
- In other words, ideally we want to know that the average current level has changed at the moment it has changed.
- Some processing scheme is required before FCT signal is used to define the current level, which is transferred to the MPS controller.

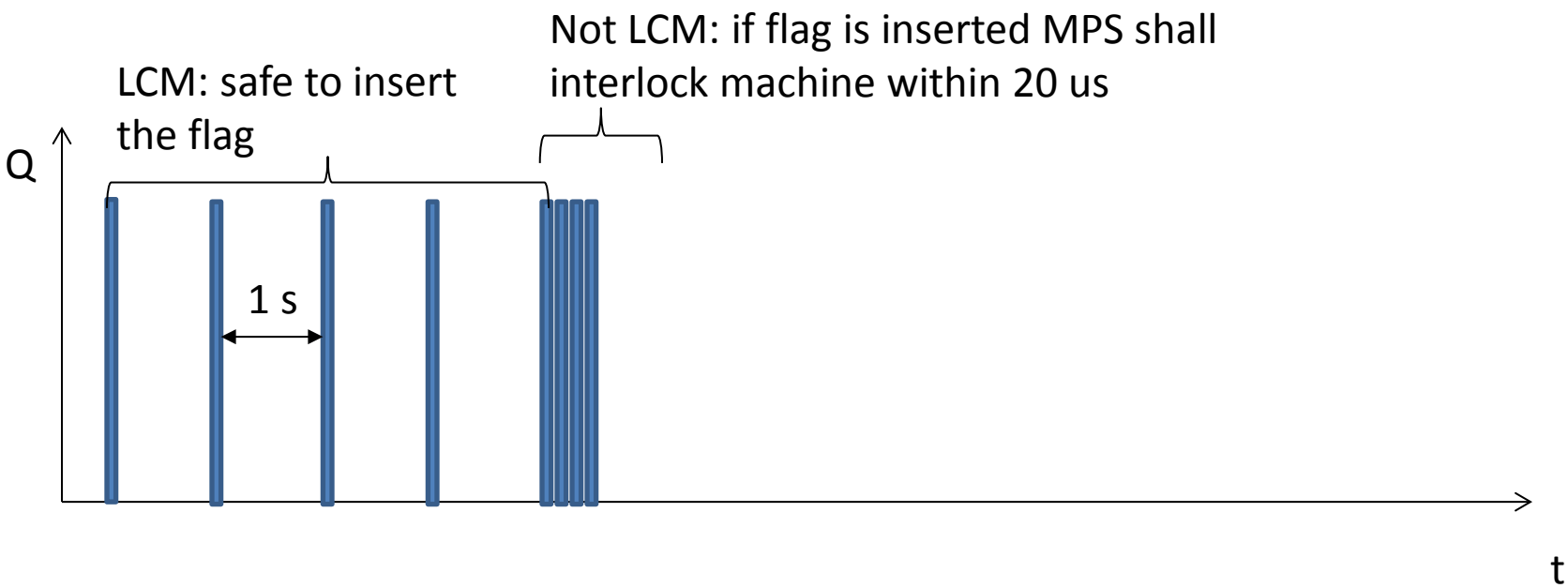

FCT signal processing scheme (II)

- Measure total charge accumulated in the moving window of some length T.
- This charge will be defining our “beam modes”
- The window of length T <u>overestimates</u> average current for repetition rate < 1/T. We suggest T=5 s (the longest expected period in all of our beam modes).

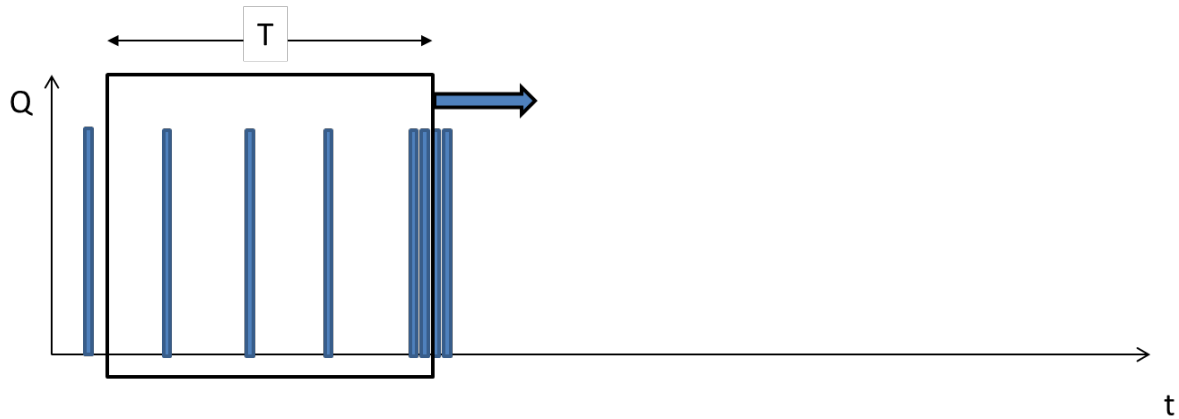

Beam mode	Machine mode	Q accumulated in 5 s long moving window
LCM	flags, vacuum valves, faraday cups, etc.	125 nC
RFSM	RF line flag and dump	13.6 uC
	10 kW dump	19 mC
TM, HCM	140 kW dump	273 mC

Concept of MPS Logic

- MPS works with Machine Modes (MM)
- MM is defined by where the beam is supposed to land
- Each MM has the safe power limit (SPL) associated with it
- Actual beam power (ABP) is calculated from FCT readings and the highest possible beam energy
- If ABP>SPL then the beam is stopped
- For example operator works in RFSM:
  - If gun diagnostic bend and first merger bend are “off” while RF diagnostic bend is “on” and RF YAG is inserted then MPS decides that it is working in respective MM.
  - The SPL for this MM is 7.1 W
  - If operator runs (with 0.2 Hz) 2.6 MeV beam with 200 pC/bunch and exceeds the allowed length of the macro-bunch train (250 us) by 50 us then ABP becomes 8.5 W and MPS stops the beam.

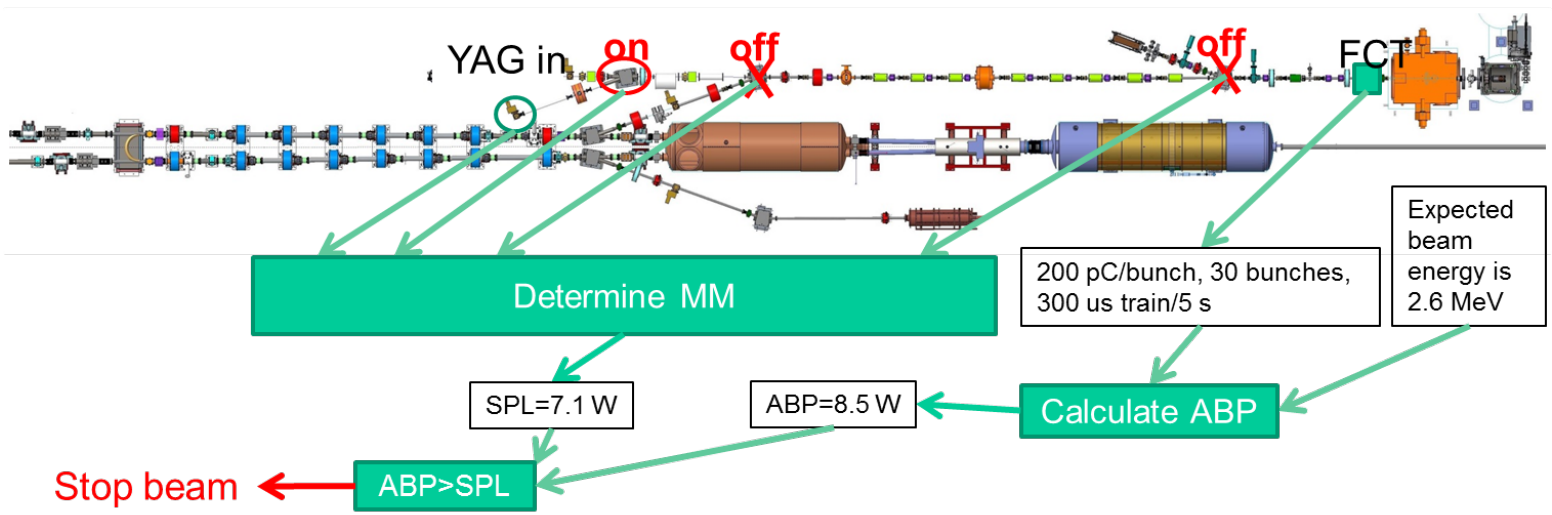

Concept of MPS–Laser Interface

- The MPS is interlocking the machine by closing the laser Pockels cell and shutting the mechanical shutter

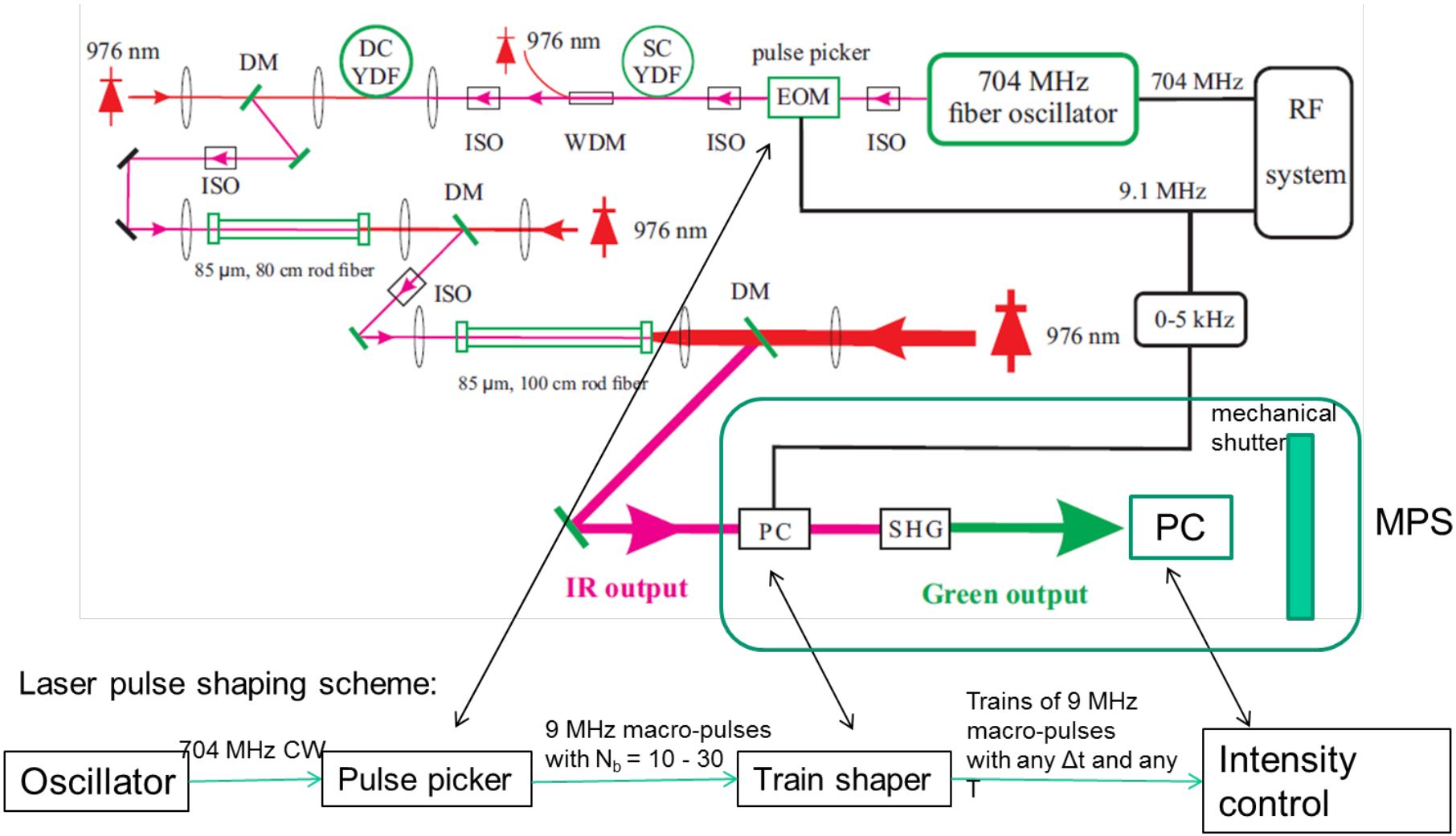

Gun Test run in 2017

- February –June 2017 we will be testing our gun with a short beamline.
- The beam energy will be 400 keV.
- The maximum allowed beam power will be 10 kW.
- For the fist half of this run we will be able to operate machine only in the pulsed mode.

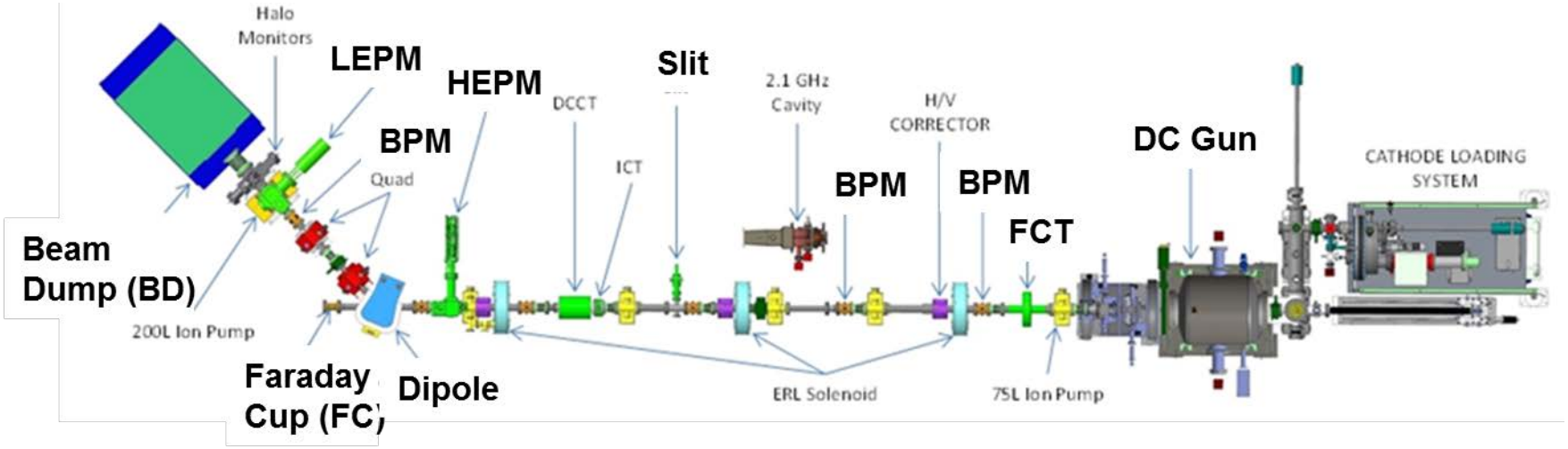

MPS Logic

Complete fast MPS logic for 2017 run (gun test)

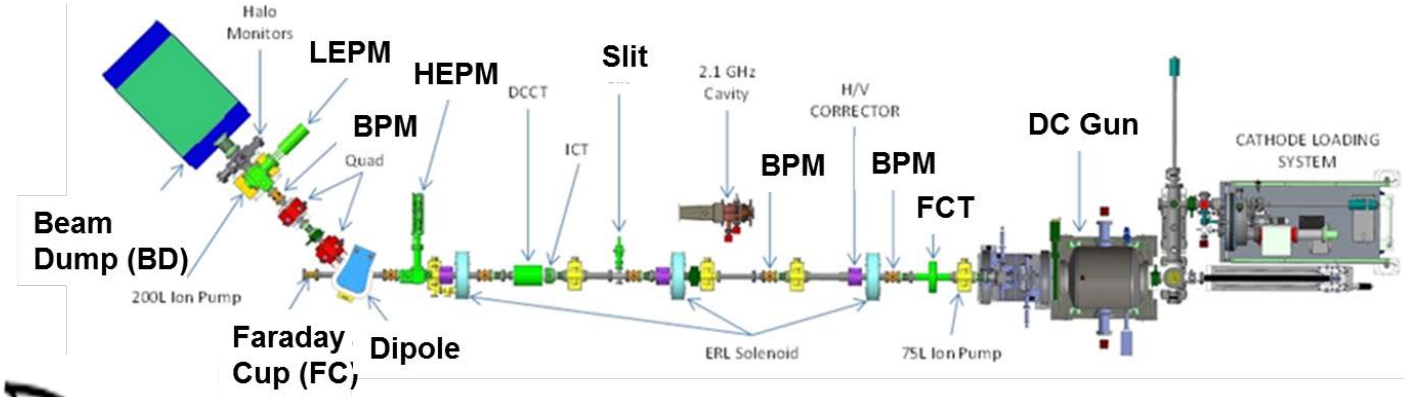

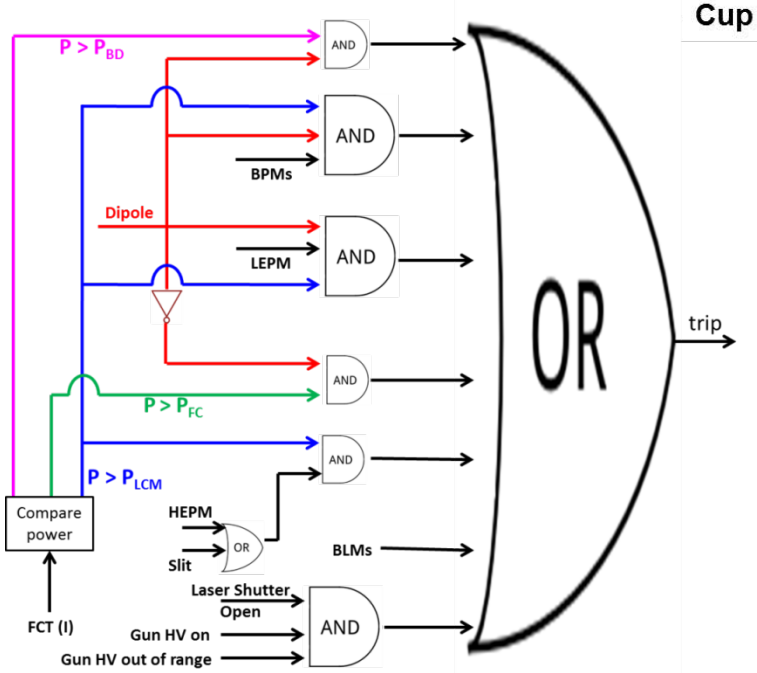

	0	1
Dipole	Off	On
BPMs	In range	Not in range
LEPM	Out	In
HEPM	Out	In
Slit	Out	In
BLMs	Losses are below limit	Losses are above limit

MPS Logic flowchart (I)

- Beam level detection:

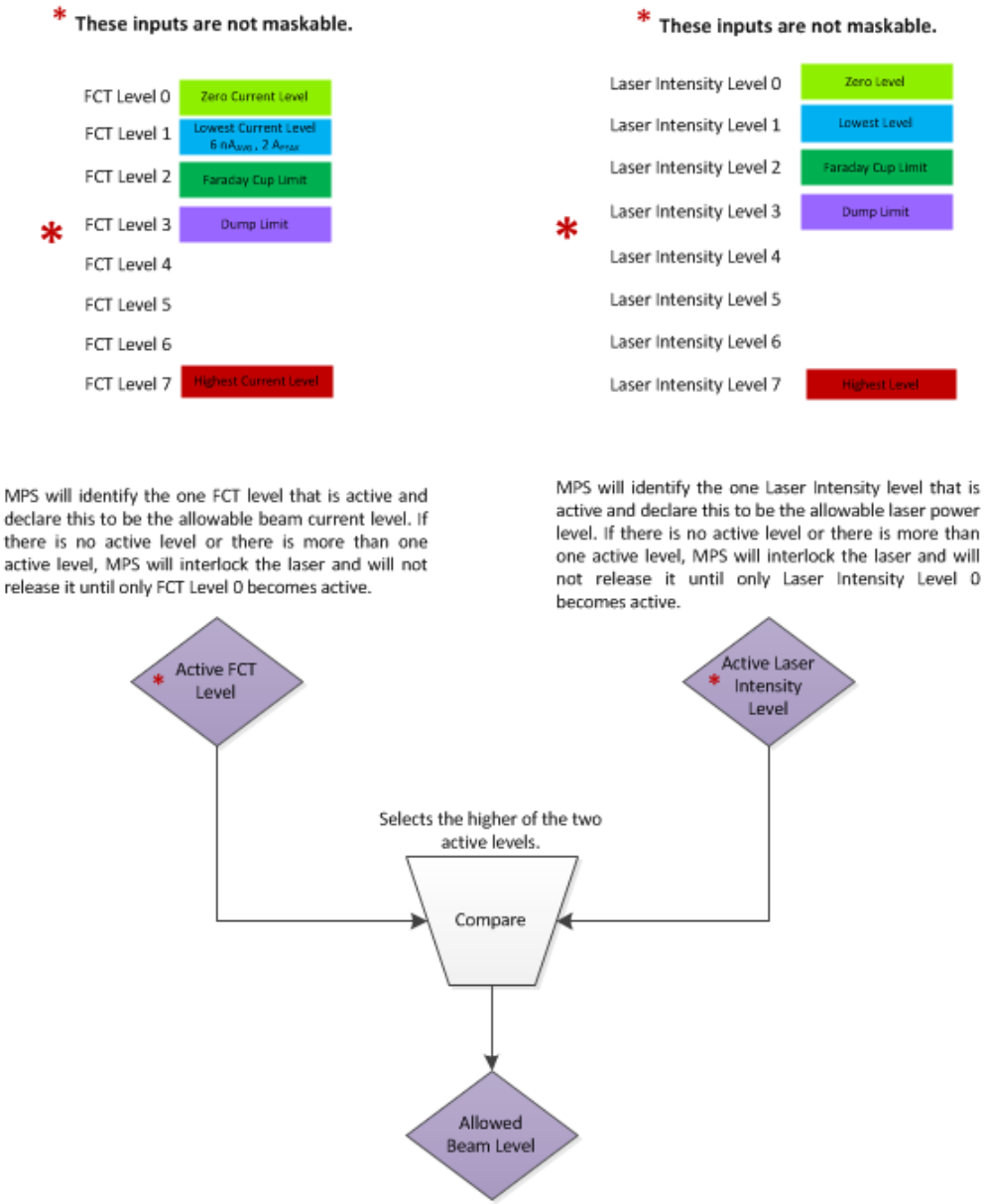

MPS Logic flowchart (II)

- Isolation mode and laser alignment mode:

All laser interlocks (except the 'no FCT/laser level' interlock) will be enforced for 1 second. After this period, when the user issues an MPS reset, the slow shutter and the pockels cell will be opened to generate beam. If the interlock condition persists and/or a new fault occurs then a laser interlock will be issued again.

If no FCT or Laser Intensity level is detected, laser will be interlocked and will remain interlocked until a level is detected.

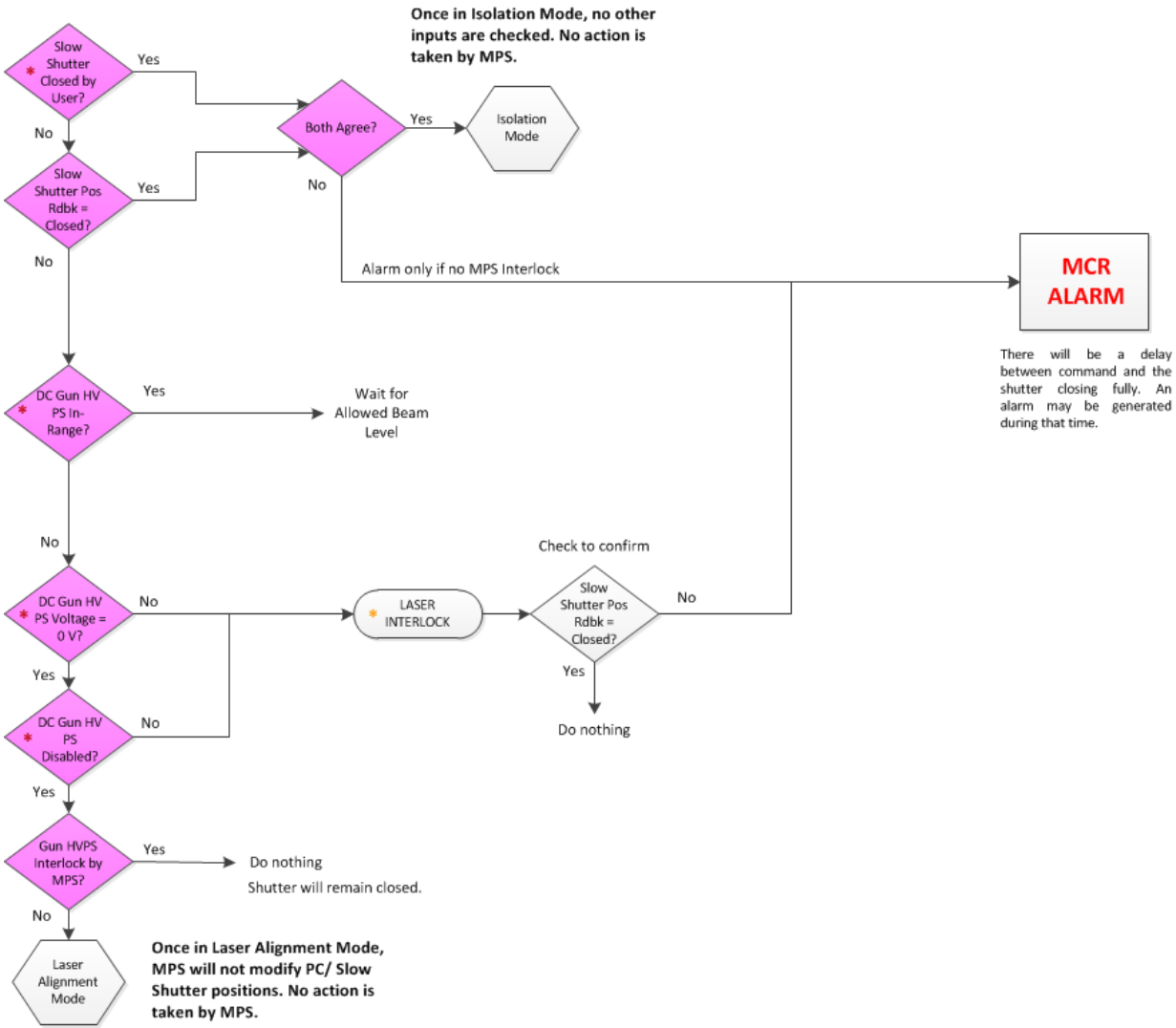

MPS Logic flowchart (III)

- Three beam modes:

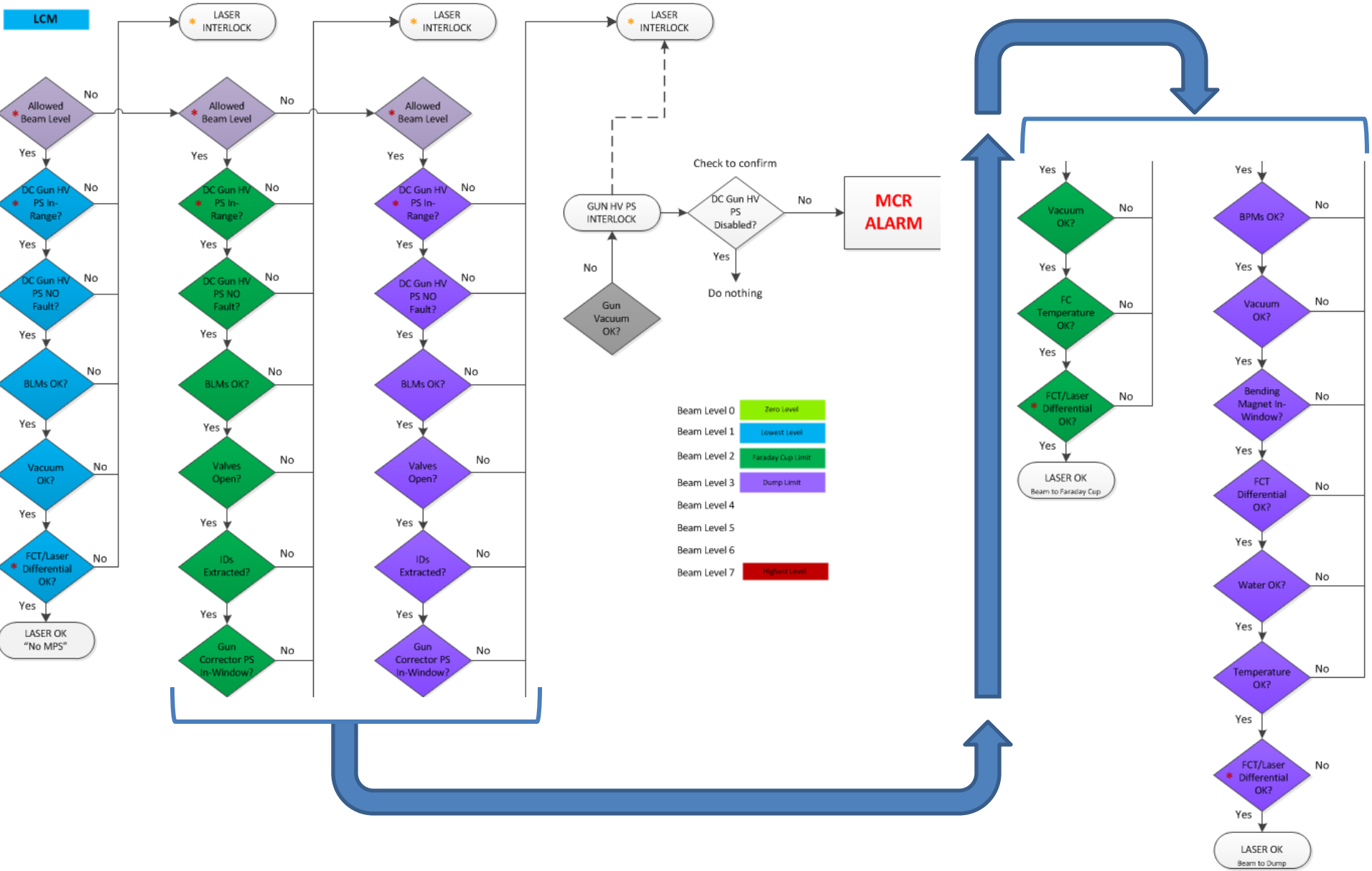

MPS - Laser interface

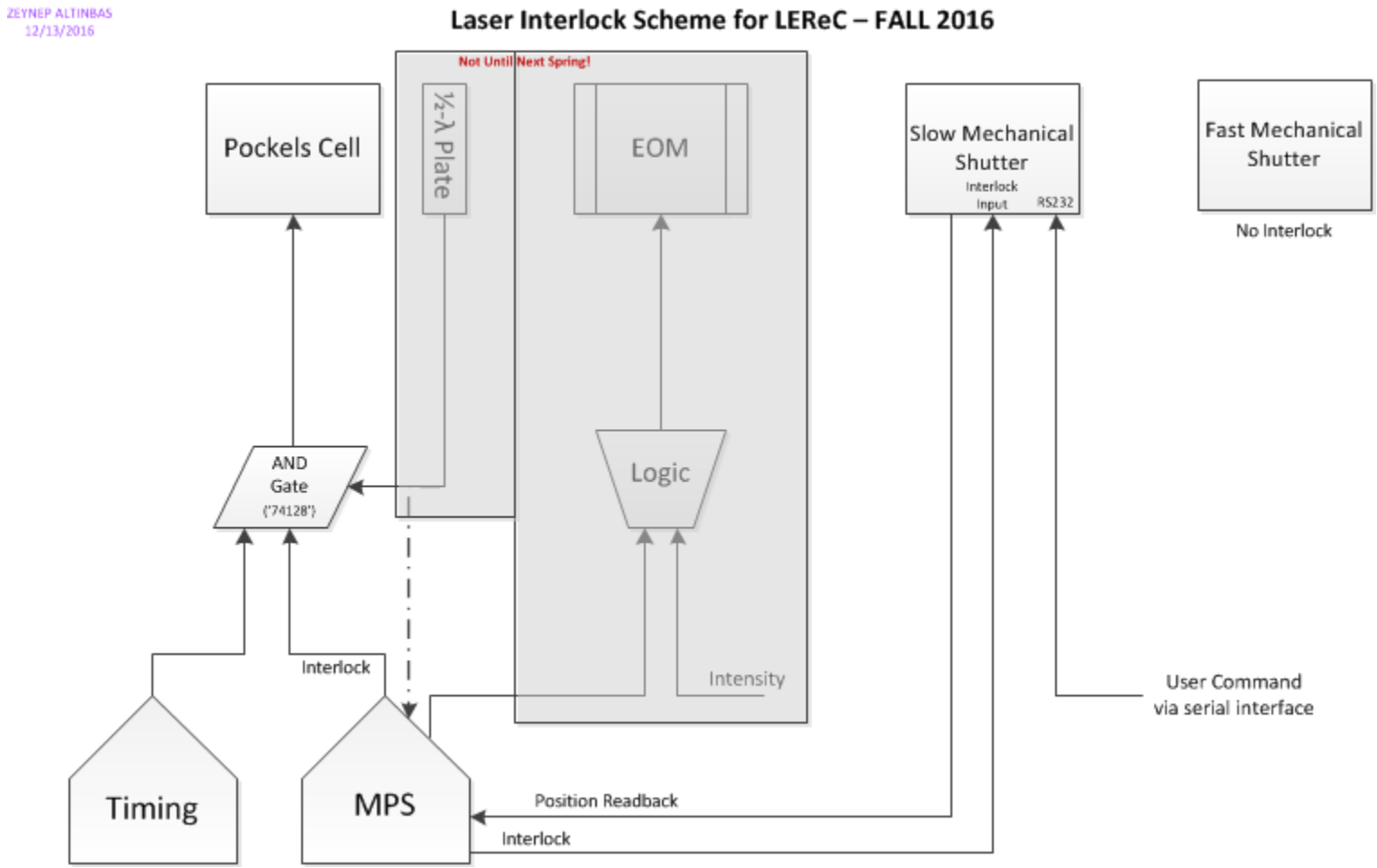

Current status

- Programming the controller for the MPS designed for 2017 run (gun test) is underway.
- The building of the timing system (defines beam modes) is in progress.
- Tests of various BLMs with e-beam will be performed at the start of the test.
- Test of FCTs on a test-bench are planned for the end of December.

Thank you!