Meeting Minutes 12/12/16

A. Fedotov, S. Seletskiy. D. Kayran, J. Kewisch, D. Gassner, K. Hamdi, G. Mahler, D. Bruno, M. Mapes, D. Weiss, T. Miller, S.V. Badea, V. deMonte

First 2017 installation cooling section installation meeting.

1. Slide 3 "180° dipole Magnet 12/2016" shows the revised layout location for the high field matching solenoid and the first compensating solenoid in the blue cooling section. This is different from what was original designed and installed in 2015. Both solenoid magnets and stand will have to be moved at the beginning of the 2017 shutdown and the beam tubes will have to be shortened or changed.
2. George noted that the 180 magnet is in receiving. It will be sent to 902 for magnetic measurement. Sergei noted that hall probe measurements of the aperture are required to verify the dipole field throughout the electron beam path. Some discussion whether to use the magnet division probe or the new hall probe for the magnet. Toby reports the new probe is due in middle or late January.
3. Discussion on the hall probe electronics in the tunnel. Toby will look for a home for the electronics in the tunnel either along the wall or under the beam line and feed that back to Karem. Karem designed the bracket to hold the probe and revised the stand for the magnet and vacuum chamber.
4. Slide 3 George has stored the NSLSI compensating dipole magnets in the "pit" in 919B. It was agreed that those magnets do not need to be measured because they have a very small effect on the heavy ion beam. The drawings and some pictures are under Tuozzolo in desexh.
5. Slides 6 and 7 are for the 3 each quadrupole correctors: 2 for the 180 dipole (slide 3) and 1 for the 20 dipole at the start of the yellow cooling section (slide 8). Karem will do the detail design for that corrector.
6. There are 2 air core dipole horz./vert. correctors (dipole/skew dipole correctors). 1 for the 180 dipole (slide 3) and 1 for the 20 dipole at the start of the yellow cooling section (slide 8). The design is a larger aperture version of the air core correctors being developed for the transport line. Need a detailed magnetic design for Karem (Holger Witte?) to develop the detailed design.
7. The solenoid power supplies were discussed. The original specification was modified months ago from series supplies to individual supplies for each solenoid. After the meeting Don emailed the power supply specifications to the physics group to confirm before he orders them.
8. The magnetic shielding was discussed: Noted also that Viorel Badea will take over responsibility for ordering the production mu metal sections. Vito DeMonte is responsible for fabrication drawings. Sergey is the responsible physicist/engineer. Order will be for a first article that will be tested and approved with a costed option to procure the rest needed.
9. The magnetic shielding was discussed: Vito's model for the shielding was added to this presentation. It should be noted that the outer shield model needs to be updated. It shows holes in the shielding for the BPM field through cables. Present plan is for using a right angle cable termination that will be under the mu metal and a 1 inch gap between the mu metal and the solenoid magnet for the cable to pass between (no hole in the mu metal). The model will be updated. Sergey, Vito, George, Viorel
10. The magnetic shielding was discussed: Extended discussion on bakeout blanket installation and removal. It was proposed that the bakeout blankets be installed over the inner shield "permanently". Concern that the 200C bakeout will affect the mu metals.
11. The magnetic shielding was discussed: Reminder that in tunnel measurements of the installed shielding needs to be done with a hall proble. Boundary condition for this test includes keeping the RHIC beam pipe.
12. Beam diagnostics: The standard profile monitor parts for 4 units are in hand, one unit has been assembled and tested. The rest will be assembled and tested in the winter after RHIC start-up. Toby, Dan
13. Beam diagnostics: The standard slit parts for 2 units are in hand hand – some may still be in the shops, one unit has been assembled and tested. The other will be assembled and tested in the winter after RHIC start-up. Toby, Dan
14. Beam diagnostics: The hybrid profile monitor/BPM/slit parts for 2 units are being fabricated in Central Shops. They will be assembled and tested in the winter after RHIC start-up. Toby, Dan
15. Discussion on transport line components external to the cooling section. On the dump side, discussion on the quadrupoles needed: George noted that he may have quads from NSLS1, Charles Folz got the specifications for the MIT quads for ATFII – there should be extras, and ERL quads shimmed may work as well. Alexei provided specifications after the meeting and Dmitry looked at some alternatives.
16. Discussion on transport line profile monitors. Noted that the profile monitor in the merger line before the cooling section should be a new design for low impedance rather than an upgraded ERL PM . Toby will evaluate approach.

LEReC 12/2016

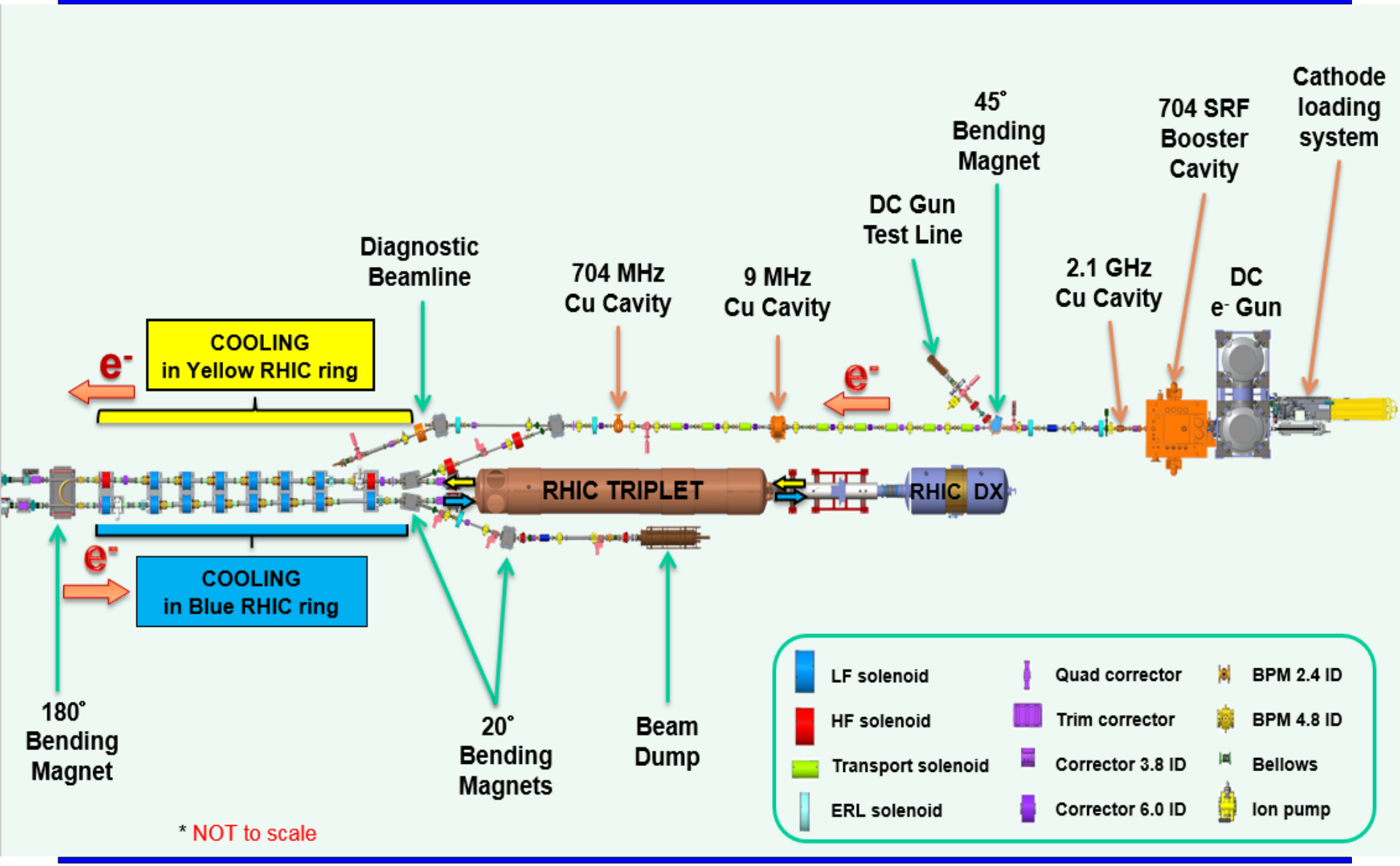

180º Dipole Magnet 12/2016

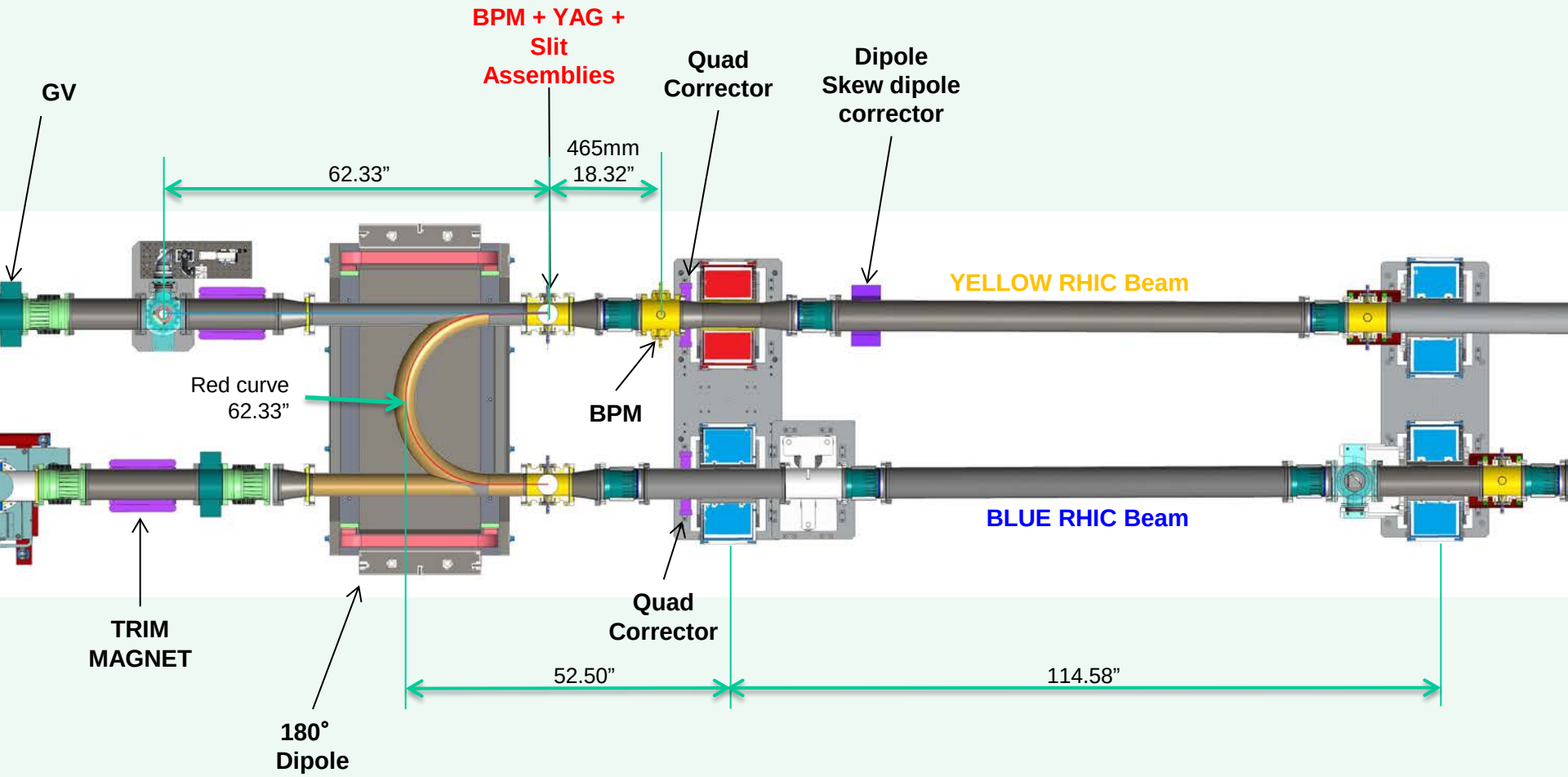

180º Dipole Magnet 12/2016

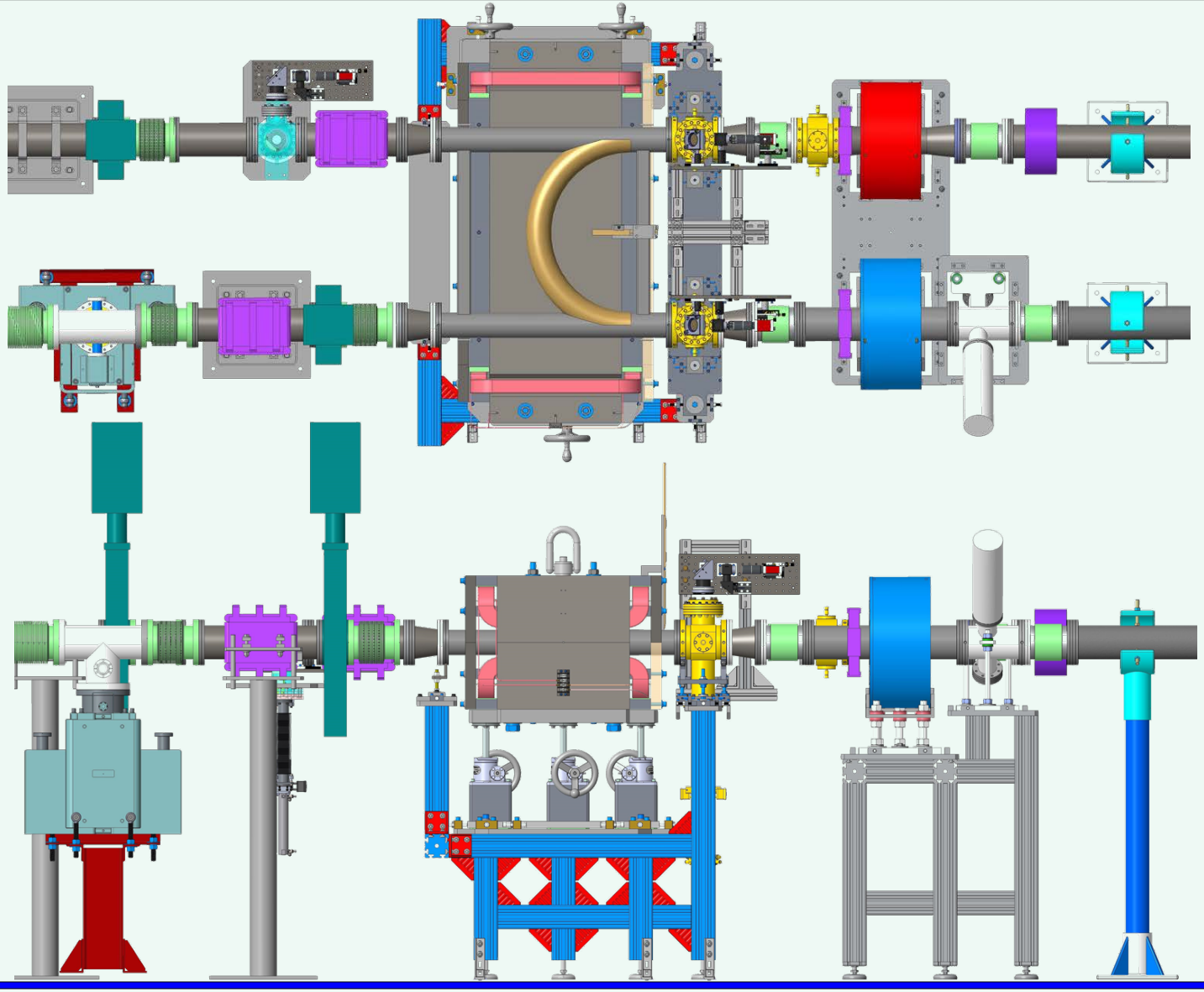

180º Dipole Magnet Stand

Dipole= 6,500 LBS
Stand= 750 LBS

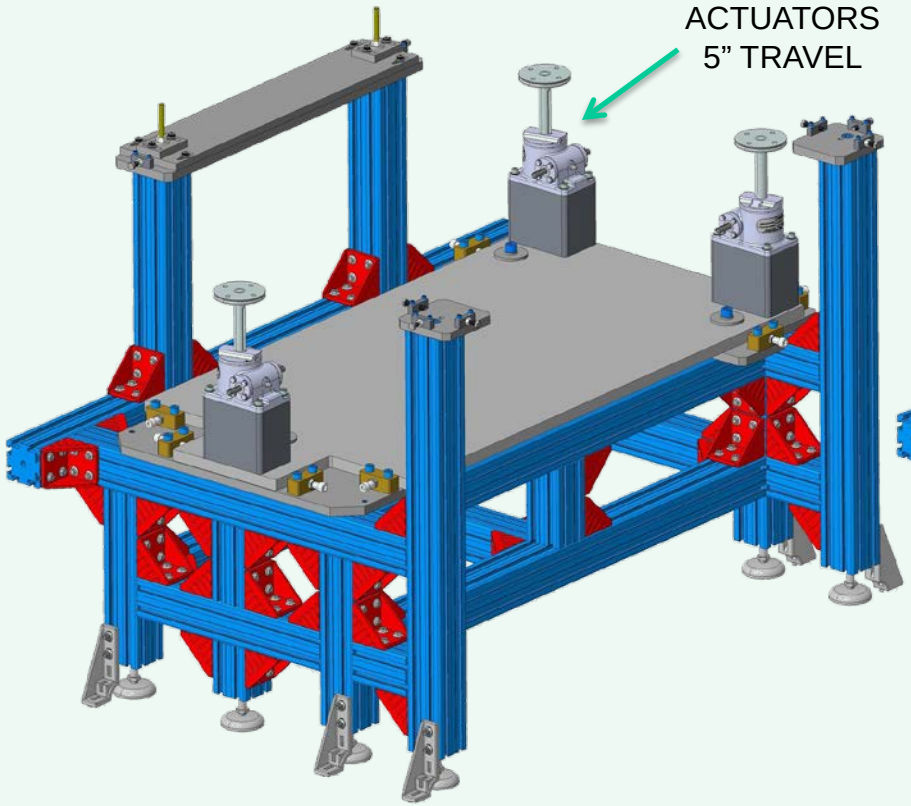

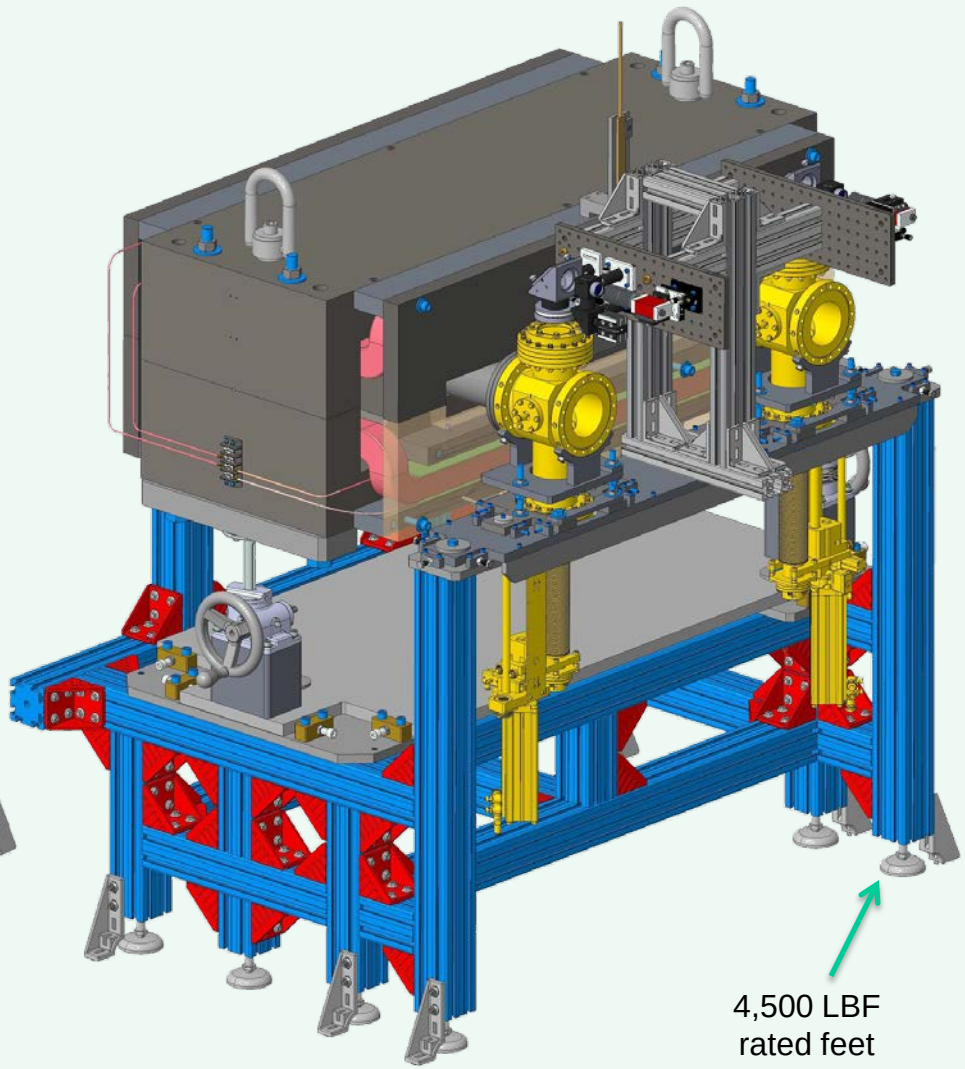

Modified Small Quadrupole near 180° Dipole (new numbers are in Red)

Each Coil Must be Mounted at
Center of Each Side

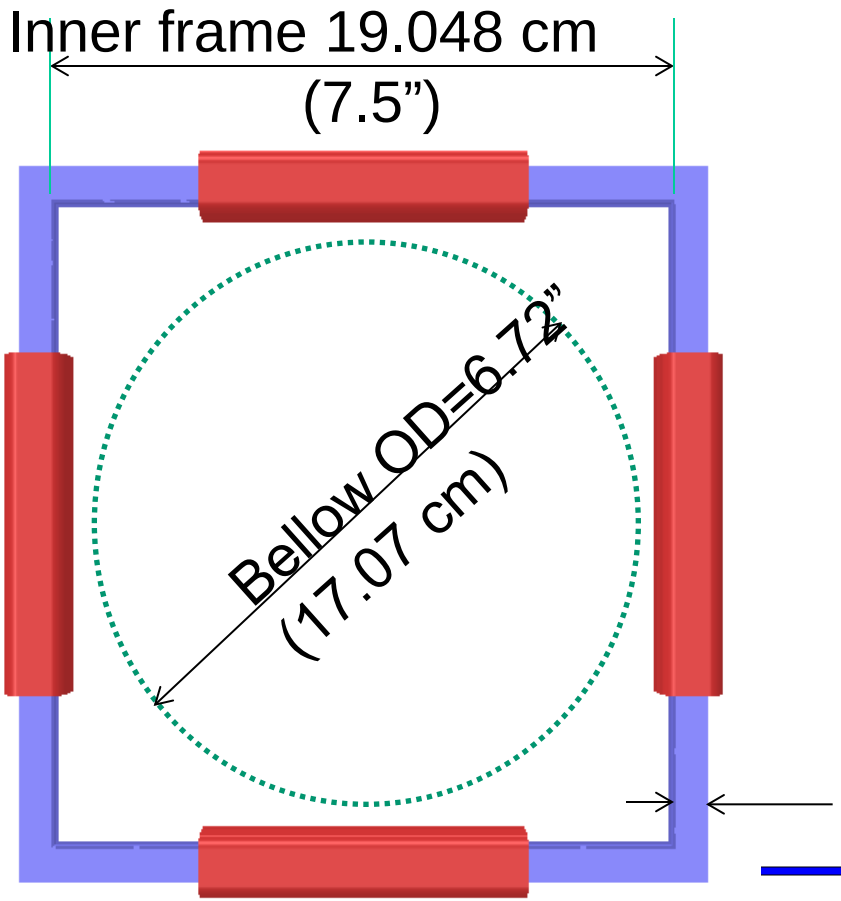

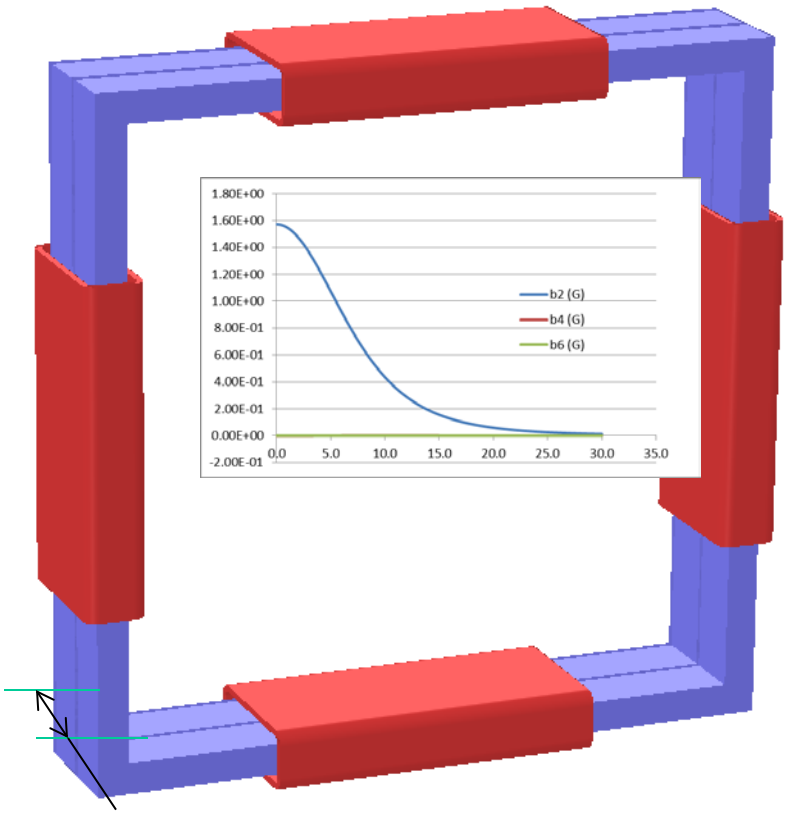

Steel core length = 4 cm (along beam)

Steel core thickness = 0.953 cm (3/8”)

210 A-turn per coil

Cross-section of Current Flow: 0.3 x10 cm

Overall J = 70 A/cm^2

(Arrows Show Current Flows/Winding Directions)

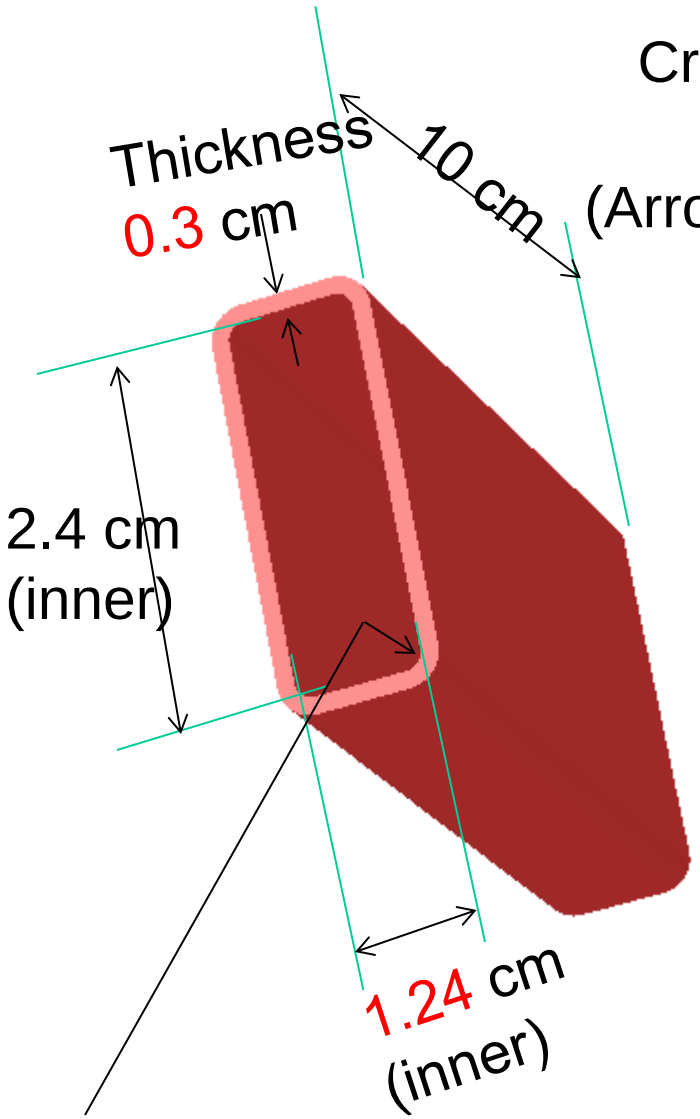

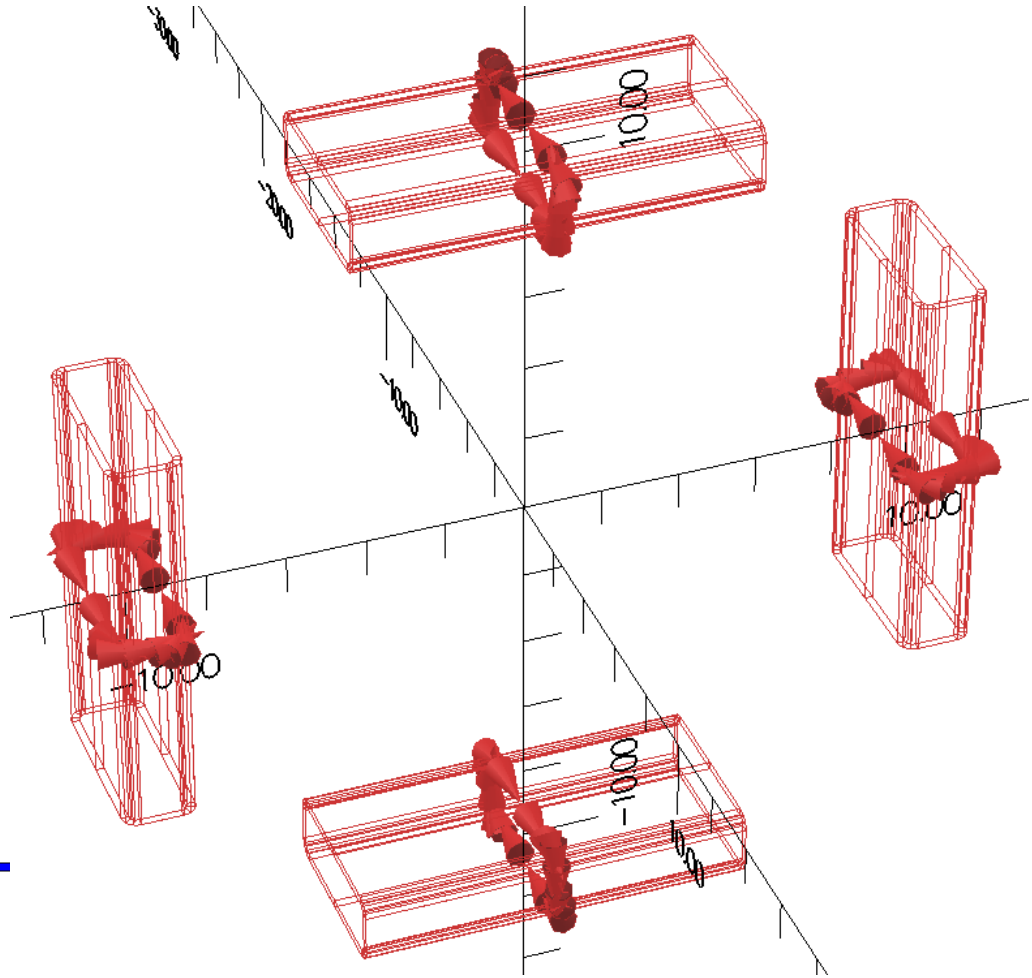

Coil Inner Corner Ri = 0.2 cm

20º Dipoles

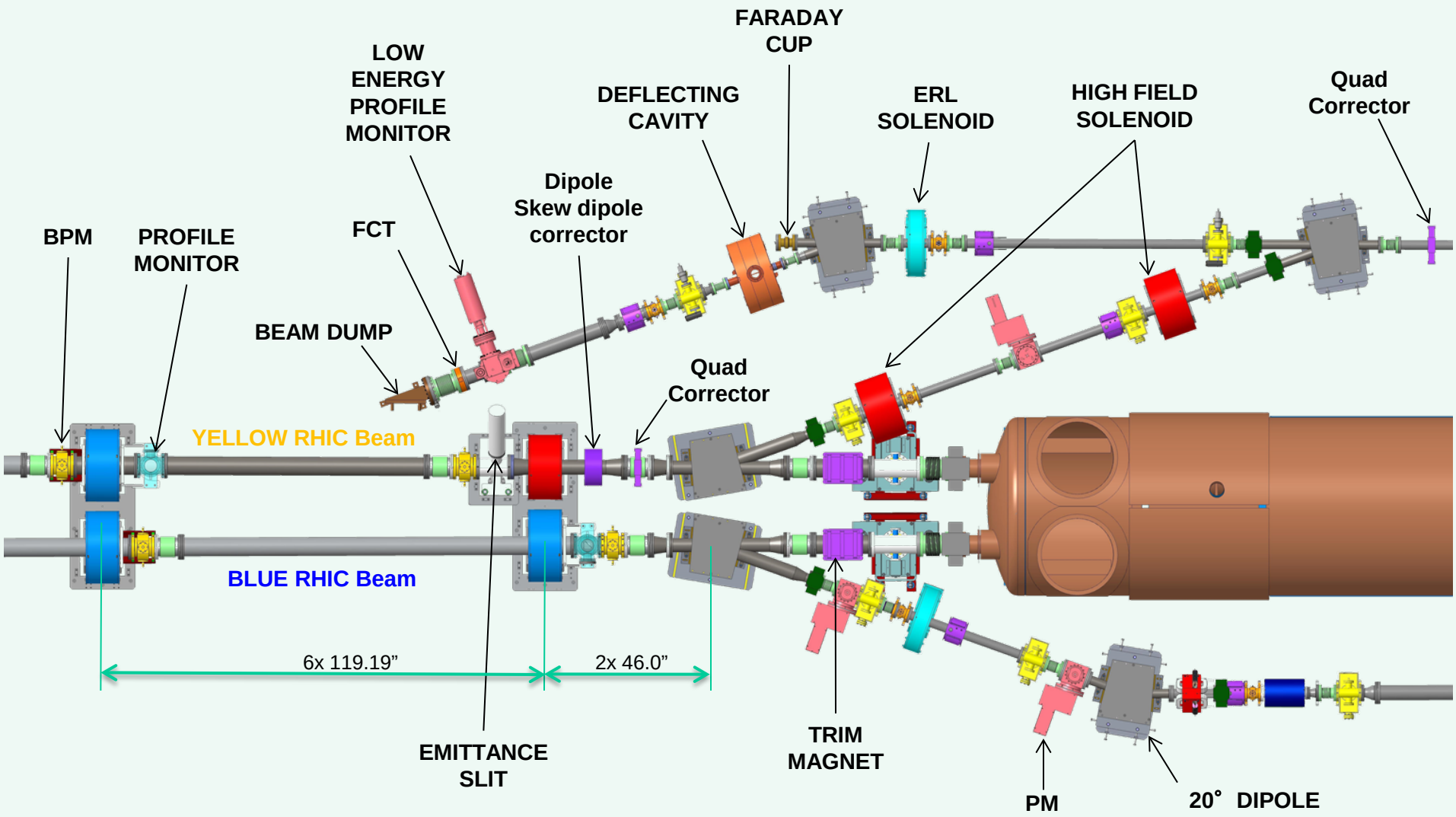
FARADAY CUP
LOW ENERGY PROFILE MONITOR
DEFLECTING CAVITY
ERL SOLENOID
HIGH FIELD SOLENOID
Quad Corrector
Dipole Skew dipole corrector
FCT
BPM
PROFILE MONITOR
BEAM DUMP
Quad Corrector
YELLOW RHIC Beam
BLUE RHIC Beam
6x 119.19”
2x 46.0”
EMITTANCE SLIT
TRIM MAGNET
PM
20° DIPOLE

Cooling Section *Standard* Profile Monitors

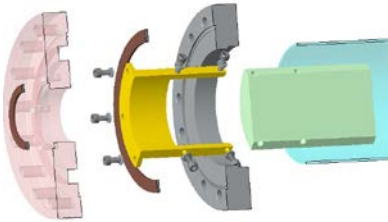

Assembled and Ready for Installation.

4ea 5” chamber units needed for cooling section.

How many units available?

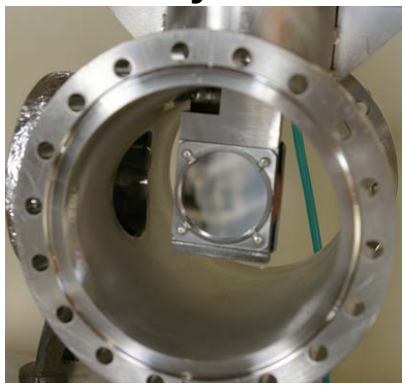

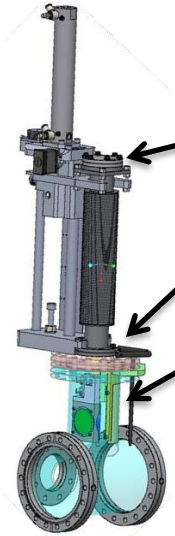

Stage Assembly
(Linear Feedthrough)

Zero Length adapter flange

Profile Monitor

YAG Screen Assy.

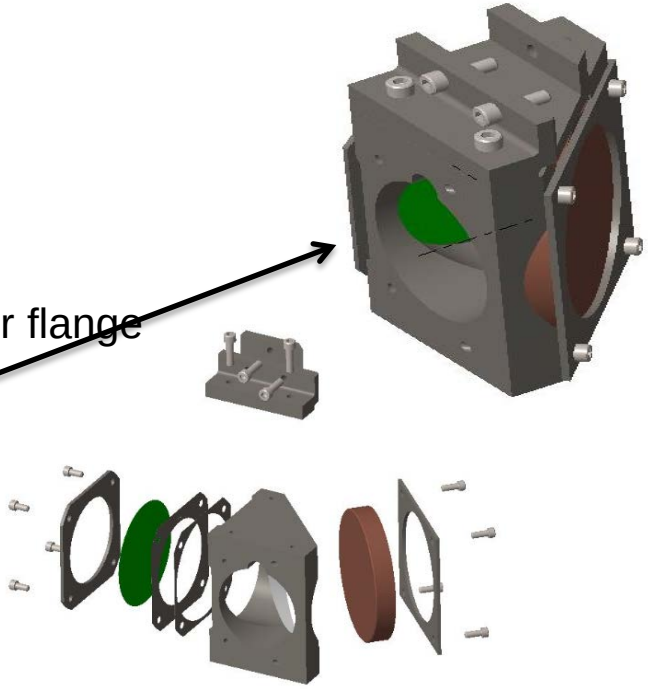

Cooling Section Emittance Slits

Assembled and Ready for Installation.

2ea 5” chamber units needed for cooling section.

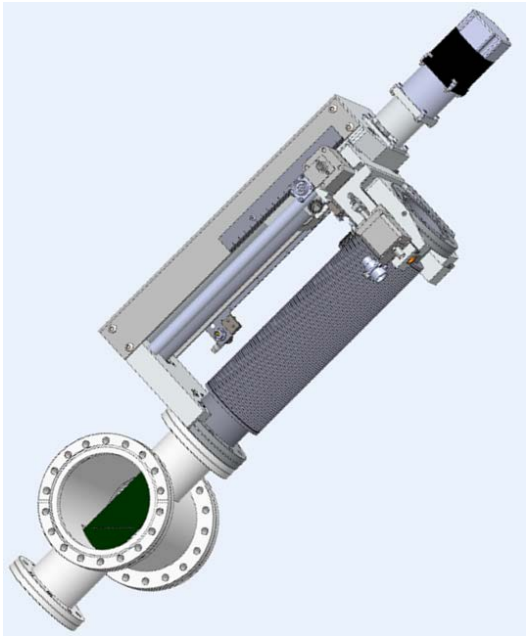

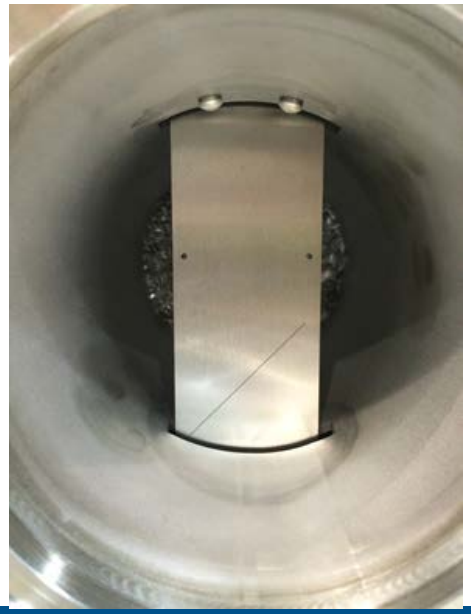

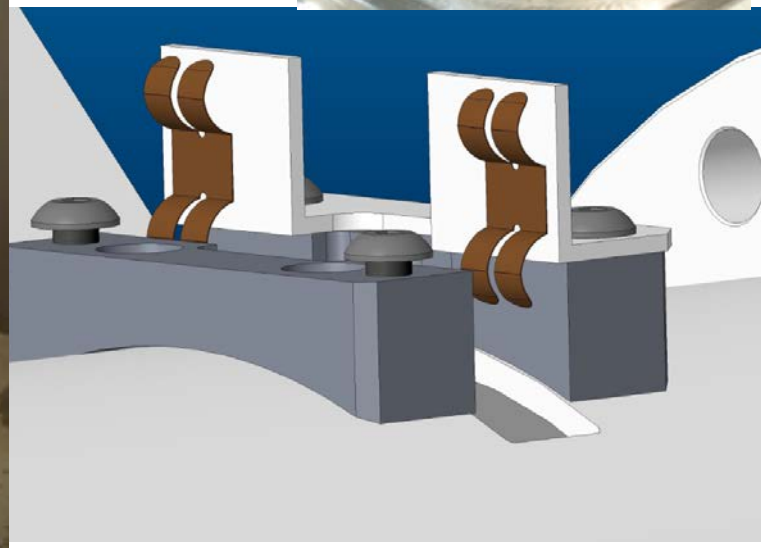

Cooling Section “hybrid” BPM, PM, Slit

Parts in shops, on hold for higher priority stuff

Ferrite, slits, yags in hand?

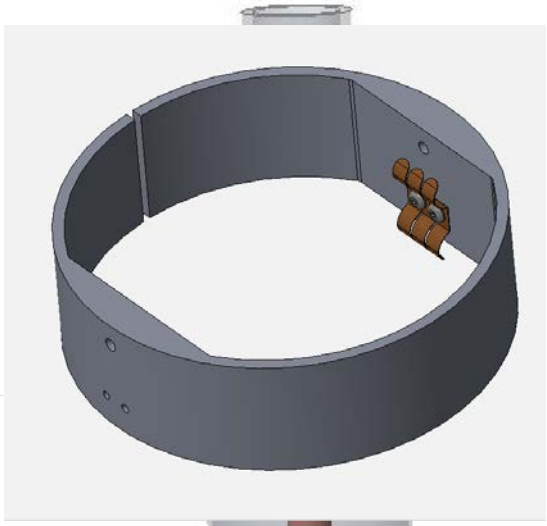

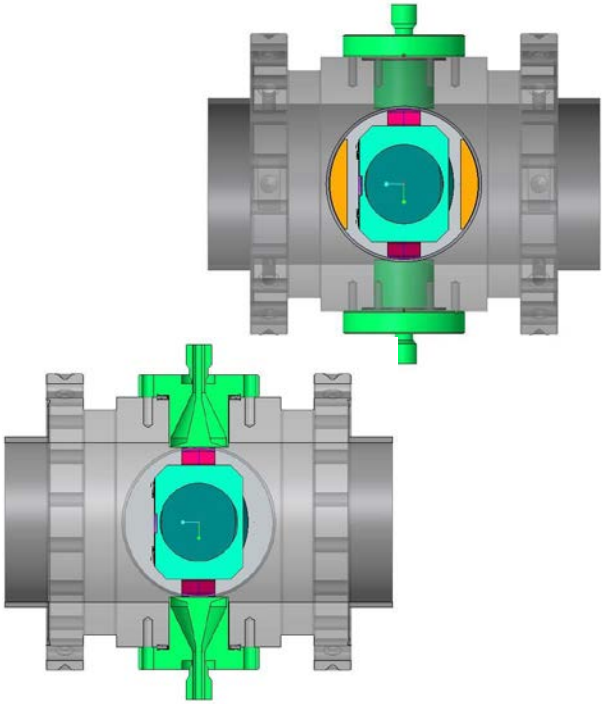

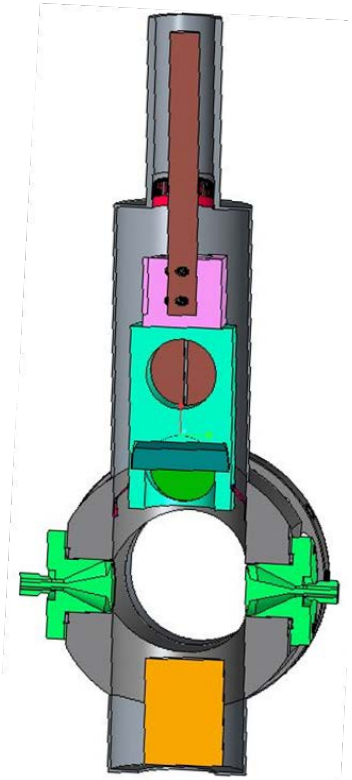

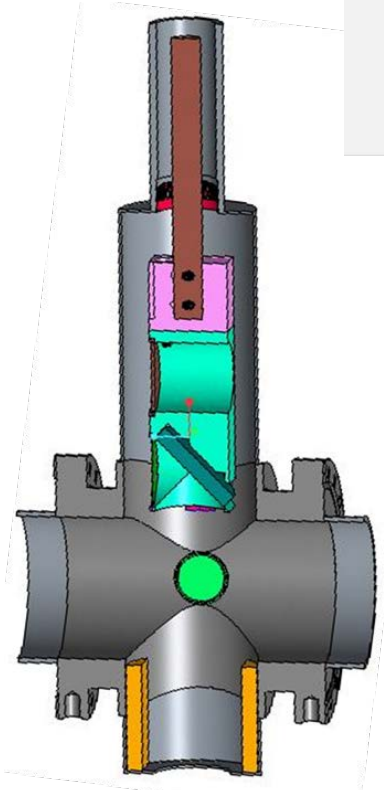

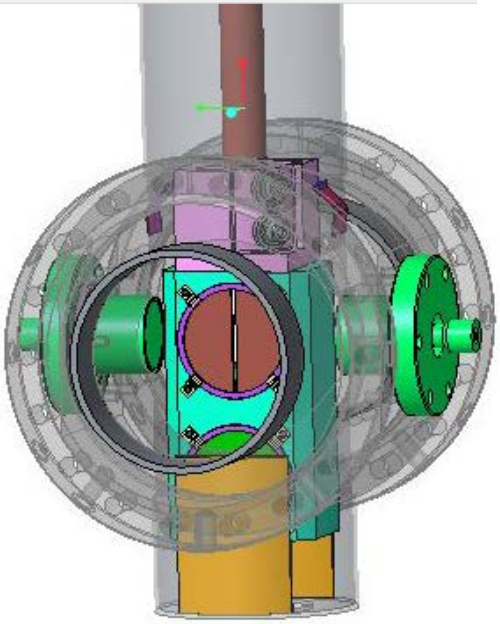

20° Dipole Magnet

Four magnets delivered & measured, 2 installed

Need laminated magnet design and order.

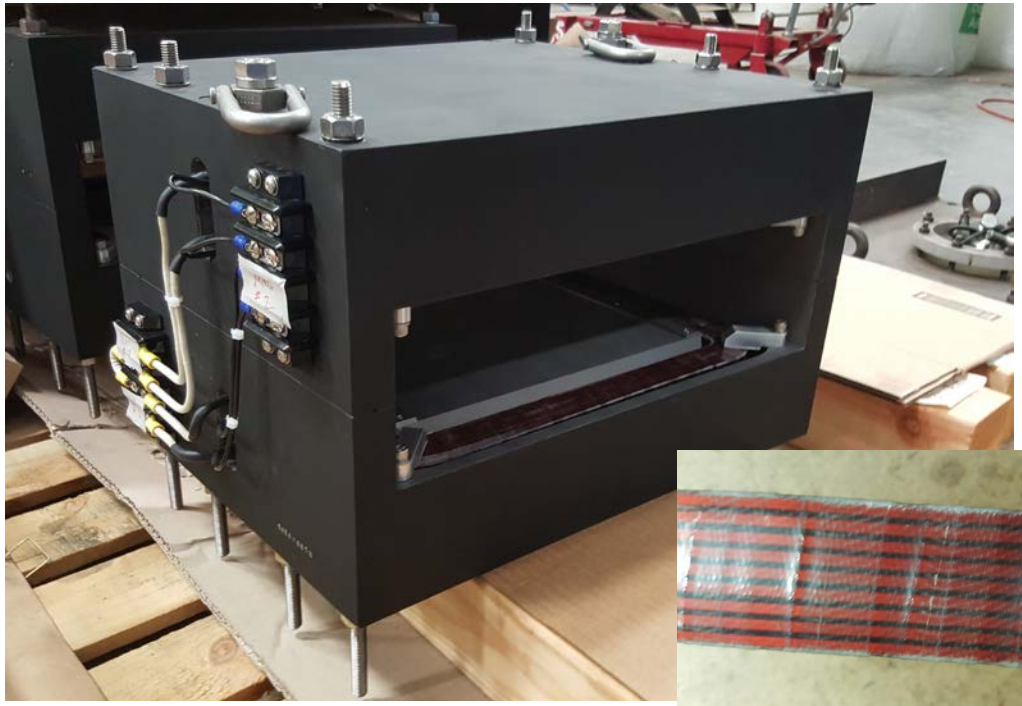

Electron tracking results and field qualities along trajectory on R=1 cm curved cylinder:

	Ek = 5 MeV	Ek = 1.6 MeV
Current per coil (Amp-turn)	1053.288	393.192
Overall current density (A/mm²) (overall coil cross-section 3.0x4.8 cm)	0.73145	0.27305
Central Gap Field (Gauss)	251.20	93.73
Half b1-integral (dipole) (G-cm)	3.1982E3	1.1930E3
Half b3-integral (6-pole) (G-cm) [Ratio to dipole integral]	1.803E-2 [5.64E-6]	7.019E-3 [5.88E-6]
Half bending angle from tracking tests (required 10°)	10.013°	10.006°

Extra slides

LEReC layout 12/2015

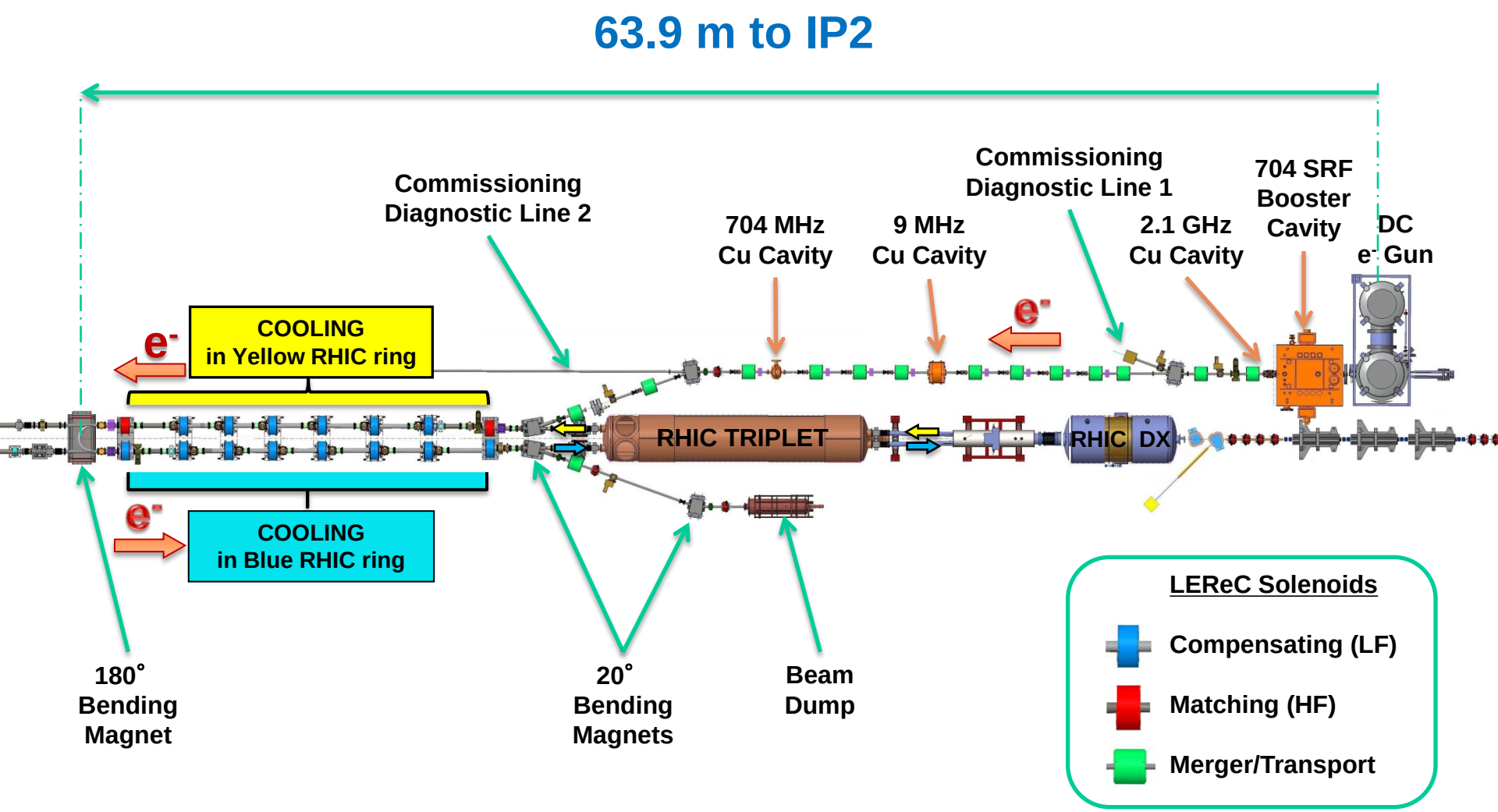

180º Dipole Magnet Neighborhood 12/2015

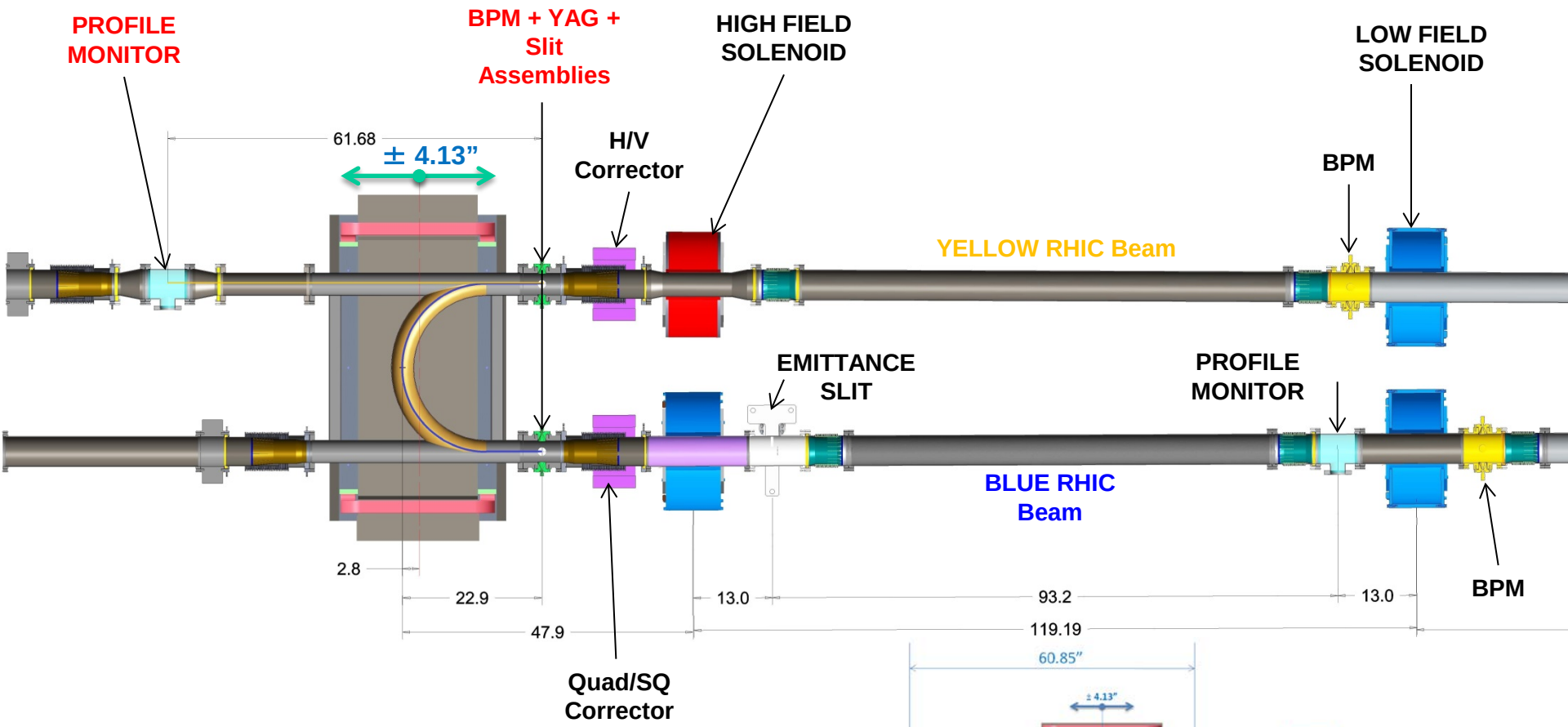

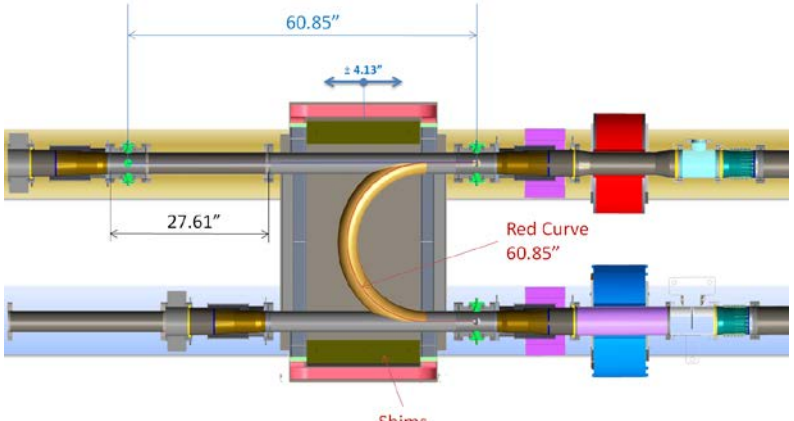

kh

180º Dipole Magnet Neighborhood 12/2015

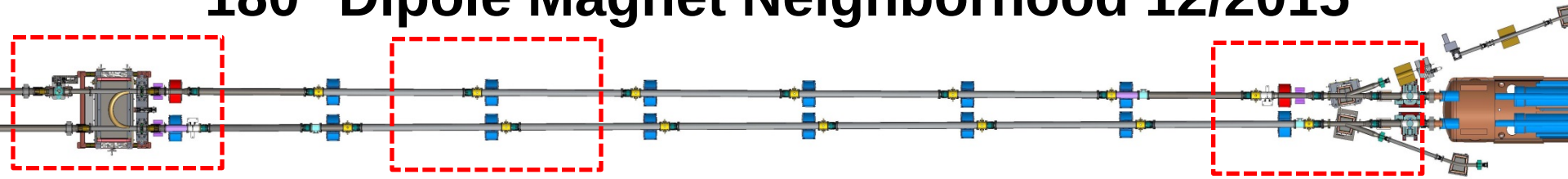

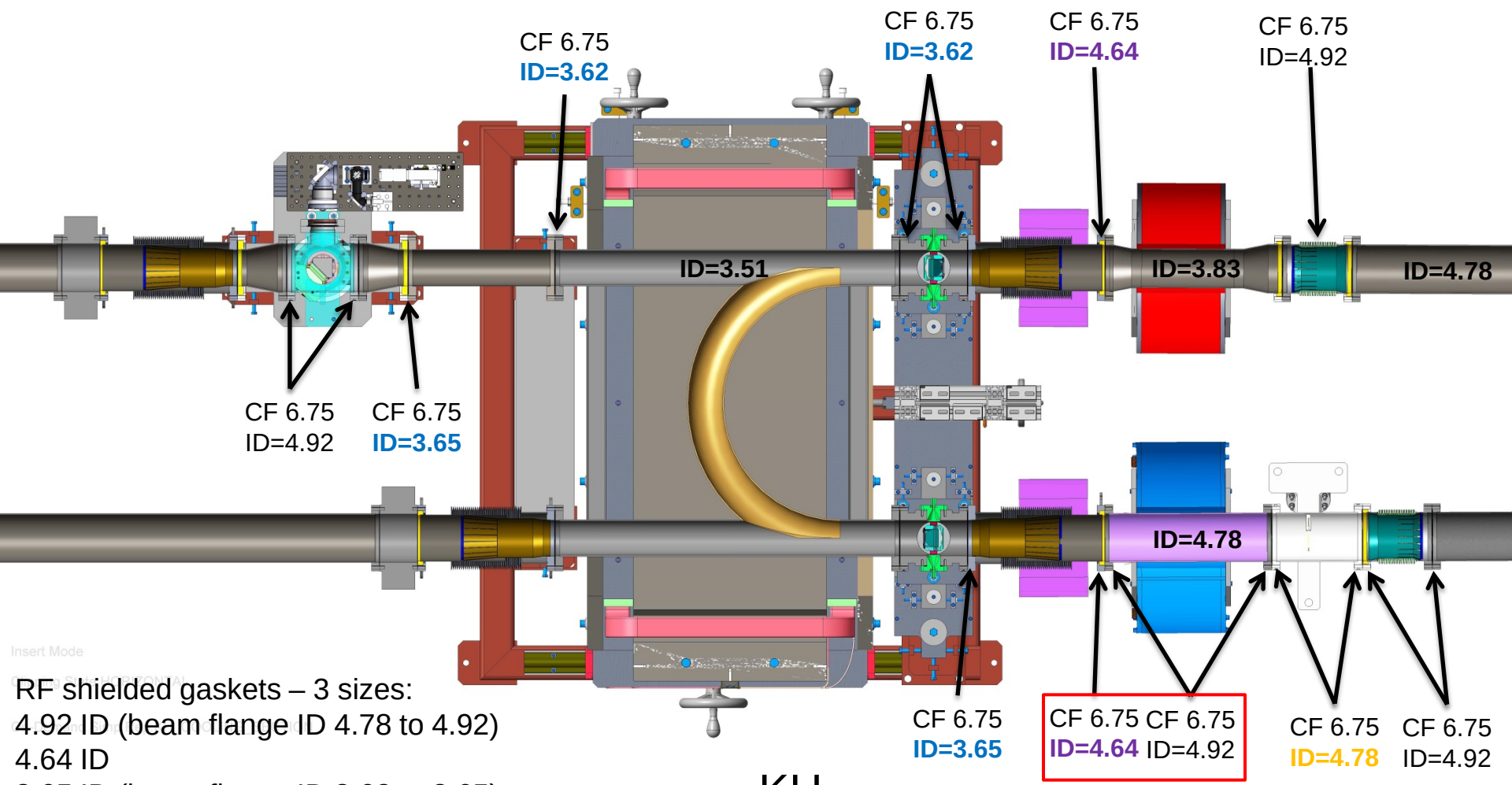

RF shielded gaskets – 3 sizes:
4.92 ID (beam flange ID 4.78 to 4.92)
4.64 ID
3.65 ID (beam flange ID 3.62 to 3.65)

KH

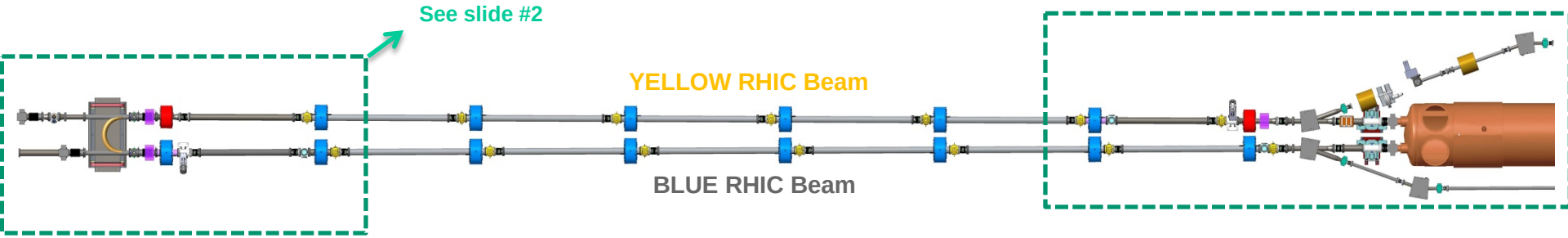

20° Dipole Neighborhood 12/2015

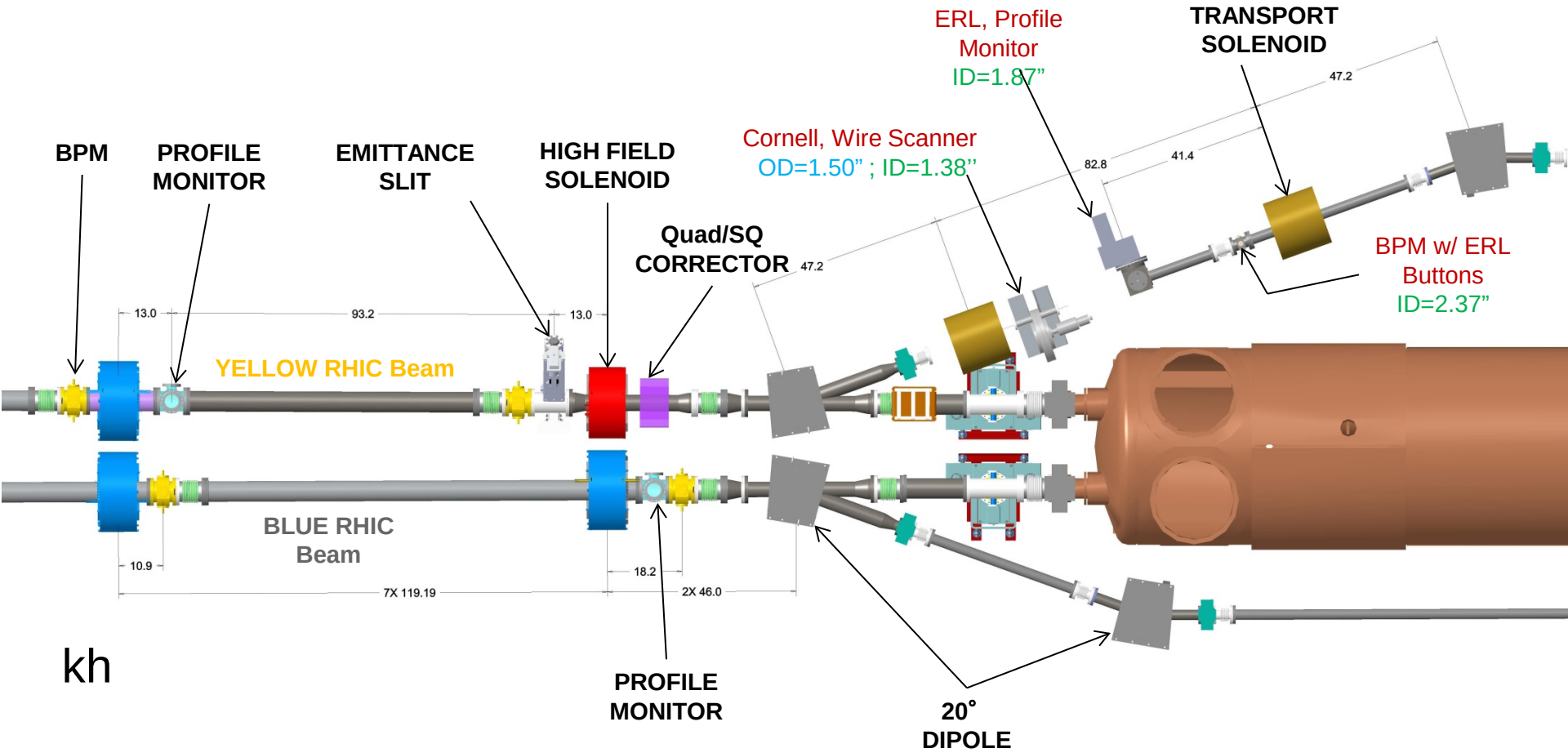

kh
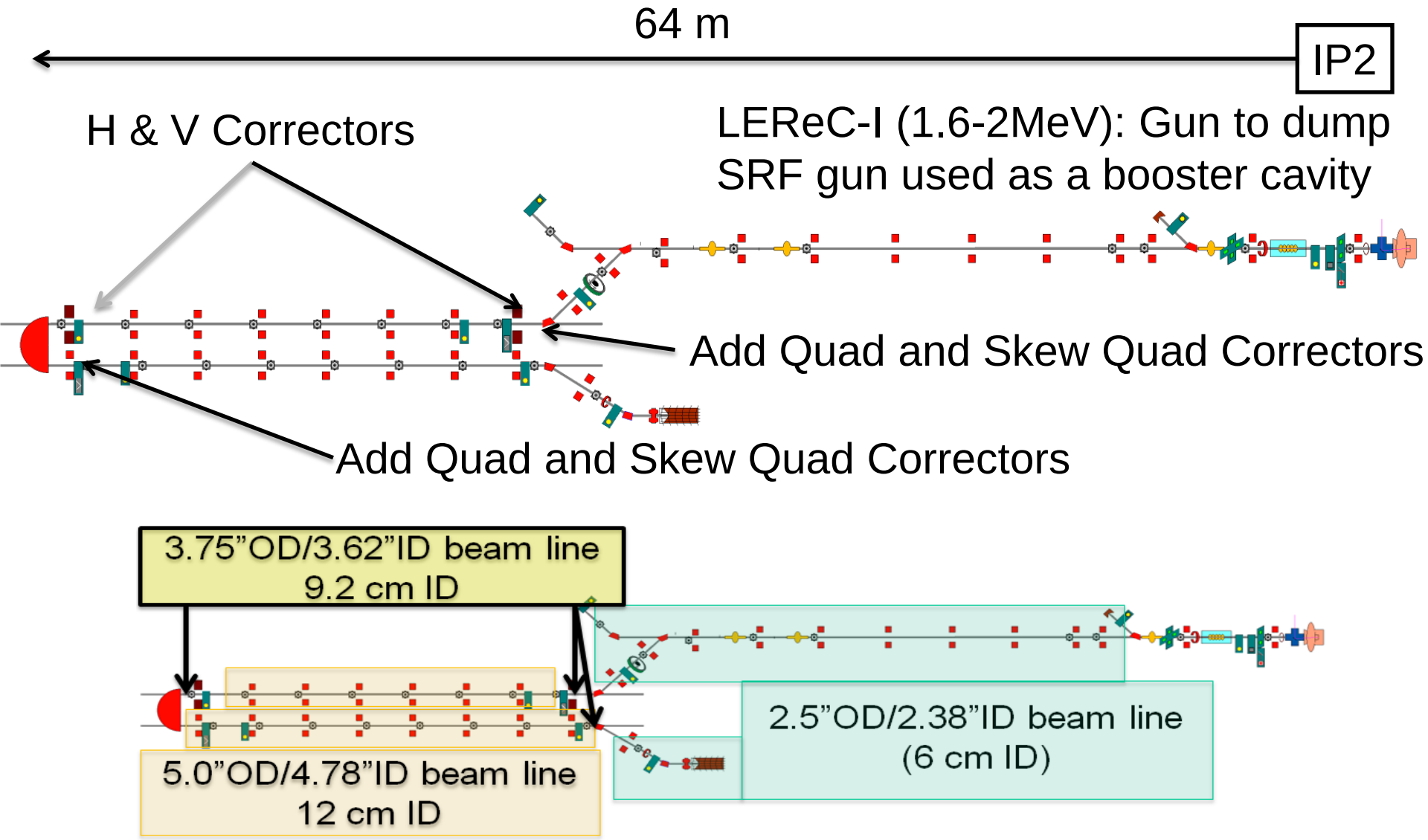
Overall Layout