LEReC

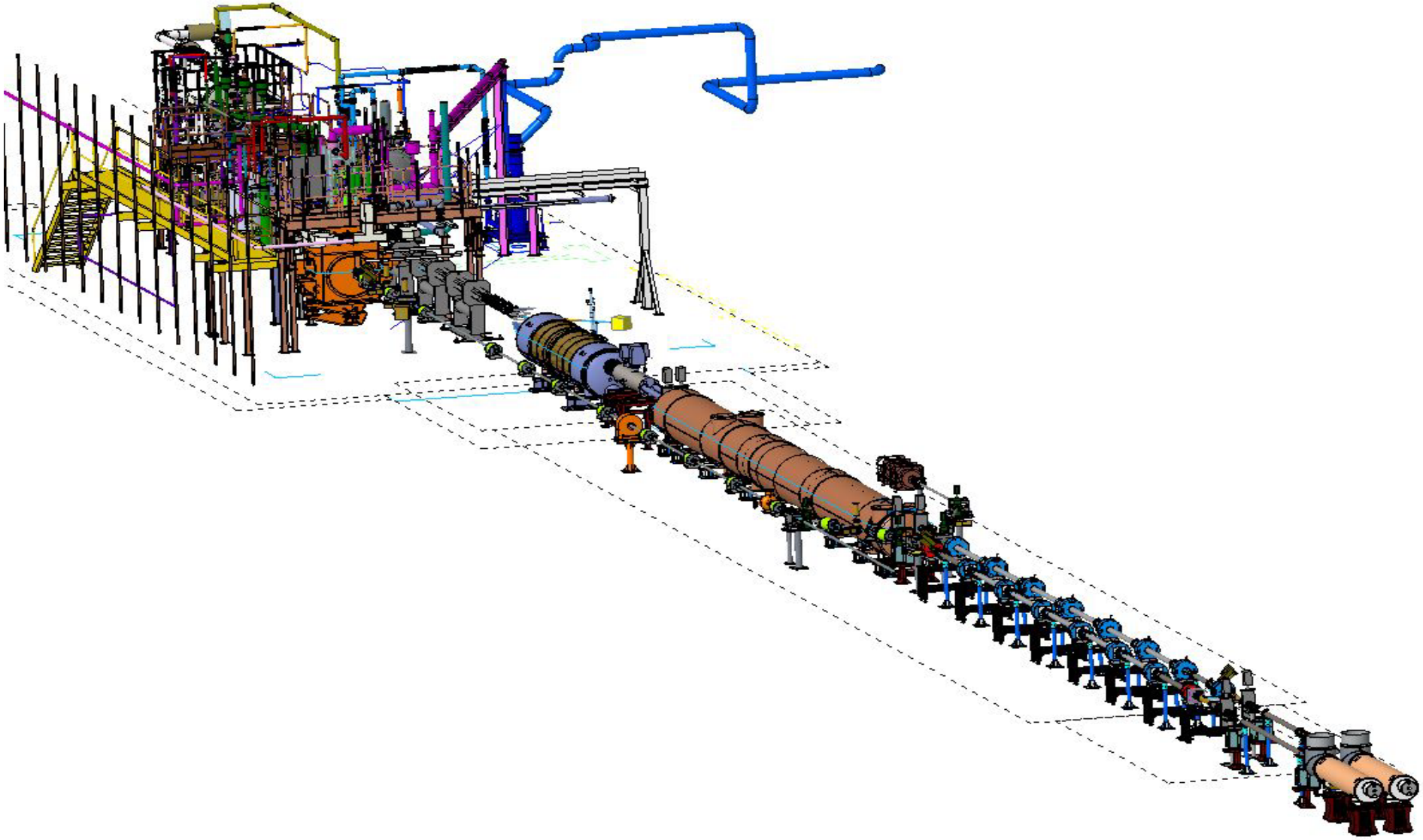

Low Energy RHIC electron *Cooling*

LEReC

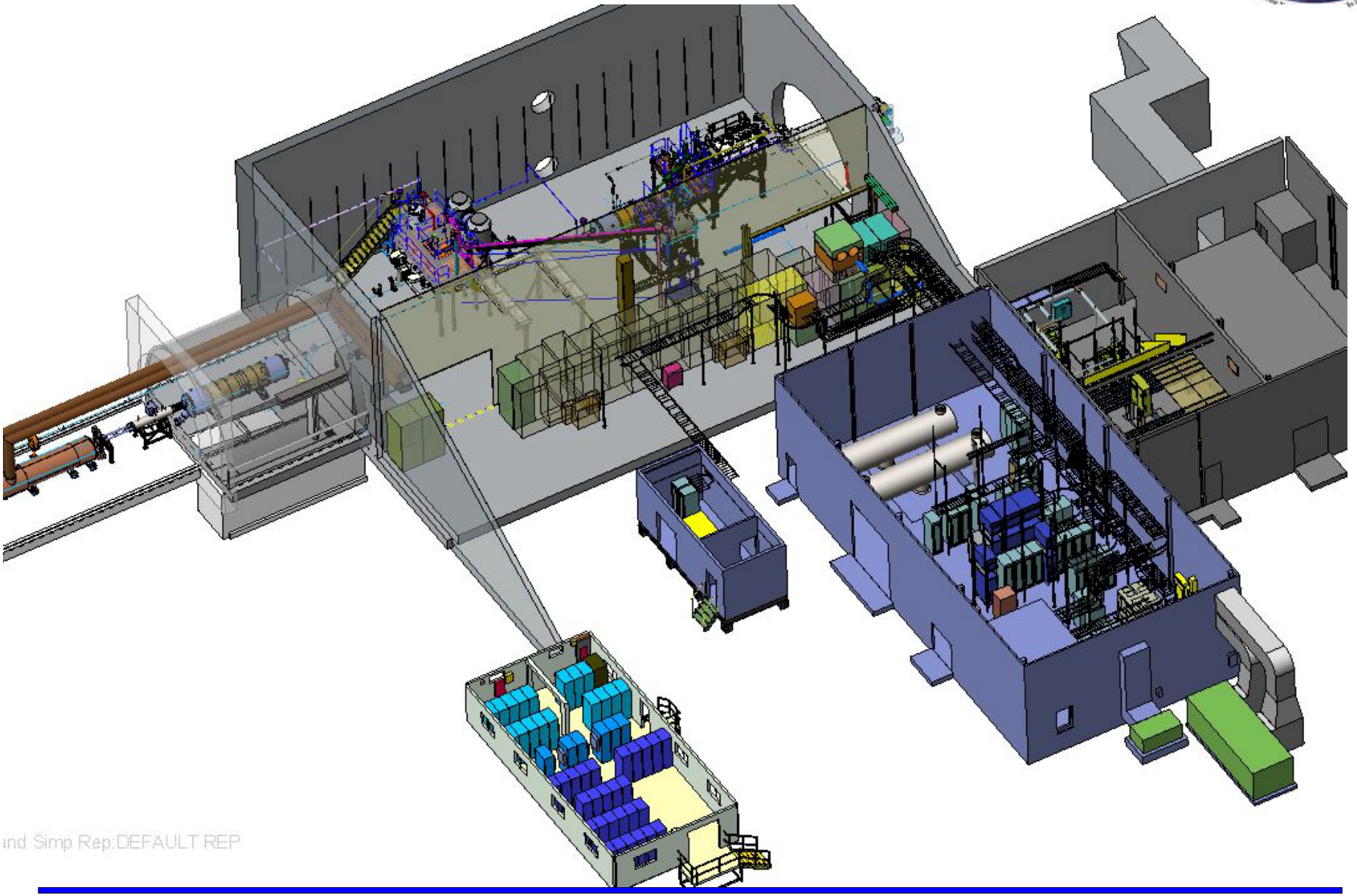

Low Energy RHIC electron *Cooling*

Diagnostics: Gun to Booster Cavity

Parameter	Instrument
Position	BPM System
Current / Charge	ICT, DCCT, Faraday Cup
Profile	Profile Monitors (PM)
Halo	Moveable Halo Detectors
Emittance	Multislit mask + PM

Equipment specifications:
- Solenoids, Dipole, BPM's
- Beam diagnostics hardware and electronics
- Beam line vacuum

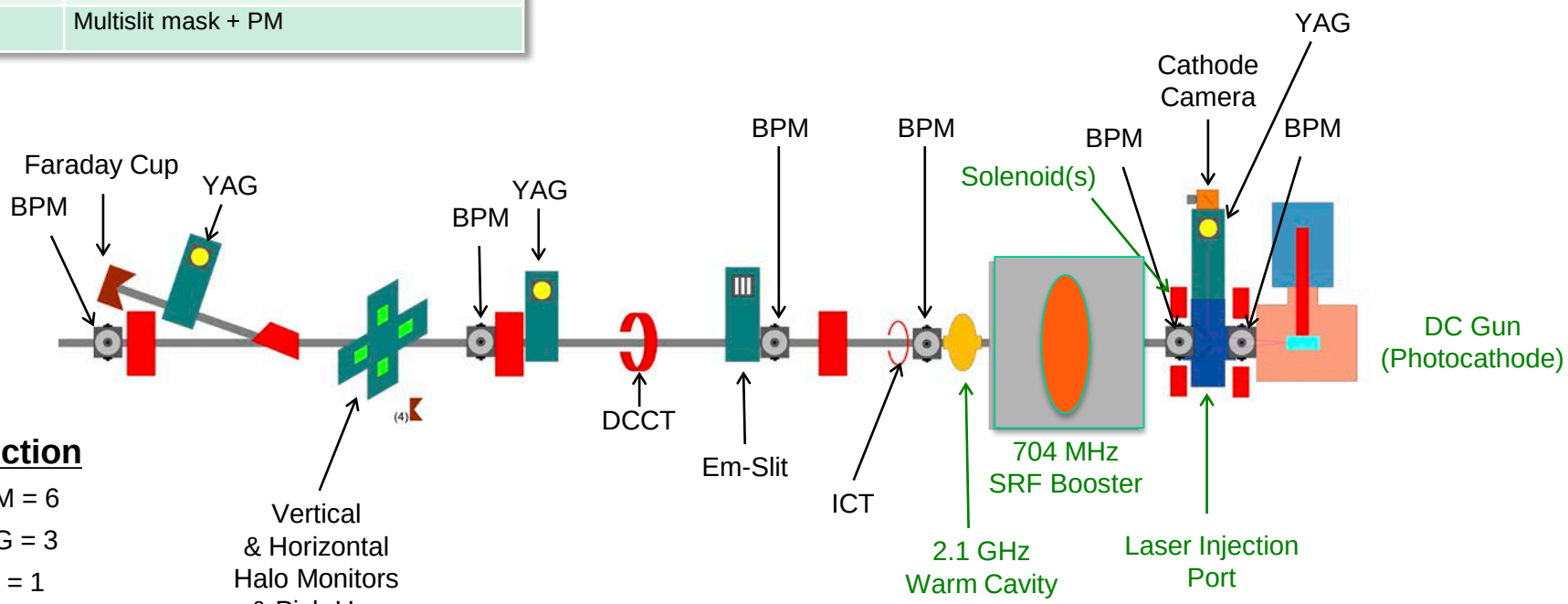

Injection

- BPM = 6
- YAG = 3
- ICT = 1
- DCCT = 1
- Emittance Slit = 1
- Halo Pairs = 2
- Faraday Cup (& pick-ups) = 5

Cornell Layout GtB,
Bake-out to 200C near DC Gun
DC Gun instrumentation:
- **Large Button or ERL Buttons or Striplines??**
- Profile Monitor in Laser Cross
- Cathode Camera in Laser Cross

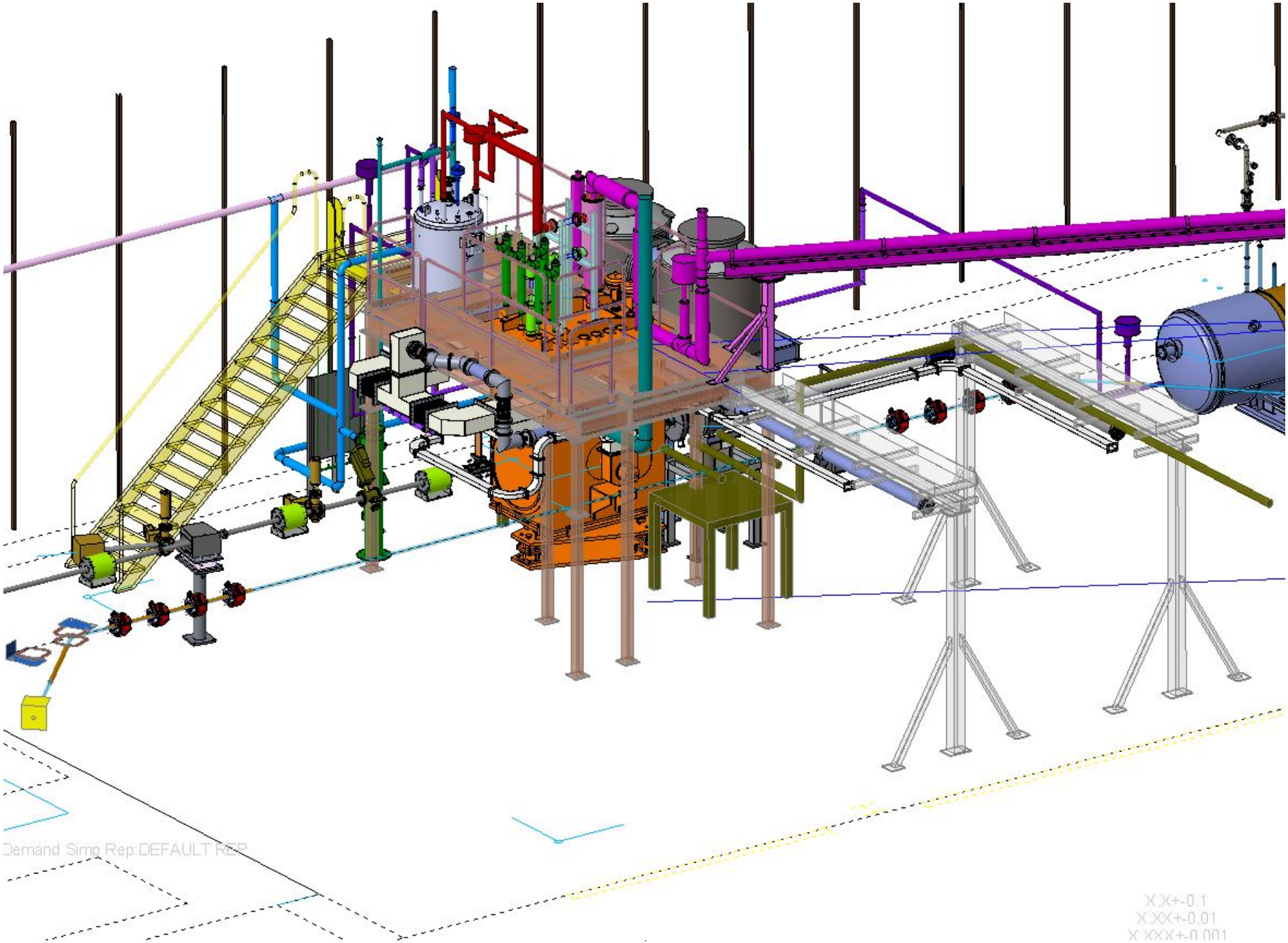
Demand Simp Rep:DEFAULT REP
X.X+-0.1
X.XX+-0.01
X.XXX+-0.001

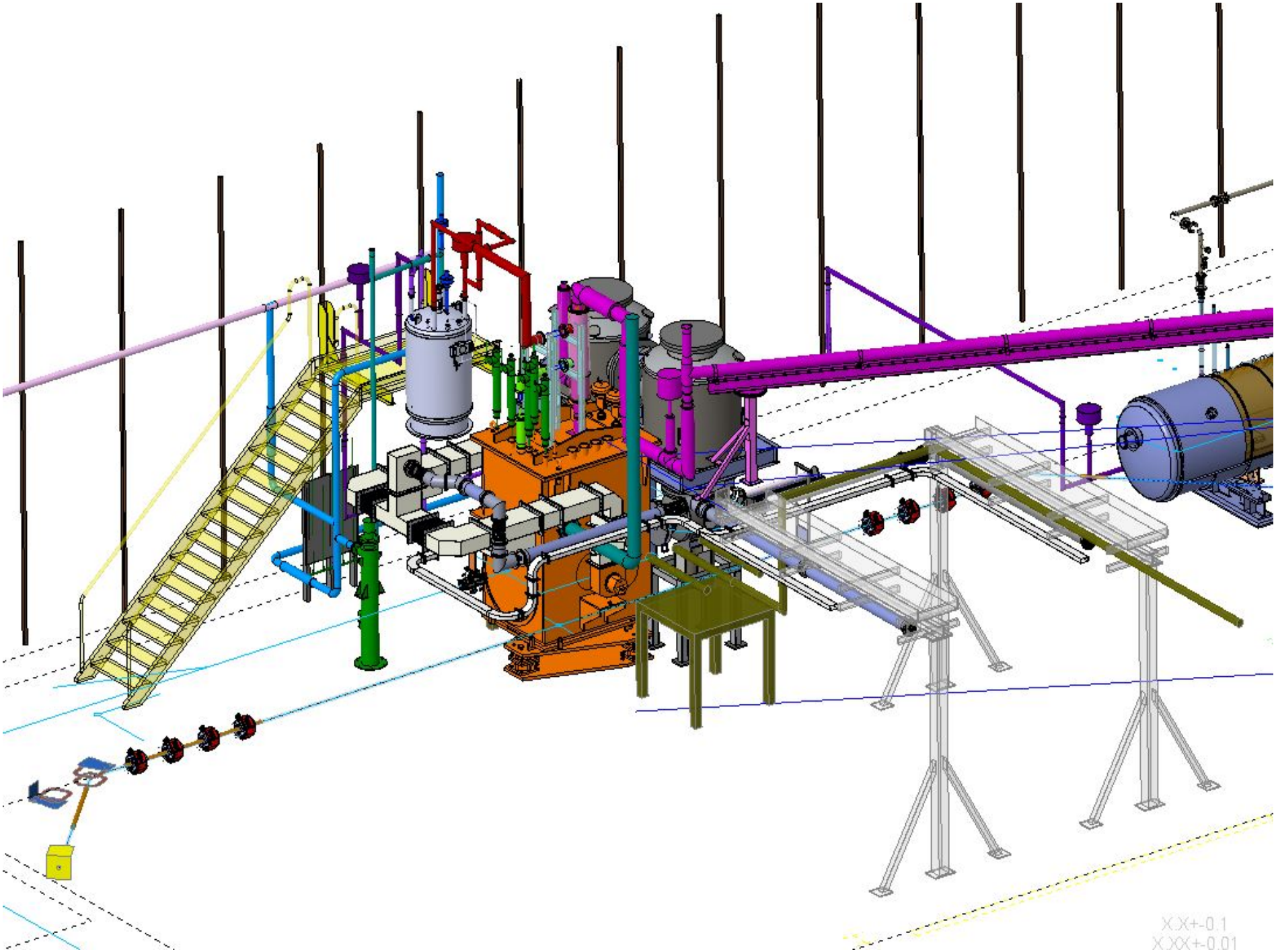
X.X+-0.1
X.XX+-0.01

Booster Cavity Installation

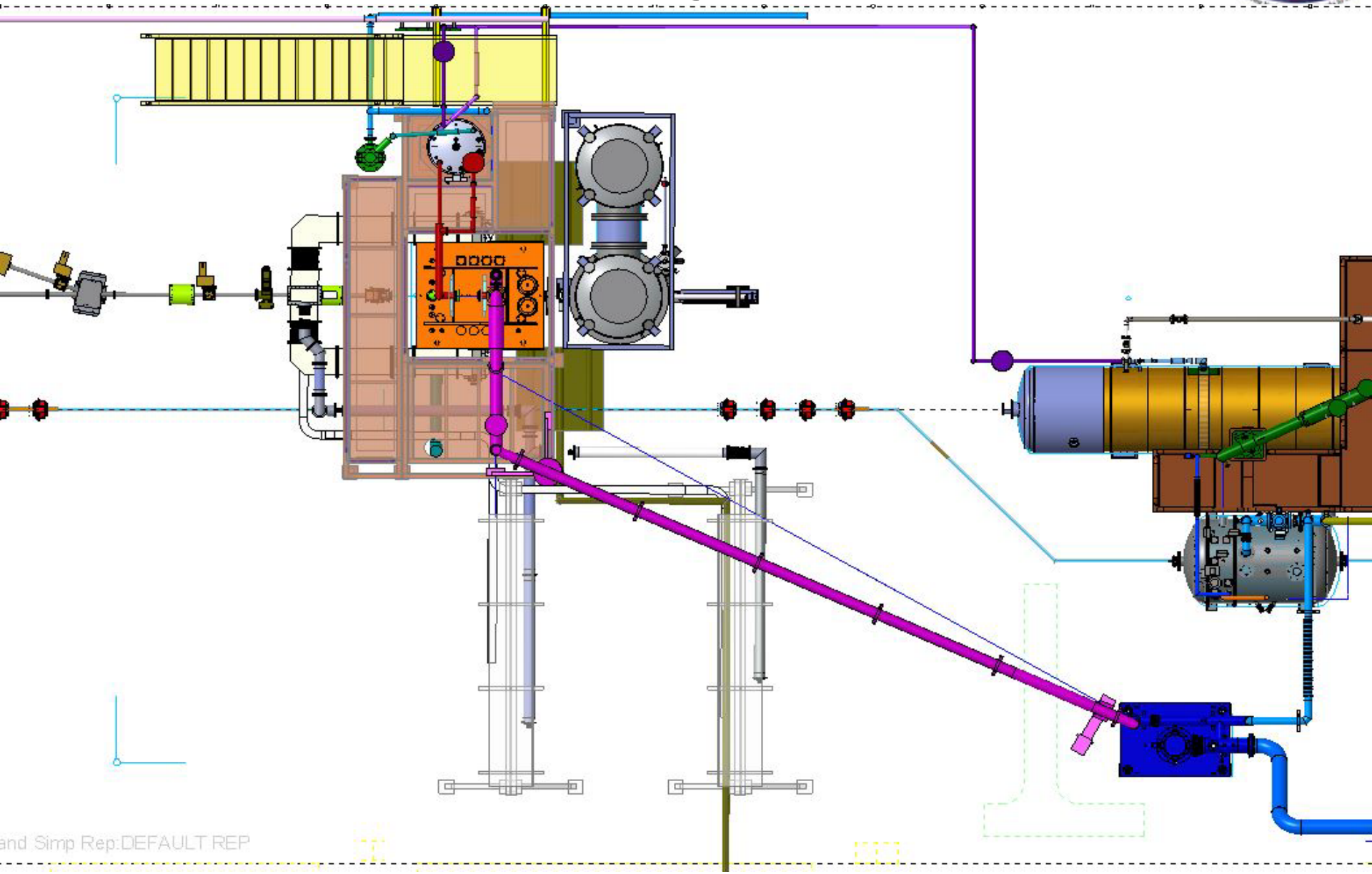

Booster Cavity Installation

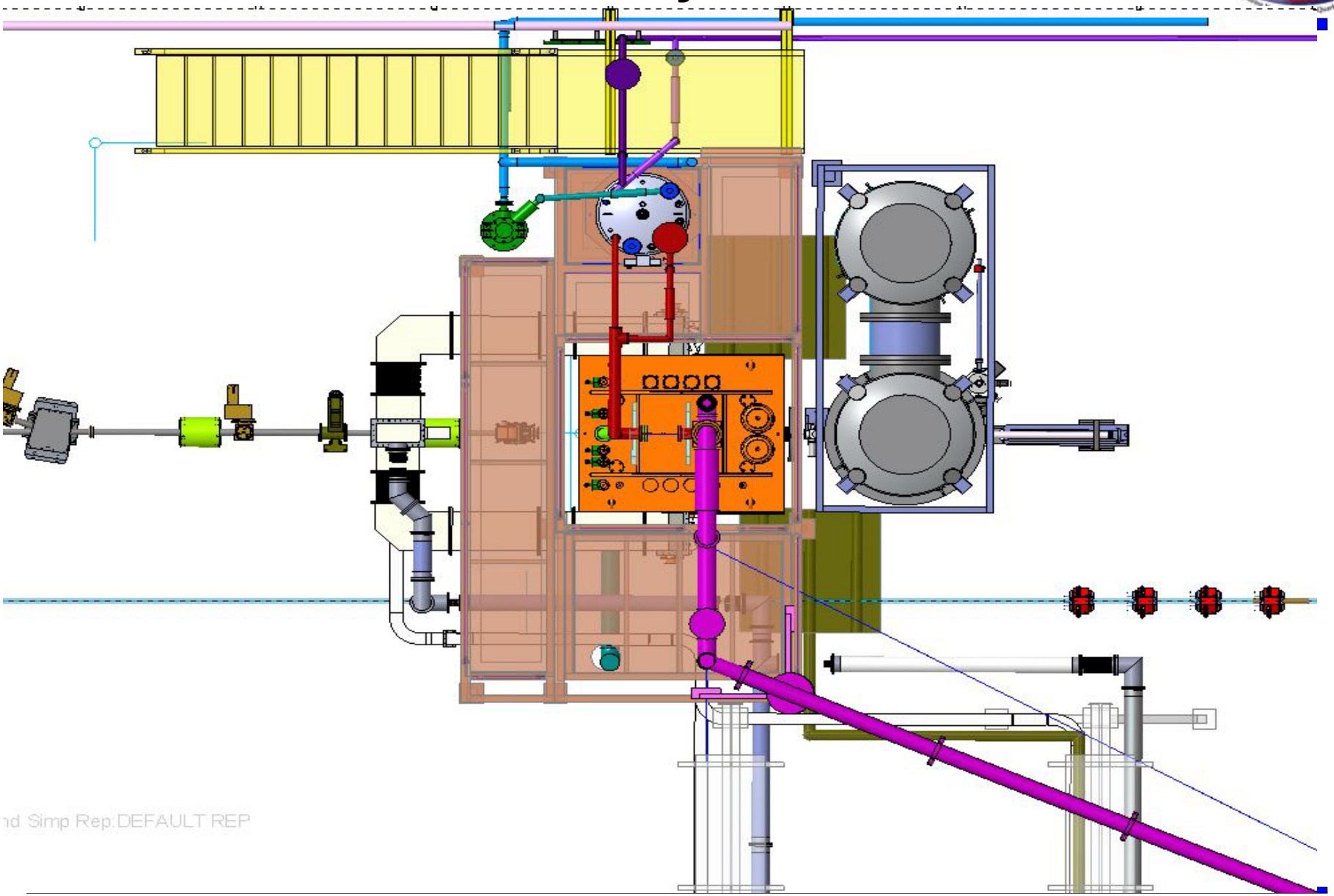

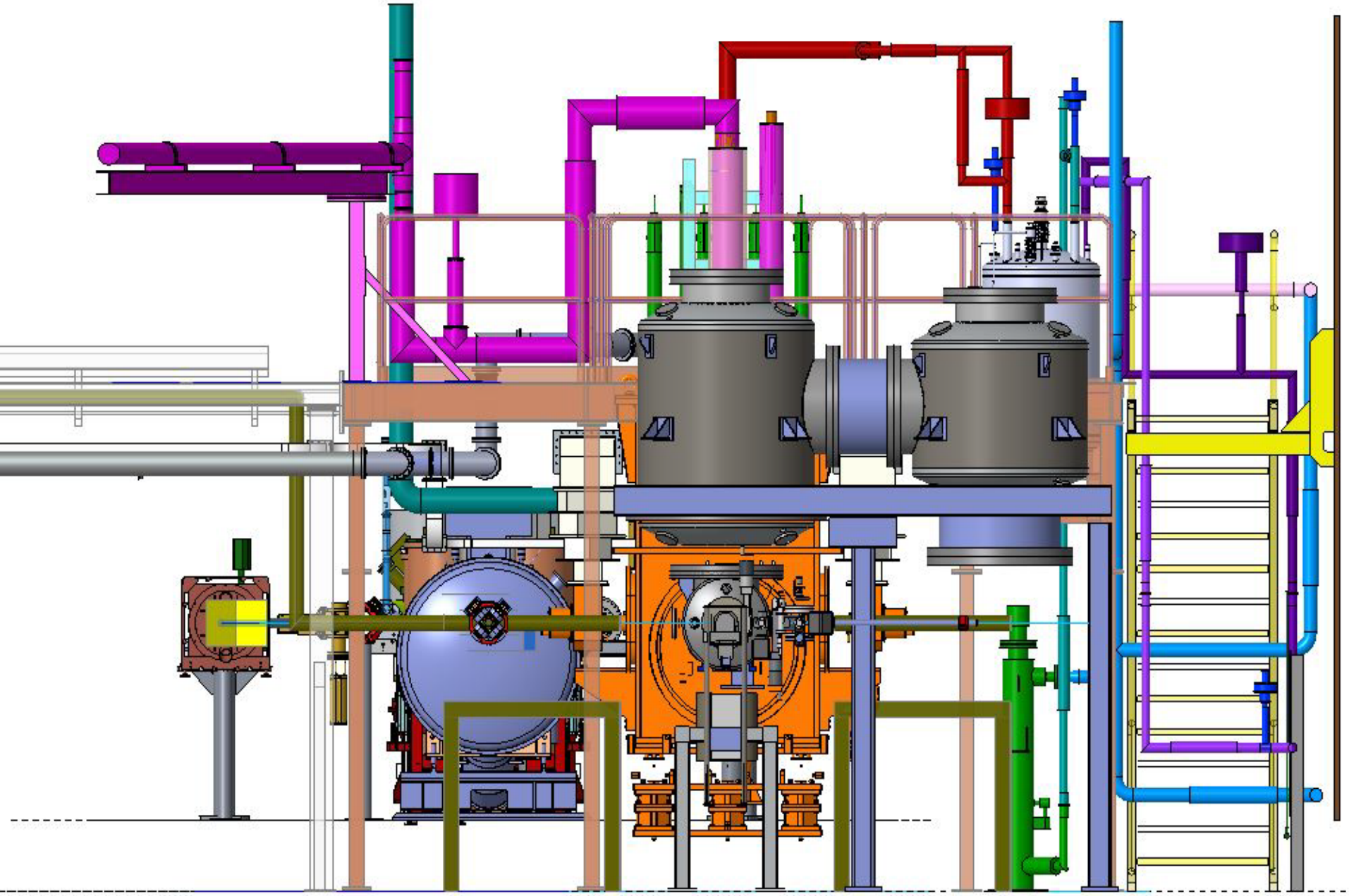

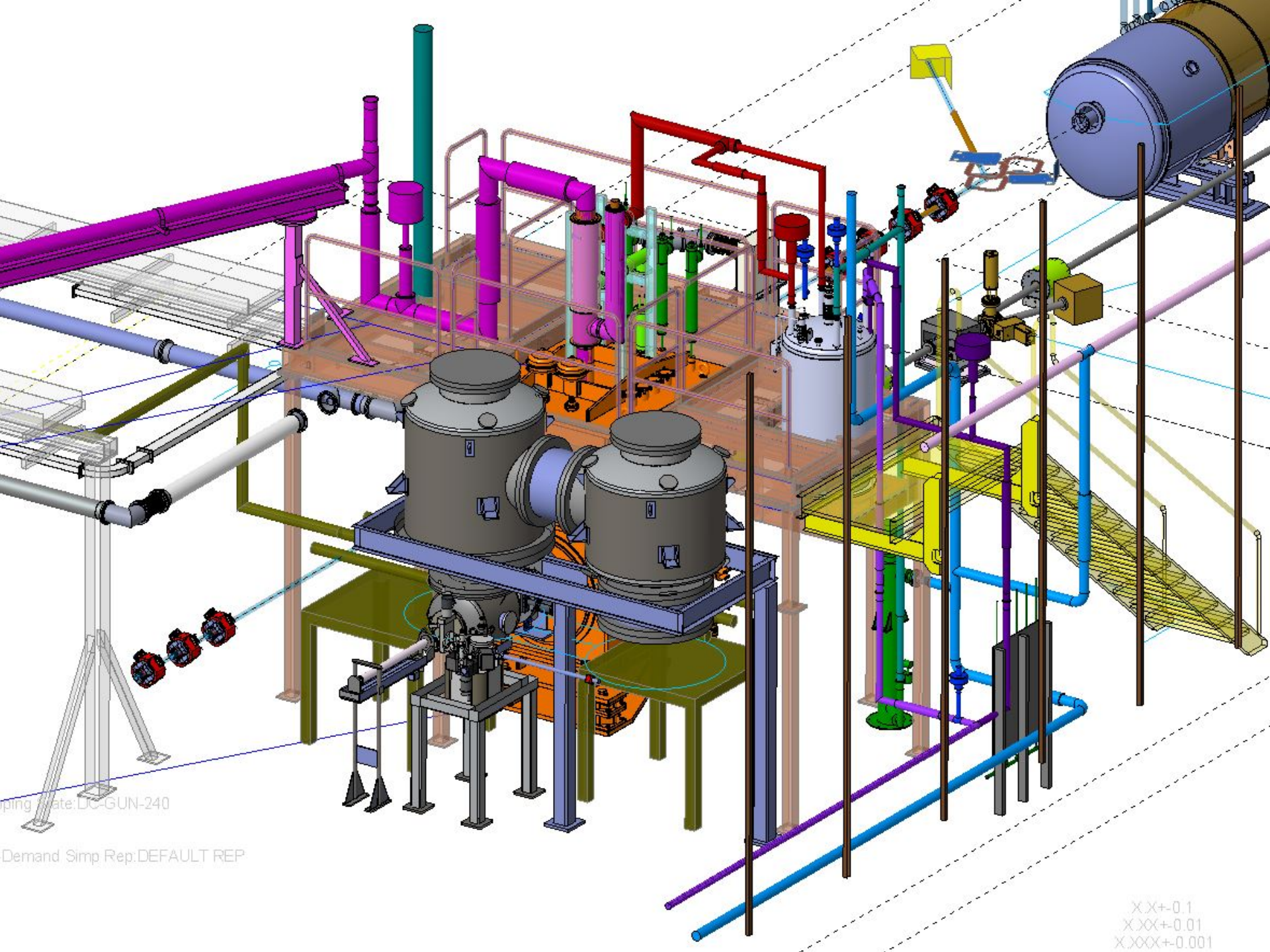
ping State:DC-GUN-240
-Demand Simp Rep:DEFAULT REP
X.X+-0.1
X.XX+-0.01
X.XXX+-0.001
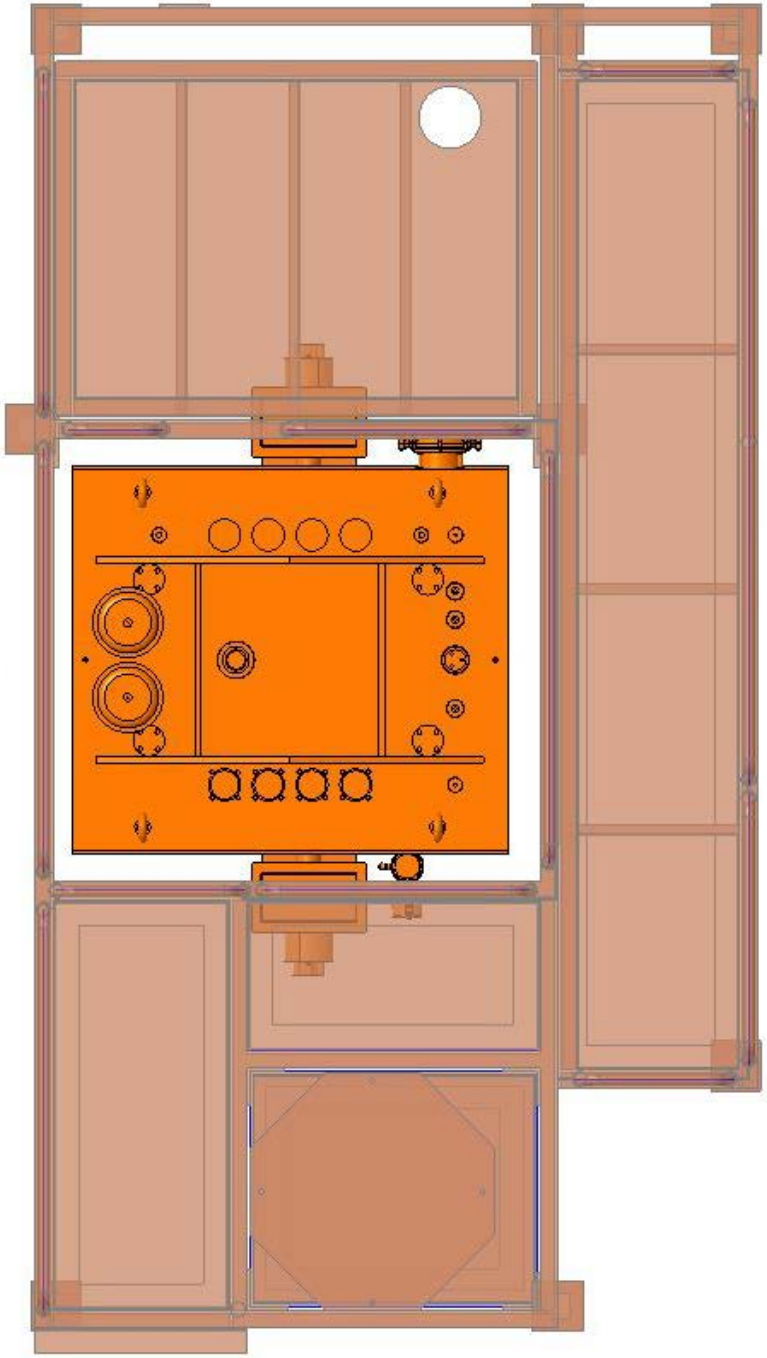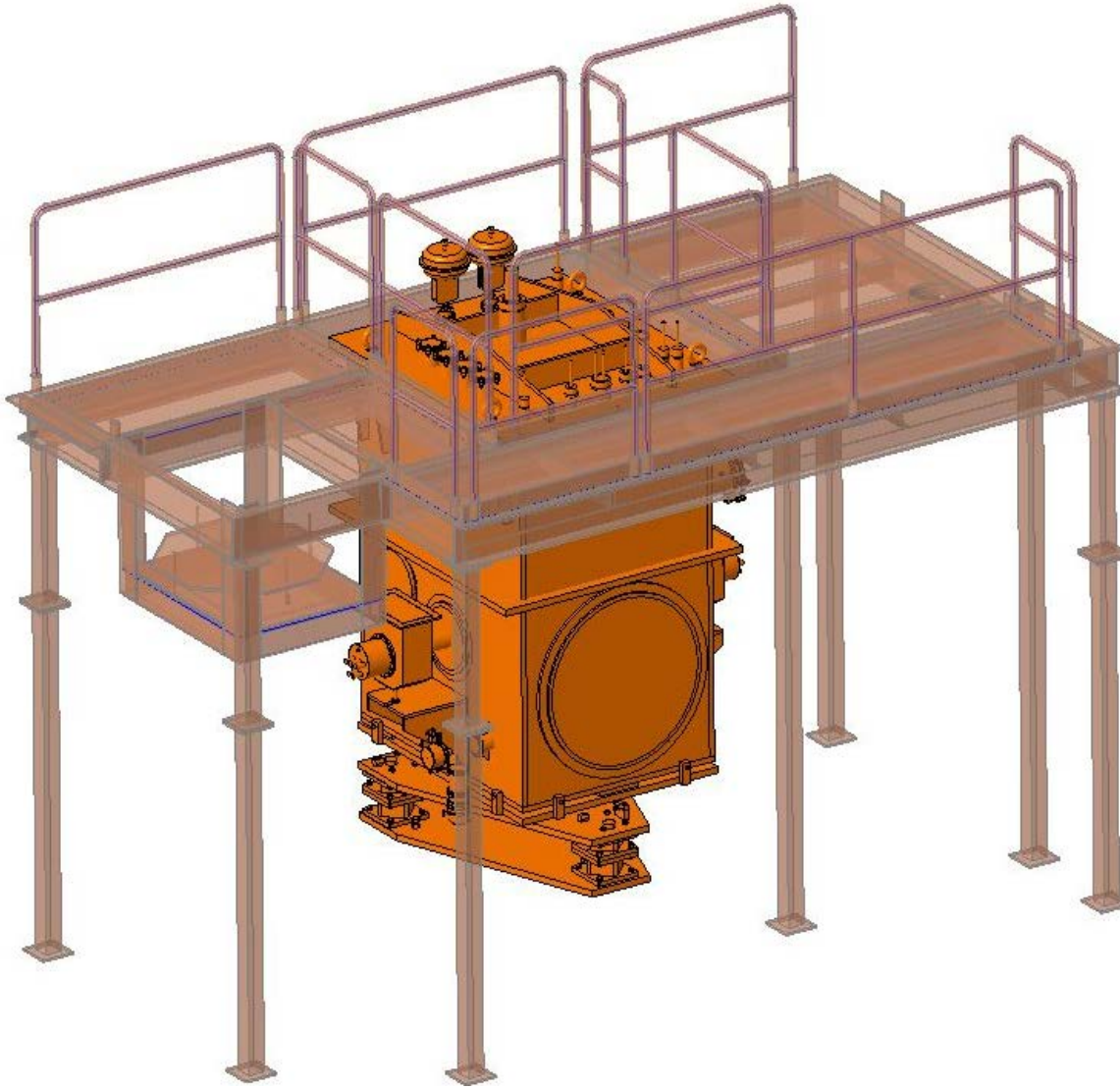
Cavity Installation