LEReC BPMs Approach to Measuring Phase/Time-of-flight

P. Cernigla, R. Hulsart, R. Michnoff, Z. Sorrell

September 29, 2016

Outline

- Position measurement hardware architecture
- Phase measurement at each BPM
- Contributions to error
- Cable Temperature variations
- Pilot tone for amplitude/phase calibration?
- Dedicated phase/time-of-flight hardware configuration
- V301 Phase measurement results with simulated signal

Position Measurement Hardware Architecture

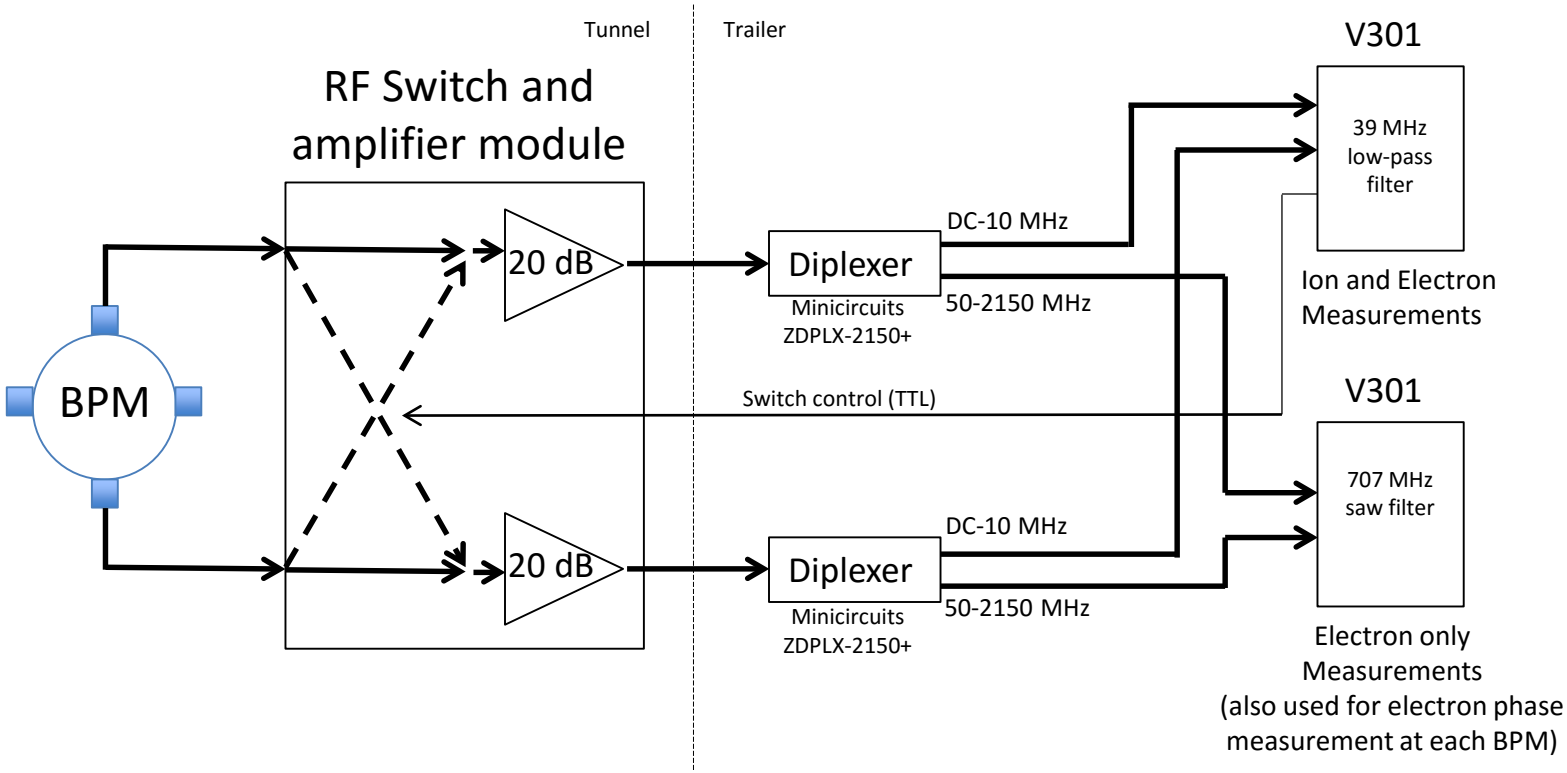

Notes:

- RF switch is continuously cycled to provide real-time calibration of input signals. This will provide automatic compensation of amplitude variations due to electronics and cables when temperature varies.
- Switches provide compensation for all components downstream of switch.
- Cables from BPM to switch module must be matched (length expected to be about 6 ft.
- Offline calibration of switches including cables from BPM to switch is required.

Phase measurement at each BPM

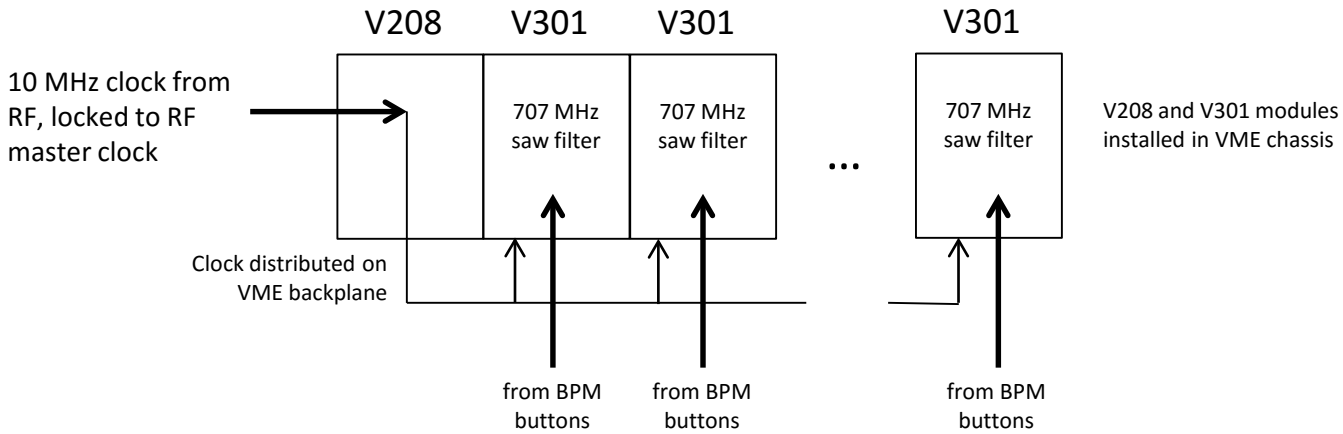

Description of technique for measuring phase at each BPM:

- The 10 MHz master clock from RF is distributed to all V301 modules via the VME backplane through the V208 module
- The 10 MHz RF clock is locked to the RF master clock that is used to generate the 704 MHz clock to the RF cavity
- The 10 MHz RF clock will be multiplied up to 400 MHz in each V301 module
- Each V301 will generate a 704 MHz lookup table in the same manner that the RF system generates the 704 MHz signal
- ADC data will be acquired using the 400 MHz clock that is locked to the RF master clock
- The 704 MHz lookup table data will be acquired with each ADC sample
- The phase of the BPM signals will be calculated
- The phase of the 704 MHz lookup table data will be calculated
- The phase at each BPM will be determined by taking the difference between the BPM signals and the 704 MHz lookup table data
- The phase between any 2 BPMs can be calculated

Phase measurement at each BPM

Diagram of V301 module processing for phase computation at each BPM

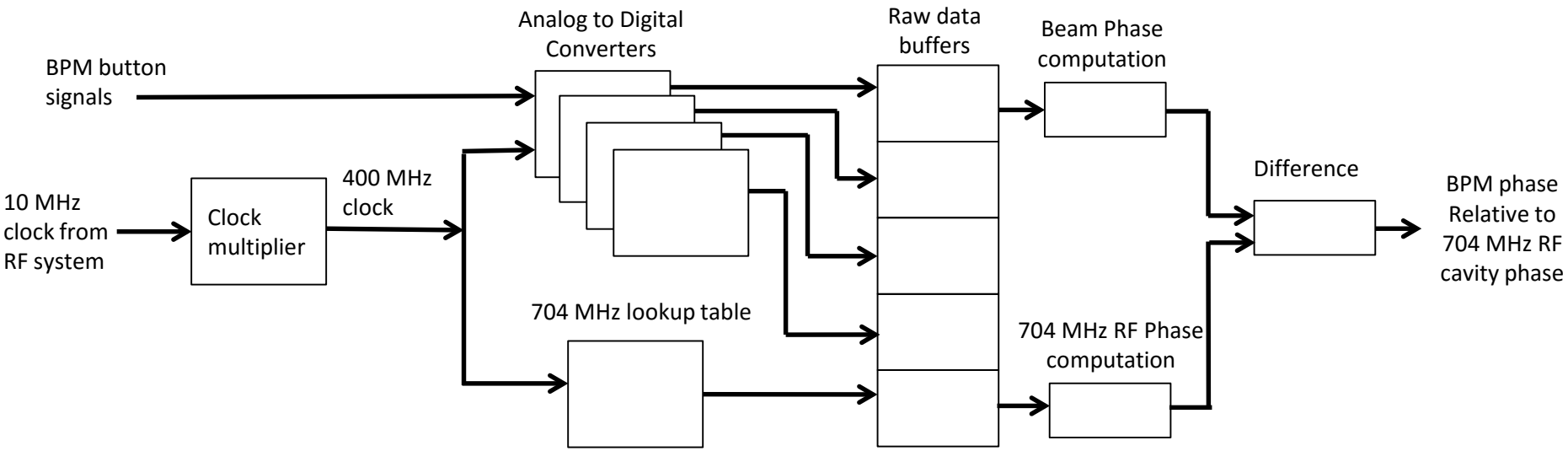

Contributions to error

- Cable mismatches, including from button to switch board.
  - 700 MHz phase mismatches are significant
- Analog switches
  - Switches will need to be calibrated for both normal and reverse positions, and calibration must include cables to buttons.
- Button mismatches
- Crosstalk on V301 at 700 MHz frequency
- Temperature variations in electronics and cables
- Filter response at different frequencies and different bunch repetition rates
- Beam pipe mechanical variations due to temperature variations

Cable Temperature Variations

Phil Cerniglia found a very relevant paper:

SLAC–PUB–6297
July 1993
(I/A)

Control of Coaxial Cable Propagation Delay for a Beam Phase Monitor

D. McCormick and M. Ross *
Stanford Linear Accelerator Center
Stanford University, Stanford, CA 94309

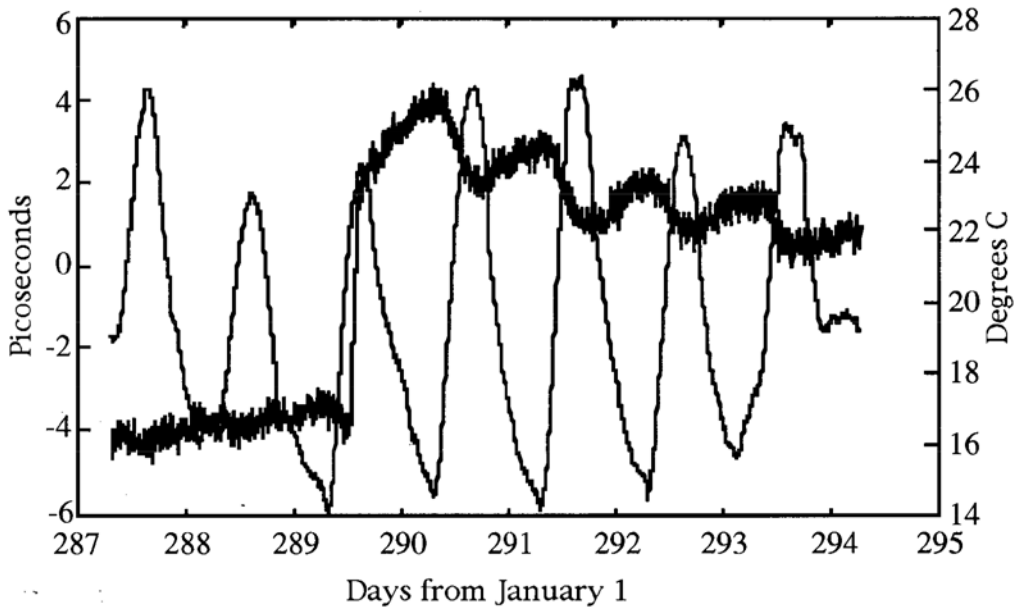

SLAC controlled the propagation delay in the coaxial cables (Andrews FSJ-4-50) "by placing the cables inside double wall tubing with temperature-stabilized water flowing between the walls."

In this plot, the stabilization system was ON prior to day 289 and turned OFF at noon on day 289. With temperature variations of about 10 deg C, and 40 m cables, the delay varied by about 1.5 ps.

Cable Temperature Variations

- Propagation delay variation for Andrews FSJ-4-50 (same manufacturer as we use but slightly different cable) was measured by SLAC to be 0.042 ps/m/degC.
- For 100 m long cable and 10 degC variation, this equates to 42 ps delay variations.
- While this seems enormous, we can assume that a large part of our variations will be similar across all cables.
- Therefore, the actual variations between BPM signals will be much less than 42 ps, but will not be insignificant because:
  - Cable length differences exist
  - Cables in exterior cable trays will not heat evenly

Pilot tone for amplitude/phase calibration?

- During IBIC 2016, some experts (Julien Bergoz for one) recommended against using switches and suggested using a pilot tone injected on the BPM signals, which could be used for calibration of amplitude and phase.
- However, after significant consideration we have decided not to pursue this option for the following reasons:
  - Delay and phase drifts still exist in the cables used to provide a pilot tone.
  - NSLS II planned to use a pilot tone for calibration but it ultimately did not operate as expected.
    - Specific details of the problems are not clear
    - They found that the stability was quite good and therefore did not require continuous calibration (mainly because temperature of the accelerator building and BPM racks is well-controlled.
  - Implementation of a pilot tone adds significant complexity and cost.

Pilot tone interconnection scheme

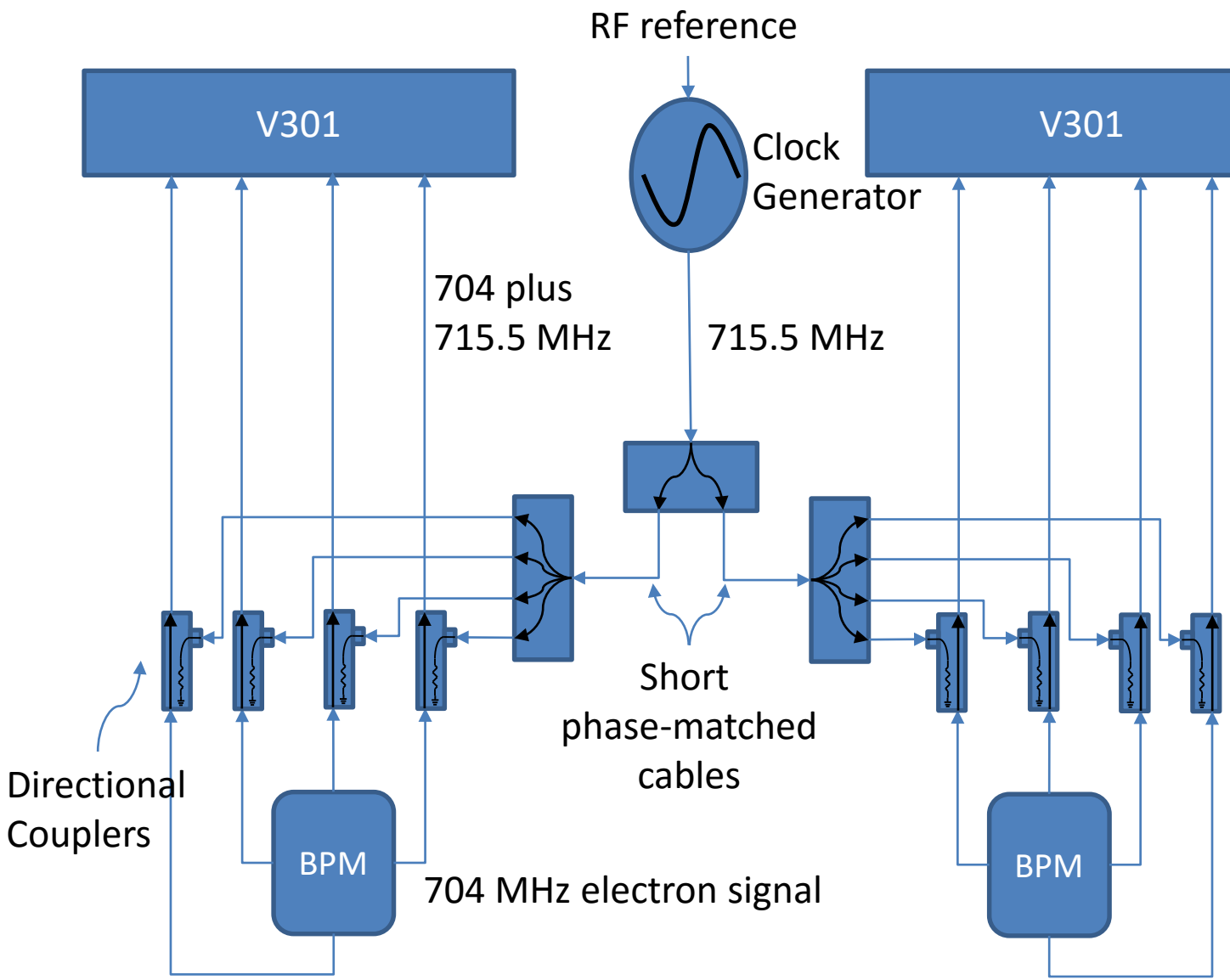

Assuming that the phases at the inputs of the 4-way splitters are equal (or that the phase offset between the 2-way and 4-way splitters is known) and that the short cables have negligible phase drift, the difference in phase offsets between the long BPM cables can be found by comparing the phase of the 715.5 MHz tone at each BPM (phase drifts for the line carrying the tone into the tunnel are common between all channels and cancel).

Dedicated Phase/Time-of-flight Hardware configuration

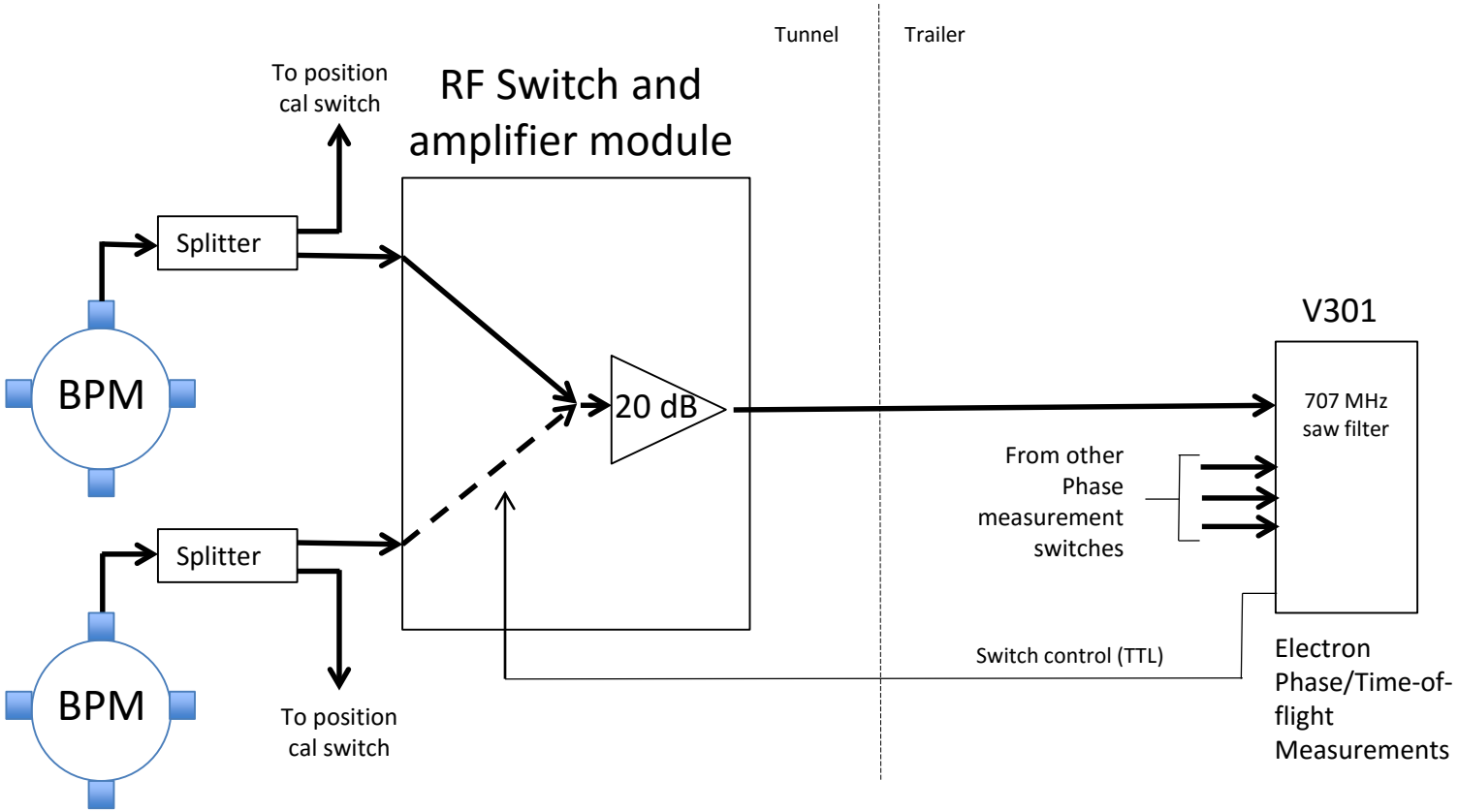

Notes:

- One V301 module can be used to measure phase differences for 4 pairs of BPMs
- Cables from BPM to splitter must be matched (length expected to be a few inches)
- Cables from splitter to switch module must be matched (length expected to be a few (~2) meters)
- Dedicated cables from tunnel to trailer are required

V301 Phase Measurement Data with simulated signals in lab

Block diagram of test setup in lab

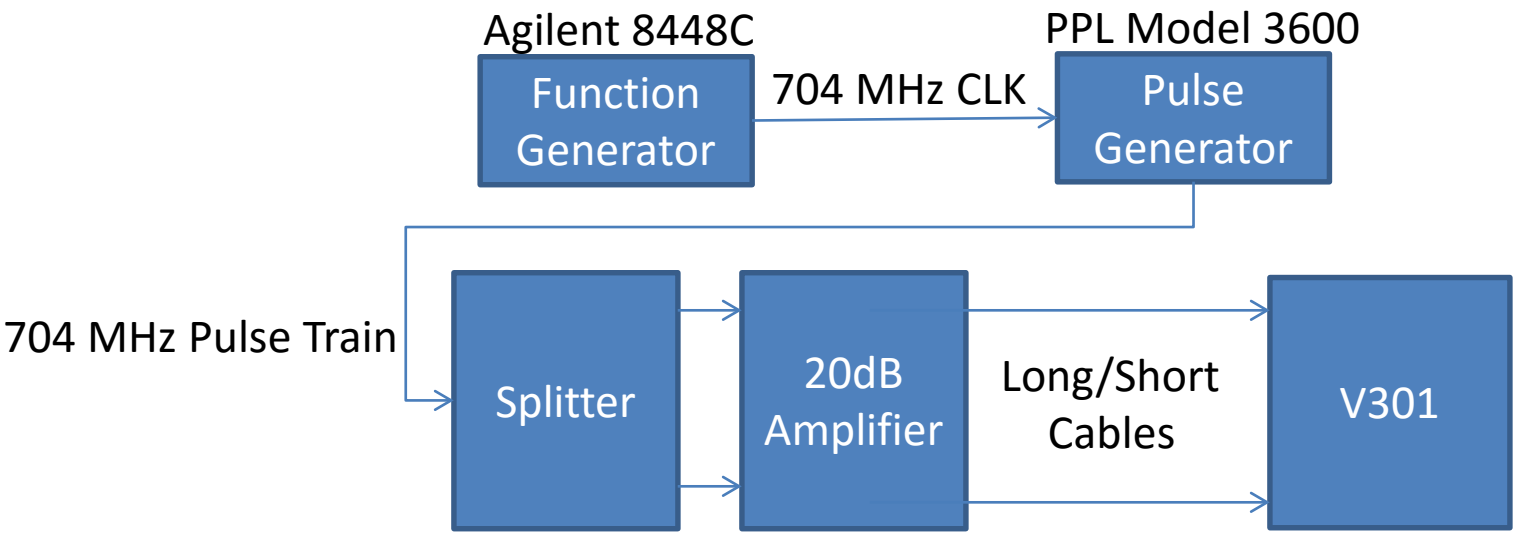

V301 Phase Measurement Data with simulated signals in lab

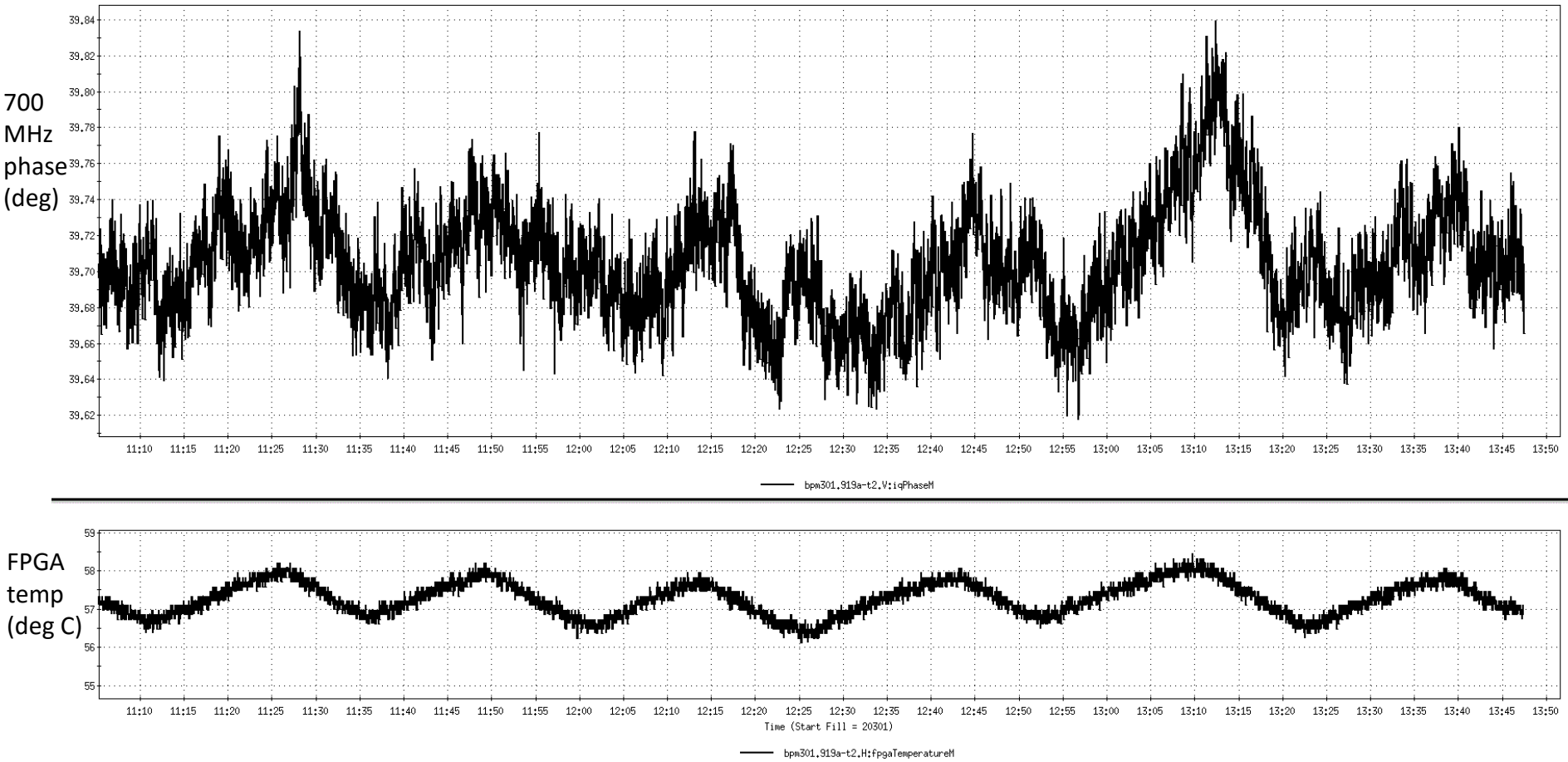

Phase Variations over ~2.5 hours w/ about 200 ft cable in air conditioned room

Temperature variation is about 2 deg C resulting in about 0.22 deg of 700 MHz period (0.87 ps)

V301 Phase Measurement Data with simulated signals in lab

Phase Variations on a Small Cable

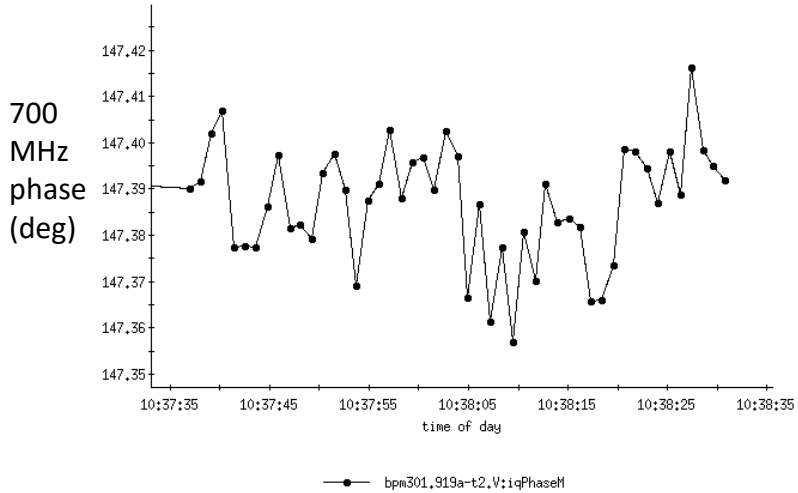

Phase Variations on a Long Cable

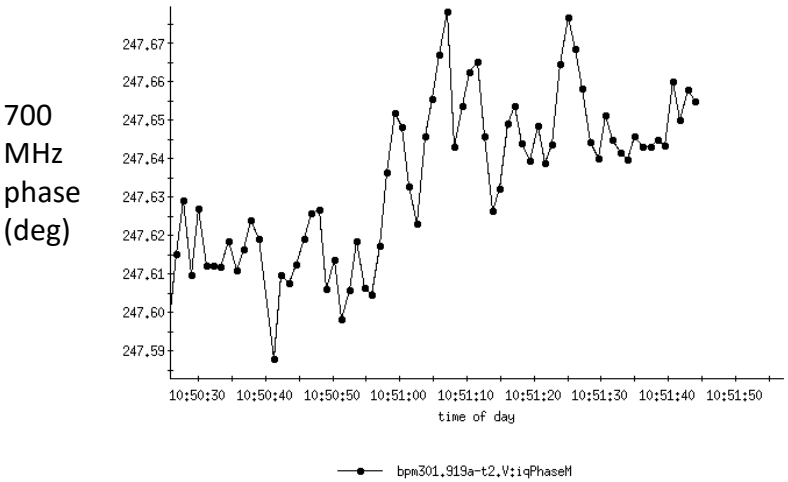

Disconnecting and Reconnecting a Connector with a Normal Wrench

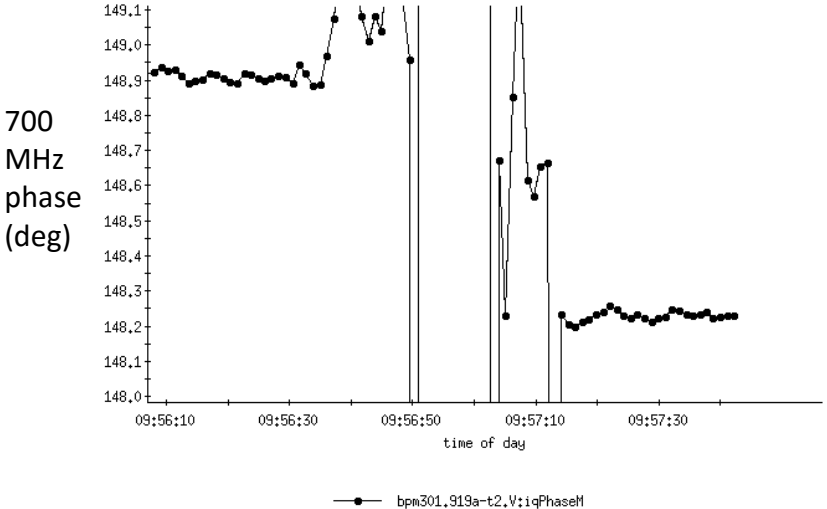
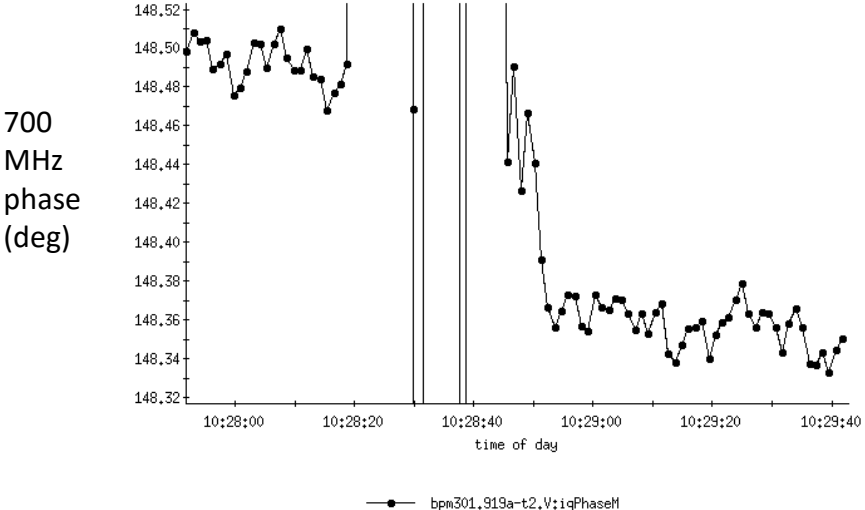
Disconnecting and Reconnecting a Connector with a Torque Wrench