LEReC INSTRUMENTATION DEVELOPMENT

5-12-16

T MILLER

Topics

- MPS

- Time of Flight energy spread measurement in G-t-B via BPMs
  - Need comment from R. Michnoff
- Beam Loss Measurements from SUM function in BPMs
  - Need comment from R. Michnoff

Full Machine Layout

Needs update…

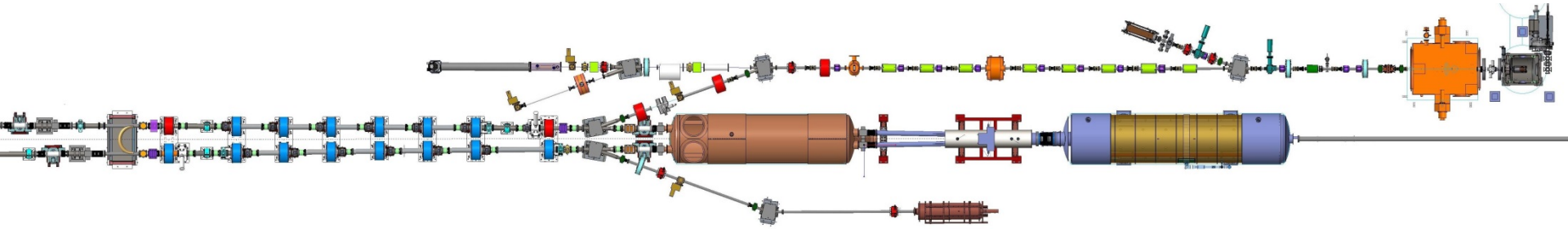

Gun – to – Booster Instrumentation

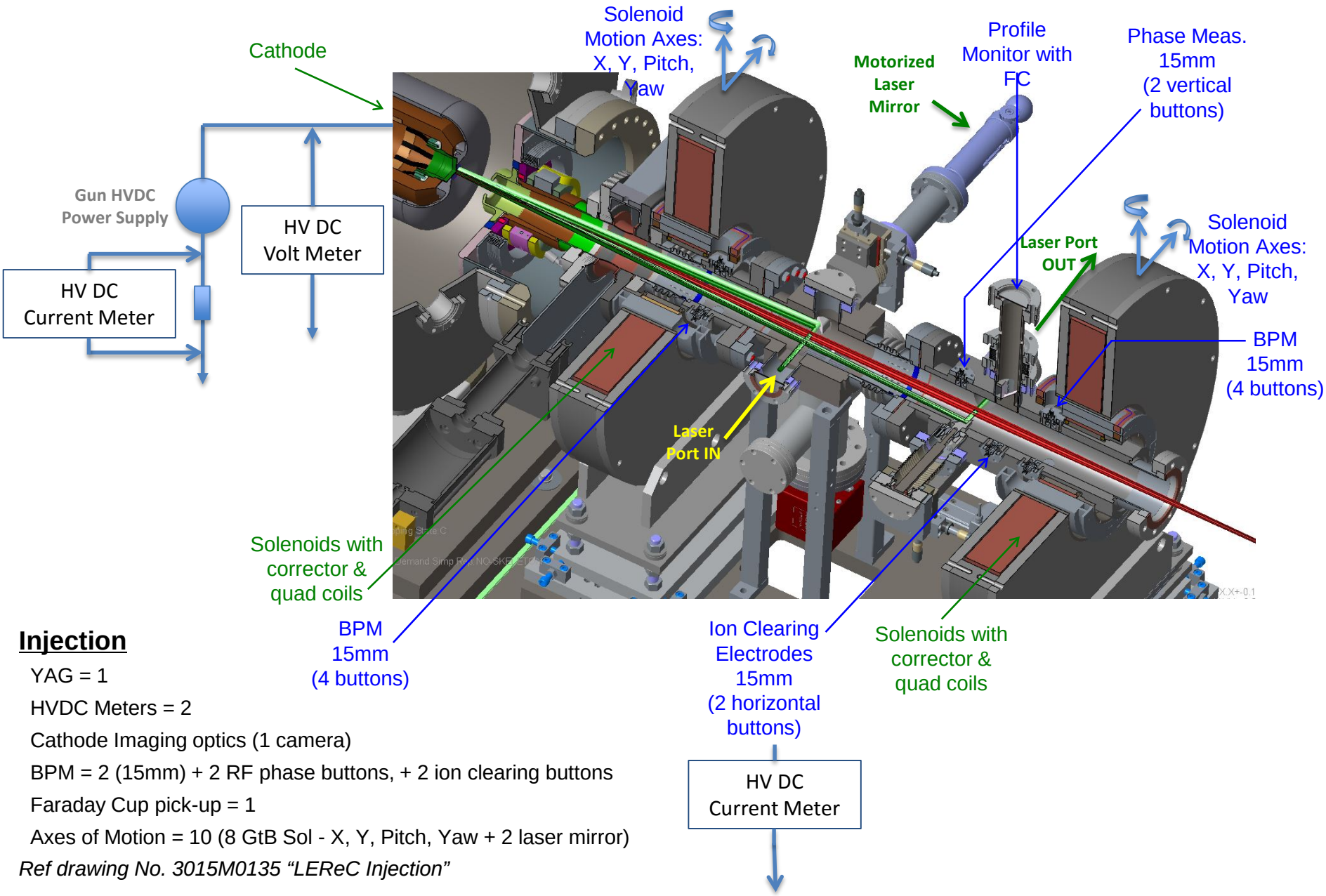

Injection

YAG = 1

HVDC Meters = 2

Cathode Imaging optics (1 camera)

BPM = 2 (15mm) + 2 RF phase buttons, + 2 ion clearing buttons

Faraday Cup pick-up = 1

Axes of Motion = 10 (8 GtB Sol - X, Y, Pitch, Yaw + 2 laser mirror)

Ref drawing No. 3015M0135 "LEReC Injection"

Gun Test Beam Line Instrumentation

Layout update 5/12/16 from K. Hamdi

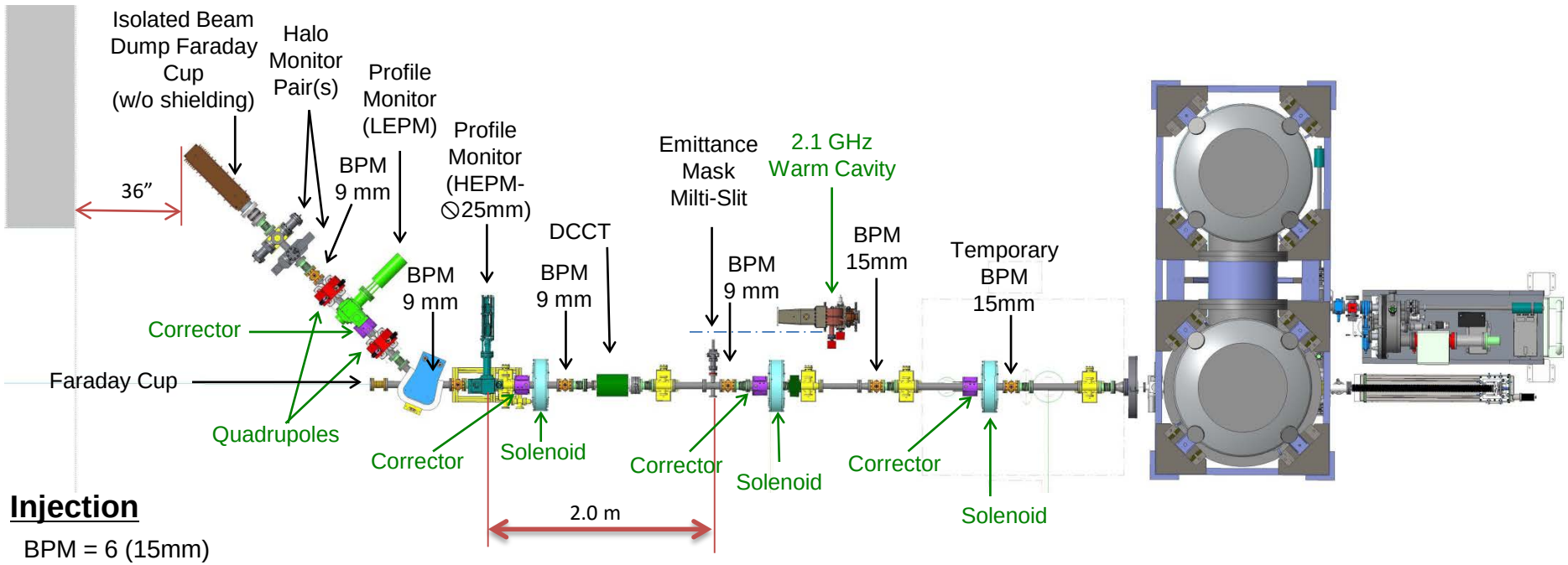

Injection

BPM = 6 (15mm)

YAG = 2

ICT = 1

DCCT = 1

Emittance Slit = 1

Halo Pairs = 2

Faraday Cup (& pick-ups) = 4

Axes of Motion = 6 (4 HaloMon + 2 RF cavities)

Ref drawing No. 3015M0135 “LEReC Injection”

Scope: Transport

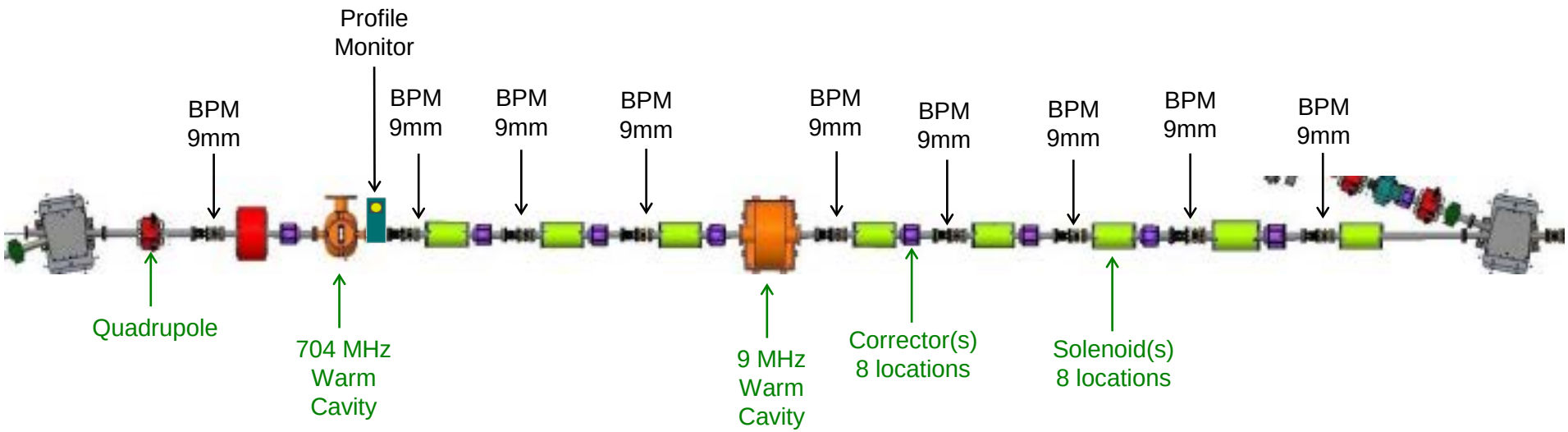

<u>e-Beam Transport</u>

BPM = 9 (9mm)

YAG = 1

Axes of Motion = 2 (1 / RF cavity)

Ref drawing No. 3015M0134 "LEReC Transport, Merger & Extraction"

Merger Beam Line

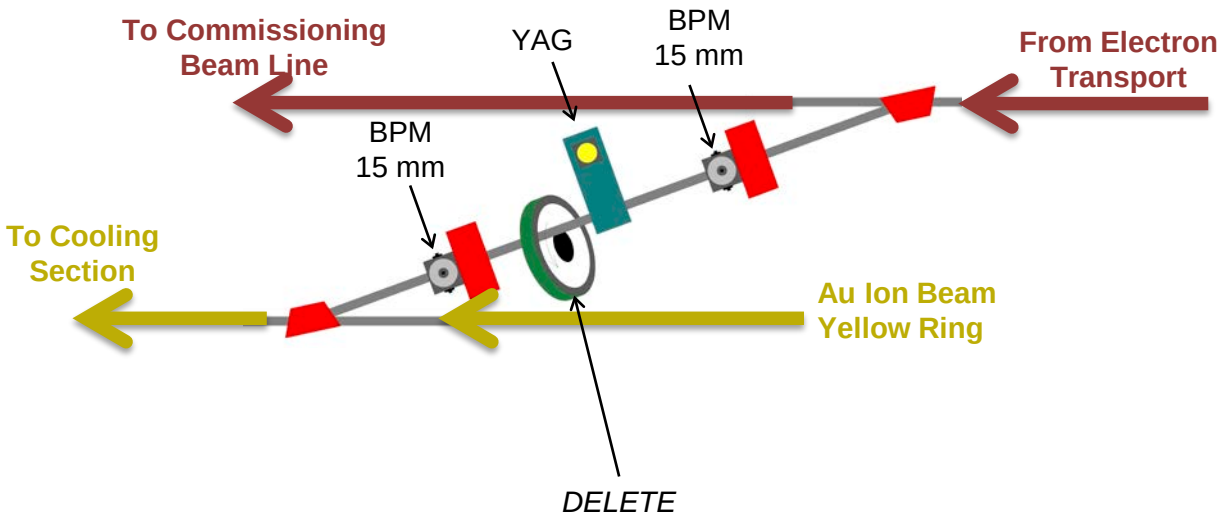

<u>e-Beam Transport</u>

BPM = 2 (9mm)

YAG = 1

Ref drawing No. 3015M0134 "LEReC Transport, Merger & Extraction"

Commissioning Beam Line - Final

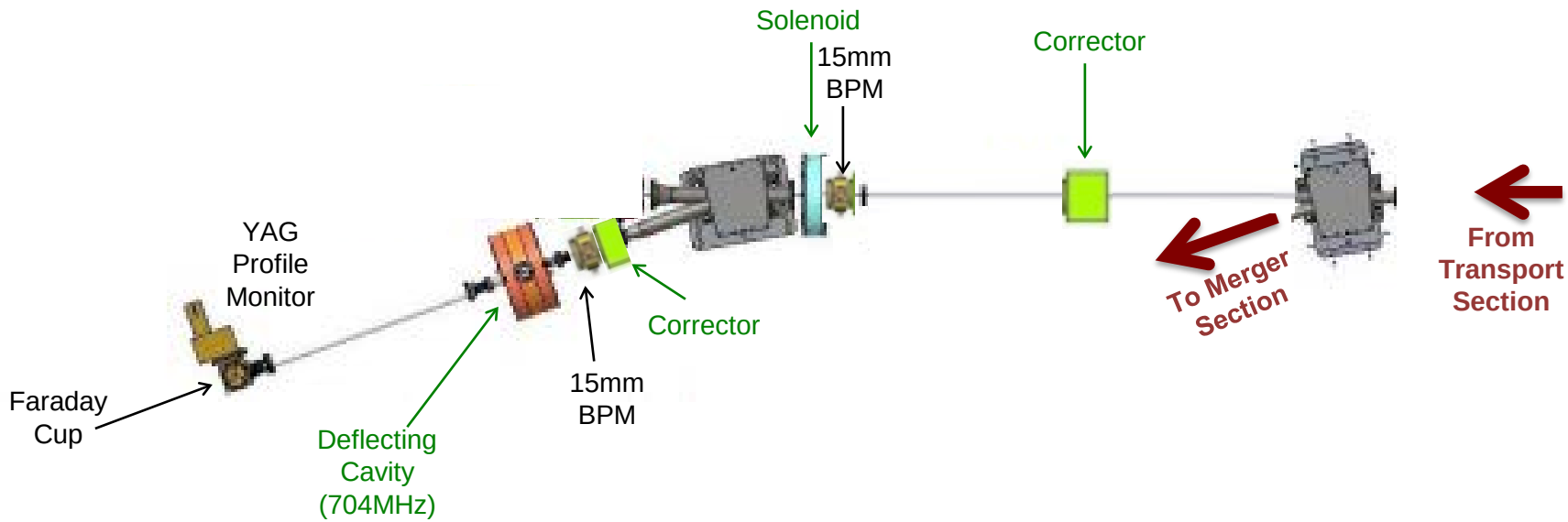

Instrument Count

YAG = 1

Faraday Cup = 1

BPM = 2 (+1 in transport)

Correctors = 2 (+1 in transport)

Ref drawing No. 3015M0137 "LEReC Diagnostic Beam Line"

Scope: Cooling Sections

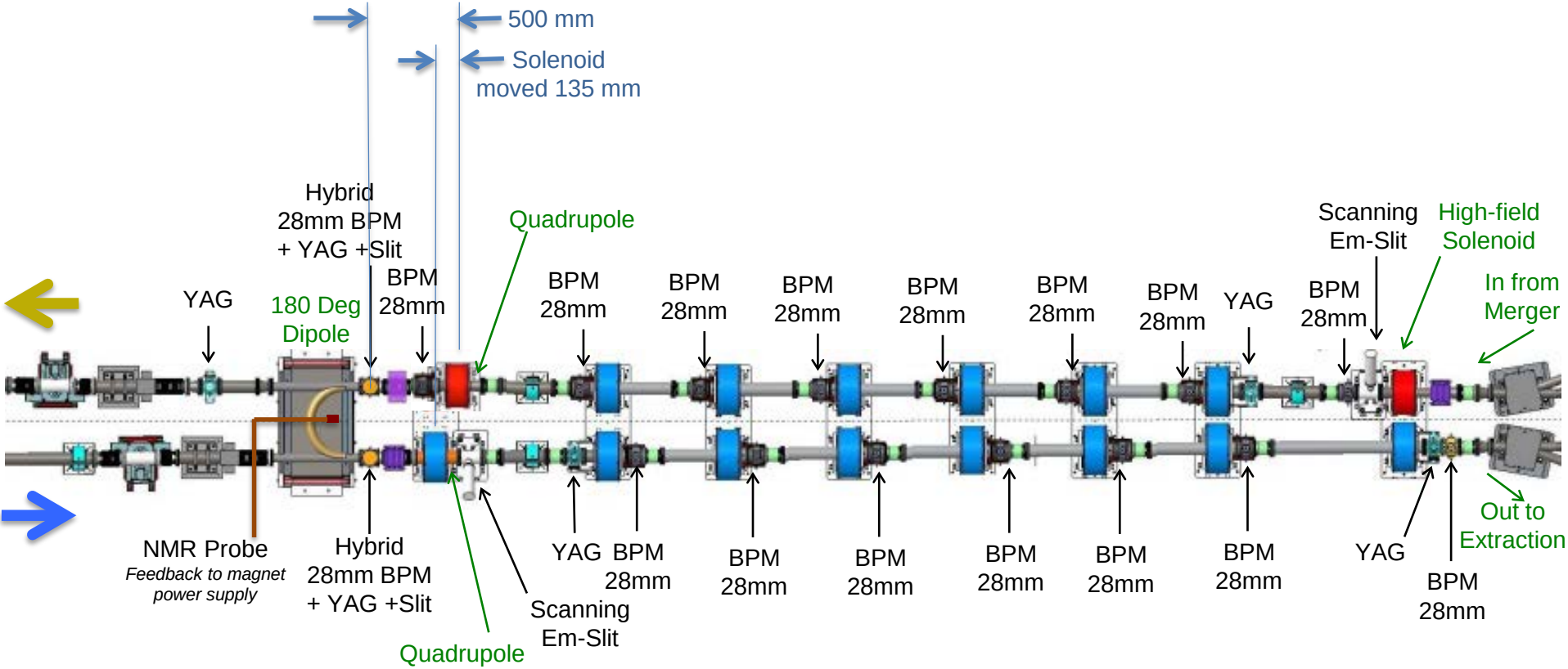

Cooling Sections

BPM = 17 (28mm; 15 dual plane chambers) *Purchased 18, 14 installed as of 3-17-16*

YAG = 6

Scanning Em-Slit = 2

Energy Spread Slit = 1

Axes of Motion = 2 (for scanning Em-Slits)

NMR Probe = 1

Ref drawing No. 3015M0133 "LEReC Cooling"

Scope: Extraction

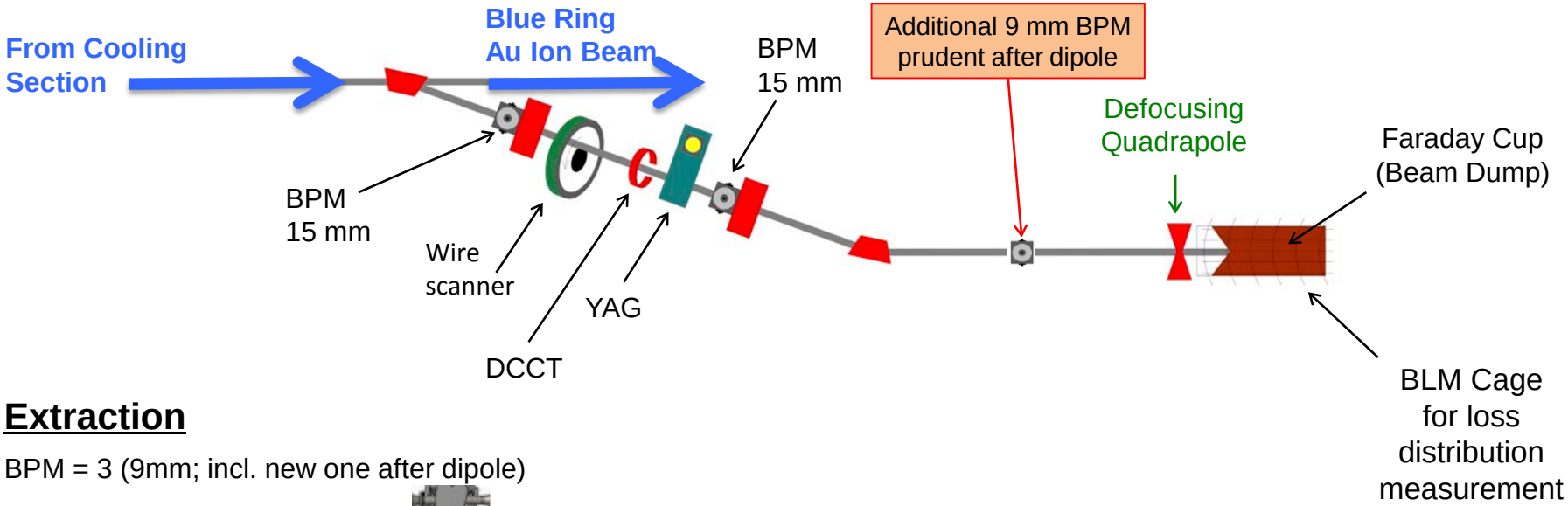

Extraction

BPM = 3 (9mm; incl. new one after dipole)

YAG = 1

DCCT = 1

Faraday Cup = 1

Wire scanner = 1

Ref drawing No. 3015M0134 "LEReC Transport, Merger & Extraction"

Main Beam Line YAGs

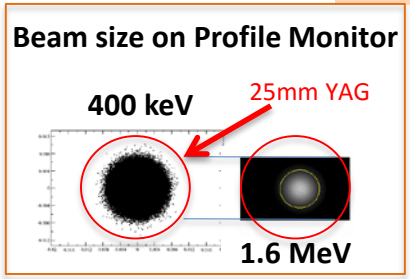

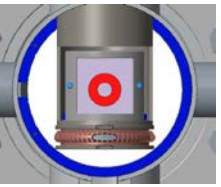

Injection Section:
25 x 15 mm YAG
Ø9.1 mm (@2.5σ)

Diagnostic Beam Line:
40 mm YAG
Ø15.5mm (@2.5σ)

Transport Section:
25 x 15 mm YAG
Ø12.5 mm (@2.5σ)

Merger Section:
25 x 15 mm YAG
Ø2 mm (@2.5σ)

Cooling Section:
45 mm YAG
Ø19 – 22mm (@2.5σ)

Extraction Line:
40 mm YAG
Ø30 mm (@2.5σ)

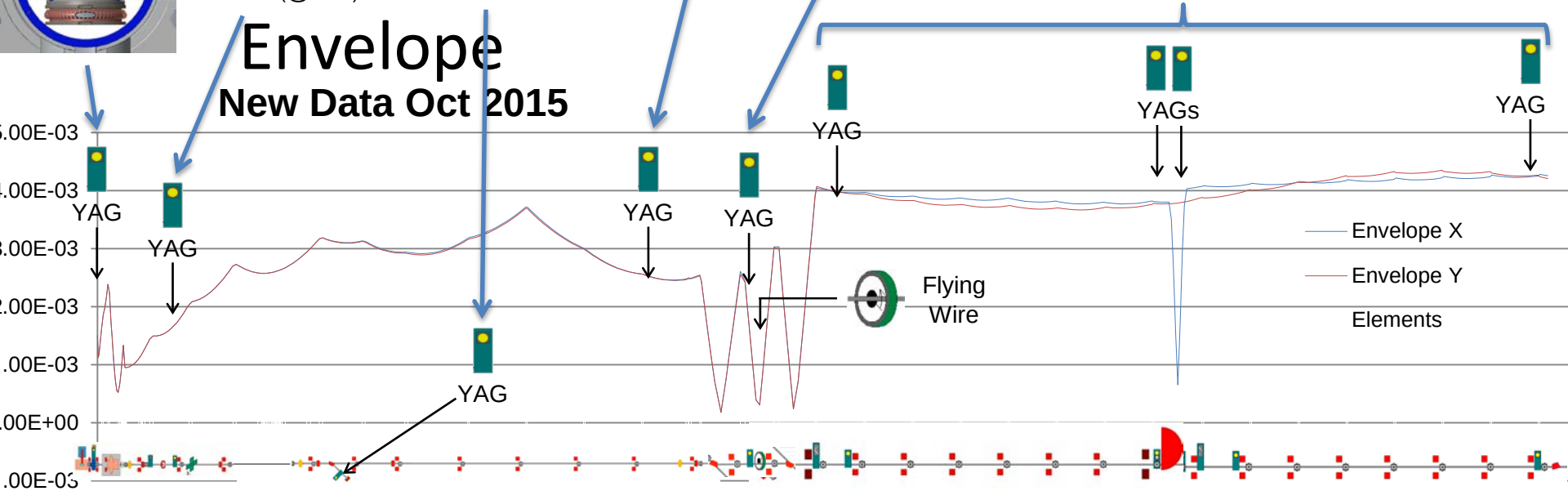

Slide courtesy of Sergei Seletski

Estimates of required MPS reaction time

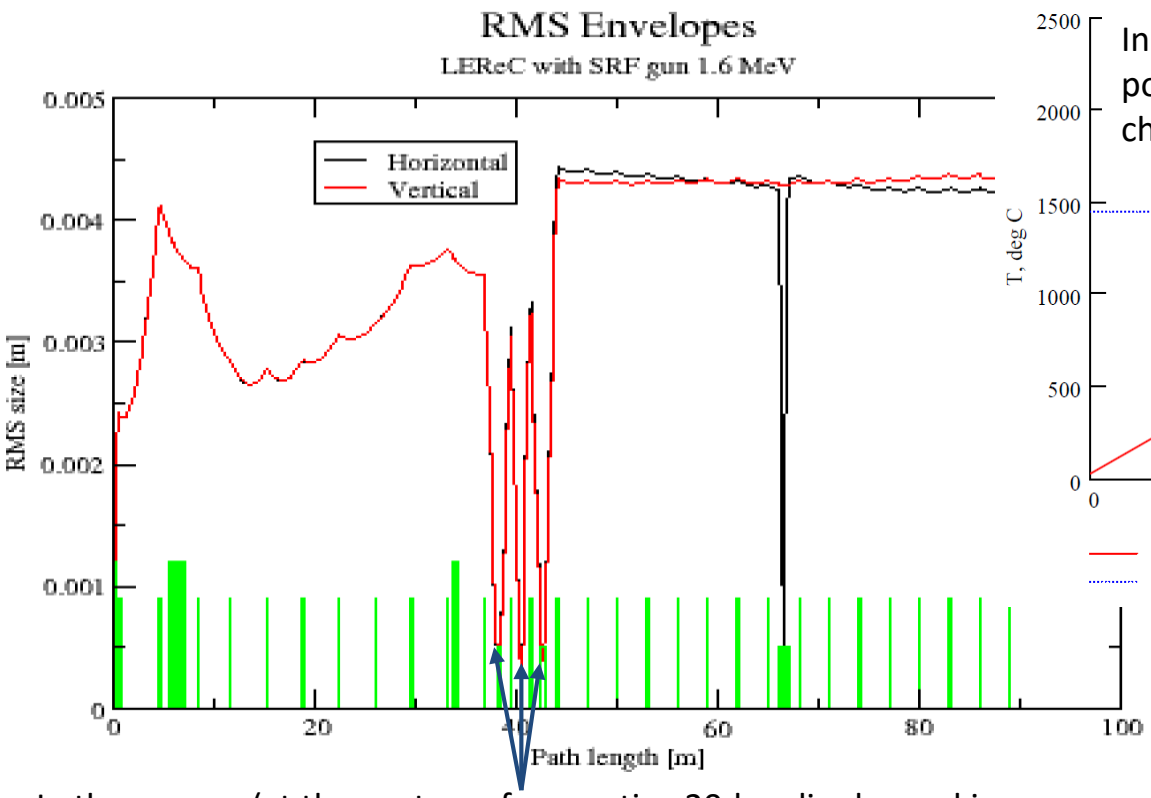

In the merger (at the centers of respective 20deg dipoles and in between 2 lenses) rms R=250 um

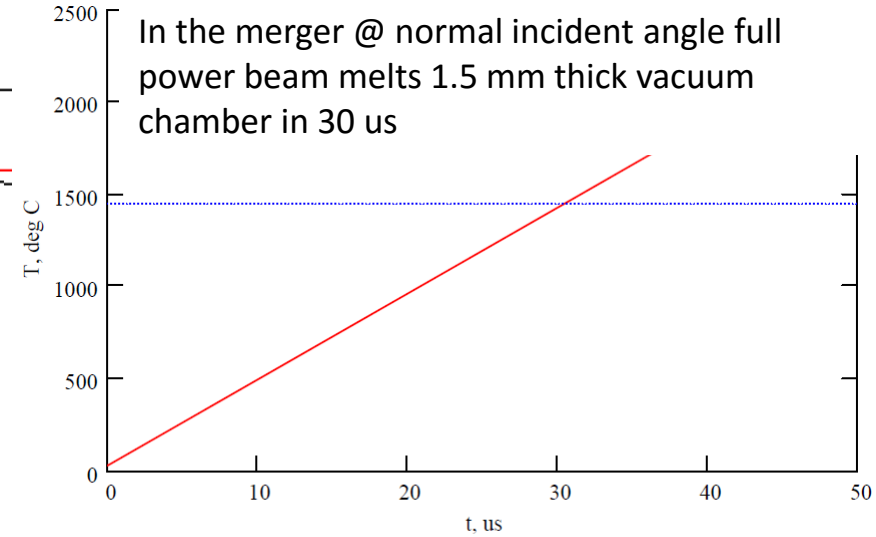

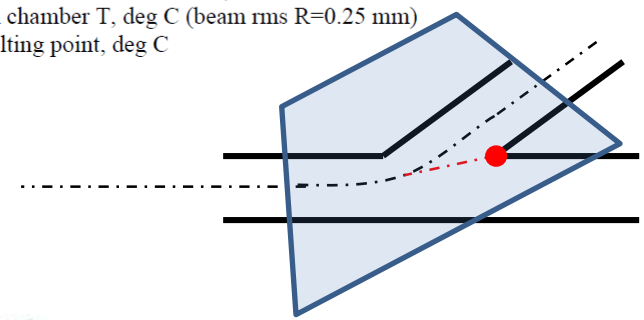

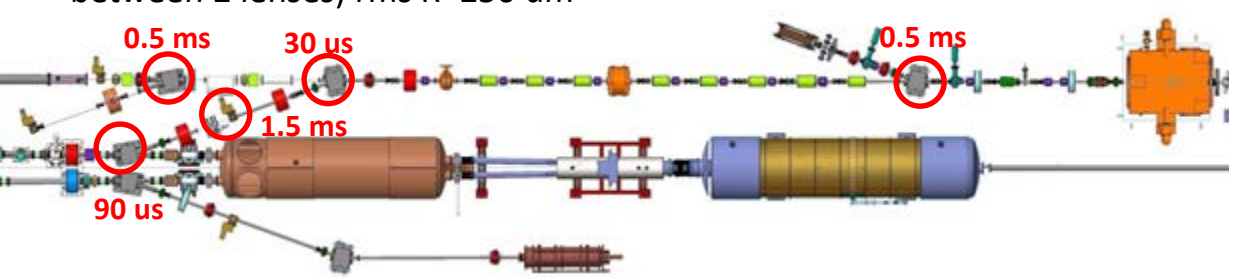

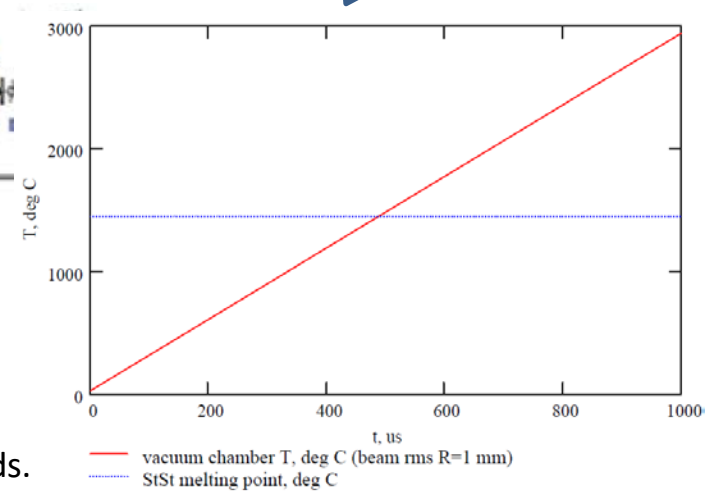

Typical beam rms R > 1 mm throughout the whole LEReC beamline.

For rms R=1 mm @ normal incident angle full power beam melts 1.5 mm thick vacuum chamber in 0.5 ms.

RF phase jump can happen in few us. Magnet fields change in many milliseconds.

Slide courtesy of Sergei Seletski

Machine protection diagnostics

- Beam Loss Monitor (BLM):
  - used at every facility similar to LEReC;
  - reaction time (~ 10 us);
  - sensitive to beam losses (according to Bruce Dunham it doesn't even matter where you place BLM, as soon as there is a small uA level loss somewhere along the beamline the BLM is tripped off);
  - will it see signal from e-beam loss in RHIC tunnel background?
- Differential signal from Fast Current Transformers (FCTs) at the beginning and at the end of the beamline:
  - fast reaction time (~ 1 us);
  - is it accurate enough at nominal current (35 mA) ops?
- BPM with predefined beam position envelope (closes laser if beam trajectory deviates from BPM center by more than allowed):
  - Reaction time (~ 12 us);
  - Works in the whole range of machine parameters.

Slide courtesy of Sergei Seletski

Commissioning, operation and machine protection

Mode of operation	Goals	Parameters	MPS
Pencil beam (2016-17, E=400 keV) (2018, E=1.6-2.6 MeV)	Roughly get beam energy and trajectory through the whole machine; find any rough errors in RF or magnets. BPM precision 100 um.	1 macro-pulse of 30 bunches per 1 second; each bunch is 30 pC. dE/shot=2.8 mJ; P=2.8 mW; I= 0.9 nA; Worst rms R=250 um; Worst case dT=1.2 K/sec.	**None** *...but with:* • Pulse Width Limiter • Laser Power Monitor • Pulse Width Monitor
Optics studies (2016-17, E=400 keV) (2018, E=1.6-2.6 MeV)	Set the optics for the full charge bunches; measure beam emittance; measure beam envelope throughout the CS. BPM precision 100 um.	1 macro-pulse of 9 bunches per 1 second; each bunch is 130 pC. dE/shot=3.6 mJ; P=3.6 mW; I= 1.2 nA; Worst rms R=250 um; Worst case dT=1.5 K/sec.	**None** *...but with:* • Pulse Width Limiter • Laser Power Monitor • Pulse Width Monitor
High current studies (2016-17, E=400 keV)	Explore possible gun trips at up to 10 mA current; set clearing electrodes.	9 MHz trains of macro-pulses (10 bunches 130 pC/bunch) per second. P=11 kW; I= 12 mA; Worst rms R=1 mm; Worst case dT=1450 K / 5 msec.	• **BPMs** • Pulse Width Limiter • Laser Power Monitor • Pulse Width Monitor

Slide courtesy of Sergei Seletski

Commissioning, operation and machine protection (continued)

Mode of operation	Goals	Parameters (beam energy is 2.6 MeV)	MPS
RF studies (2018, E=1.6-2.6 MeV)	Fine tuning of RF system; measure energy spread.	250 us trains of macro-pulses (30 bunches 130 pC/bunch) per second. E/shot=27.6 J; P=27.6 W; I= 9 uA; Worst rms R=1 mm; Worst case dT=735 K / 250 usec.	• **BPMs;** • **Interlock 20deg merger bend** • Pulse Width Limiter • Laser Power Monitor • Pulse Width Monitor
High current studies (2018, E=1.6-2.6 MeV)	Explore gun trips at up to 10 mA current; set clearing electrodes.	9 MHz trains of macro-pulses (10 bunches 130 pC/bunch) per second. P=37 kW; I= 12 mA; Worst rms R=250 um; Worst case dT=1450 K / 90 usec.	• **BPMs** • **BLMs differential FCT signal** • Pulse Width Limiter • Laser Power Monitor • Pulse Width Monitor
Operation (2018, E=1.6-2.6 MeV)	Electron cooling	9 MHz trains of macro-pulses (30 bunches 130 pC/bunch). P=110 kW; I= 35 mA; Worst rms R=250 um; Worst case dT=1450 K / 30 usec.	• **BLMs** • **differential FCT signal** • Laser Power Monitor

Slide courtesy of Sergei Seletski

Required accuracy of fast detectors

- By combining fast detector and BPMs with beam position envelope one can relax the requirements to fast detector accuracy:

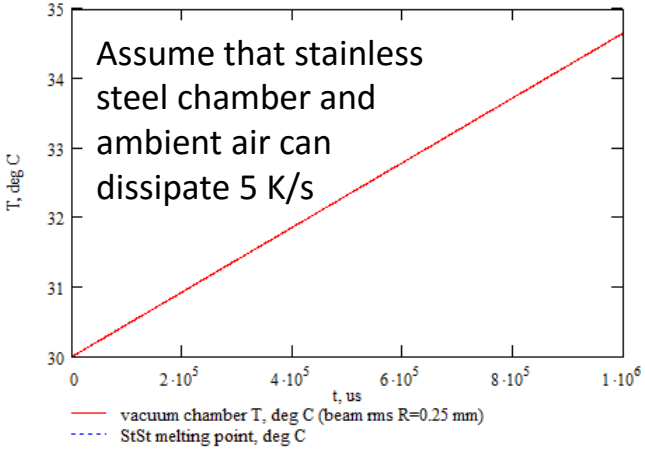

FCT1-FCT2 > 3.5 nA —~1 us→ Close Laser

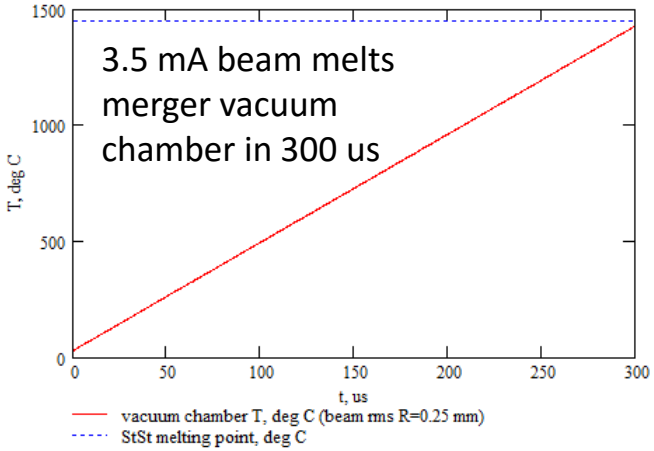

FCT1-FCT2 > 3.5 mA —~1 us→ OR

BPMs —~12 us→ OR

OR → Close Laser

Both the large losses (> 10 % of the full current) and the small losses will be detected and the laser will be closed in timely fashion.

Slide courtesy of Sergei Seletski

Conceptual design of fast MPS

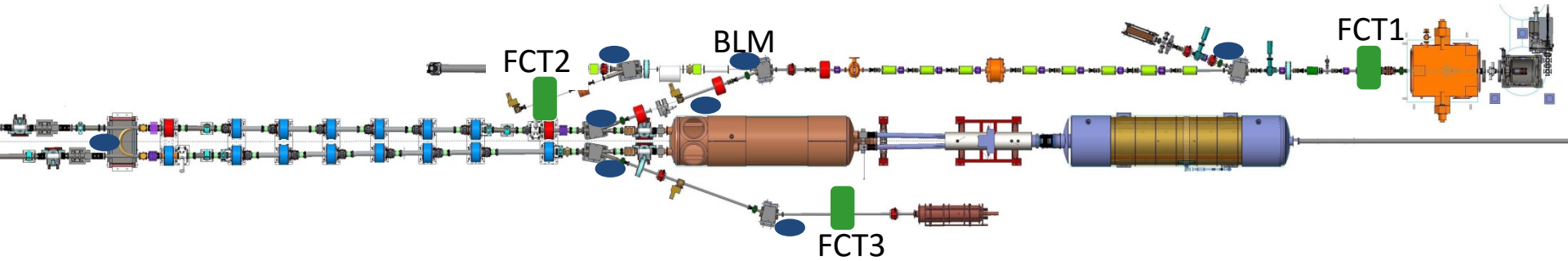

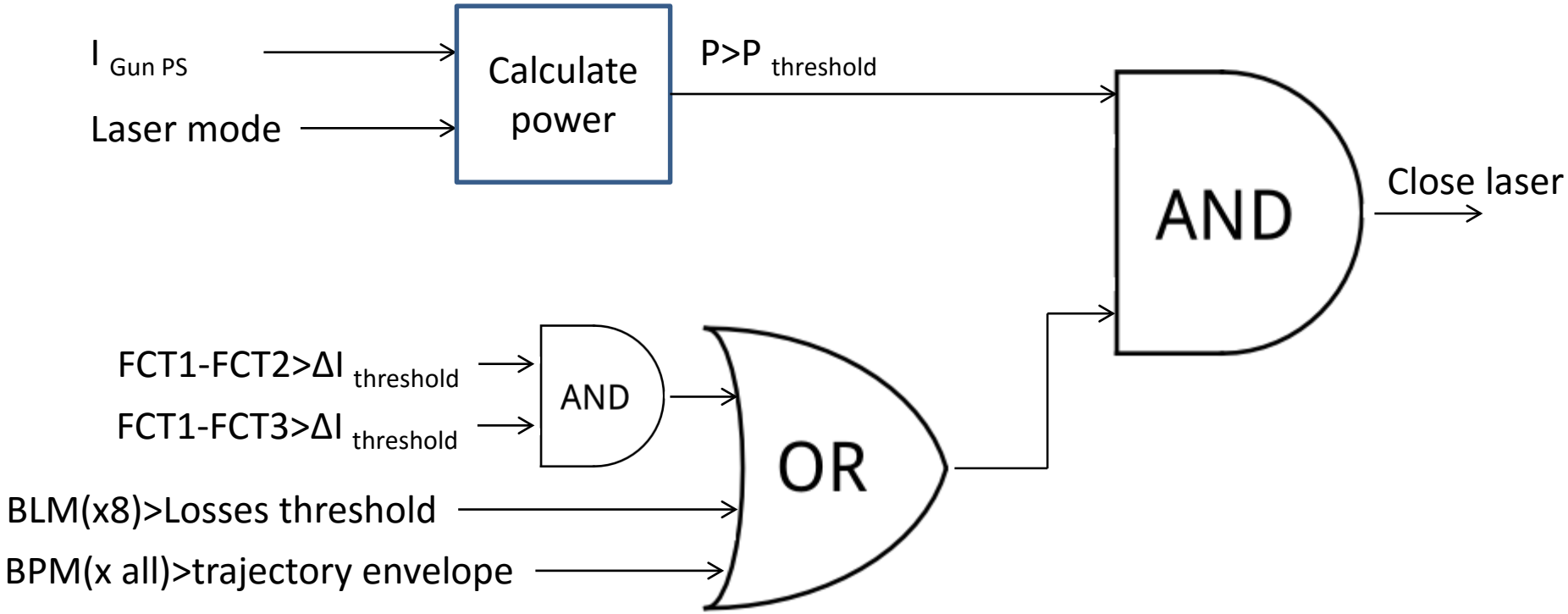

Gun Profile Monitor

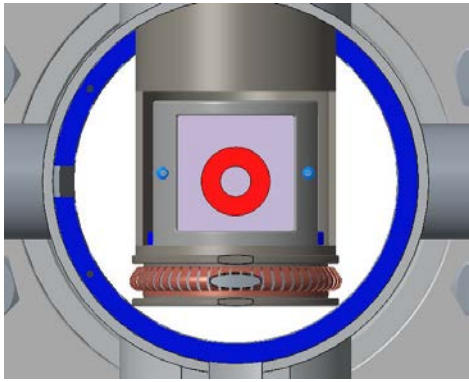

- Profile monitor (insertable YAG)
  - 19x19mm
  - Isolated for FC pick-up

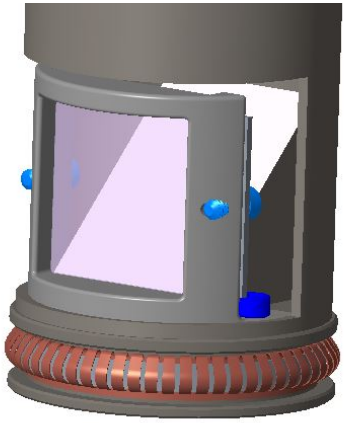

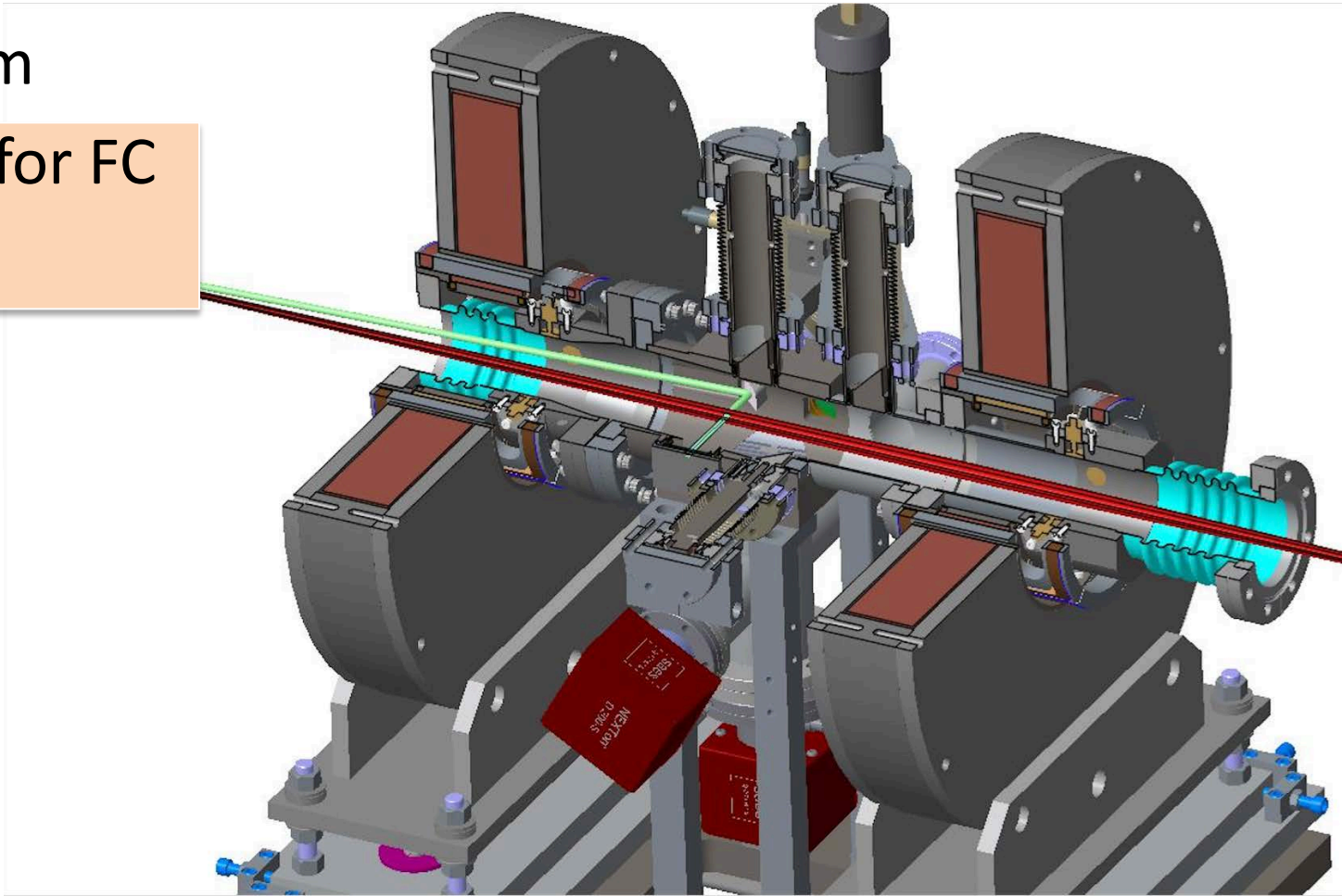

Emittance Measurement: Multi-Slit Mask in Injection Section

- Low Power Operations Only
- New Dual axis design for Horizontal & Vertical measurements chosen for $4k additional for new actuator.

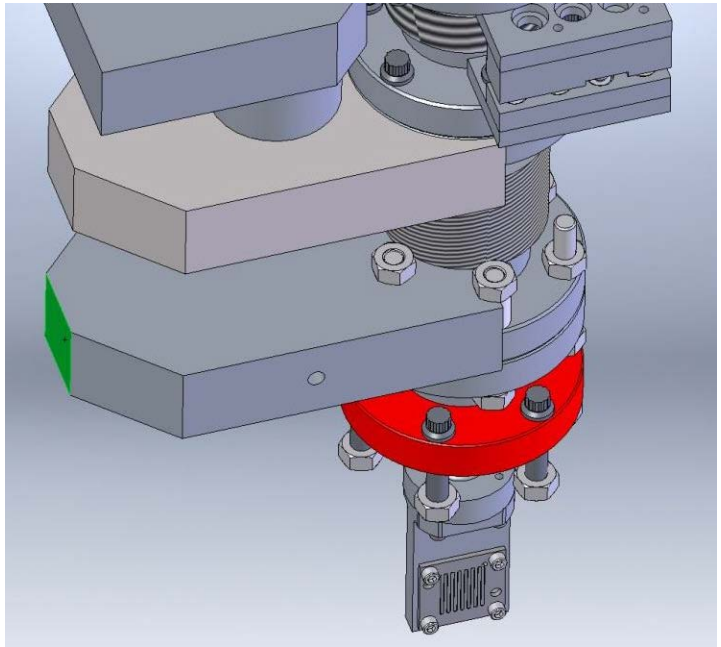

- With 0.15 mm slit width, 1.35 mm spacing, 2 m drift space, the multi-slit emittance measurements for all three energies are shown below. The configuration was optimized for 1.6 MeV, so the simulated case is the best we can do.
  - The 2.6 MeV case can be improved by tweaking the optics for measurement. So the question really is whether the results for 1.6 MeV acceptable or not.

- 400keV:
  - Sampled emittance: 0.4645421519
  - Measured emittance: 0.465225796886

- 1.6 MeV:
  - Real emittance: 0.494318572037
  - Sampled emittance: 0.436725472594
  - Measured emittance: 0.344614966128

- 2.6 MeV:
  - Sampled emittance: 0.259566040594
  - Measured emittance: 0.331353306057

BPM Pick-Ups

- Buttons easier to implement than striplines
- 15mm offers ~2.7X signal than 9mm from ERL but cost ~$30k more
- In-Tunnel Testing:
  - RF output filter boards
  - 707 MHz filter and 40 dB amplifier board
- Chambers: 20 x $1190 = $23,800 (only budgeted for 10 in estimate!)
- 20 BPMs with 90 15mm MPF buttons = $44,640 {budgeted $36k in the estimate)
- Total: $68,440 (budgeted$49k in estimate)

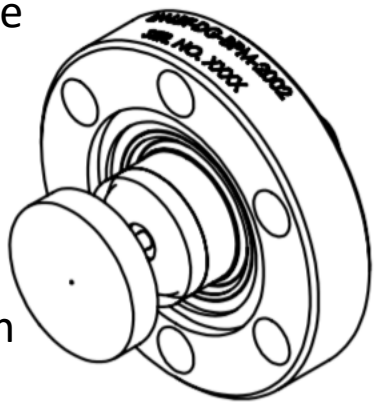

MPF, Q8425-2

- **Peter's Homodyne (baseband receiver) approach to BPM electronics**

Ion Clearing

- Use of BPM buttons in the Gun-to-Booster is planned
  - Update to model pending availability of space
- Installation of long thin HV wires
- Cornell experience: 5us gap every millisecond
  - Physicist must estimate required timing

Ion Clearing

From: Bruce Matthew Dunham <bruce.dunham@cornell.edu>
Date: Monday, February 22, 2016 at 1:28 PM
To: Toby Miller <tmiller@bnl.gov>
Cc: David Gassner <gassner@bnl.gov>, "Fedotov, Alexei" <fedotov@bnl.gov>, "Minty, Michiko" <minty@bnl.gov>, "Seletskiy, Sergei" <seletskiy@bnl.gov>, "Kayran, Dmitry" <dkayran@bnl.gov>, "Blaskiewicz, Michael M" <blaskiewicz@bnl.gov>, "Kewisch, Jorg" <jorg@bnl.gov>, "Pinayev, Igor" <pinayev@bnl.gov>
Subject: RE: limitation in DC gun performance mitigated by ion clearing

[if gte mso 9]><xml> <o:shapedefaults v:ext="edit" spidmax="1026" /> </xml><![endif][if gte mso 9]><xml> <o:shapelayout v:ext="edit"> <o:idmap v:ext="edit" data="1" /> </o:shapelayout></xml><![endif]
Well, we recently did runs with just the gun, 350 kV, 1300 MHz laser rep rate. We were attempting to study what causes the system to trip off during high current runs. In the past, we would have a trip once every few hours, but could not figure out the source of the problem (RF or gun).

With just the gun, we still experienced trips (typically due to gun power supply overcurrent limit), sometimes as much as every 20 minutes. We then applied voltage to a clearing electrode, just downstream of the second solenoid after the gun, and then we could run for much longer periods of time. We did one continuous run of 24 hours without a single beam trip, at 20 mA.

We could also use clearing gaps (in the laser beam), to achieve similar results.

Above 40 mA, we had more trips, and the clearing electrodes did not seem as effective.

We still puzzle about the exact cause of the gun trips. I don't see how a burst of ions could cause the problem. Maybe some strange positive feedback? Or perhaps, dust is getting ionized, trapped in the beam potential, and making its ways back to the gun – a spec of dust on the electrode could cause the gun to trip.

In the new gun, one can bias the anode to reject ions from outside of the gun, which should help. In the real beamline, the RF/SRF cavities may help to block dust/ions.

If it is dust or particle related, you should plan on taking extreme measures during assembly to keep everything clean. I will certainly be more careful than usual during our rebuild now.

Bruce

NMR Probe for 180° Dipole feedback on magnetic field

- NMR Probe
  - 170 Gauss, 20 milligauss noise, without any signal processing,
  - NMR reading at 10 Hz
  - Tests underway
    - signal processing planned to improve resolution
    - Lengthen probe & bend away from beam plane
  - Still waiting on proposal for integrated power supply

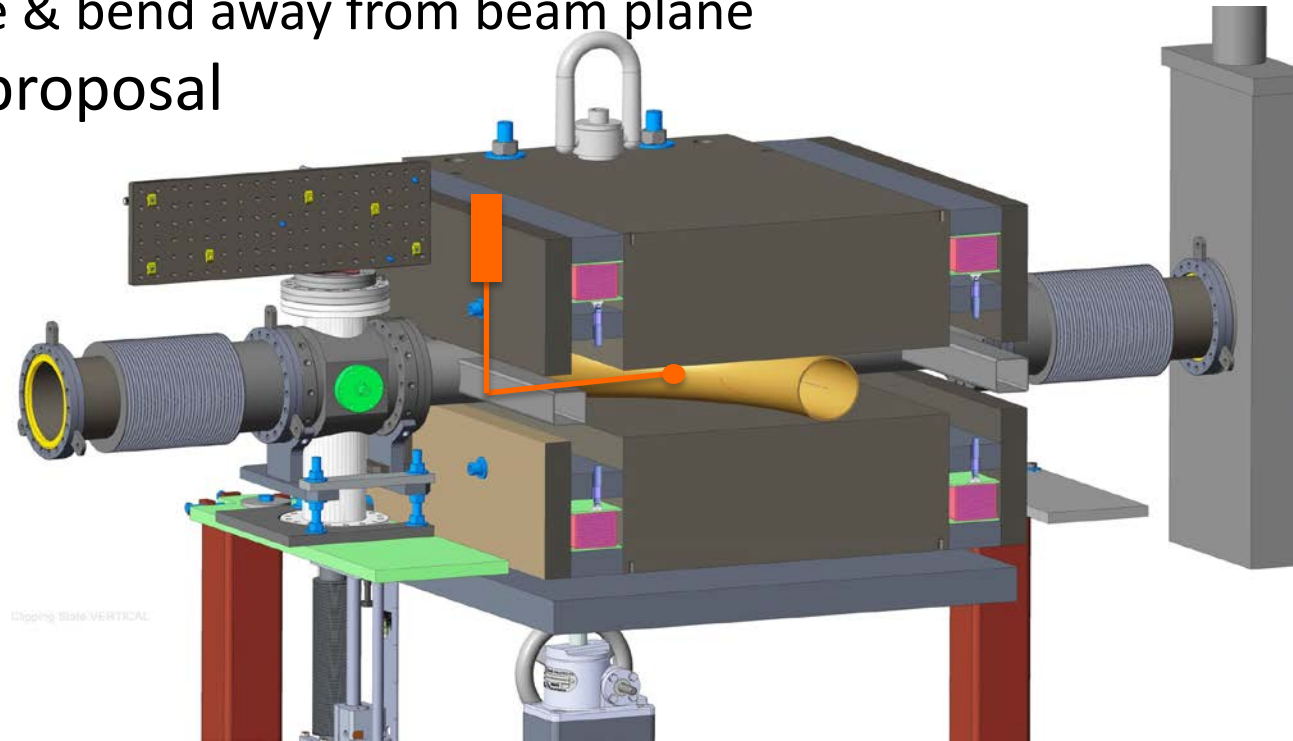

Profile Monitors – YAG Scintillator (Low Power Only)

5 Stations from ERL
- Radiabeam product as per BNL specification
- For 2.38"ID beam pipe
- Dual screen/slit (3 of 5)
  - 100μm YAG
  - OTR (Al/Si)

New Stations in Cooling
- Low Impedance Design
- Al coated, 100μm YAG
- 45mm aperture
- Cu mirror @ 45˚
- Ferrite compensated

New Designs (YAG)
- (1) Injection Laser Cross
- (1) Long. Phase Sp. Mon.
  - Fixed position
- (1) Electrostatic Energy Spectr.
  - Scanning position

Drawings Courtesy Radiabeam Technologies

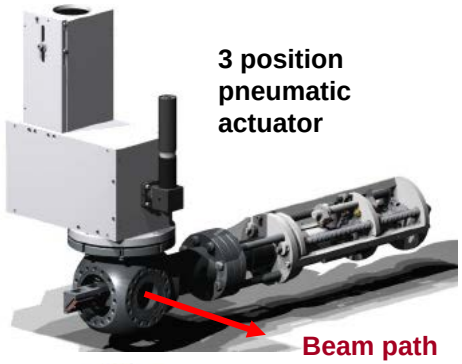

25x15cm

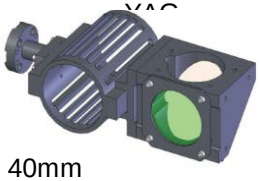

40mm YAG

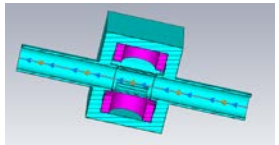

Ferrite Compensated

Transport:
- *Preparing model of existing chambers with ferrite for PS modeling
- *May have to design new chambers

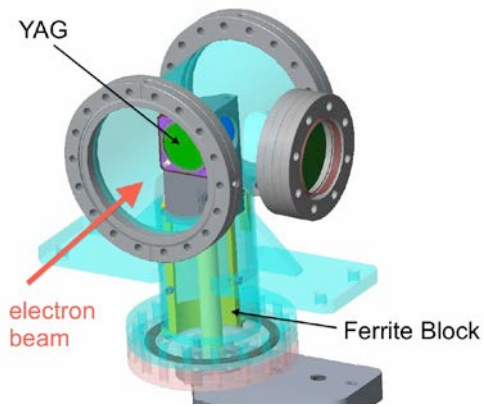

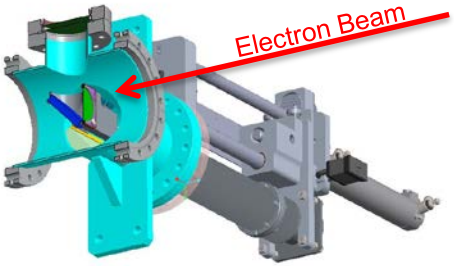

Cooling section:
- *3 chambers in, 2 out
- *No ground contacts installed: searching for retrofit options

High Power
- Compact offset cam design
- 9 μm carbon fiber @ 20 m/s
- accelerate/coast/decelerate
- PMT detects X-rays generated by the scattered electrons

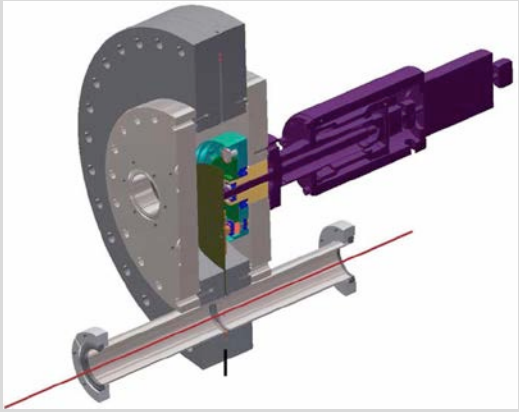

Photo courtesy of B. Dunham, Cornell

Transport Line Profile Monitors

- ERL PM chamber mods for LEReC transport
- Simulations pending

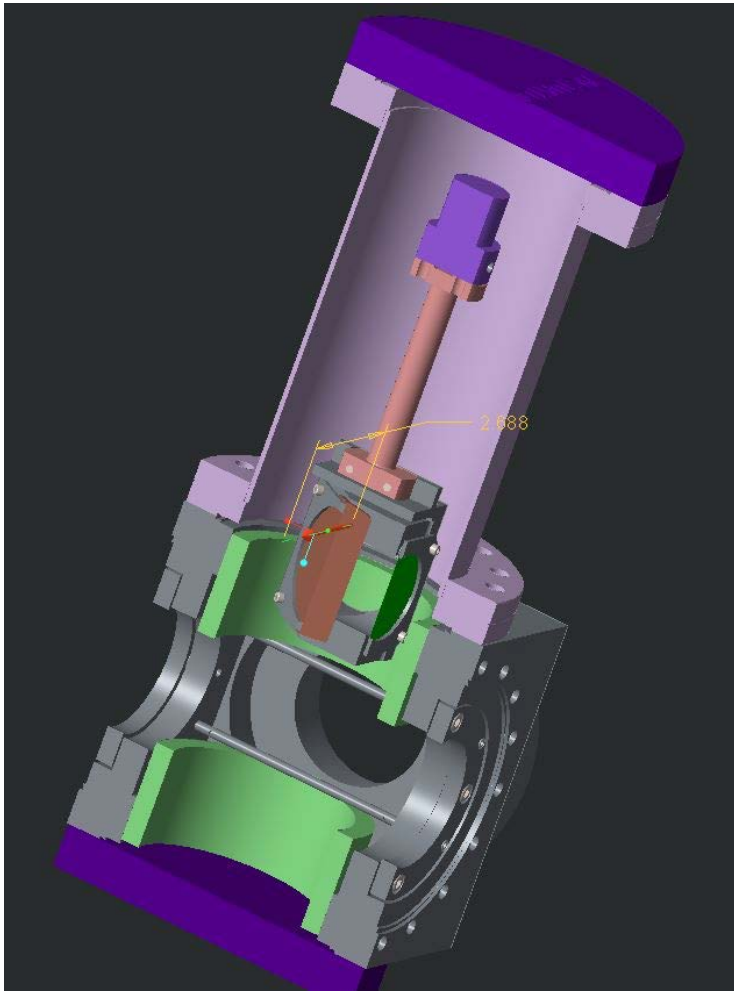

Cathode Inspection

- Inspection through laser exit port
- Optics: ~12” x 18”
  - 2” Mirror with aperture
  - 2” Dichroic mirror
  - 2” turning mirror
  - 2” turning mirror
  - Collimated light source
  - Camera & Lens
  - Laser power sensor

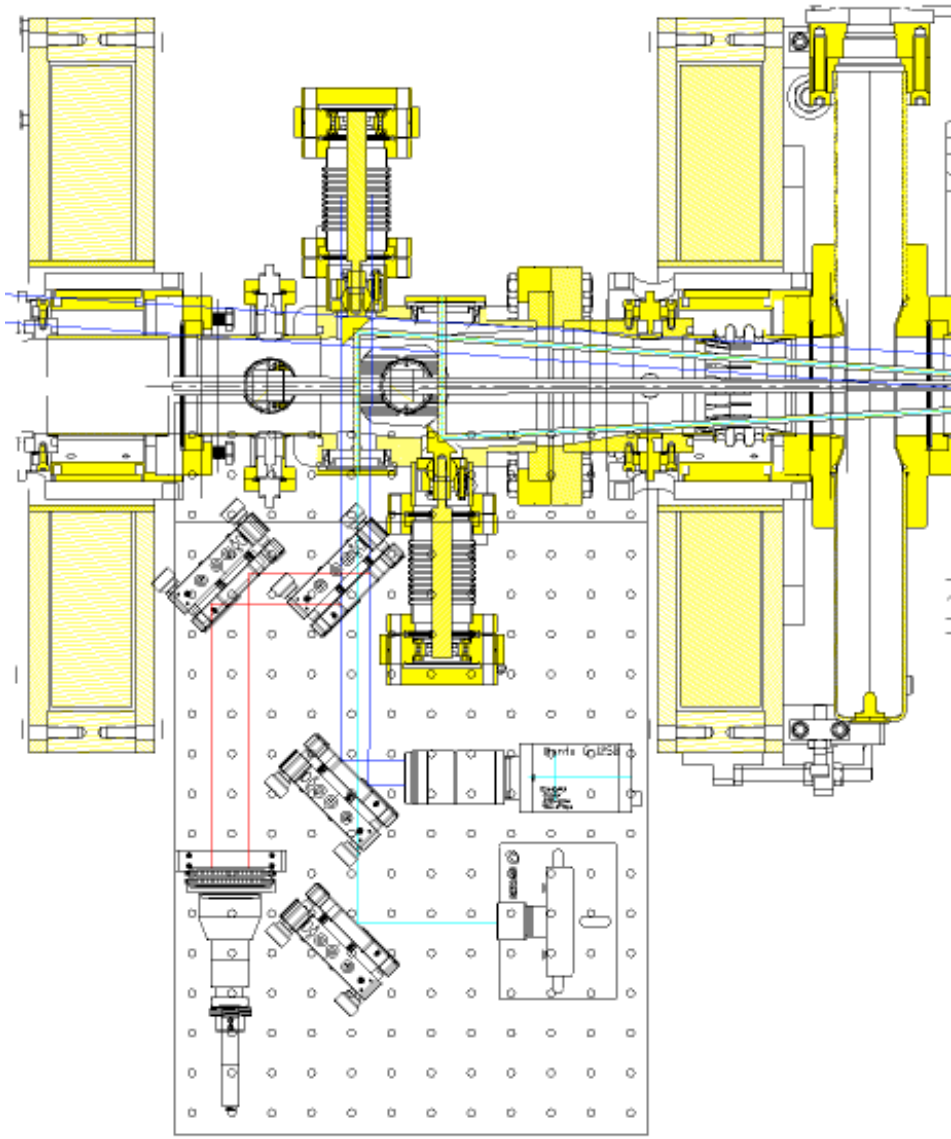

Notes from this meeting (5-12-16)

- **MPS**
  - Six beam modes were identified in slides prepared by Sergei S., the first three of which pertain to the Gun tests this year.
  - The first two beam modes will involve a beam power below that which requires MPS <u>for fast beam loss protection</u>; however, limiting & monitoring circuits (perhaps part of the MPS) ARE required to ensure such low power and shut down if higher power is detected. These include the following:
    - Pulse rate limiter
    - Pulse integrating/counting monitor *(or pulse width monitor)*
    - Laser pulse power monitor
  - All slow MPS protection from subsystem summed signals will be required.
  - The third beam mode provides for a power requiring machine protection based upon BPM limits in addition to the above limiter & monitors.
  - The next step is to choose an approach to monitor the laser pulses in an attempt to shutdown if more laser pulses reach the cathode than that which is commanded by the timing system. This will be a group effort between physics, RF, instrumentation & controls.

- **Beam & Machine Modes**:
  - There is a need to identify all the possible machine modes. Machine mode is defined by all places the beam could be allowed to propagate to, such as: profile monitors, scrpaers, faraday cups, beam dumps, gate valves, etc.
  - In addition to the six presented beam modes, other RF, laser, and instrumentation testing beam modes must be identified, documented and added to the integrated Beam & Machine mode protection logic in the MPS.
    - For each machine mode, there will be a set of allowable beam mode based on the power and radiation limits for the target device in that machine mode. The MPS will need to shut down the machine if it detects a beam mode that is not allowed for the currently detected machine mode.

Notes from this meeting (5-5-16)

- **Beam Loss:**
  - **BLMs**: We need to make a BLM study of PMT signal background during a RHIC store based on the logged BLM data from the CeC experiment.
  - **BPMs:** Using the sum signals from the BPMs may be challenging as the bunch length varies along the beam line changing the response of the sum signal. Individual calibration factors could be assigned but this increases the complexity of the system.
    - Perhaps using the d/dt of the sum signal could provide a more reliable indication – looking for fast changes instead of slow changes.
  - **Reaction Time:** Recent beam loss estimations by Sergei Seletski based on beam size and melting of SS predicts a 30us response time in the merger (where beam sized ~250um rms) and 500us response time everywhere else in the machine.
  - **Layout:** Beam loss protection needs to be concentrated around the merger section
  - **Current Meas:** We need to investigate the sensitivity of the FC signal from the dump to compare with other current measurement techniques (i.e. ICT, Gun HVPS, BPM-sum, etc.)
- **ICE:**
  - **SHV vs SMA:** The plan to redesign the ion clearing electrodes (ICE) with SHV feedthroughs was canceled due to the need for the electrodes to maintain a 50 ohm impedance. Thus, the SMA connectors on the feedthroughs will be enclosed in a box requiring a tool to open and labeled with Danger HV labels.
    - **Bias Tee's:** The electrodes will also need a coupling capacitor and 50 ohm load to properly match to button at the high beam freqencies. This might be mounted inside the protective cover over the SMA feedthroughs.
    - We plan to use a single bias supply and power the two electrodes in parallel.
- **Cooling Section Energy Measurement:**
  - The solenoid cab be repositioned to give 500mm between BPMs instead of the suggested ~800mm as the improvement is not significant enough.
- **RF Cavity Installation:**
  - Having 2.1GHz cavity installed could be useful at low current for experiments with beam. Current philosophy is to commission it off of the beam line.
- **Dump B/L Design:**
  - Although the design of the high power dump line is not complete, we may add two quads from ERL to control beam size to fit on the 40mm YAG.

Notes from this meeting (4-21-16)

- **Cathode current monitor**
  - Mike C. & Don B. are working on this with direction from Bruce Dunham & John Dobbins.
  - Will not be fast enough to protect YAG PM
  - May NOT have sensitivity any bettern than 100uA... Under investigation
  - YAG PM shall be protected by laser pulse length limiter
  - Really need to by FCT and install in Gun-to-Booster area!
- **Energy Spread Measurement in Cooling Section**
  - P. Thieberger is working on determining required drift length to additional BPM for angle meas.
  - Jorg will then rerun optics and work on dynamics simulation to determine width of tungsten slit
- **Additional BPM & corrector at the end of the Transport**
  - not needed; deleted
- **Gun Test BPMs (4) swap with merger (2) & extraction (2) BPMs for 200C bakeout**
  - Discussed and agreed upon.
- **Profile Monitor screen sizes**
  - 1st PM screen (15x25mm) after booster needs a larger size to accomodate 400keV beams
  - This ERL HEPM is being redesigned with the CeC YAG holder (25mm round)
- **Diag. B/L beam dump(s)**
  - Design of beam dumps or faraday cup type flanges needs to be addressed... Not covered in this meeting...
- **Emittance measurement component placement**
  - Update from Chuyu on optimization of lattice to support measurement showed a good measured emittance for400keV but poor for 1.6MeV due to nongaussian beam parameters
  - Tungsten mask (1mm thick): 0.15 mm slit width, 1.35 mm spacing (~15 slits), 2 m drift space to PM
  - 400keV measurement not possible without solenoid where booster will be. Jorg will rerun simulations to move this solenoid to coexist with the booster.
  - A final decision will be taken next week after review of Jorg's new simulation data
- **Ion Clearing Electrodes**
  - Power Supplies need to be defined... Not covered in this meeting...
- **ICT & DCCT Shield**
  - DCCT drawings are ready
  - ICT shield design being simulated by Peter T.

Notes from last meeting (4-14-16)

- The status of the instruments planned for the Gun Test Beam Line installation this fall were presented as follows:
  - Profile Monitors:
    - GtB: New design, model nearly complete, finalizing YAG crystal holder details, drawings not yet started
    - Injection: ERL HEPM type, redesigned model shows acceptable impedance simulation results, ME review needed, **Larger YAG screen & Holder now required**, drawings not yet started.
    - Injection Diag. B/L: ERL LEPM type, minimal redesign of in-vacuum components, model nearly complete, needs ME review, drawings not yet started.
  - Emittance Slit:
    - new design needed (new chamber, slit mask & pneumatic cyliner), need designer time.
  - Halo Mon:
    - in inj. diag. line, needs aperture spacing from Dmitry, needs new chamber, assigned to engineer & desinger
  - DCCT:
    - shield design complete, satisfactory impedance simulations results, drawings nearly ready
  - ICT:
    - shield design complete, impedance simulations underway…
  - BPMs:
    - Drawings in checking for 15mm buttons, and 9mm & 15mm chambers, procurement spec written, order pending
- Emittance Measurement:
  - Chuyu presented his simulations for the emittance slit measurements, multi-slit vs. single slit with scanned beam. Operational beam parameters were used for the study but can be optimized for the emittance measurements. This will likely result in the satisfactory performance of the multi-slit measurement at all three energies. Jorg will redesign the optics for the 1.6MeV case to better suit the measurement and Chuyu will rerun the simulation to check the measurement quality.
  - One concern with the beam scanning correctors was the vicinity of the first corrector to the solenoid for fear that the solenoid core could corrupt the air-core corrector's field quality.
  - Also the corrector strength can be reduced by half of what Chuyu predicted by using from bipolar scanning.

Notes from previous meeting (3-24-16)

- Gun Commissioning Beam Line
  - Emittance: Jorg finished the new simulations for 1.6MeV beam and Chuyu is working on determining the drift distance range between the PM and emittance slit in the Gun commissioning beam line.
  - Cathode Imaging: Vladimir's requested was discussed, with agreement, to change the cathode imaging camera to a color camera in order to better resolve the laser light from the background on the cathode. This was requested for CeC and for LEReC. This will be a challenge for controls to upgrade their custom written drivers for Linux.
  - Profile Monitor: Dmitry's request was discussed for isolating the YAG crystal holder in the Gun PM so as to collect charge from the beam as a FC during early gun commissioning. This needs to be incorporated into the design.
- Transport Beam Line
  - The PM was decided to be placed just before the high field solenoid (last solenoid in the beam line).
  - The BPM and corrector added by Dmitry at the end will be reviewed by Dmitry to determine if the upstream BPM is sufficient or if we really do need the additional BPM in this line.
- Diagnostic Beam Line
  - A study to determine the exposure limits of the YAG crystals was made. Tests at eLens demonstrated linear response of YAG up to 1200us DC e-beam pulses of 97mA @ 5keV. This resulted in a calculated ΔT=66K. Repeated shots of 250us long macrobunch trains of 130pC/bunch @ 1.6MeV in LEReC results in a similar ΔT if pulse rep rate is limited to 10 seconds.
  - Thus, we can remove the kicker and beam dump from the design; however, the optics of the PM's require optics an upgrade with a" tilted lens" to image the YAG crystals at 45° due to the limited depth of field. (~$2500 per PM)
    - Question: will this be required for all 3 PM's in this line or only the one downstream of the deflecting cavity?
- Cooling Section
  - The energy spread slit width calculation will be DELAYED as considerable work in coordinating optics and simulations is required before confirming the 135mm move of the solenoid. This will be delayed until after efforts let up from designing the Gun commissioning line.
  - Alexei announced that no cooling section devices will be installed this shutdown to allow time to prepare for the Gun commissioning beam line. All cooling section device installations will be delayed until next year's shutdown.
  - The placement of the two quadrupoles will also be delayed until proper optics & simulations can be made and reviewed. In any case, they need to be placed on the side of the solenoids closest to the 180 degree dipole.
- Dump Beam Line
  - Karim's current layout only shows one solenoid and two quadrupoles and one dipole. This does not agree with previous layouts.
  - Our current instrumentation estimate includes 3 BPMs (assuming two solenoids before the dipole).
  - Final optics of the extraction line are yet to be completed. Jorg explained that the beam makes it into the dump without any solenoids in the extraction line.
  - The possiblity of installing the high power profile monitor (scanning beam technique) in the extraction was discussed but eventually CANCELED all together due to the added complexity of optics required in the extraction line to maintain beam quality through the extraction line in order to support a proper profile measurement.
    - We will rely on the YAG PM in the extraction line to measure the high power profile with single macro bunches only.

Notes from previous meeting (3-17-16)

- Diagnostic Beam Line
  - No reductions in the beam line plans. The question of need for the Longitudinal Phase Monitor was discussed and explained again that it is required in order to set up the RF cavity responses so that the beam parameters of a single macrobunch will be equivalent to a train of macro bunches. Work is underway to prepare the estimate for the DOE review.
  - Discussed eiliminating the fast kicker & dump and expose the YAG to the full 260us of macro pulses.
    - Suggested to remove the mirror and tilt the YAG crystal at 45 degrees.
      - This would require a special tilted lens optical system to compensate for the limited depth of field over the tilted YAG screen
    - Suggested that we study the YAG exposure limits
  - Need to see simulation, calculations & design of kicker beam dump
    - Proposed to use a sawtooth beam dump surface to for normal incidence angle
    - Scattered electrons will propagate down beam line and flood instruments during kick.
      - Does kick angle need to be much greater to get beam out of the beam line?
      - Will gating the camera effectively ignore the shine before the measurement?
- Emittance Slit System
  - Solenoid shown between PM & slit.
    - Solenoid planned to be turned off for measurement
    - Demagnetizing cycle of the solenoid will likely be required
  - Drift distance and component layout
    - Jorg & Chuyu completed the emittance slit study for 400keV.
    - Jorg is still working on extracting the beam parameters of the 1.6MeV case so that Chuyu can calculate the final drift distance between PM & Emittance slit in the Gun Commissioning Beam Line.
    - It was unclear what the drift distance depends on – should be insensitive…
- High Power On-Line Profile Monitor
  - Needed only in the extraction beam line, because the bunches see different focusing from ions due to relative positions wrt the electon beam. This will help to set the solenoid strengths.
  - Using only one fast magnet may be acceptable since beam in defocused by the quad just before the dump. Plus we don't care about sextupole components in kicker magnet field. However, be ware of the radiation from the dump interfereing with the profile measurement (no PMT - must use electrical signal from the wire).
  - M.B. suggested adding quadrupole to this for an added emittance measurement.
- Beam Line Layout
  - Still need to determine the placement of the PM at the end of the transport line, before the merger.

Notes from previous meeting (3-3-16)

- Emittance Measurement
  - Most of the meeting was consumed by a debate over the Gun test beam line emittance slit measurement technique of fixed slit & scanning e-beam vs. scanning slit vs. multislit.
  - The multislit case works well at 400keV but shows 25% discrepancy at 1.6 MeV and requires 2.5m and 1m drift spaces – thus requiring two separate mask stations ($$$).
  - The final decision was taken by Alexei just after the meeting to use the ERL mask actuator, buy a new two position actuator and dual single slit mask (H + V) and use two correctors to scan the beam over the slit.
- ICT
  - It was decided that a shield needs to be designed for the ceramic in the ICT (just downstream of the booster cavity) just like what was done for the DCCT by Scott Seberg.

Notes from previous meeting (2/25/16)

- **BPMs:**

  Rob Michnoff presented the test results with the buttons, cables & electronics.
  - RESULTS:
    - Use ERL 9mm buttons in Transport
    - Install local switches & amplifiers in tunnel
    - Note that the measurements were based on 78,000 samples averaged over 1 sec.
  - Concerns:
    - Tests were made with 25mV pulse that is shorter than what is planned for. A model of the input filter needs to be made to study the expected response with longer bunches.
    - It was suggested to use a 78kHz side band around the 704MHz to avoid noise from the RF systems at the fundamental frequency.
- **Ion Clearing:**
  - Bruce Dunham confirmed in an email that ion clearing was useful in surpassing an intensity limit at ~20mA between the Gun and Booster; where the gun would trip often on overcurrent before.
- **Emittance Measurement:**
  - The ERL multislit mask will not work for LEReC. However, simulations by Chuyu & Jorg show that a mask with a 0.15mm slit width &, 2.5 mm spacing, can produce the following results for the 400keV beam:
    - Real emittance: 0.655251966295
    - Sampled emittance: 0.629857938323
    - Measured emittance: 0.623495500861
  - Further study is planned for the two higher energies of 1.6 and 2.7 MeV.
- **Laser Mirrors:**
  - Impedance due to the laser mirrors has been dramatically reduced by adding ferrite beneath the mirror.
  - There is a current debate over using brittle ferrite versus a sliding ground contact that can produce particulates.
  - Given no adjustability of the cathode surface angle, there is a risk that the reflected laser may fall outside of the range of motion of the laser extraction mirror.
  - A comprehensive study of the angle tolerance of the cathode versus the available aperture of the reflected laser through the extraction mirror is required.
  - Entry laser mirror now has all three axes of manually controlled motion (X, Y, Z) so that it can be inserted & retraced for on-axis cathode-laser tests. The exit laser mirror has only X & Y manually controlled motion.
- **Merger Dipole ripple & emittance**
  - New ripple spectral studies show that considering only the contribution from the 60Hz ripple, the emittance blow up is only 1%, compared to the previously estimated 50% increase.
  - We await a final decision on the use of the ERL 20A power supplies.

Meeting notes from this previous (2/18/16)

- Gun Beam Line:
  - Correctors will be installed every meter in Gun Test Beam Line and will need to be air core
    - Wuzheng already has a model for a design.
  - Impedance too high at the anode. Cornell has submitted a sketch of a modification they can make to taper the inner diameter of the anode.
    - Peter needs this to be added to the model to rerun the simulation.
    - Peter's model didn't have a ceramic break to support & isolate the anode. The model for PS sim needs to be updated with this.
  - Off axis beam on cathode:
    - Peter's impedance simulations have not taken this into account. This needs to be re-evaluated in the PS sim.
    - We should confirm with Cornell that their energy spread calculations DO take this into account.
  - A mock-up of the cathode imaging technique via the laser extraction port needs to be planned in order to validate the plan to remove the cathode inspection plunging mirror.
  - Laser mirrors now equipped with motorized insertion to allow for cathode testing with on-axis laser beams.
    - We need information on actuators to properly plan for the required motion control.
- Ion Clearing
  - The need for ion clearing in the transport still needs to be finalized.
    - Cornell used 5us/ms. Will 1 turn per 100 turns work for LEReC?
    - Will a design for long stretched wires through the transport work?
      - Will a bias voltage of several hundred volts be sufficient with negligible influence on the 1.6 MeV beam?
- Profile Monitors
  - The ERL PM chambers are being modeled with ferrites for use in LEReC. It was suggested to use curved inserts into the unused ports of the 6-way cubes to improve the impedance of the chamber. The model needs to be updated and resent to Peter for PS sim.
- Magnet hysteresis cycling:
  - We need to gain insight in how fast we can run a hysteresis cycle on solid core dipoles to determine if we really need a laminated core in the merger dipole.
  - Animesh's study of the multiple components in the dipoles was done at 10A where LEReC will be operated at 2.9A. Thus, the study must be repeated at our lowest operating current.
  - With the results we can decide if unipolar hysteresis cycling (as done in Animesh's tests) will be sufficient or if we need to run bipolar cycles.
  - We need to know from Don Brunoif his corrector supplies are unipolar or bipolar and what current range they are planned for.
- Commissioning Diagnostic Beam Line:
  - The design of an effective beam dump is of utmost importance. Thermal simulations thus far have been based on surface heating with a 2 degree incidence angle which does not work.
  - Peter Thieberger found that a conservative absorption depth of 1.5mm in Titanium. This will improve the efficiency of the current design. We need to have the calculations rerun with the new absorption depth to decide whether or not to further pursue the current instrument design.
  - Dmitry suggested a larger beam pipe for this line and to increase the beam size to reduce the deposited energy density in the dump.
  - Dave suggested that the kicker electrodes be made with a quadrupole component to defocus the beam and spread it over a larger surface area in the dump.
  - We still need to model the design of the kicker in PS for impedance.
  - We need a sloping transition into the electrostatic deflector's very large diameter
  - The entire spectrometer line should be shielded in Mu-Metal; however, the need for shielding on the rest of the diagnostic beam line was questionable.
- BPMs:
  - No update this week. BPM group is working on a signal response chart for AP review.

Meeting notes from previous meeting (2/11/16)

- Emittance Measurement
  - Non gaussian beam makes emittance calculation from multislit exposure difficult and relies on assumptions.
  - Debate over mechanical scanning of a single slit vs. scanning the beam (via 1 or 2 correctors) over a stationary slit (plunged in and out) resulted in favor of the scanned beam in lieu of the cost of the mechanical scanner (not included in baseline).
  - Resolution & stability of correctors must be checked. The beam scanned position can be checked using the downstream profile monitor.
- Gun Test Beam Line
  - New optics design by Jorg with additional solenoid in place of SRF Booster provides small enough envelope for all apertures.
    - Beam can be easily bent into dump on angled branch
    - DCCT can be placed anywhere
      - The DCCT was modeled with ERL beam parameters with and without the shield. This should be repeated with LEReC beam parameters. The shield design may need to be improved.
- Energy Spread in the cooling section
  - Jorg still needs to confirm if the lattice can support the move of the last solenoid in the yellow cooling section upstream by 135 mm to improve the angle measurement using the new BPM in front of the Hybrid. This has a low priority as this device installation is pushed to the 2017 shutdown.
- How to measure energy spread of a single bunch? -> not answered…
- BPMs
  - Rob still needs to think about how he will provide phase measurement suitable for Time of Flight measurements.
  - Further debate over 9mm vs 15mm buttons for the transport
    - Lesser precision requirement for the transport may not warrent buying new 15mm buttons
    - Rob hopes that less precision with 15mm buttons may perclude the need for local amplifiers
    - Peter asserts that once local switches are implemented to mitigate cable mismatches across the wide spectrum, that the addition of amplifier electronics is a small increase to cost and complexity
    - We plan to test the local switches and amplifier arrangement in the Gun Test Beam Line later this Fall.
    - We need to decide soon in order to have time to order the chambers & buttons by the Fall.
    - require further discussion between R. Michnoff & R. Hulsart with K. Mernick & P. Thieberger to work through the simulations and measurements that have been done so far. AP awaits a table of position resolution for respective BPM system configuration types so that Alexei can take a decision as a function of resolution and budget for the project.

Notes from this meeting (2-4-16)

- Energy Spread Meas.:
  Pending a lattice confirmation by Jorg, the last solenoid in the yellow cooling section may move upstream by 135mm to allow the new BPM to sit 500mm upstream of the Hybrid slit.
  - This will improve the energy spread measurement by 17% while sacrificing only 2% of cooling length.
  - This will require modification to the vacuum pipes already fab'd & installed.
  - Moving the bellows may afford some shift without changes to pipes.
- Rastered Beam Profile Monitor: Design efforts on this instrument will be stopped until AP can define requirements.
- Gun Commissioning Beam Line:
  - Beam is 29 – 38mm diameter; thus pipe is too small to for the planned dipole.
  - High power dump may have to sit at the straight exit.
    - How can we measure energy spread without a bend. However, this measurement may be pointless as the energy spread is expected to be as much as a few percent.
    - How can we measure absolute energy without the bend? Answer was to use Time-of-Flight from BPMs. -> ToF in BPM electronics still requries development.
  - How can we measure longitudinal bunch intensity profile? THz bandwidth and 1ps time resolution preclude the possibility of measuring this over long cables. Answer: NOT POSSIBLE
- BPM Buttons: There are 16 ERL BPM buttons available for LEReC. The transport from booster to dump requires all 16, plus 2 for Gun-to-booster plus two more in the diagnostic beam line. These additional 4 shall be new 15mm buttons from MPF.
  - Based on quote from MPF, buying additional new 15mm buttons for the entire transport costs ~$22k.
  - Designing only one new chamber (instead of two for 9mm & 15mm) may offset the additional cost of the ~$22k. This will be investigated.
  - Signal strength gain of ~2.7 can be had with the 15mm buttons compared to the 9mm.
  - Stripline BPMs may still be a viable option. Q/ Could this alleviate the need for local amplifiers?
  - ERL BPM electronics & V301 electronics will be tested later this fall on the 5 BPMs during the Gun commissioning.
    - 9mm, 15mm, striplines ???
- Aperture Study: reveals that the DCCT is the only limiting aperture of the ERL instruments. A transition from 2.375" ID to 1.875" ID will be required.
- Merger Dipoles: 1st dipole requires a laminated core for fast change to diag. B/L.
  - However 1mA of ripple (20A supply or 2.5A load) in the separate supplies causing 50% increase in emittance suggests the need for a single supply with series connection.
    - This would require both dipoles to have laminated cores.
    - Smaller rated supplies would reduce the ripple AND 60Hz ripple would be common to both supplies.
    - Jorg will work more with Don Bruno to determine if and how to mitigate this concern

Notes from this previous (1-28-16)

- Profile Monitors
  - Work on transport PM's include making a simplified model file of the ERL vacuum cubes (with limited mod's) adding ferrite rings for Particle Studio simulations.
  - If not satisfactory for impedance, new chambers will be designed.
  - Ground contact was omitted from the cooling section chambers. A mechanical attachment method is being investigated.
  - Rastered Beam PM
    - Dedicated R&D effort required
    - May require a larger diameter beam pipe
    - Should fit between in ~2.5m length
    - Will need 3 DC correctors on top of 3 fast kickers to
      - move the beam to the side,
      - insert the wire on chamber center,
      - then kick the beam across & back,
      - retract the wire, and
      - relax the beam back to chamber center.
    - If affect on beam impedance is too great, Alexei is willing to give up this instrument in the transport and have only one in the extraction line.
    - Lots of discussion on implementing pulse picking kickers to extract a few bunches to image on a screen.
      - Peter T. found a paper on OTR with 1MeV beams; although charge was much higher.
        - » An image intensifier could compensate.
        - » http://www2.cose.isu.edu/~yjkim/course/2012fall/OTR/M.Castellan_NIM_A357_1995_pp231.pdf
    - Receiving signal from wire will require high bandwidth electronics
- Ion Clearing
  - Buttons needed in DC gun area only
  - Gap in electron beam will be sufficient to clear ions in the transport and cooling sections
- Gun commissioning beam line
  - Need to calculate multi-slit mask for emittance measurement for 400keV compared to 1.6MeV and 2.7MeV
    - Multiple masks may be required
    - May have to change distance to PM
    - There was talk of installing multiple mask stations at corresponding locations if necessary

Notes from previous meeting (1-21-16)

- Cathode Imaging:
  - We will plan to guarantee that the cathode gets inserted such that the activated spot is always in the same location when inserted; thus avoiding a full scan of the laser across the cathode. According to Bruce, Laser
  - s don't provide full aperture covering the entire cathode. Need to layout optics to confirm..
  - Bruce argued against the insertable cathode mirror as it is rarely used and its BeCu RF seal produces undesirable particulates. Cornell typically uses the laser insertion/extraction ports to peer at the cathode through the laser steering mirrors; although they don't give a full view of the entire cathode surface.
  - We can use a color camera and illuminate with red light to provide a high contrast to the green laser spot on the surface.
  - Degradation of the cathode surface will result in increased specular reflection – directly visible by this camera.
  - A more important camera to have is one looking through a mirror at the back side of the inserted cathode. A fiducial can be made on the rear of the cathode that indicates the orientation of the activation spot for in-situ confirmation.
  - Thus we decided to remove the plunging on-axis cathode inspection mirror
- Gun Profile Monitor
  - Need to check if YAG screen (19x19mm) is large enough to make solenoid scanned emittance measurements using varying beam size on screen.
  - Bruce suggested multiple screen types (Beryllium Oxide, Diamond) for imaging higher beam charges to avoid the low saturation limit of YAG.
- Gun Anode:
  - As anode is biased to ~500V or so, an pA ammeter can be used to monitor cathode condition where increased beam halo from a roughened cathode surface would result in halo depositing current on the anode.
  - The anode bias could be enough to act as an ion clearing electrode but no data to prove yet.
- Ion Clearing
  - We want to avoid adding bias tees to the BPM buttons to combine position measurements with ion clearing.
  - Additional buttons proposed to be added for use as ion clearing electrodes in the gun section
  - Cornell makes their own from feedthroughs and simple flat electrodes.
  - To save space, an 8-button chamber is proposed to provide position measurement, ion clearing, and phase pick-ups for LLRF
  - Bias voltage of only ~100V is required, per Bruce.
  - Cornell built a parallel plate device with matched impedance for ion clearing but was expensive.
  - Tests with ac bias showed optimum frequencies and resonant points where ions were quickly swept away. This was indicated by reduced ion-induced radiation on nearby PMT.
- Gun Commissioning Beam Line
  - Beam line supposed to be roughly 6m long
  - Will need corrector magnets every 1m for operation without booster. Jorg found that our beam will propagate far beyond the length of this beam line.
  - Cornell used BPM time of flight phase measurements to calibrate their Gun HV. Mike asked how they calibrated the time measurent… no response.
  - Dimitry wants to measure pulse to pulse amplitude stability for <5% requirement. Zhi plans to implement a laser pulse monitor to give phase and amplitude noise measurements using PLL at the RF frequency for an amplitude noise measurement of ~1%.
  - Need solenoids every 2m and a high power dump to accommodate high current operation of Gun.
  - Beam line will be planned with all instruments as shown – positions to be redefined.
  - The ICT will only provide total charge measurements for – 10 us samples of pulse trains during commissioning.
  - DCCT & ICT will require aperture transitions.
- Beam Halo
  - Cornell's concern was strictly personnel radiation safety and cathode lifetime. Operation in the RHIC tunnel gives rise to concerns of cathode lifetime and risk of quenching the booster SRF cavity.
  - ERL halo monitors planned to be mounted just downstream of the last solenoid in this line. Should be where beam is largest.
- High Current Profile Measurement
  - Do we really need it:
    - Only mechanism that affects profile from low to high current is suspected to be effects from ion clouds. Thus with ion clearing, do we really need to make the measurement?
    - Other advantage is an online profile measurement – maybe the greater advantage
    - Fast emittance measurements are needed to look for effects of ion clouds since they caue oscillations of the pulse train tail. This may be visible in the raw BPM button signal. Cornell admitted to not having sufficient diagnostics to look for this.
  - Flying wire can do 20m/s across the beam. Current design flaws include: wire breakage & vibration, vacuum upset during operation. Cornell agrees that this R&D project may not be mature enough for us to rely on.
  - Alternative **Rastered Beam Profiler** is now the avenue of choice to pursue.
    - Dump location would not require a perfectly compensated orbit bump.
    - May not fit in the merger section as spacing between kickers is needed to provide a good lever arm for a 20m/s beam traversal over the wire.

Back-Up Slides

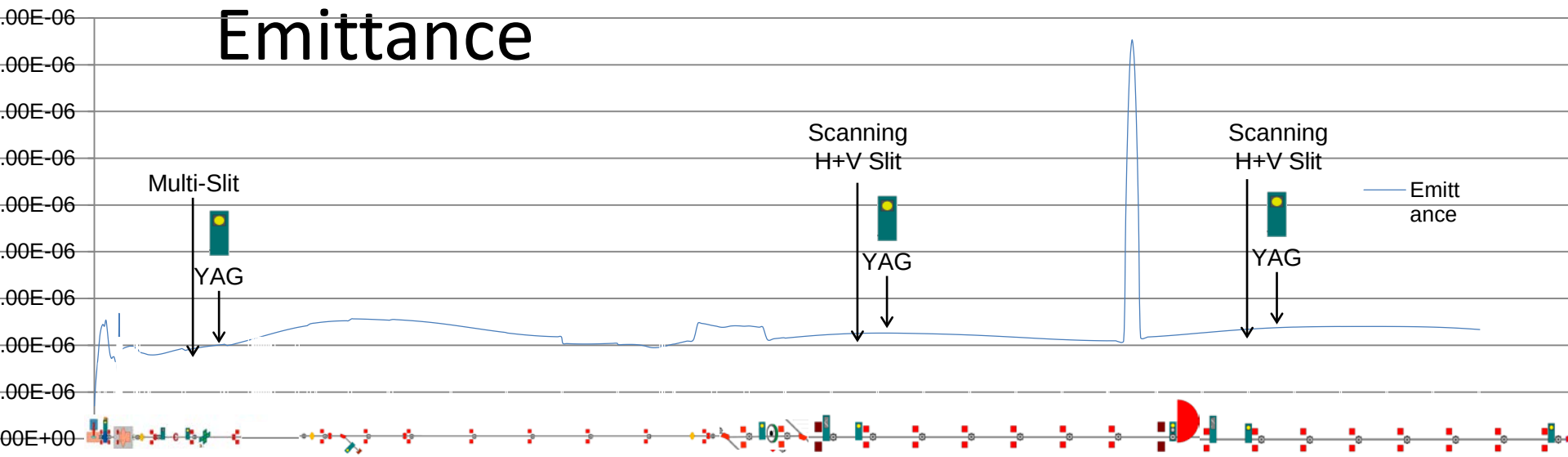
Emittance
Multi-Slit
YAG
Scanning
H+V Slit
YAG
Scanning
H+V Slit
YAG
Emitt
ance

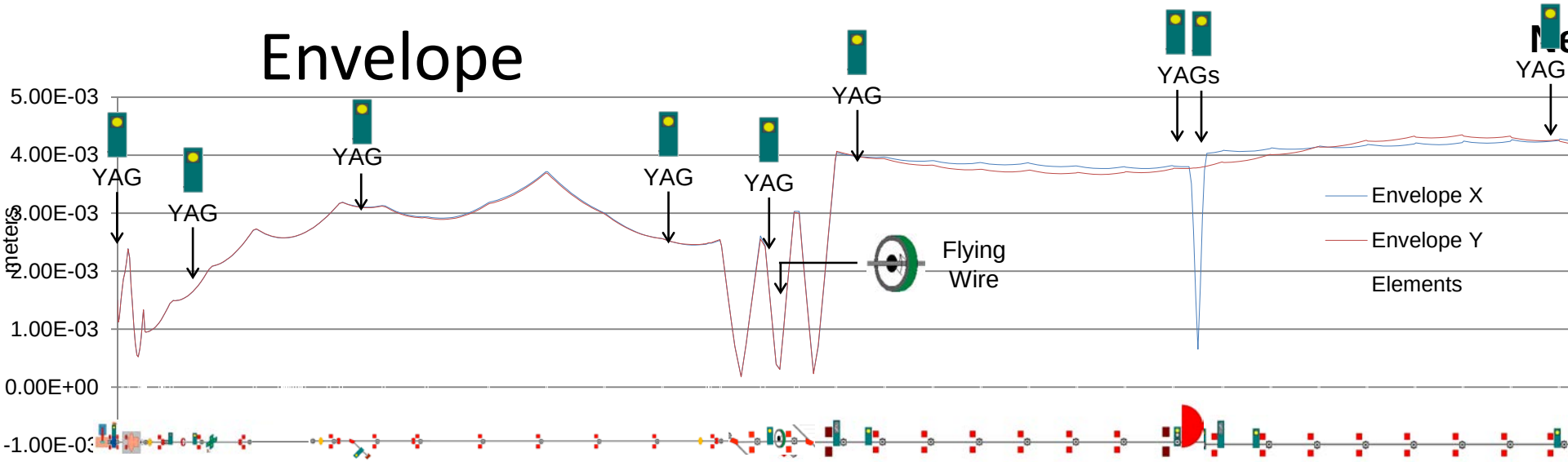
Envelope
5.00E-03
4.00E-03
3.00E-03
2.00E-03
1.00E-03
0.00E+00
-1.00E-03
meters
YAG
YAG
YAG
YAG
YAG
YAG
YAGs
YAG
Flying
Wire
Envelope X
Envelope Y
Elements

Main Beam Line YAGs

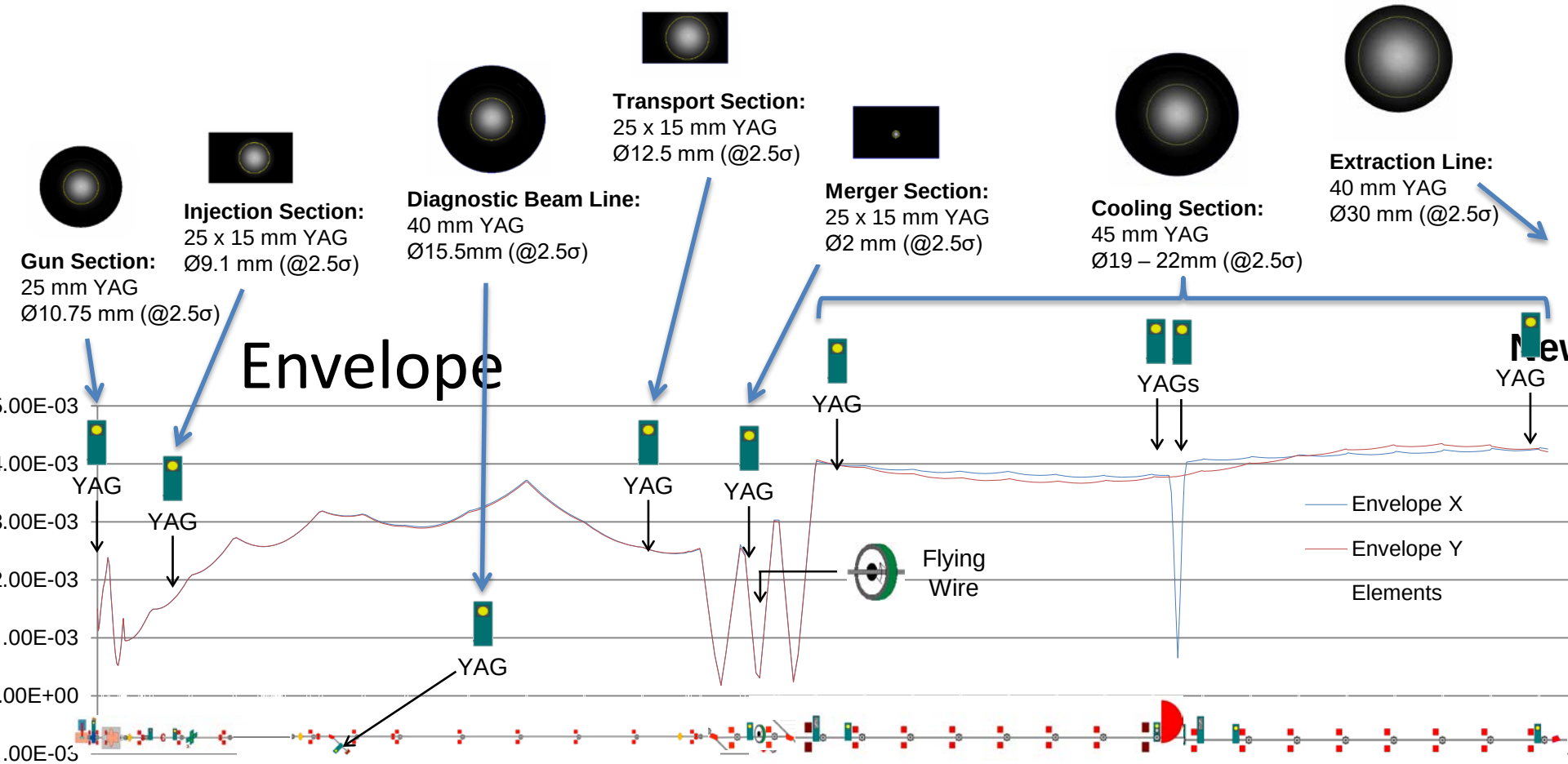

Commissioning Beam Line YAGs

Simulated image on YAG from Deflecting Cavity

Commissioning Beam Line:
(Long. Ph. Mon)
45 mm YAG
~20 x 20 mm

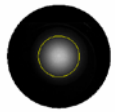

Commissioning Beam Line:
(PM with slit)
30 mm YAG
Ø10mm(@2.5σ)

Commissioning Beam Line:
(Scanning YAG)
30 mm YAG
Ø3.25mm(@2.5σ)

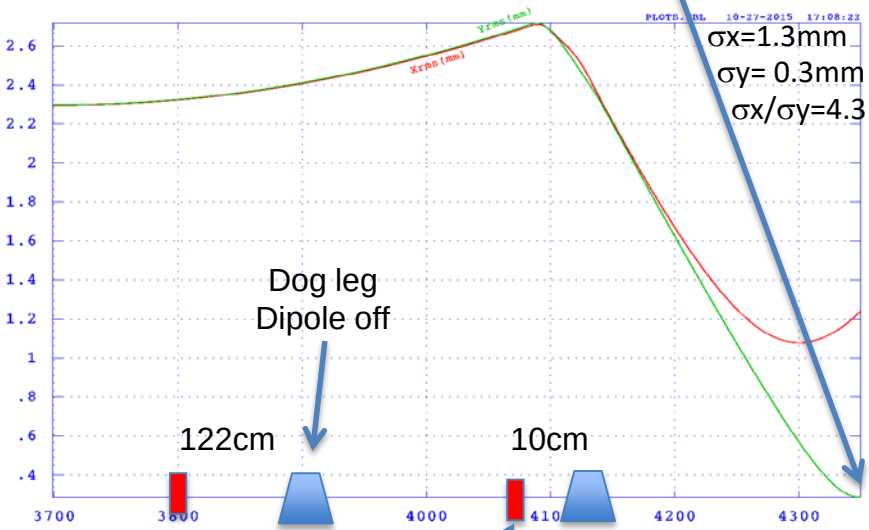

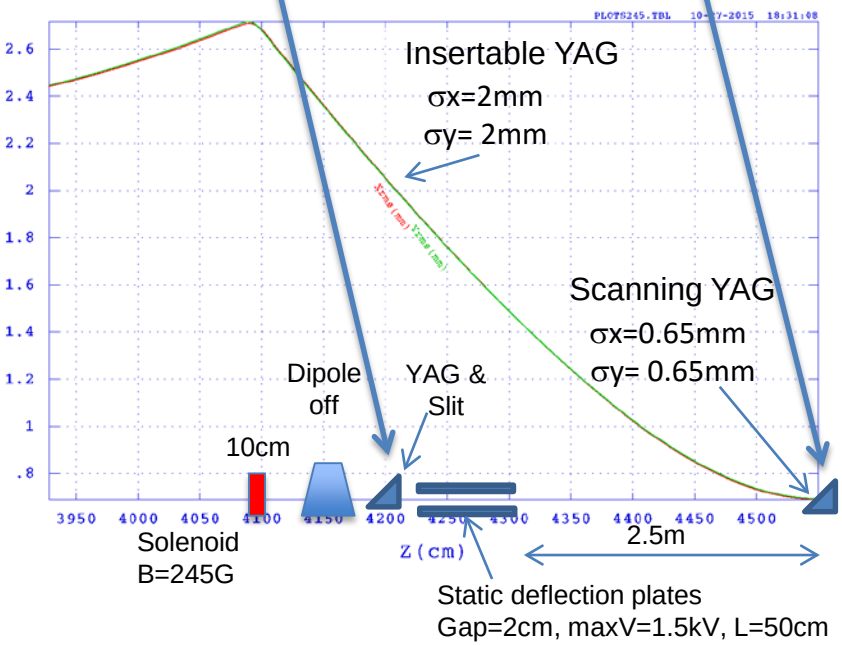

Dispersion

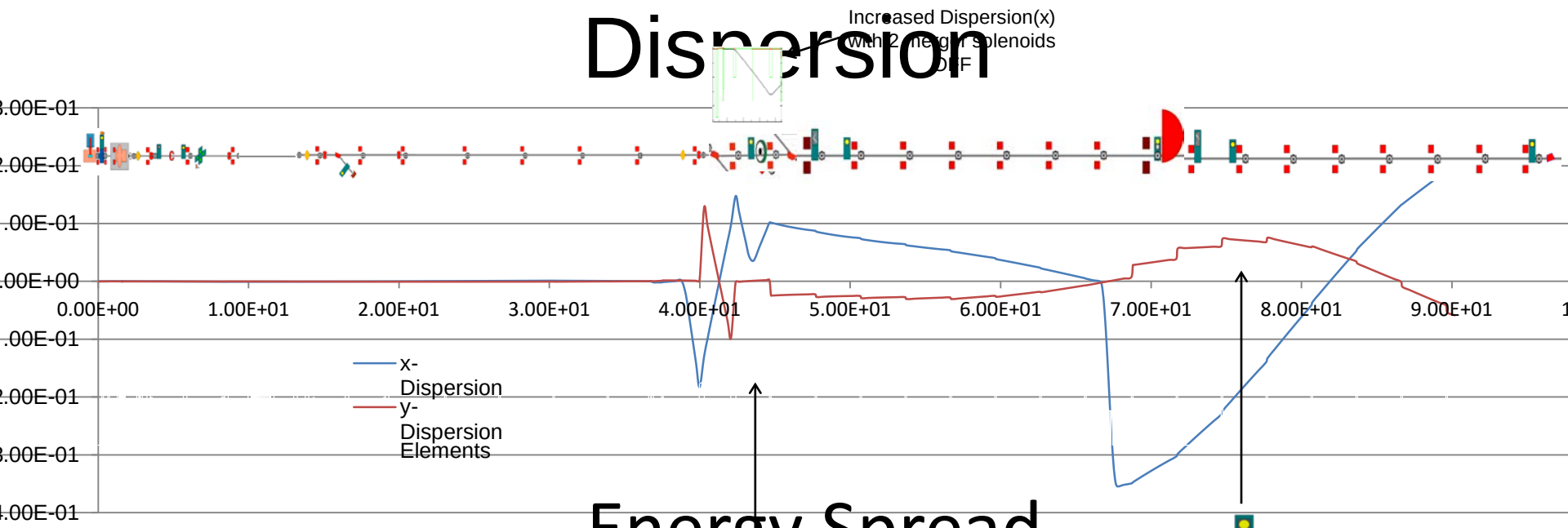

Energy Spread

Stripline BPM study for Transport

- Signals in a RHIC type-2 BPM that would be produced by 30pC electron bunches in the LEReC transport line

➢ The striplines need to be **shorter** for 700 MHz rep rate to avoid signal overlap.

➢ The striplines can also be **narrower** since the signal amplitudes are larger than necessary.

  ➢ Narrower striplines will reduce **wake loss** factors of 5.8E-2 and 1.4E-2 for the 10mm and 37 mm rms bunch lengths Stripline BPMs seem to be a viable solution.

BPM signals for 30 pC bunches of rms length 10 mm (blue) and 37 mm (red)

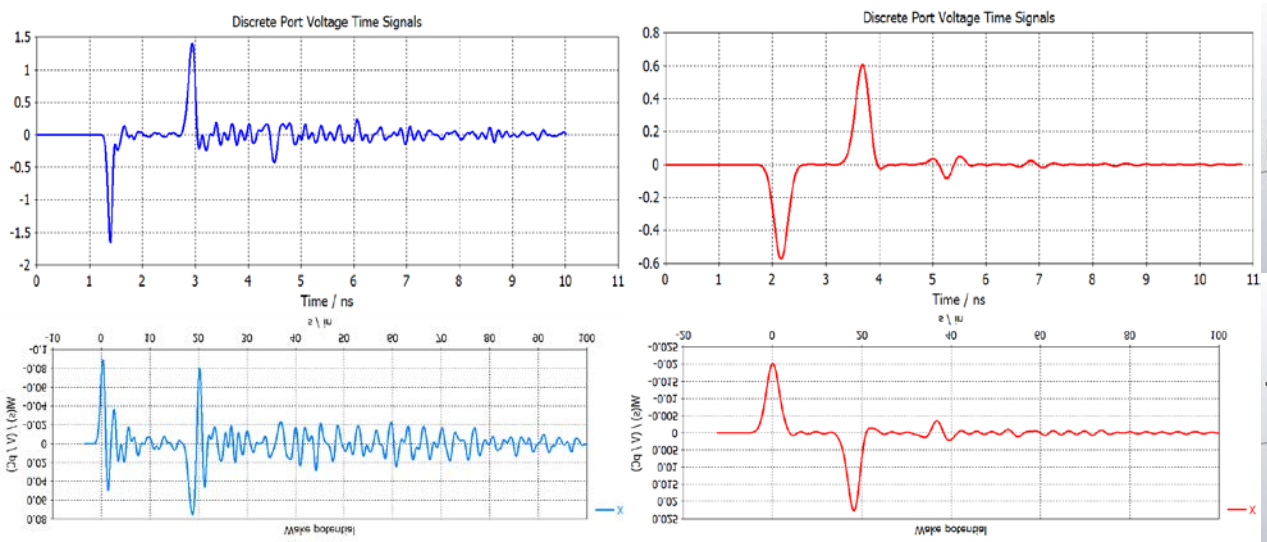

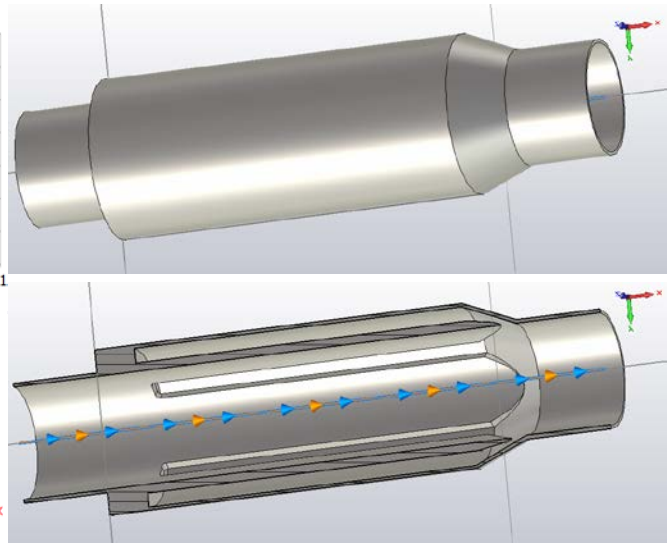

RHIC Orbit Stability

- [Per M. Minty] We need to measure the stability of the absolute position of the RHIC ion beams documenting the effectiveness of
  - (1) global orbit feedback, which likely is limited by corrector bit resolution (presently 12-bit) particularly at low beam energies
  - (2) 10 Hz feedback, which by design (cost savings) included only 1 corrector per perturbation; this has worked well so far, but obviously misses the second degree of freedom (position and angle) and the triplets are long (can't assume point-like excitation)

- If the ion beam trajectories vary by more than allowed, paths forward include
  - higher resolution control of the RHIC corrector dipoles (for global orbit feedback)
  - additional air-core dipoles for 10 Hz feedback.

- We should document beam trajectory variations in sector 1 (LEReC) and in IR2 (CeC) during RHIC startup and aim to implement localized weighting (ala Chuyu) of BPM measurements for improved trajectory control in these regions.

Summary

Analysis of data from FY14 Au+Au, 7.3 GeV/u run with LEReC-like lattice in IR2 (fill 17984):

		Blue	Yellow	
Variation in average orbits: (peak-to-peak, microns)	horizontal	200	200	controlled by orbit feedback
	vertical	150	200	
Variation in average angles: (peak-to-peak, microradians)	horizontal	< 10	< 10	
	vertical	< 5	< 10	
Variation in absolute angle: (peak-to-peak, microradians)	horizontal	< 10	< 10	controlled by 10 Hz feedback

Averaged trajectories :

peak-to-peak orbit variations (Q3+Q4)/2 ~ 200 microns

peak-to-peak relative angle (Q3-Q4)/16.3 m < 10 microradians

Absolute trajectories:

peak-to-peak orbit variations at BPMs (Q1 and Q3) ~ 400 microns (in blue, less in yellow)

peak-to-peak relative angle < 10 microradians (horizontal plan)

Orbit displacements (peak-to-peak) < 1/10th of expected rms electron beam size

Angular variations (peak-to-peak) well within 50 microradian tolerance for relative (rms?) ion-electron beam trajectory divergence

Longitudinal Phase Space Monitor – Commissioning Beam Line

- **704 MHz Vertical Deflecting Cavity**
  - Used for optimization and monitoring of phase and amplitude of the LEReC RF systems.
  - Scaled from Cornell ERL Injector 1.3 GHz design.
  - Time varying vertical deflection of bunch from head to tail.
  - Combined with horizontal dispersion from bending magnet (Dx = 1m at YAG) provides position (time) resolved energy spread along bunch.
  - Very low RF power <500W at highest beam energy.

- **Energy Spread**
  - 500μm width on YAG = 1×10^{-3} energy spread (Δρ/ρ)
  - 100μm resolution on YAG = resolutions of 5% of max Δρ/ρ

- **Bunch Length**
  - 30mm on YAG (100μm resolution) with 3 cm bunch length
  - Resolution of 30mm / 100μm = <0.5% of bunch length

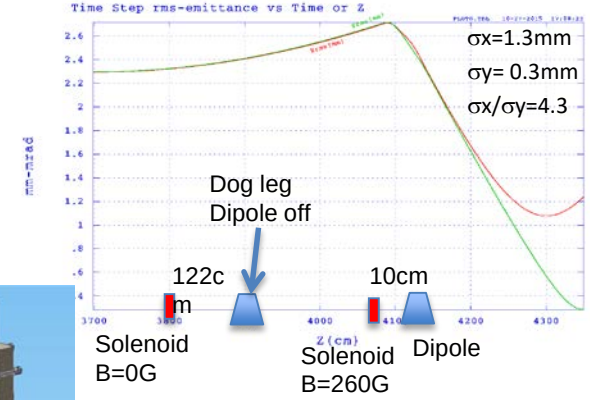

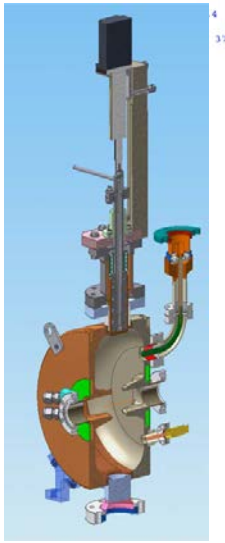

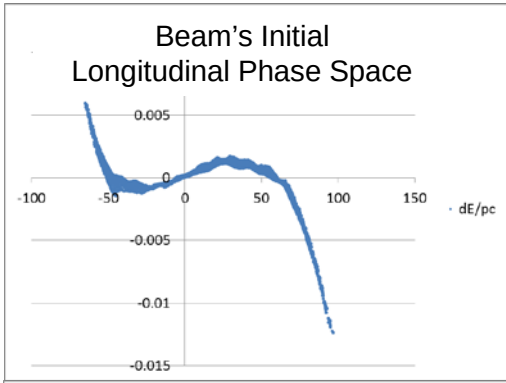

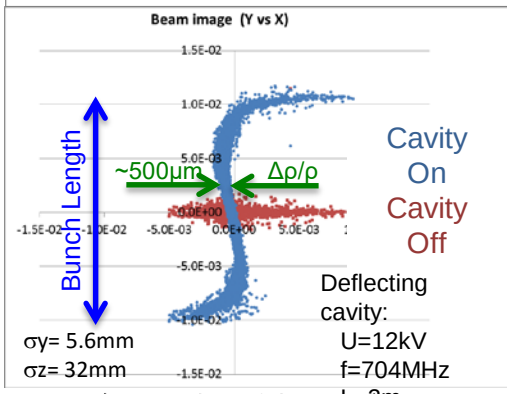

$\sigma_z = pc/eU \cdot \lambda/2\pi L \cdot \sigma_y$

Simulations Courtesy of D. Kayran

S. Belomestnykh, et al., "Deflecting cavity for beam diagnostics at Cornell ERL injector," *Nucl. Instrum. & Methods A* **614** (2010) 179-183.

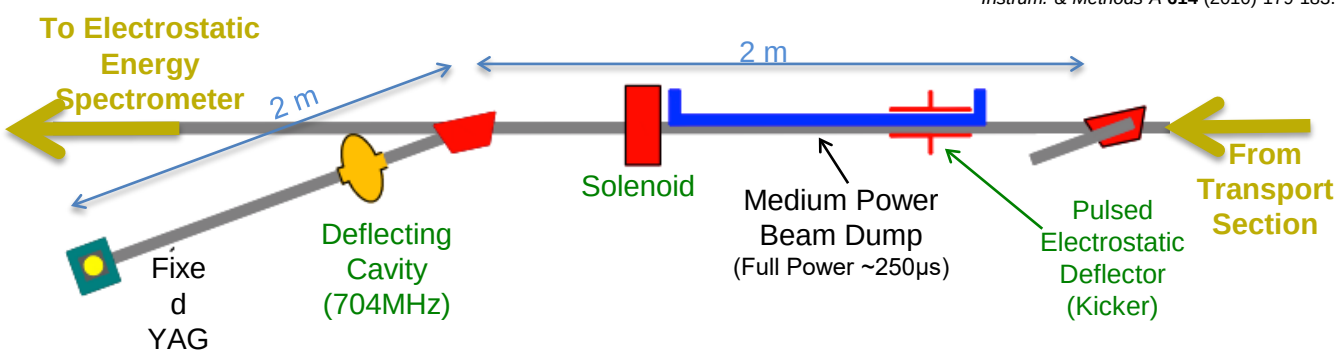

Daignostic ("Commissioning") Beam Line Layout

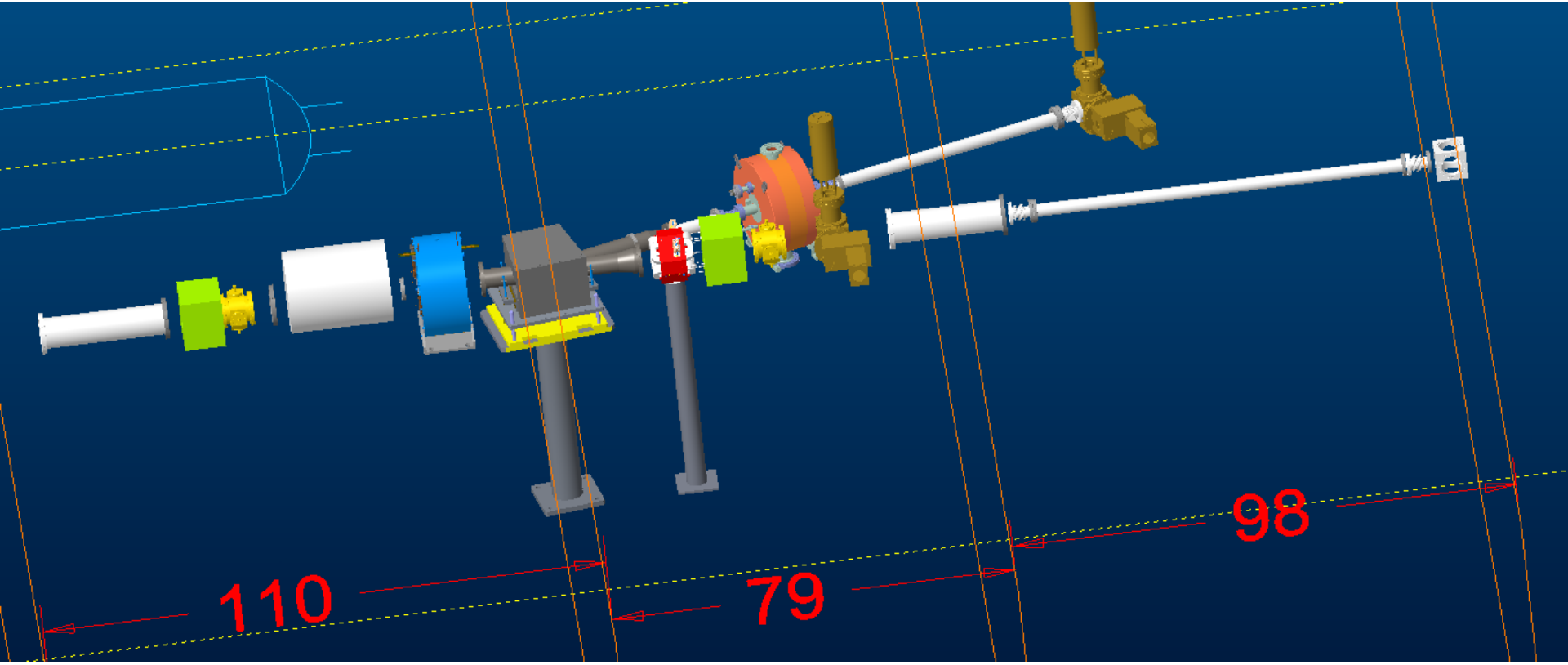

- Beam dump will lengthen to a water cooled beam pipe
- Spectrometer will deflect vertically
- Spectrometer YAG will scan vertically
    - ~4" beam pipe between deflector chamber & detector (YAG) chamber

Absolute Energy Measurement – Commissioning Beam Line

Current approach:

- ~2 kV electrostatic deflecting electrodes
- Scanning YAG screen (+/- deflection) over 100mm
- Calibration using Tandem ion accelerator
- Expected resolution:
  - 50μm optical resolution ÷ 100mm deflection = 5×10^{-4} which can be improved to compensate for noise with a fixed zoom lens.
  - By centering the spot on the screen using Center-of-Gravity image analysis, the sub-micron scan position gives the absolute energy.

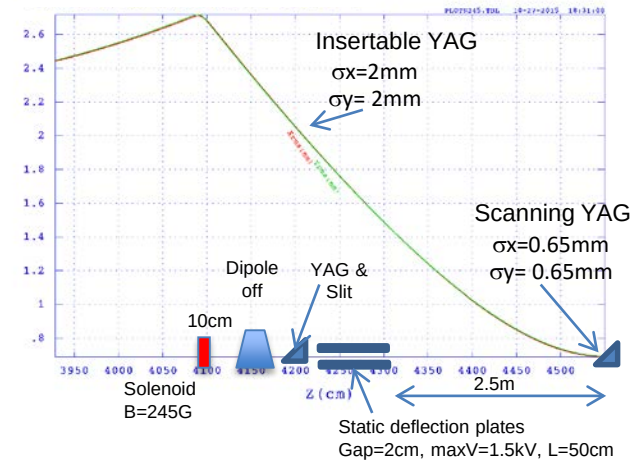

All Particles through beam line

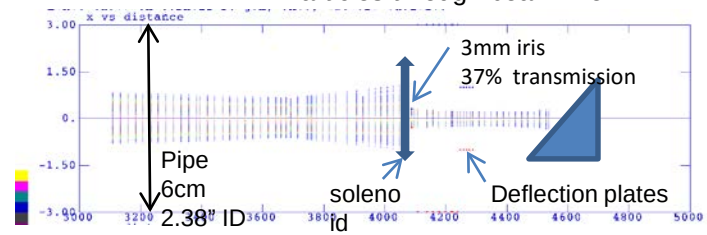

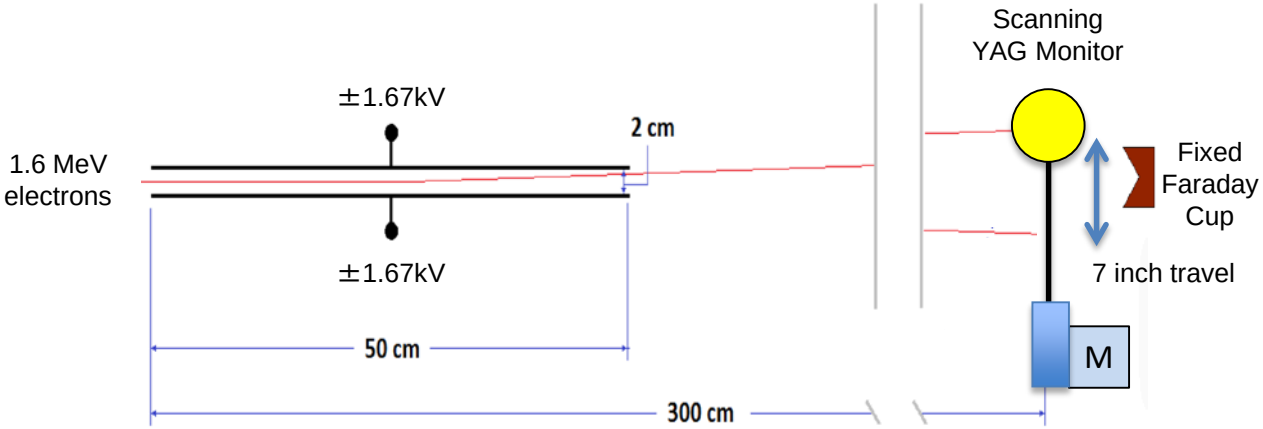

Simulations Courtesy of D. Kayran

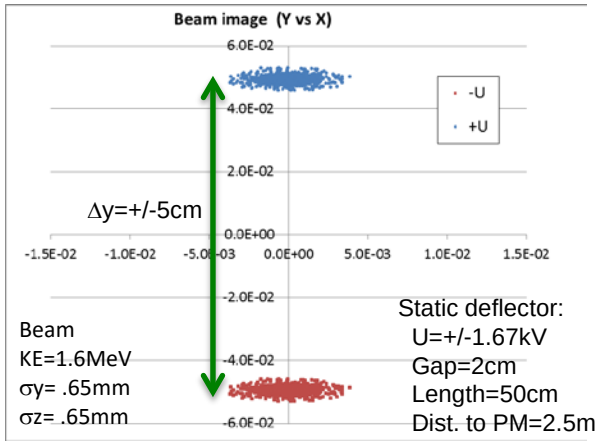

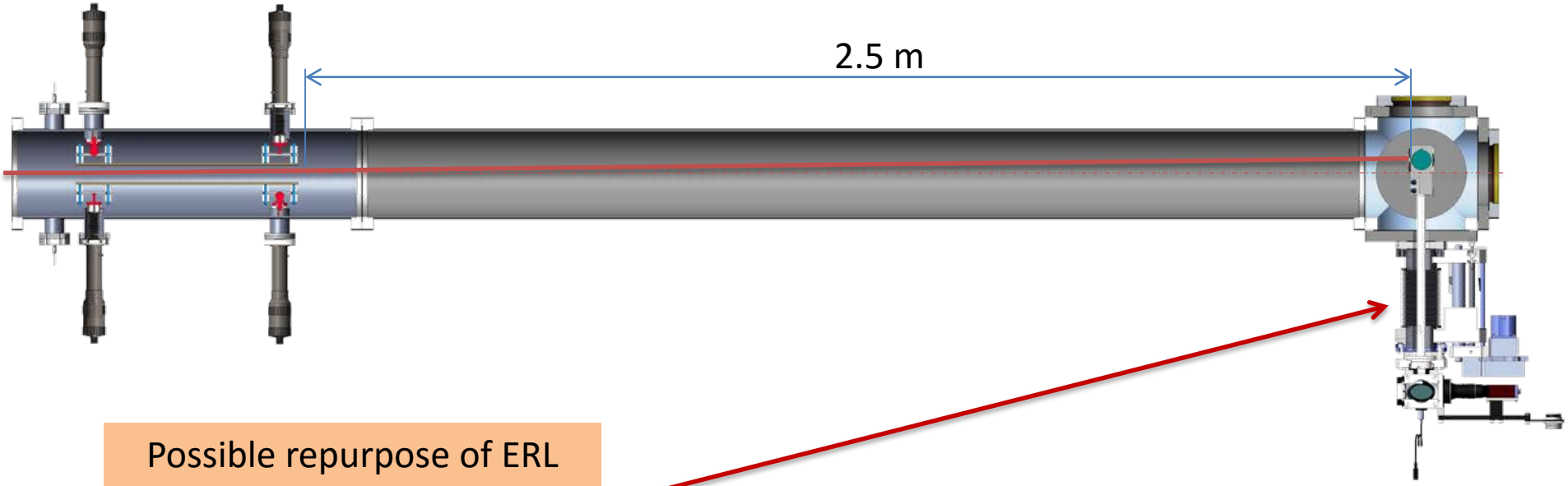

Possible repurpose of ERL DiPM for Scanning YAG (~$30K savings)

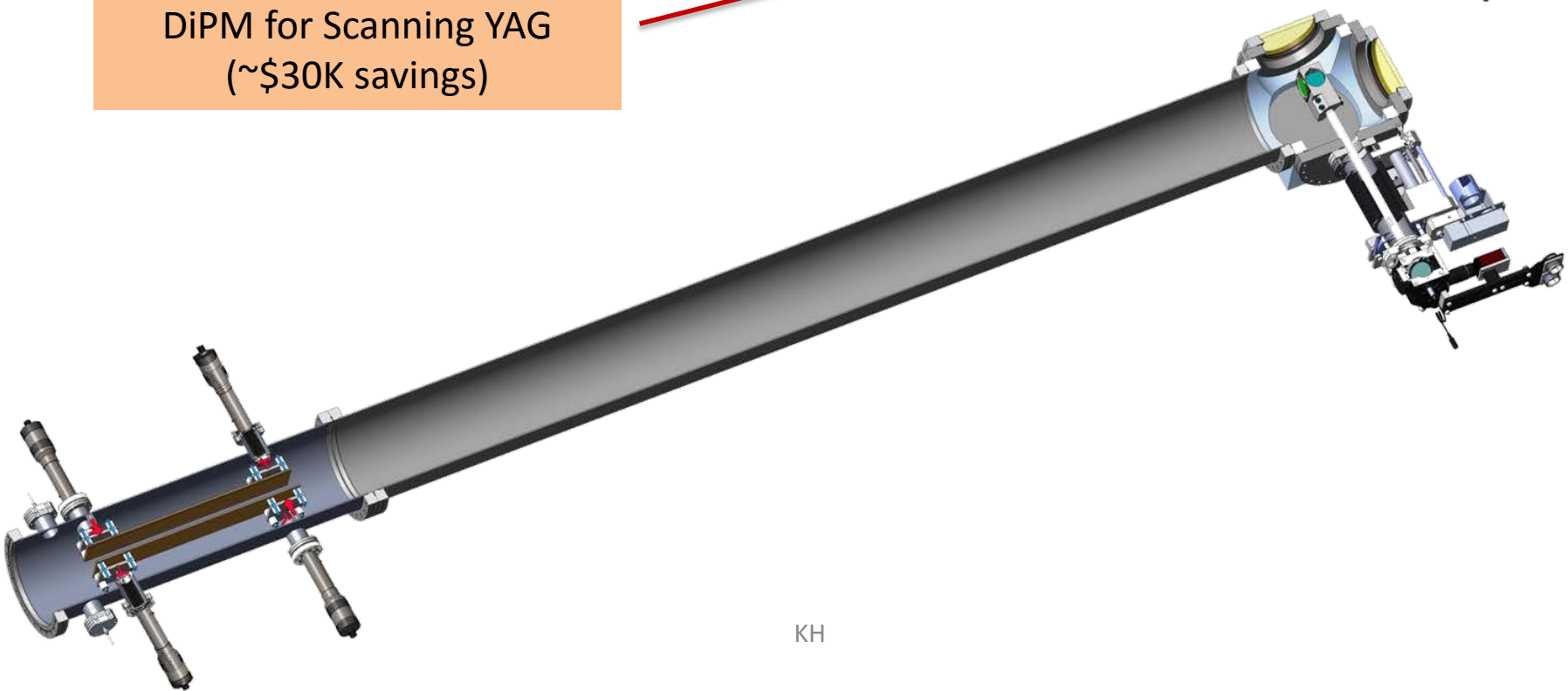

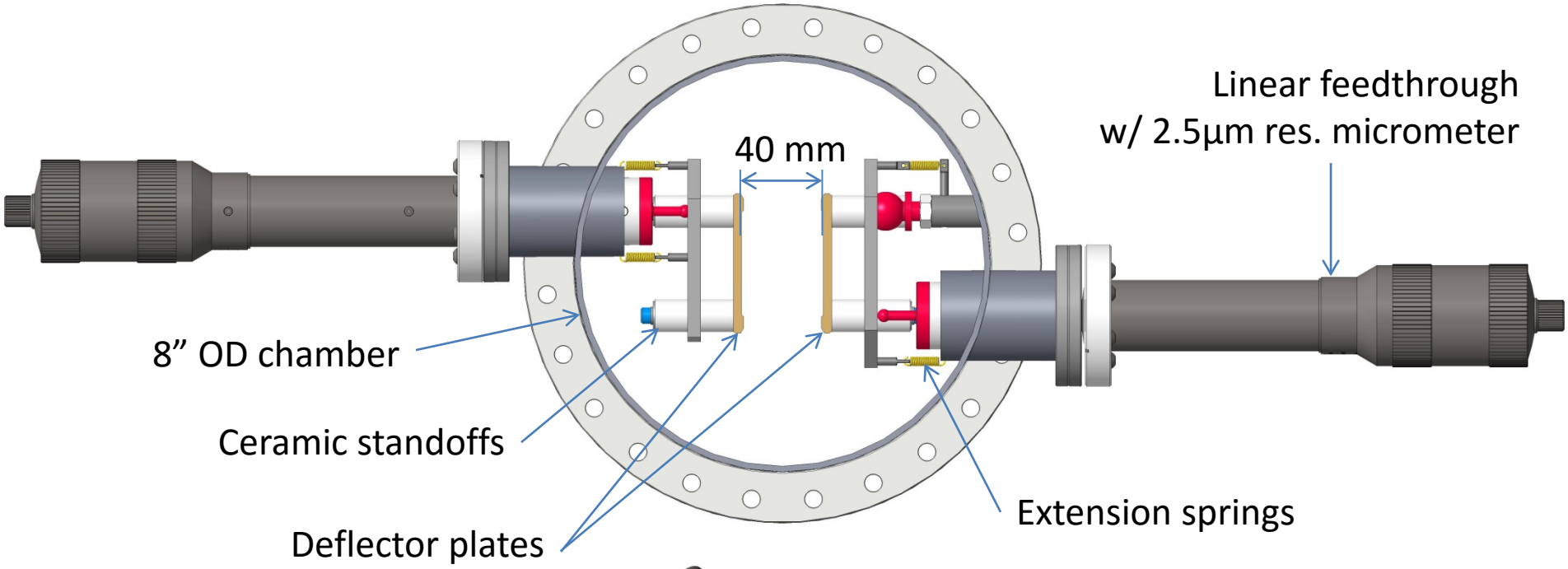
Linear feedthrough
w/ 2.5µm res. micrometer
40 mm
8” OD chamber
Ceramic standoffs
Deflector plates
Extension springs

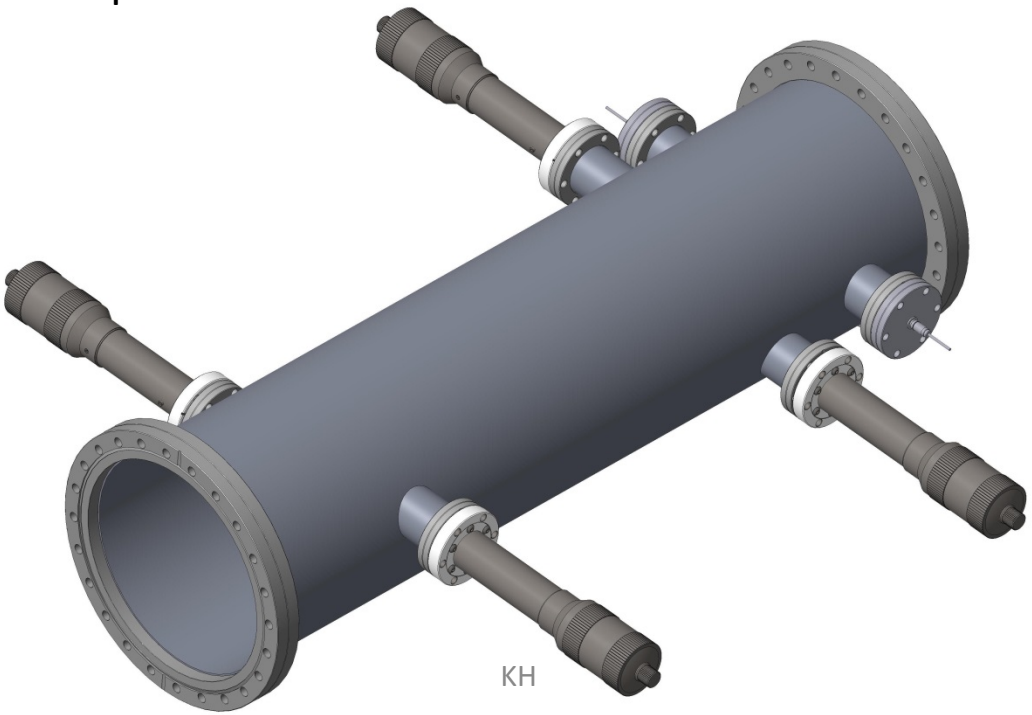
KH

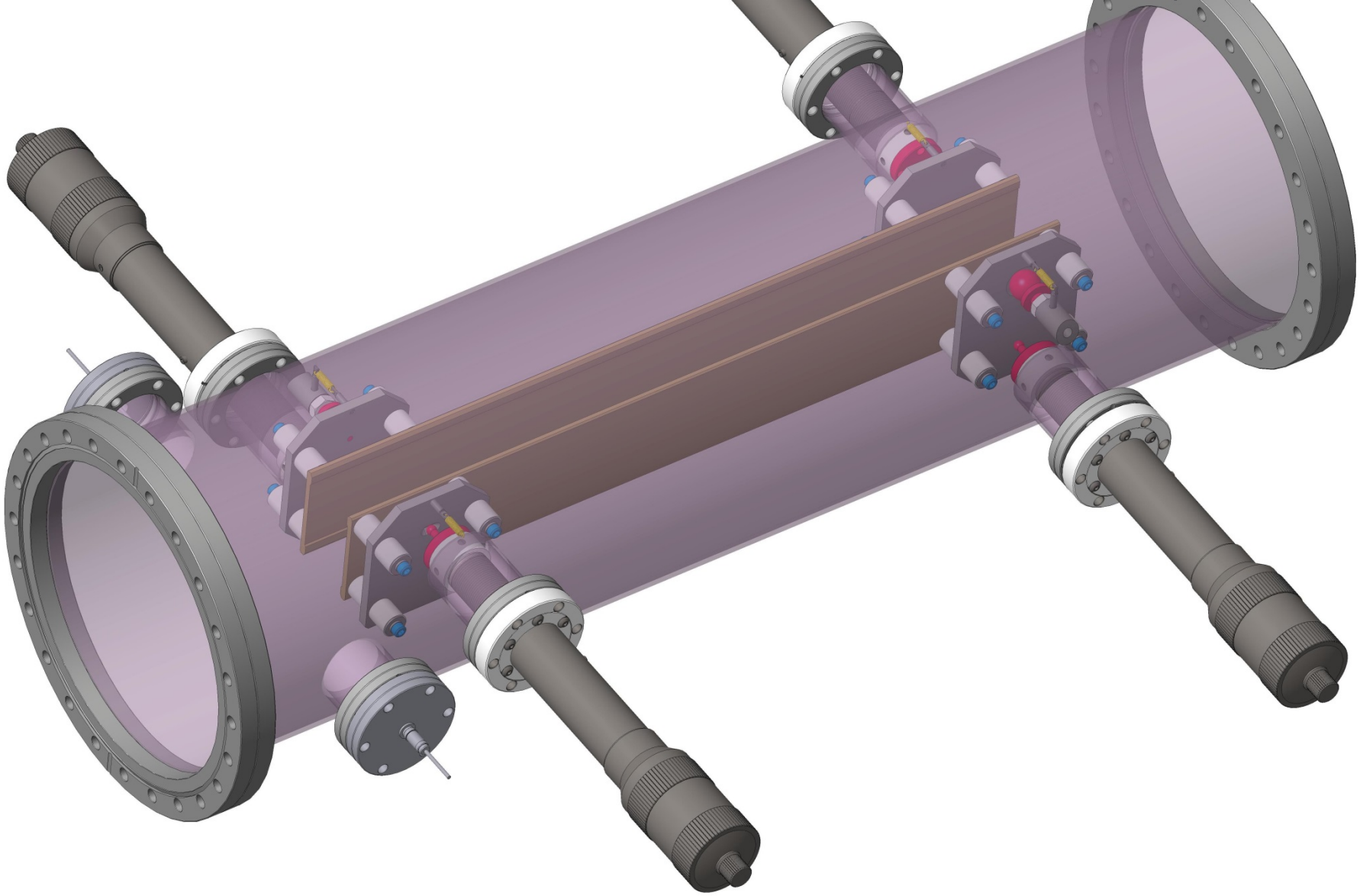

KH

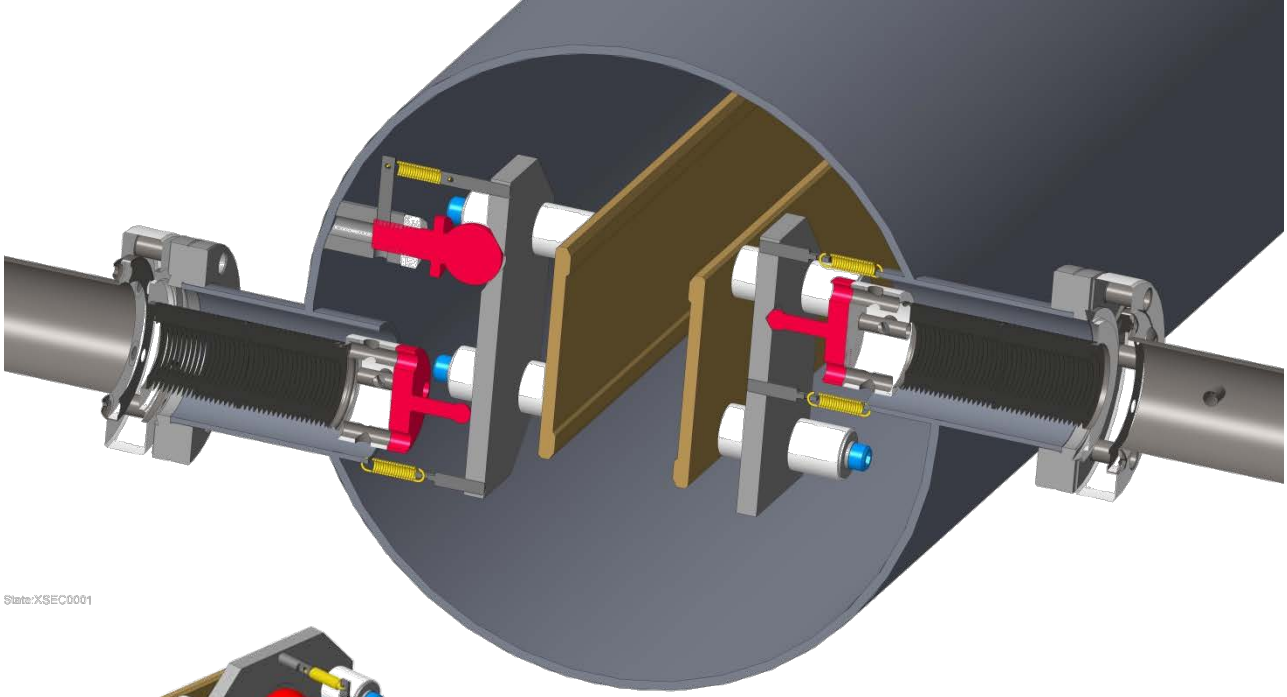
State:XSEC0001

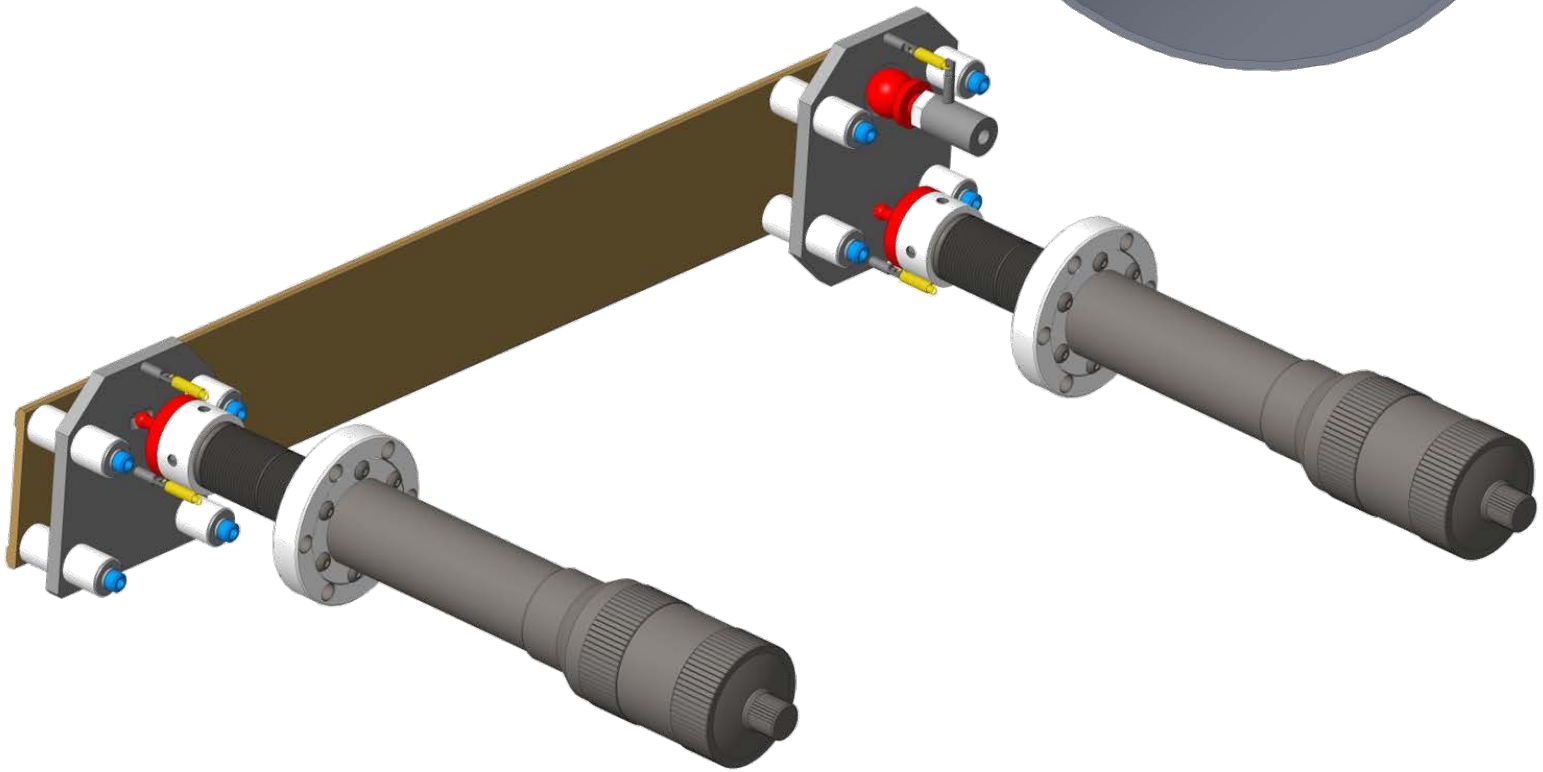

Search here...

Linear Motion Feedthroughs

Introduction	Standard	High Temperature, Standard	High Temperature, Compact
	Miniature	Push-Pull	Rack & Pinion
	Pneumatic	Heavy Duty	Heavy Duty, Pneumatic
	Heavy Duty, Push-Pull	Heavy Duty, Tunnel Access	Heavy Duty, Micrometer

Features

- 2 inch linear travel
- Manual, precision micrometer actuator
- UHV compatible materials
- Welded bellows seal
- Bakeable to 100ºC
- Del-Seal™ CF port mount

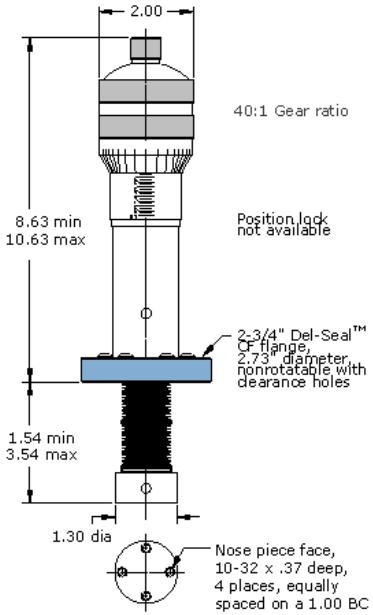

Description

Heavy duty, micrometer driven linear motion feedthroughs allow linear displacement of heavier samples and components with the accuracy and precision of fine pitch thread micrometers. These devices provide position indication on both rotary and linear scales with display resolutions of 0.0001" on the rotary scale and 0.025" on the linear scale. A full revolution of the rotary scale translates into 0.025" of linear travel. Unlike conventional motion feedthroughs, heavy duty models employ reentrant welded bellows construction allowing the use of sturdier and larger diameter shafts. Models with two inch maximum travel are offered on 2-3/4" Conflat® compatible Del-Seal™ CF metal seal flanges.

Specifications	
Material	
Flange / Actuator body	304ss / Anodized aluminum
Shaft seal	AM 350 welded bellows
Vacuum Range	1x10-11 Torr
Temperature Range*	-20ºC to100ºC
Axial load	10 lb max.
Lateral load	20 lb @ 4" extension max.
* UHV units are bakeable to 230ºC with actuator removed.	

Recombination Monitor: Ion Collection

Recombination Detector – Secondary Cooling Indicator.

Collection of recombined ions:

- Lost at predictable location
- Detector: PMT + Counter
- Development underway of a lattice with a dispersion waves in the cold arcs
- Roman Pot type detectors envisioned in the cryostat to collect the Au^{+78} ions.

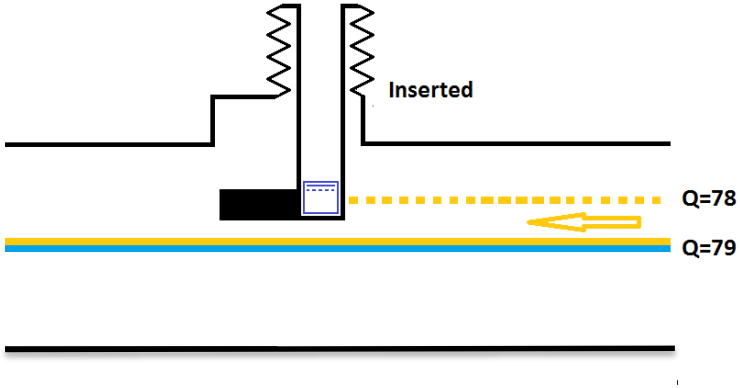

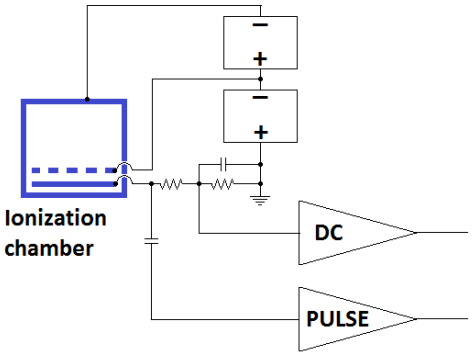

Courtesy of Peter Thieberger

Deuteron Recombination Detector

How to proceed?

- simulations needed for blue detector

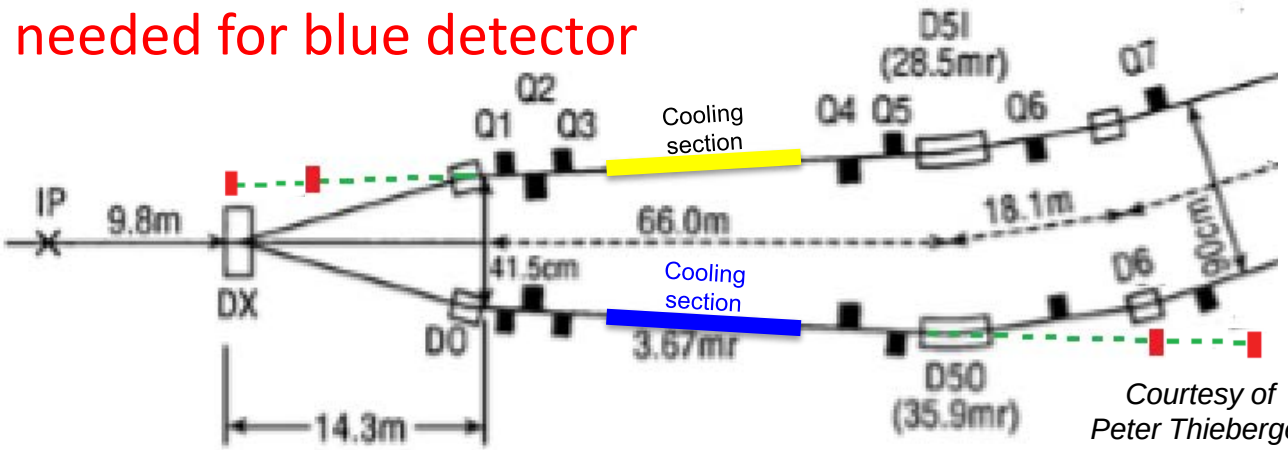

Courtesy of Peter Thieberger

- Investigating deuteron-electron recombination for initial electron beam alignment and energy calibration.
  - Strong, localized signals allow detection starting far from optimal alignment.
  - **Neutral** deuterons from deuteron-electron recombination are not deflected in the arcs.
  - Detectors located outside of the cryostat (red rectangles) will detect these particles and the showers they produce.
  - Detector telescopes can be used to reduce background if necessary.
  - The structure of the expected showers will be studied using MCNPX simulations.
  - A small deflection will result after the neutral deuterium losses its electron when traversing the beam-pipe. This deflection will be calculated and taken into account.

Scanned-Beam Profile Monitor

- **Now the method of choice to pursue**
- Harp processing electronics?
- Design consideration to pursue

1. wire material selection
    1. where secondary emission ≠ electron absorption
    2. Suggested materials: Tungsten-Rhenium, Beryllium, Boron Nitride, carbon, etc.
2. max temperature of wire under CW beam @ 20m/s deflection rate; where CW means continuous macro bunches
3. Magnet Design: Layout?
    1. Required distance between kickers in chicane
    2. What will fit into the dump line?
    3. How many kicker/steerers for local bump (2, 3, or 4)
4. Kicker power supply design:
    1. need specs on rise/fall time of pulse
    2. need magnet tolerance/quality specs
5. Kicker Vacuum Chamber design
    1. Likely ceramic with slotted metal inner beam shield

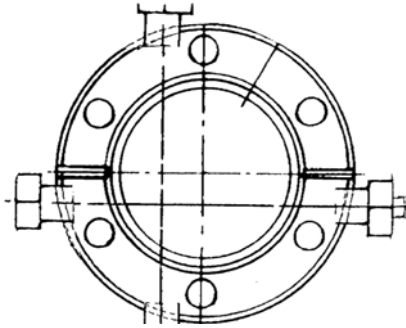

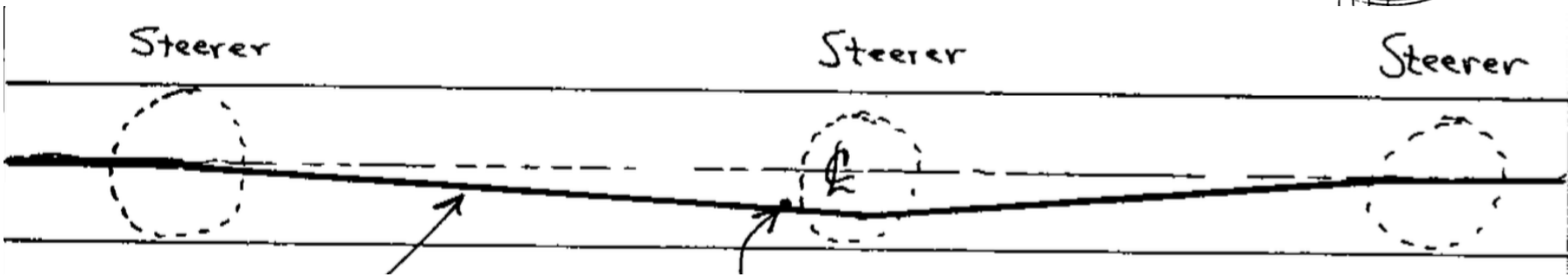

Notes from previous meeting (1-14-16)

- High Current Profiles
  - Wire scanner
    - Plan to meed with Bruce Dunham next week to discuss details
  - Scanning-Beam Profile
    - Low energy provides for low current kicker power supply
    - Need ceramic break but with longitudinal wires for image currents that will suppress eddy currents during the magnetic pulse
    - Direct current sense on a plunge able wire
    - Wire can be retractable through a valve for wire replacement
  - Gas Jet Profile was suggested. Peter found a reference to a "curtain" pulsed supersonic gas jet beam profile monitor at this link: https://jacowfs.jlab.org/conf/y15/ipac15/prepress/MOPWI006.PDF and pictured here to the right.
    - Looks complicated and the bias on the detector will be a danger to the low energy beam
  - Aperture scan Insertable apertures in the cooling section can be used to
    - approximate beam profile from tails
    - Measure angles of scalloping beam between solenoids

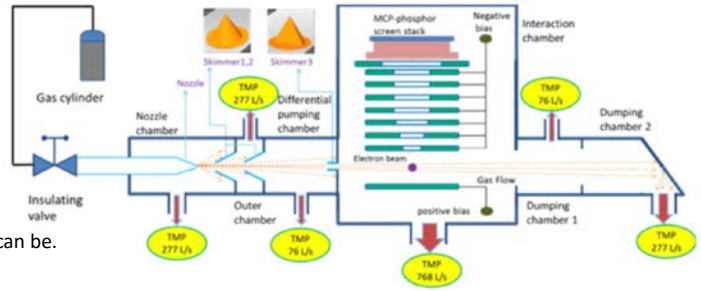

- Current Measurement
  - Dmitry needs to measure beam current from Gun during gun commissioning.
    - Can laser box profile monitor be made isolated to pick-up beam current?
    - Can the ICT be mounted near the gun (before booster installation) for commissioning current measurements?
    - Dmitry will make a list of instruments needed during gun commissioning and how far away from the gun they can be.
- Laminated core in 20 degree dipole is needed at dog-leg for fast switching to commissioning beam line.
  - Magnet is already fabricated
  - Longitudinal phase measuring line needs a similar 20 agree magnet, which can be made with a laminated core and then swapped with the merger dipole.
- Energy Measurement in cooling section has a new BPM for angle measurement
  - Need to know its distance from the hybrid BPM to calculate angle resolution
  - How much will this distance be able to be increased? What will have to move?
  - The quads shown near the solenoids were modeled on the 180 dipole side of the solenoids. Jorg explained that additional skew quads will be required if they are on the other side of the solenoids (as shown in this presentation). This is desirable so as not to interfere with the angle measurements. ACTION/DECISION REQUIRED!
  - No updated from Caylar on NMR probe yet.
- Gun Instrumentation
  - May need to move laser mirrors downstream of the 2nd solenoid for a clear aperture. May not be enough space!
  - New laser box profile monitor design provides 19x19mm YAG crystal. This was deemed large enough for the expected beam size by the group. Design efforts to continue.
  - Much discussion on how to image cathode through laser injection port. This will be implemented (with risk involved in getting a quality image) and thus will be in addition to the dedicated cathode inspection mirror.
  - Laser mirror positioning study continues. Laser box & instrumentation placement on hold until laser mirror placement is fixed.
- BPM Systems
  - Eight 15mm buttons for gun requested from MPF with reduced length. Waiting for 2nd response.
  - Two 15mm buttons for RF pick-ups will have to be the long design used in CeC due to the current chamber design.
  - Rob is planning to employ the use of solid state switches, as used by JLAB, to switch cables to minimize offsets.
  - Peter T.'s work simulating striplings for the transport section met with lots of questions of why the buttons aren't sufficient.
    - Igor suggested putting narrow-band ringing filters and amplifiers near the buttons in the tunnel, as Kevin Mernick advocated the use of local amplifiers too. These switches have good results in the stochastic cooling electronics since 2 years.
    - Stripline development wasn't budgeted for; however new buttons larger than 9mm were also not budgeted for.
  - Rob is still tracking down slow drifts in tests with long cables and splitters into the RHIC tunnel. Temperature affects are being analyzed.
- RHIC Orbit Stability
  - Study started by Michiko; time didn't allow discussion of the progress.
- A concept of the electrostatic spectrometer is complete (3D model)
  - Will be used to build schedule & cost estimate
  - The YAG scanner could be repurposed from the ERL DiPM (saving ~$30K)
  - Igor suggested a fixed YAG & optics system with a scanning vacuum chamber attached to bellows
    - This may conflict with the system's requirement to be rigid and and self-contained but can be considered during the official design effort.

Notes from previous meeting (1/7/16)

- **DC Gun:**
  - There is a question on which side of the gun to put the laser table in order to clear cryo equipment.
  - Particle Studio simulations have a problem with v<c as is the case in the gun area. It was suggested to simulate based on v=c and scale by the difference in Beta.
  - We need to generate a model of the gun transport suitable for Particle Studio simulation. We'll need to include the shielded version of the bellows.
  - Cathode imaging was debated without a firm opinion on whether or not it needed to be available during operation or allowed to block the electron beam during imaging.

- **Rastered Beam Profile Monitor:**
  - If used during operations, we'll have to plunge in the filament, make two sweeps across it (back and forth), and remove it. The profile would be generated by plotting the signal from an in-vacuum scintillator (or secondary electron pick-up) against the steering magnet current (predicting beam position).
  - How to pick-up secondary electrons without a biased pick-up (bias could affect the beam)
  - The beam energy is too low for an air-side PMT.
  - Toby will ask the concepst's author (Mike Tiefenback) about its use at our low energy (1.6MeV).
  - Measurement of profiles with high power beam seems prudent as Cornell showed very different profiles for low and high energy; however, their measurements were taken with varying parameters, putting their results in question.
  - What do we really loose by giving up an online high power profile measurement? The diagnostic beam line can make a sampled measurement.

- Concerning using the diagnostic beam line (or "commissioning beam line) we may need the 20 degree magnet to have a laminated core to facilitate switching on and off of the magnet from time to time.
  - Is it too late to change the core properties of this magnet?

- Toby will request an update on Caylar's progress on NMR probe and proposal for magnet power supply integrated with their probe for the 180 magnet.

Notes from last meeting (12/17/15)

- The LEReC gun will be commissioned with a fiber laser transport.
  - Fear of nonlinearity in the fiber suggests an inability to reproduce the “beer can” shipped laser pulses & macro pulses.
  - Based on experience at the JLAB FEL, we are preparing for the likelihood of needing an evacuated (or dry nitrogen filled) laser transport pipe system.
- Concerning the BPMs in the gun-to-booster section, current test data suggests requiring averaged data over 1 – 10 us long trains of macro bunches to provide 100um position resolution using the 9mm buttons.
  - A small meeting may be held with Michiko, Dave, Rob & Alexei to decide if buttons will be sufficient.
  - We are ready to request a quote for MPF to redesign their 15mm buttons (used at CeC) with a much shorter depth.
  - We may plan to center the beam using many turns of beam for good position measurement followed by profile, emittance, energy & energy spread measurements in the single macro bunch mode.
- We need two BPMs between the 180 dipole and the solenoids to make an accurate beam angle measurement.
  - We need to calculate how accurate of an angle measurement can be made adding a BPM between the hybrid device and the solenoid.
- To synchronize the laser to booster RF (with feedback loop)
  - we will add a photodetector to sample the laser just before entering the laser box
  - Kevin(s) Smith & Mernick requested to add a pair of button pick-up electrodes to the laser box to provide beam based feedback to LLRF as well.
- Concerning imaging of the cathode, a fixed mirror and viewport is cheaper & better than a plunging one as the cathode can be imaged while producing beam.
- The longitudinal phase monitor (in the commissioning beam line) needs 0.4 degree resolution for proper energy spread measurement. The current location provides roughly 5 degree resolution based on current optics simulation.
  - Michiko will re-evaluate the simulated data.
  - The entire beam line may need to move downstream of the 180 degree dipole.
  - The optics design is waiting on a firm design and impedance analysis of the beam kicker & dump.
  - The optics should be designed so that the beam at the center of the kicker is imaged onto the YAG screen

Notes from previous meeting on 12/3/15

- 1st diag. B/L magnet needs to be an ERL 30 degree dipole, 20 degree is shown in this layout.
- ERL aperture is actually smaller... maybe choose the larger aperture dipoles in the ERL dump. George to advise…
- Discussion of running without booster: need corrector every 1m, or 2 layers of mumetal, or use long helmholtz coil...
- New goal to run beam without booster, through all planned instrumentation (mostly from ERL) to the FC in the first diagnostic beam line.
  - Alexei would like to install 8kW CeC beam dump to test gun next year.
  - Plan to move the YAG (just before 704MHz warm cavity) upstream to just after the 1st diag. beam line for next year's test.
- need to take care to run magnet cables so as not to generate stray fields! Don Burno will look for twisted pair power cable for magnets <20A. It was suggested to eliminate last dipole before the beam dump. However, this will inceased back shine to the instruments.
  - we may change the dump over- focusing quadurpole to a solenoid. Dmitry will look into this. will discuss during design in 2 months...
- It was suggested to elongate the laser box and incorporate the two new ports into the box instead of a cross to provide a plunging cathode imaging mirror.
  - A back-up plan shall be to image the cathod through the laser entry port and steering mirror using a mirror in air on axis with the laser with an aperture for the laser to pass through.
  - A better alternative is to simply add a fixed mirror and viewport to avoid the plunging mechanism and also allow for cathode imaging simultaneous to beam production.
- Request for quotation for a magnet power supply was sent today to Caylar to work with the NMR probe for feedback on the magnetic field.
- Concerning the Flying wire scanner, Igor suggested a carbon sheet to thermally image the profile of the beam. Peter commented that this works for beam finder but suffers from nonlinearities for an accruate profile? Could we back out the nonlinearities?
  - need to model device for impedance
  - Need to ask Cornel about results with titanium, is it any better than carbon?
- Optics studies from Dmitry show the same optics as presented to DOE in Nov. (shown here).
  - Open question is whether or not to add BPMs to this portion of the beam line and is any MuMetal shielding required.
  - John Hock is involved to apply eLens BPM & drift tube designs toward the deflector and kicker designs for LEReC.
- Concerning the Electrostatic Energy Spectrometer, the deflector voltage will be increased toward 5kV so that the 2cm gap can be enlarged to accommodate the beam. The gap will be increased to 4cm.EndFragment
- Concerning the recombination monitor, the open issue here is the choice of detector to install inside the cryostat and whether or not to make the detector moveable. A warm motion feedthrough like what is being installed on the CeC 700MHz tuner may be a candidate.

Notes from previous meeting on 11-24-15
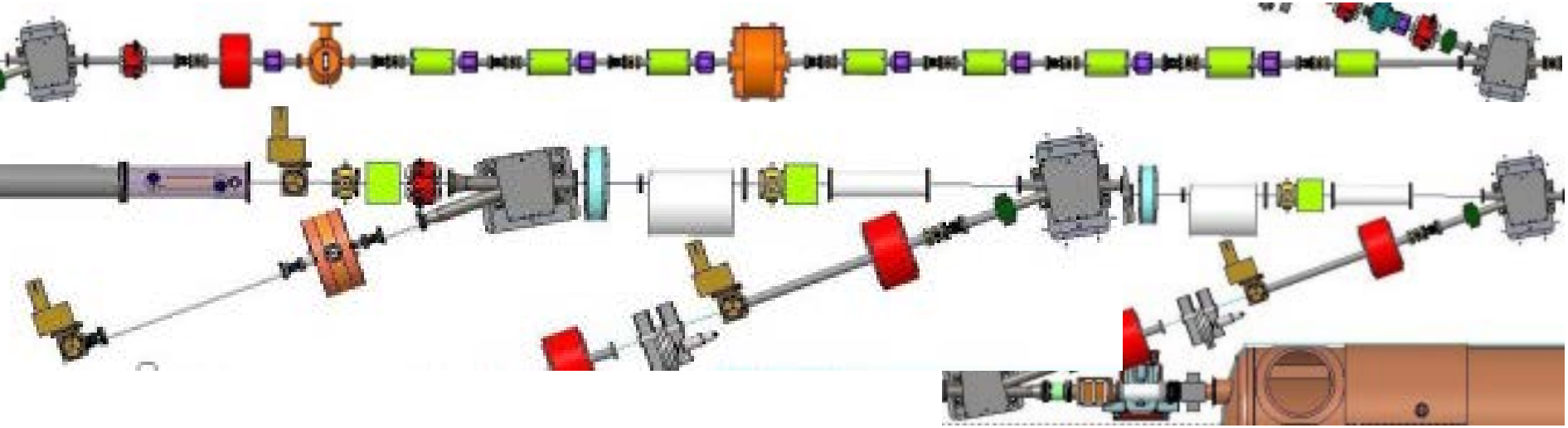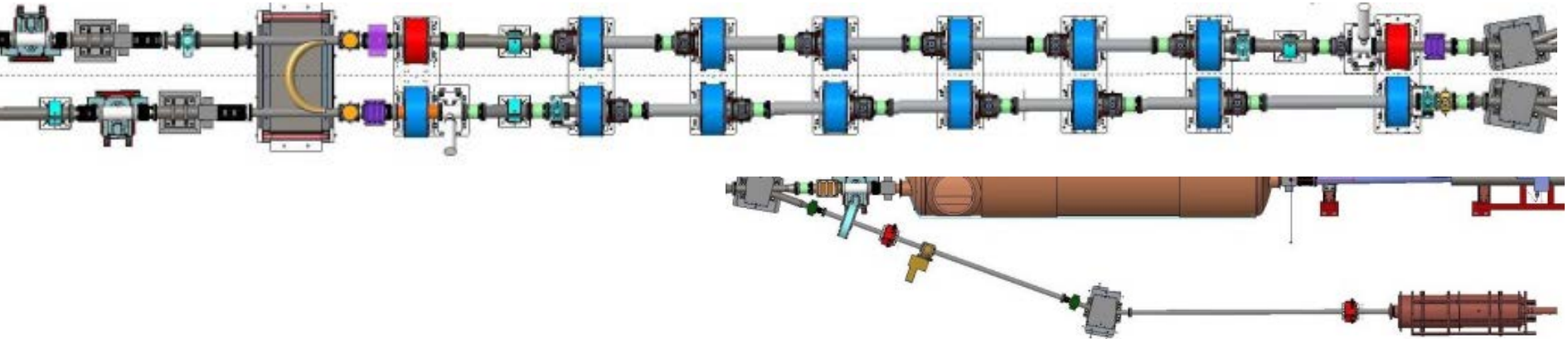
- **CW vs MacroBunch beam structure**
  - Alex reported that we are buying high power couplers capable of CW operation in the event that CW operation is required. Thus only additional RF power amplifiers would need to be added.
  - It is not yet clear if this is an advantage or disadvantage for BPMs. Certainly, CW operation would eliminate the possibility of using single electronics boards for ion & electron measurements. But, this would only strengthen the 700MHz electron beam position measurement.
- **Cathode Imaging**
  - Proposal to add cathode imaging to Cornell Gun design via a penetrated mirror in laser entry port to image cathode along the path of the laser. This depends on the useable aperture of the laser steering mirror that would also be used for imaging the cathode.
- **NMR Probe**
  - Caylar reported in a video conference this morning that they are making good progress with their NMR-20 instrument and is measuring 166Gauss with +/- 50mGauss noise at a 2.5 Hz measurement rate (400 msec sliding average window). Their goal is a resolution of 20 mGuass.
- **BPM Testing**
  - Rob H announced that test results have showed excellent rejection of the 700MHz electron signal while measuring the low frequency ion signal due to the use of the 10MHz diplexers (see slide 6).
  - Moreover, significant temperature dependance of the system shows the need for temperature controlled racks for the BPM electronics. One long term drift has yet to be correlated with a cause.
  - More testing with 700MHz trains of short bursts is necessary to investigate suspected frequency dependance of electrical center of the buttons in the cube. We are investigating faster picosecond pulses, 700MHz ARB's and perhaps a properly matched Goubau Line or alternative structure for testing the button cubes.
- **ERL Profile Monitors**
  - Joe explained during a discussion about the Ferrite modified chambers that we plan to move forward with totally new designs for the profile monitor chambers in order to match the beam line aperture and to correct for impedance.
- **Flying Wire Profile Monitors**
  - We decided to move forward with requesting a serious quote for the procurement of TWO units from Cornell. We may be fortunate enough that single macro bunch profile measurements of the beam are representative of the high power beam BUT the Flying Wire PM is the only instrument that can provide profile measurement during operation.
- **Longitudinal Phase Space Monitor**
  - Kevin Mernick explained that a recent meeting was held where the parts of the commissioning beam line were assigned to people to work on, as follows. Dmitry will present the beam line optics in a meeting next week. BPMs and solenoids may need to be added.
    - Fast Kicker – KM, MMB, KSS
    - Internal Beam dump – JT, MMB
    - Transverse Deflecting Cavity – BX, JT, VV (Cornell)
    - YAG Screens, Cameras – TM
    - Other Diagnostics (BPMs?) – RM, RH
    - Energy Measurement - MM
    - Beamline Optics – DK, JK
    - Magnet Power Supplies – DB (I'll at least clue Don in re: this minor side project)
    - Vacuum, Beamline Layout/Construction – JT
- **Electrostatic Energy Spectrometer**
  - Peter is working on the preliminary design of the deflector that an ME will be assigned to work on to aid in developing a cost estimate. I (Toby Miller) will work on estimating the YAG profile monitors and associated optics and scanning motion control for the beam line.
- **Recombination Monitor**
  - Felix has a promising RHIC lattice that can produce ~8sigma of separation between Au+78 and Au+79 ions in dispersion bumps in the cold defocusing quads set up using the gamma t quads.
  - A Roman Pots style detector will need to be designed to move a detector into the dispersive space of the beam.
  - CERN is experimenting with installing beam loss monitors inside their crystats. The results could be useful here in choosing a suitable detector.
  - Wolfram pointed out a US vendor of Diamond Detectors, Applied Diamond, Inc. He also suggested considering new Plasma Radiation Detectors being introduced by Integrated Sensors, LLC
  - We discussed installing the double coincidence detectors for deuteron recombination detection as the detectors are outside of the vacuum. The yellow detector in the IP should work well but the blue detector has lots of material impeding the signal and will require further simulation to determine its effectiveness.