LEReC System

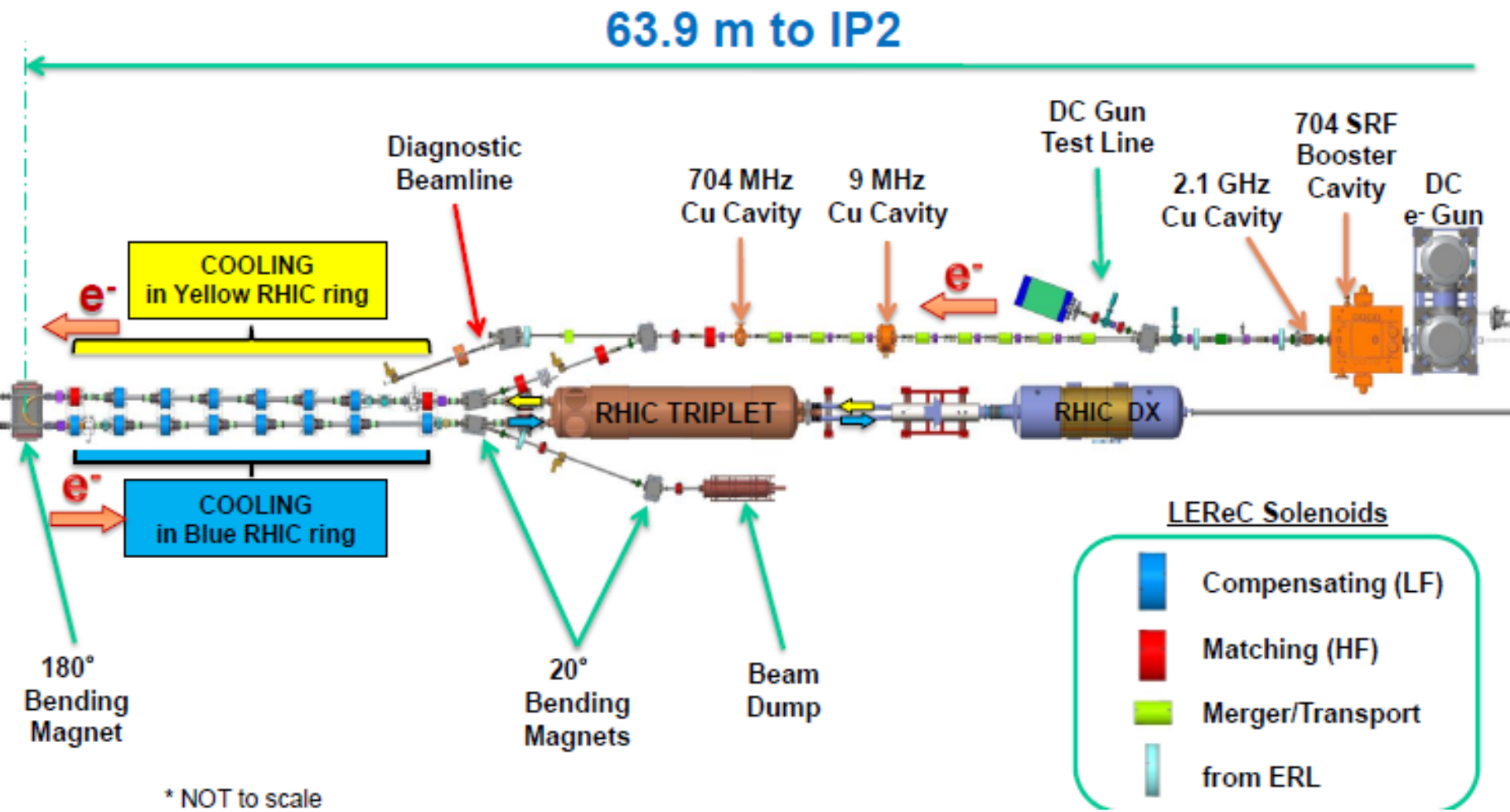

LEReC Injection section 2016

2.1 GHz Cavity:
The cavity will be installed next to the beamline to decouple its commissioning from the DC gun commissioning.

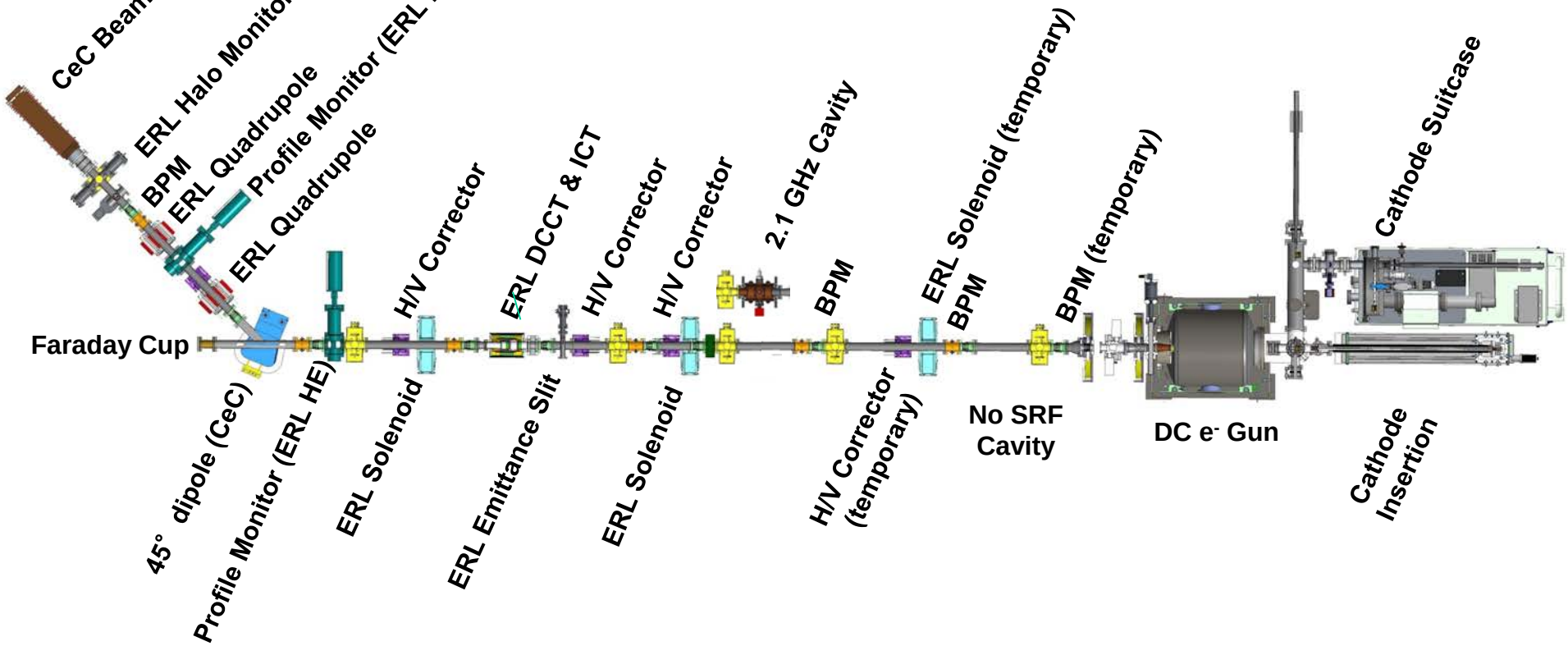

BROOKHAVEN NATIONAL LABORATORY

Office of Science
U.S. DEPARTMENT OF ENERGY

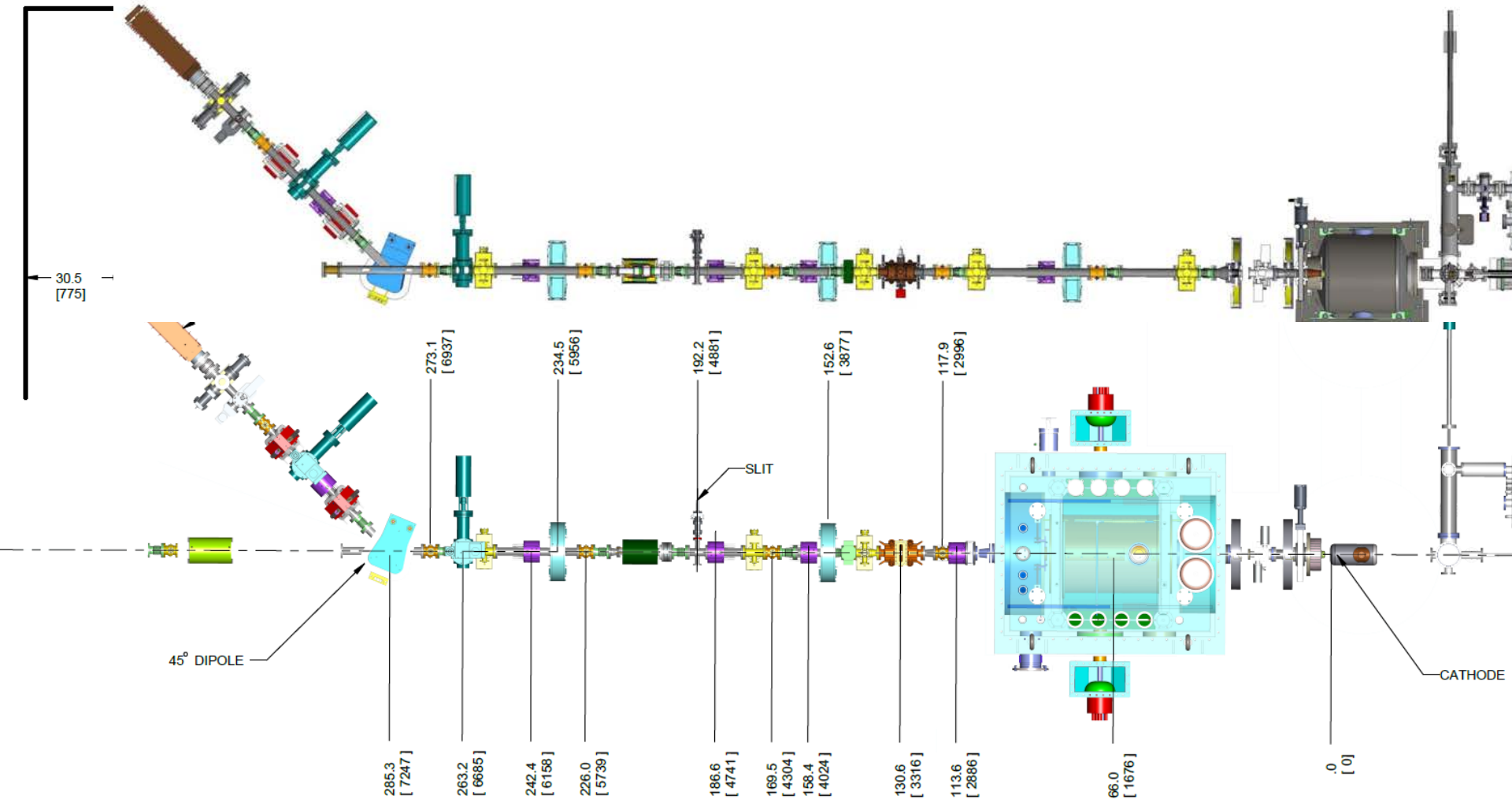

BROOKHAVEN NATIONAL LABORATORY

Office of Science
U.S. DEPARTMENT OF ENERGY

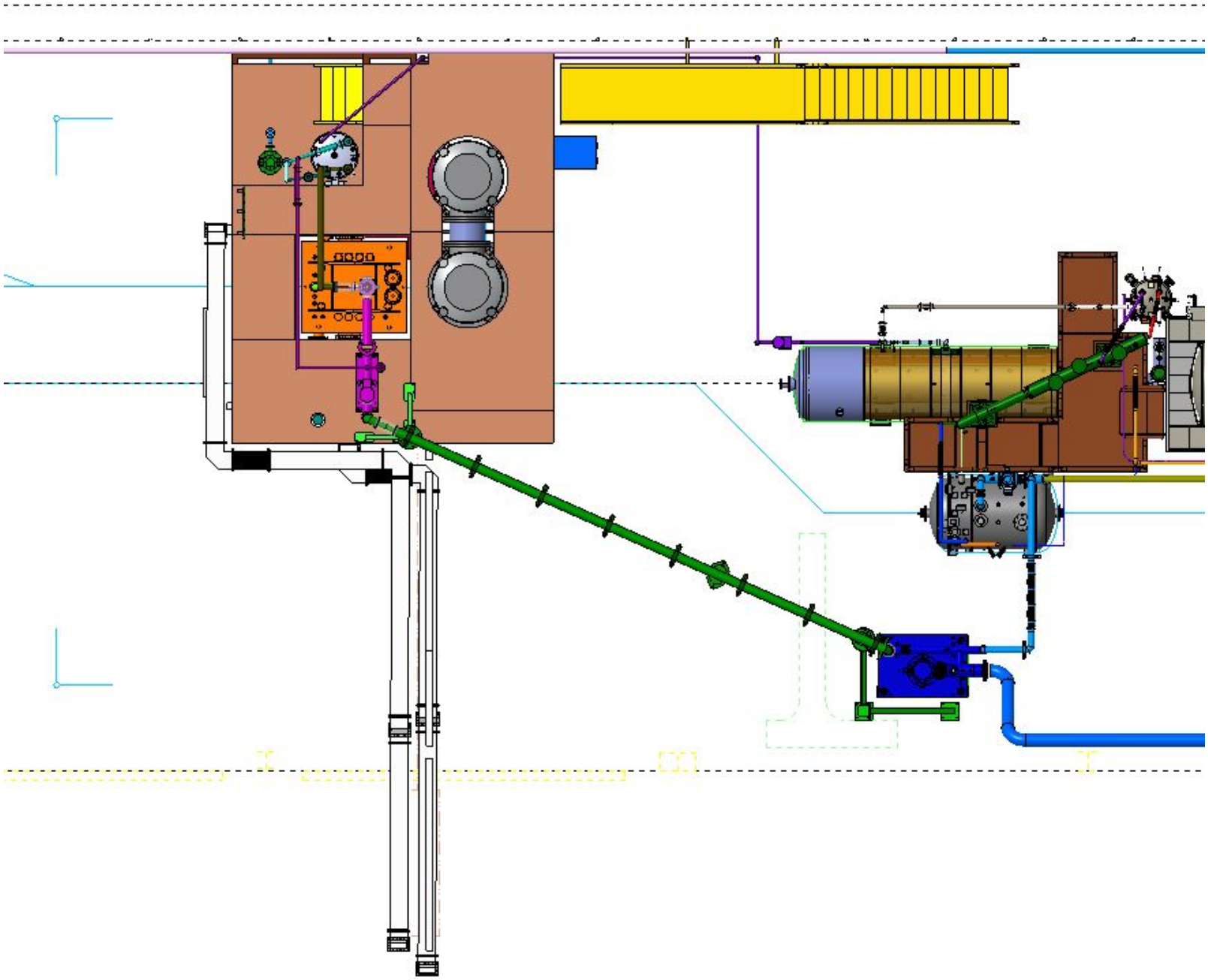

Component Status

Magnets:

- (3ea) ERL solenoids – remove and magnet measurement
- (4ea) H/V Corrector magnets – New GtB aircool design
- (2ea) ERL quadrupoles – remove, need magnet measurement?
- (1) CeC 45° dipole magnet – new vacuum chamber (beam impedance analysis?)
- Magnet base, survey adjustment hardware, and stands for the all above.

Beam Dump

- CeC design dump (isolated faraday cup?)

Component Status

Diagnostics:

- DCCT and ICT from ERL (internal RF shielding analyzed) any further modifications?
- (1) ERL HE Profile Monitors (new internal RF shield for vacuum chamber, ferrites, new larger YAG screen) any further modifications?
- (1) ERL LE Profile Monitors – no changes ?
- (1) Emittance slit drive (new vacuum chamber and slit shape)
- (1) ERL Halo Monitor (same vacuum chamber)
- (1) Faraday cup (ceramic insulated vacuum flange?) 1 watt limit?

Laser Systems:

- Laser building modifications
- Transport line
- In tunnel optics table

Vacuum Components

- Need a P&ID including DC gun and cathode carts
- Shielded bellows drawing/order
- “Standard” shielded pump tee drawing/order

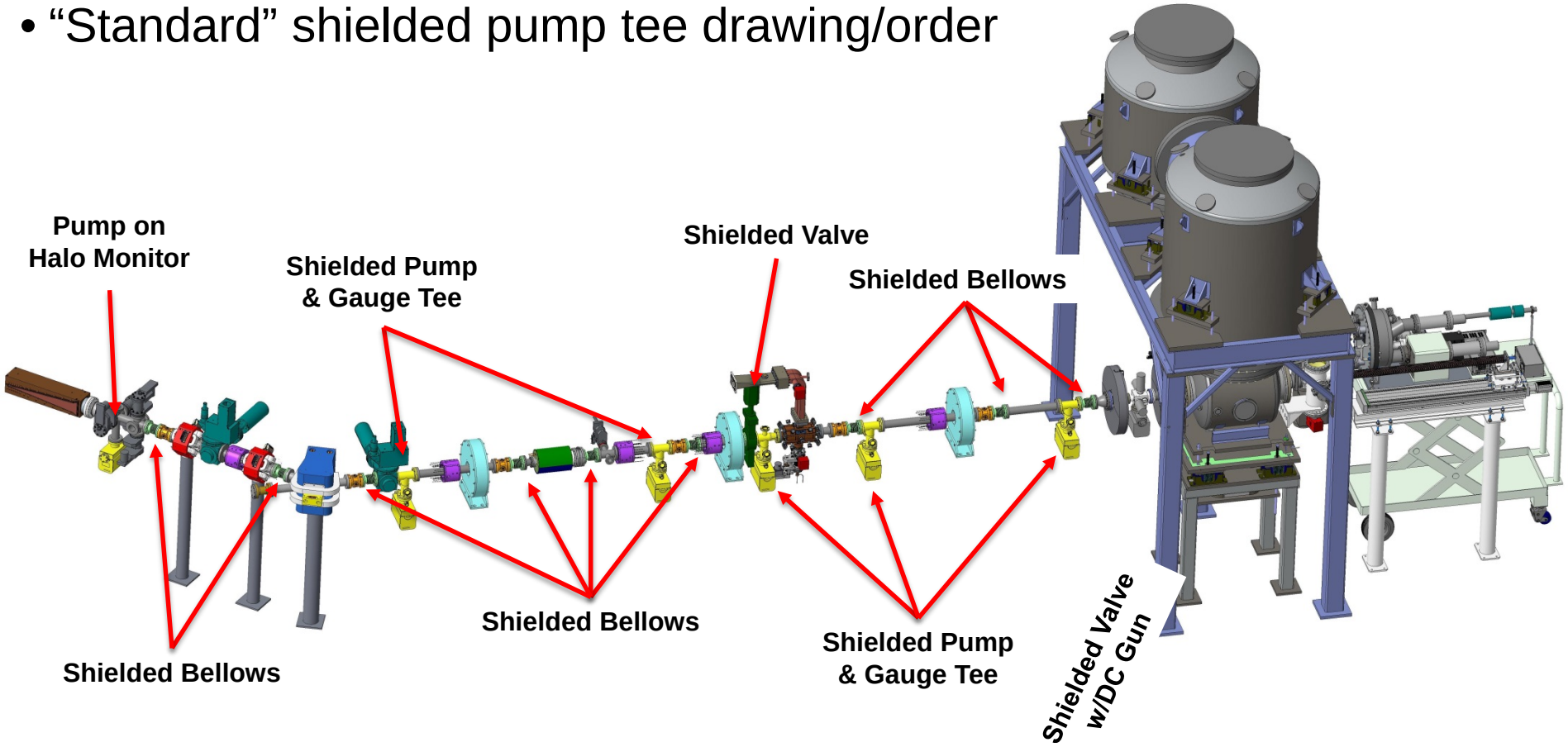

BROOKHAVEN NATIONAL LABORATORY

Office of Science
U.S. DEPARTMENT OF ENERGY

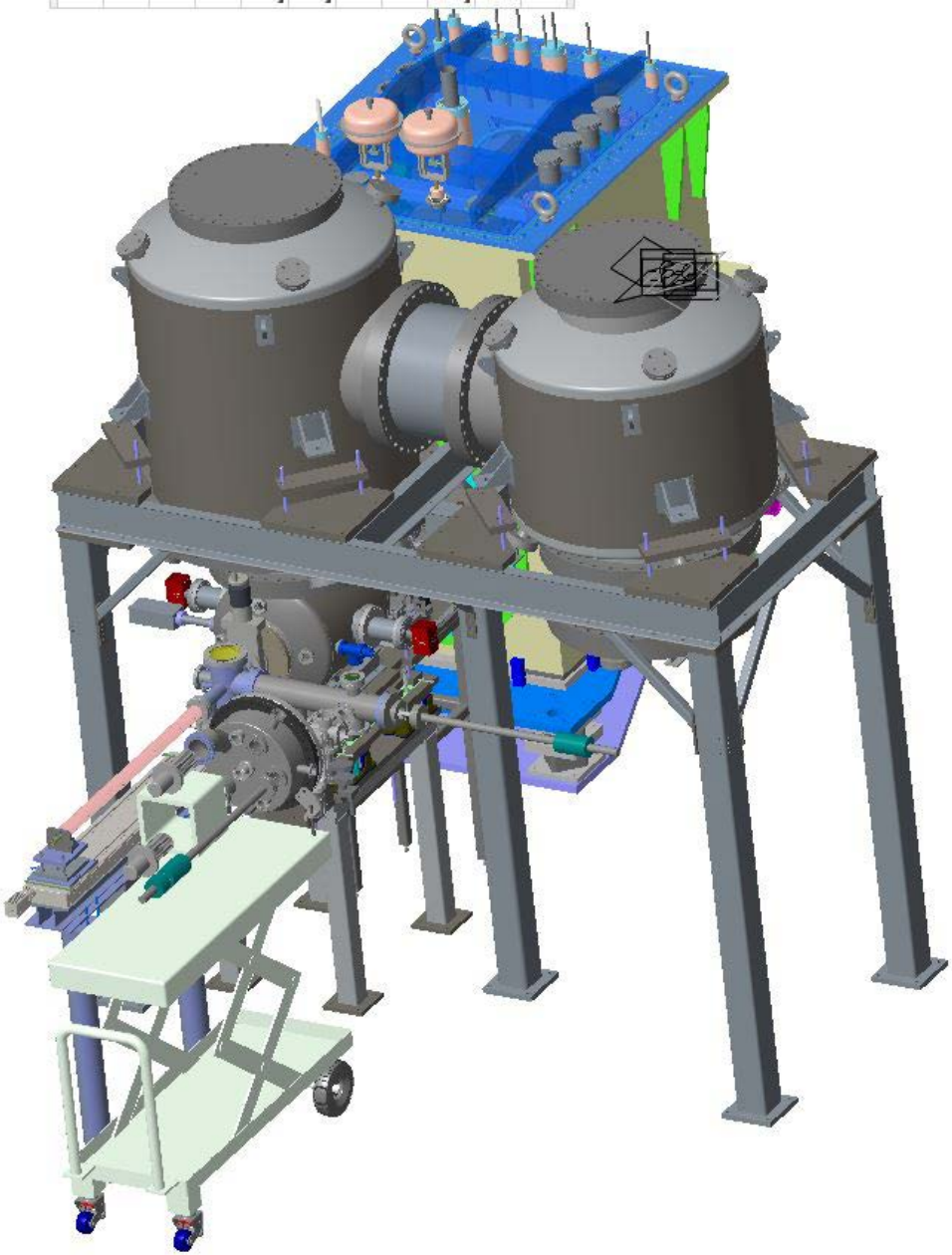

DC Gun Vacuum

- Ion pump and NEG
- Bake-out 150-200C
- Extractor vacuum gauge
- Remote bleed valve for HV conditioning
- 1 shielded, 1 non-shielded valve

Cathode Systems Vacuum

- Bake-out 150-200C
- Vacuum gauges and pumps
- Plug in cables for transport cart pumps and gauges – remote monitoring
- Bake-able Vacuum “load lock” with remote monitoring and remote temperature control
- Valves w/interlocked controls (local MPS)
- Tunnel switches for interlocked “load lock” valves

Gun Section

1. 1 p.s. Kaiser High Voltage ps for gun
2. 1 p.s. High Voltage Anode Bias ps. Does this go into the tunnel? Need specs from Cornell
3. 1 p.s. (BC1). Need I. Need L. Guess at 6A from CJ. Using ERL BiRa 20V, 6A p.s.
4. 2 p.s.'s (Corr 24), using Cornel V & I spec of ps = 12V & 1A. Need R & L & I. So we will be using ERL BiRa 20V, 2A ps's.
5. 6 p.s.'s (GIS1-GIS5 & GICS1) using ERL Sol's. Need L & I. Purchase new GEN 60-12.5 p.s.'s.
6. 12 p.s.'s (Corr 27-32). Using ERL CeC correctors. Need R & L & I. Assume we use ERL BiRa 20V, 6A
7. 8 p.s.'s (Corr 25H, V, Q, SQ & Corr 26H, V, Q, SQ). Have magnet specs from George M e-mail 3/30/16. ERL SHIM ps's 15V 10A, limit 100W.
8. 1 p.s. ComD1. CeC 45° dipole. Purchase new GEN 100ppm ps. 16V 150A
9. 2 p.s.'s. Q5 & Q6. ERL Quads. Need V & I. Use ERL 15V 10A SHIM ps (limit 100W), taking quad from ERL?

Diagnostic Line

1. 6 p.s.'s (Corr 37-39). Using ERL CeC correctors. Need R & L & I. Assume we use ERL BiRa 20V, 6A
2. 1 p.s. (DLS1) using ERL Sol's. Need L & I. Purchase new GEN 60-12.5 p.s.'s.
3. 1 p.s. (20°-5). Purcahse CAEN 20V 5A
4. 1 p.s. (Q7) Using ERL Quad. V & I needed. Use ERL SHIM 15v 10A (limit 100W)

4/25/16
Phase 1 Block 15.vsd
132 ps's total
(7 replaced by booster)

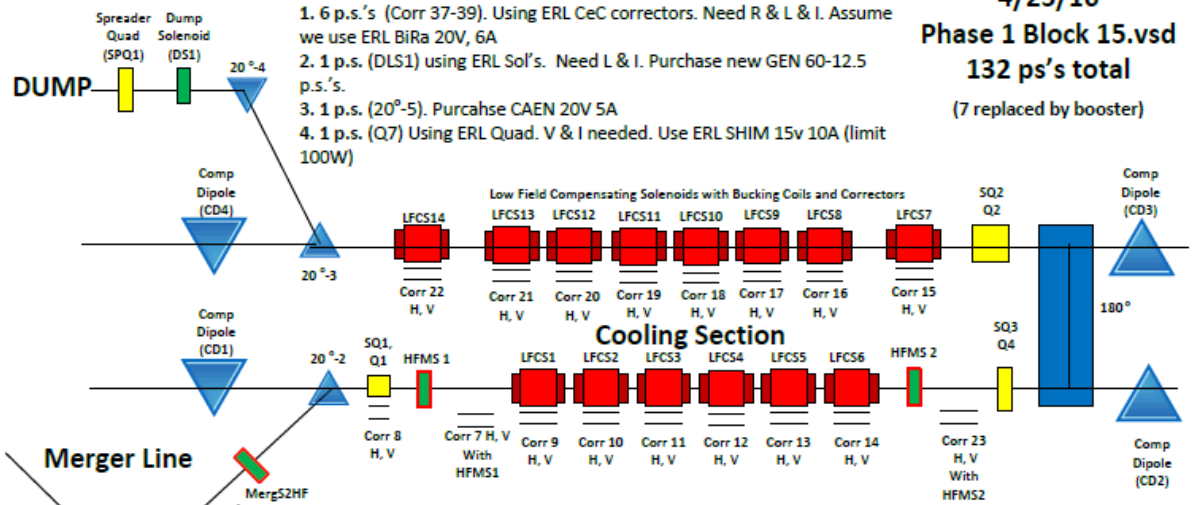

Gun Injection

Make laminated magnet with trim winding??

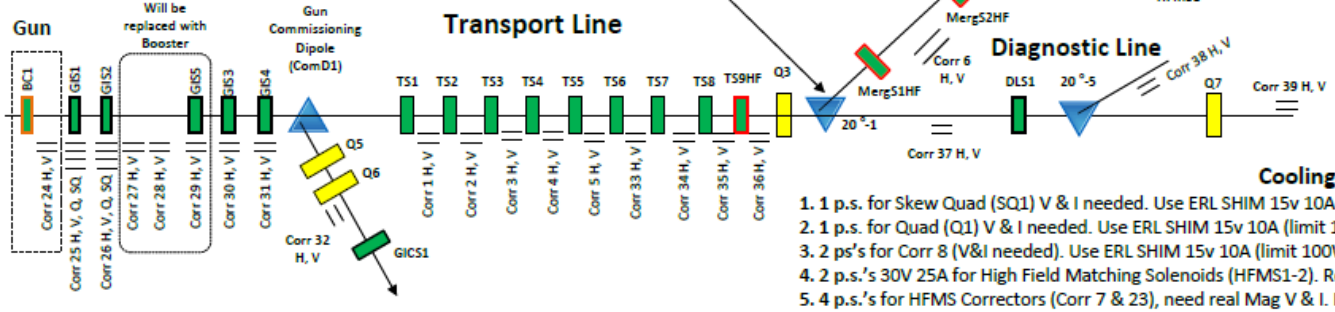

Changes from Block 11
1. Removed TS10 & TS11
2. Moved Corr D1 after GS4
3. MergS1-S2 are the same type of Sol's as TS1-TS9
4. Added GS4 and GS5
5. Added GCS1
6. GS1-GS5 and GCS1 are all ERL type Sol's
7. Added Corr 27 - 38
8. Added Q, SQ only to Corr 25 and Corr 26
9. Added BC1
10. TS1-TS9 and MergS1-S2 are new Sol's. Use Karim's design
11. Include High Voltage Anode Bias ps for gun, need info from Karl Smolenski
12. Include Kaiser HI V p.s. for Gun

Transport Section

1. 8 p.s's ERL SHIM 15V 10A (limit 100W each) for 8 Sol magnets (TS1-8) . These magnets are 100G @ 6.1A. They may become 200G.
2. 18 p.s.'s for 9 ERL/CeC Corrector (Corr1-5 & 33-36) magnets. Need V & I, For now using 18 ERL BiRa 20V 6A p.s's.
3. 1 p.s. for High Field Solenoid (TS9). Same specs as HFMS in cooling section. Must still purchase.
4. 1 p.s. for one Quad, Q3, Use ERL 15V 10A SHIM ps (limit 100W), taking quad from ERL?

Merger Section

1. 2 p.s.'s 30V 25A for two 100G Solenoid Magnets (MergS1HF & MergS2HF). Must still purchase
2. 2 p.s.'s needed for one Corrector magnet (Corr 6). Need V & I, For now using 2 ERL 20V 6A BiRa p.s.'s.
3. 2 p.s.'s, ERL Kepco BOP GL 50V 20A or new CAEN 20V 5A for 20° magnets. Merger Section has 20°-1 on its own p.s. and 20°-2 on its own p.s. 20°-1 will also have a new laminated magnet.
There is a possibility of using a shunt p.s. on 20°-1 but this is not included in count now.

Cooling Section

1. 1 p.s. for Skew Quad (SQ1) V & I needed. Use ERL SHIM 15v 10A (limit 100W)
2. 1 p.s. for Quad (Q1) V & I needed. Use ERL SHIM 15v 10A (limit 100W)
3. 2 ps's for Corr 8 (V&I needed). Use ERL SHIM 15v 10A (limit 100W)
4. 2 p.s.'s 30V 25A for High Field Matching Solenoids (HFMS1-2). Received
5. 4 p.s.'s for HFMS Correctors (Corr 7 & 23), need real Mag V & I. For now using ERL 15V 10A SHIMS
6. 1 p.s. 150V 22A for LFCSc1-6 cores 6 in series. Received.
7. 1 p.s. 150V 22A for LFCSbc1-6 buck coils (2x) 6 in series. Received.
8. 28 p.s.'s 20V 2A BIRA MCOR for Correctors (Corr 9-22) with LFCS magnets.
9. 1 p.s. for SQ3 V & I needed. Use ERL SHIM 15v 10A (limit 100W)
10. 1 p.s. for Q4 V & I needed. Use ERL SHIM 15v 10A (limit 100W)
11. 1 p.s. for 180° magnet. Have LSII p.s. in house. Assembling it. Add FWD to COTS ps?
12. 1 p.s. for SQ2 V & I needed. Use ERL SHIM 15v 10A (limit 100W)
13. 1 p.s. for Q2 V & I needed. Use ERL SHIM 15v 10A (limit 100W)
14. 1 p.s. for Compensating Dipoles (CD1-4). All 4 in series. Use one kepco 50V 20A p.s.
15. 1 p.s. 30V 25A for LFCSc7 core single. Purchase new GEN 30-25
16. 1 p.s. 30V 25A for LFCSbc7 buck coils 2 in series from one magnet. Purchase new GEN 30-25.
17. 1 p.s. 150V 22A for LFCSc8-13 cores 7 in series. Received.
18. 1 p.s. 150V 22A for LFCSbc8-13 buck coils (2x) 7 in series. Received.
19. 1 p.s. 30V 25A for LFCSc14 core single. Received.
20. 1 p.s. 30V 25A for LFCSbc14 buck coils 2 in series from one magnet. Received

Dump

1. 1 p.s. needed for one Spreader Quad Magnet (SPQ1), No V & I, told to use ERL 15V 10A SHIM p.s.
2. 1 p.s. 60V 12.5A needed for Dump Solenoid (DS1). Use ERL Solenoid
3. 1 p.s. Dump Section has 20°-3&4 in series on one 50V 20A kepco or one 20V 5A CAEN p.s.

Gun Section

1. 1 p.s. Kaiser High Voltage ps for gun
2. 1 p.s. High Voltage Anode Bias ps. Does this go into the tunnel? Need specs from Cornell
3. 1 p.s. (BC1). Need I. Need L. Guess at 6A from CJ. Using ERL BiRa 20V, 6A p.s.
4. 2 p.s.'s (Corr 24), using Cornel V & I spec of ps = 12V & 1A. Need R & L & I. So we will be using ERL BiRa 20V, 2A ps's.
5. 6 p.s.'s (GIS1-GIS5 & GICS1) using ERL Sol's. Need L & I. Purchase new GEN 60-12.5 p.s.'s.
6. 12 p.s.'s (Corr 27-32). Using ERL CeC correctors. Need R & L & I. Assume we use ERL BiRa 20V, 6A
7. 8 p.s.'s (Corr 25H, V, Q, SQ & Corr 26H, V, Q, SQ). Have magnet specs from George M e-mail 3/30/16. ERL SHIM ps's 15V 10A, limit 100W.
8. 1 p.s. ComD1. CeC 45° dipole. Purchase new GEN 100ppm ps. 16V 150A
9. 2 p.s.'s. Q5 & Q6. ERL Quads. Need V & I. Use ERL 15V 10A SHIM ps (limit 100W), taking quad from ERL?

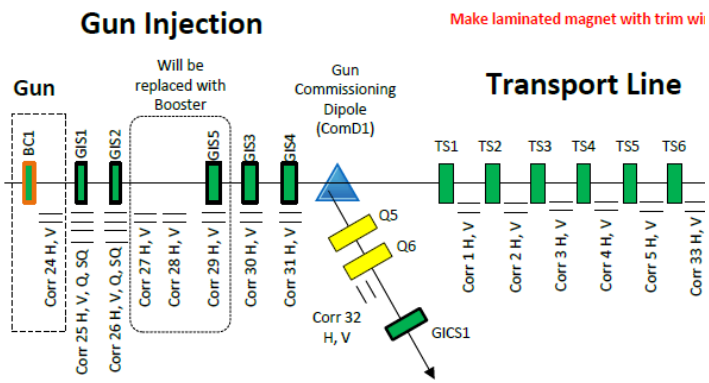

- Need PS for clearing electrodes
- Need to clarify H/V corrector count

  Correctors 27 and 28

  Corrector between GIS3 and GIS4

  At meeting – no: Mu metal shielding will be used so more correctors are not needed.

- Solenoid at end of dump line?

  At meeting - no

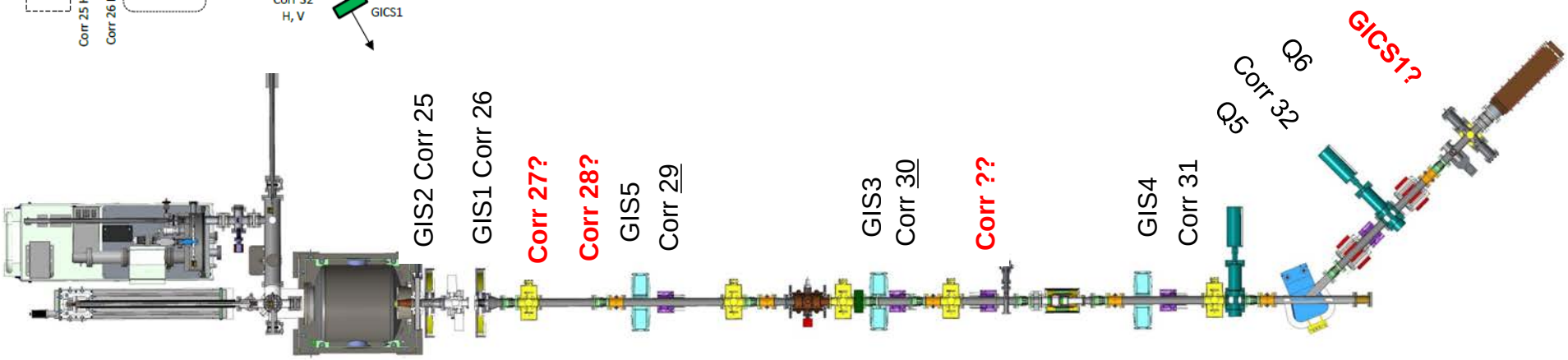

1. Solenoid drawings complete, checked
2. Corrector drawings complete, (Bakeout)
3. Mirror assembly complete, checking
4. Vacuum chambers (3) near complete, checking
5. Profile Monitor near complete, checking
6. Support Stands modeling
7. Update Booster Cavity U/S
8. Update Booster Cavity D/S

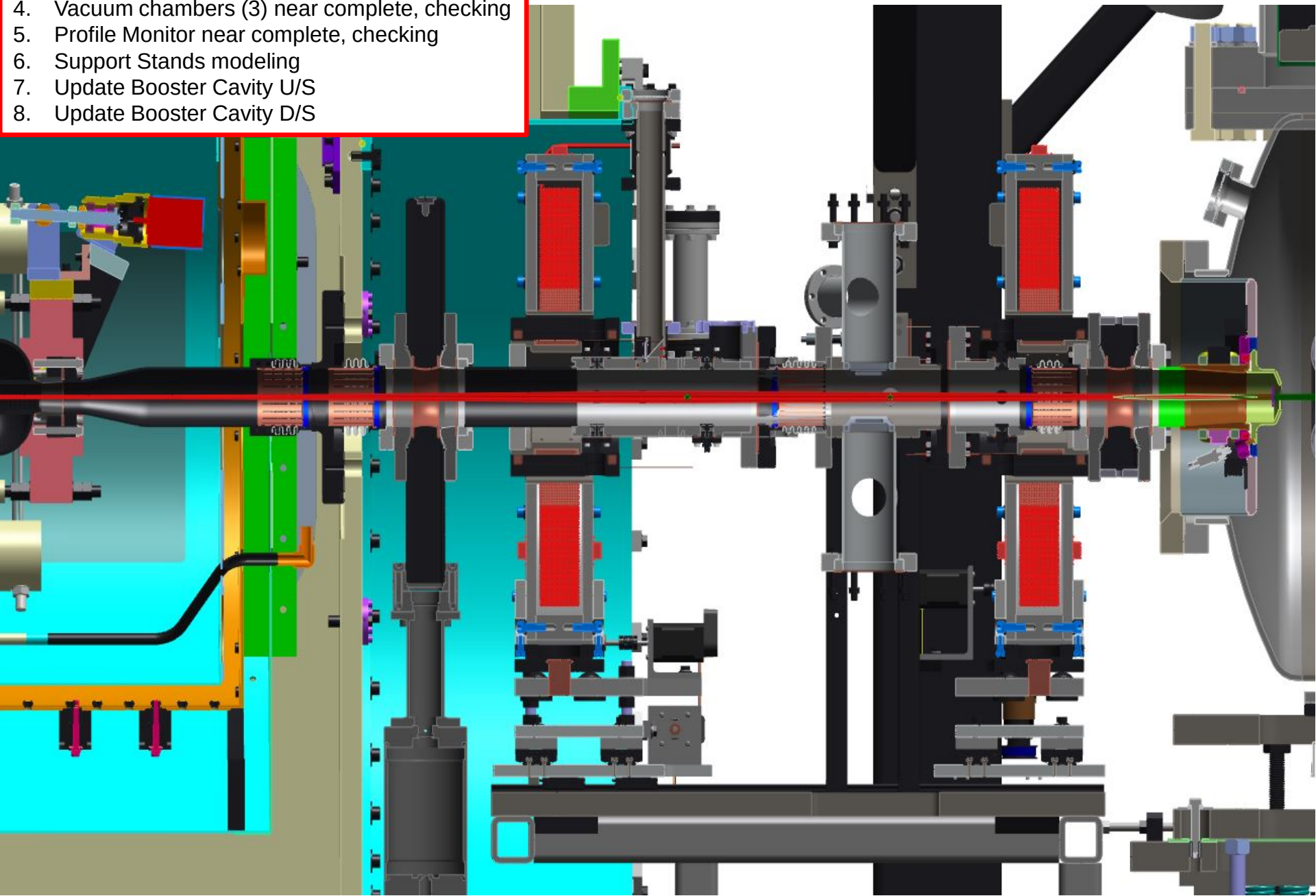

Component Status

Other:

2.1 GHz Cavity (off beamline)

- 1002B PA, ACS interlock, wave guide, tuner drive, stand

704 MHz Cavity (in place, on beamline)

- 1002B PA, ACS interlock, wave guide, tuner drive, stand

9 MHz RHIC Cavity (in place, on beamline)

Cognizant Engineers

Project Engineer: Tuozzolo

- Cathode system: Liaw, Tuozzolo, Hamdi,
- Laser System: Zhao, Sheehy
- DC Gun: Liaw, Costanzo, Halinski Cornell – Karl Smolenski Cornell
- Power Supplies: Bruno
- GtB Transport Line: Nayak, Halinski
- Magnets: Mahler
- Beam Diagnostics: Miller, Gassner, Weiss
- Vacuum: Mapes, Steszyn
- Beam Dump: Fite, Corbin
- Warm RF Cavities: Zaltsman, Smith, Brutus, DeSanto
- Controls: Jamilkowski, Costanzo

Cognizant Engineers

Project Engineer: Tuozzolo

- Cathode system: Liaw, Tuozzolo, Hamdi, deMonte
- Laser System: Zhao, Sheehy, Bellavia, Taddonio
- DC Gun: Liaw, Costanzo, Halinski Cornell – Karl Smolenski Cornell
- Power Supplies: Bruno
- GtB Transport Line: Nayak, Halinski
- Magnets and mu metal: Mahler
- Beam Diagnostics: Miller, Gassner, Weiss
- Vacuum: Mapes, Weiss, Steszyn
- Beam Dump: Fite, Corbin
- Warm RF Cavities: Zaltsman, Smith, Brutus, DeSanto
- Controls: Jamilkowski, Costanzo, Altibanous