Low-Energy RHIC electron Cooling (LEReC)
MPS meeting

Layout of LEReC electron accelerator

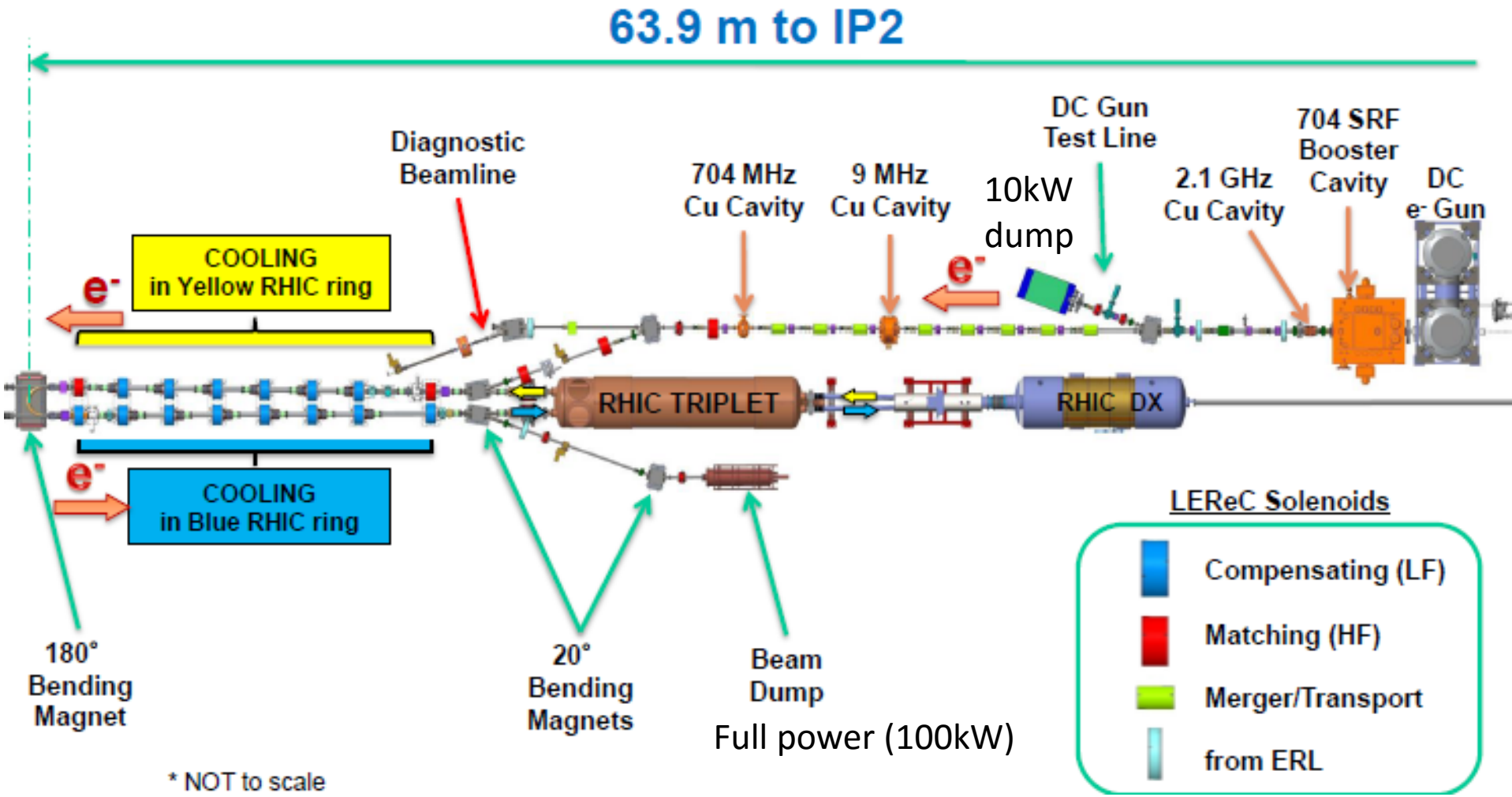

LEReC Gun to RHIC transport line system

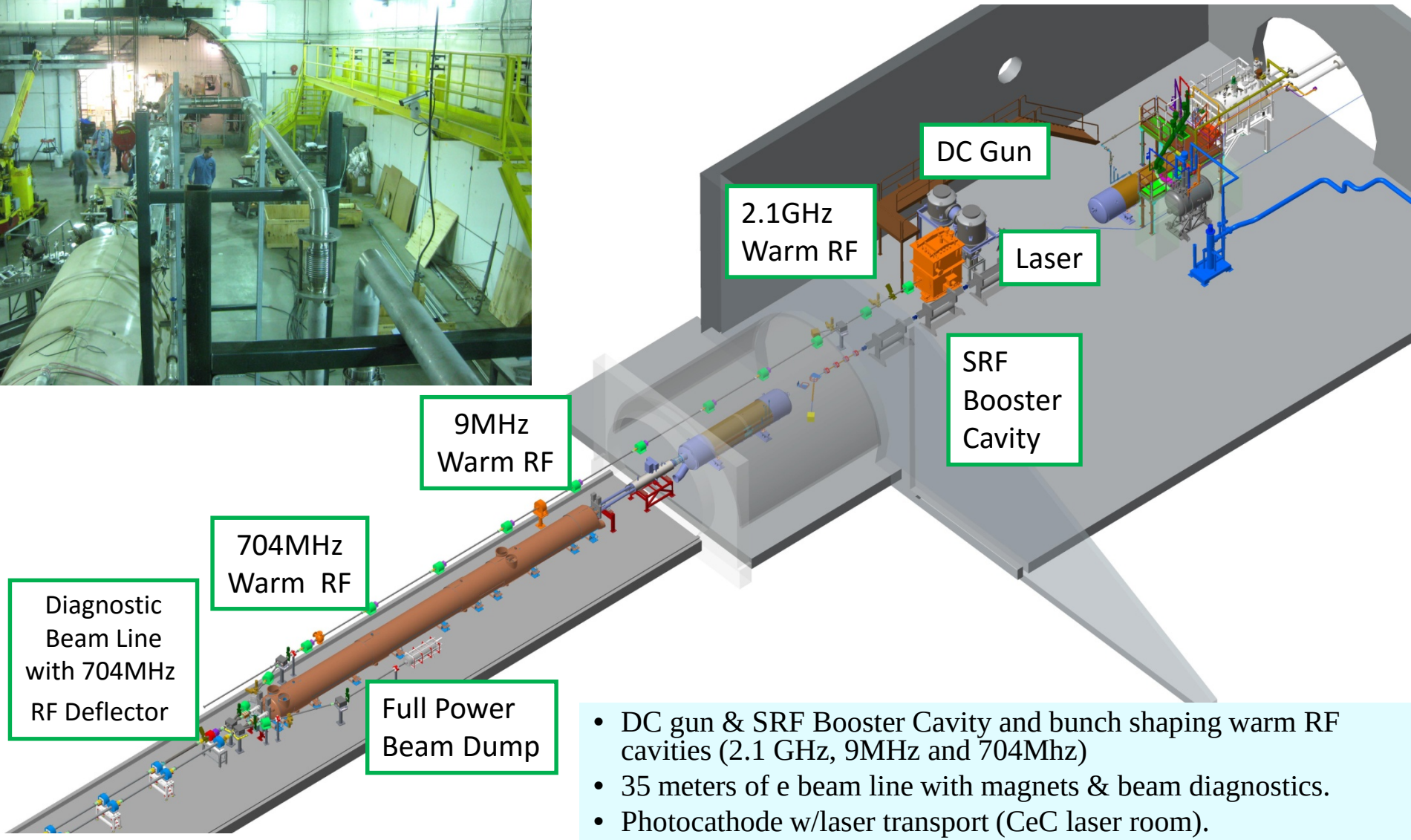

- DC gun & SRF Booster Cavity and bunch shaping warm RF cavities (2.1 GHz, 9MHz and 704Mhz)
- 35 meters of e beam line with magnets & beam diagnostics.
- Photocathode w/laser transport (CeC laser room).
- Diagnostic line with 704 MHz RF Deflector cavity

LEReC electron beam requirements

Electron beam requirement for cooling			
Kinetic energy, MeV	1.6	2.0	2.6 (LEReC+)
Cooling sections	2x20 m	2x20 m	
Electron charge per ion bunch	3.9 nC (30x130pC)	3.9 nC (30x130pC)	
RMS norm. emittance	< 2.5 um	<2.5 um	
Average current	35 mA	35 mA	45mA
Full beam Power	56 kW	70 kW	117 kW
RMS energy spread	<5e-4	< 5e-4	
RMS angular spread	<150 urad	<150 urad	

Full power beam dump: up to 130kW (limited by RF amplifiers: 2x65kW). Existing 1MW ERL beam dump will be used.

LEReC timeline

2015 – 2016:	DC photoemission gun construction by Cornell University.
Aug.-Oct 2016:	**DC gun installation & conditioning at BNL in IR2**
Oct-Dec 2016:	**Laser transport installation; DC gun beamline installation**
Jan. 2017-June 2017	**DC gun and laser tests with beam ("DC gun test beamline")**
2016-17:	**Tests of Warm RF cavities**
July 2017-	Move and install SRF components, beam dump, etc.
2017-March 2018:	Systems commissioning
April - Sept 2018:	**Commissioning of full LEReC accelerator with e-beam in RHIC tunnel**
End of 2018:	**RHIC Run-19 Beam Energy Scan-II physics program (commissioning of cooling with Au ion beams)**

Planned LEReC commissioning Approval process

Stage 0 (2016-17): DC Gun tests

Will apply for exempt accelerator status (operation in RHIC tunnel)

- DC gun condition during RHIC shutdown
- with beam: starting with low power (up to 500 kV, few uA) for gun and laser commissioning
- with potential to go to higher power (maximum 500kV, 20 mA, maximum 10kW),

2018:

Stage 1: Full LEReC beam line, low power (approval for 2.6 MV, 2 mA?)

need IRR and ARR by January 2018
(e-beam commissioning start planned for April 2018)

Stage 2: Full LEReC beam line, full power (approval for 2.6 MV, 50 mA, 130kW)

allows for full e-beam parameters
need IRR and ARR by April 2018
(cooling commissioning start planned for October 2018)

Operations ARR for RHIC

allows for RHIC operation with cooler
plan to combine with Stage 2 ARR

LEReC Injection section 2016

DC gun tests beamline

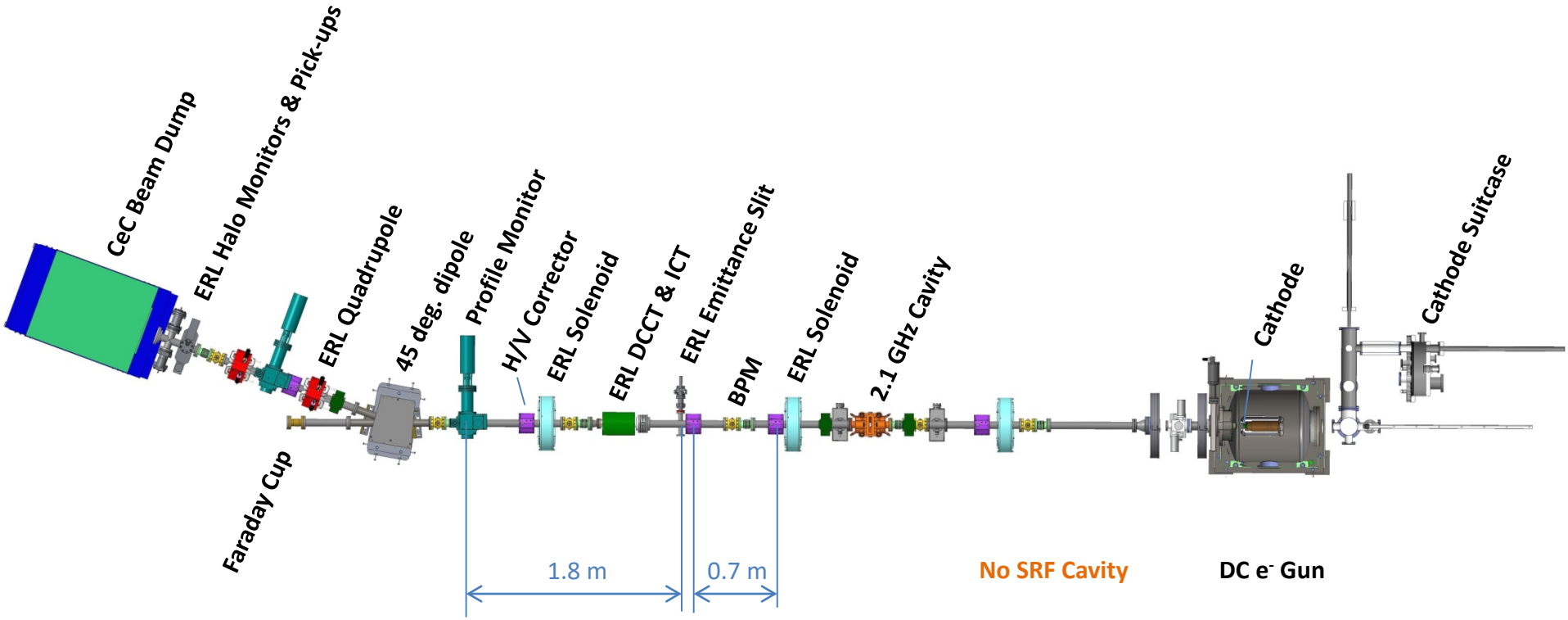

LEReC Injection section 2016

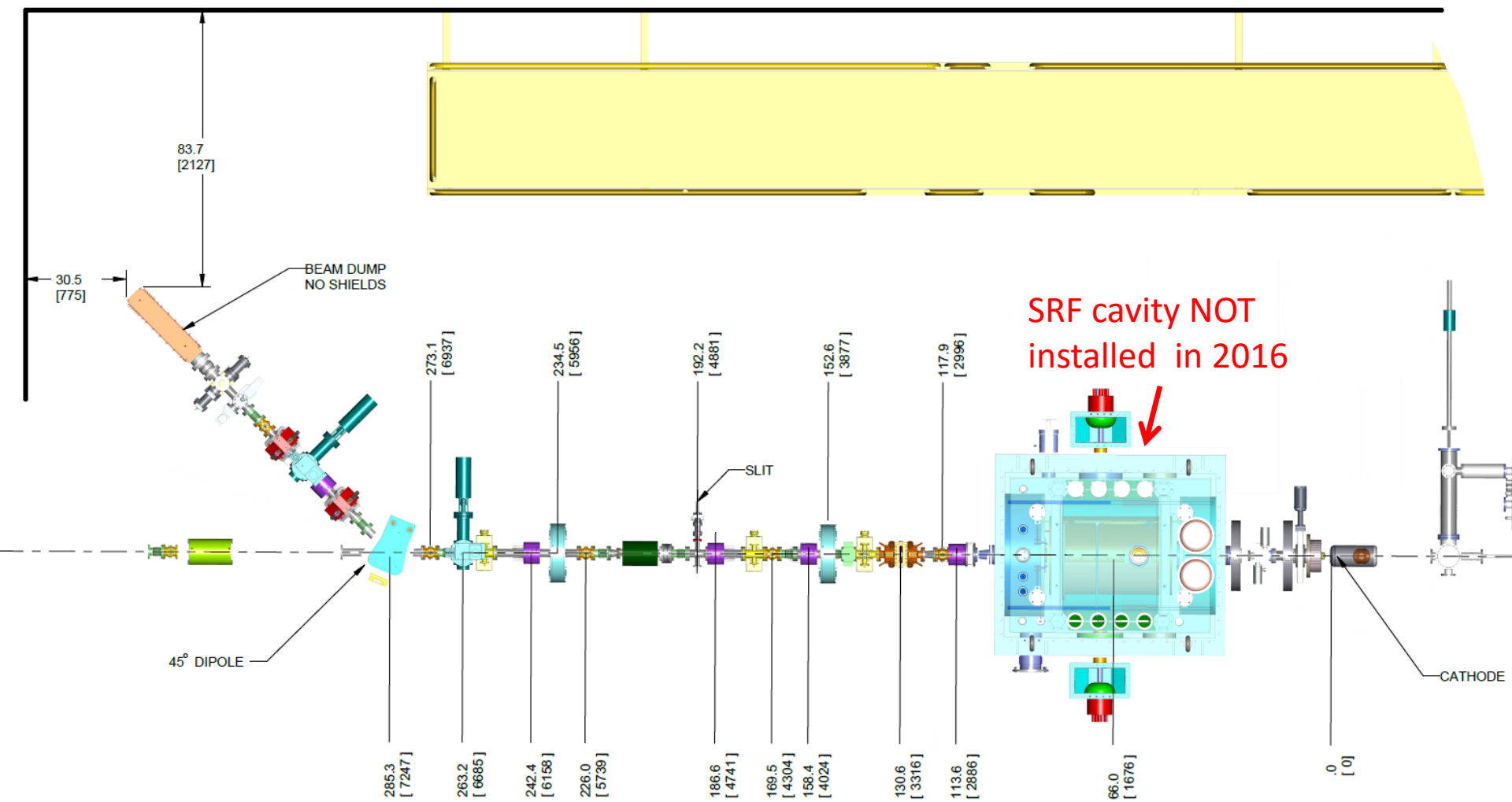

DC gun test beamline 2016

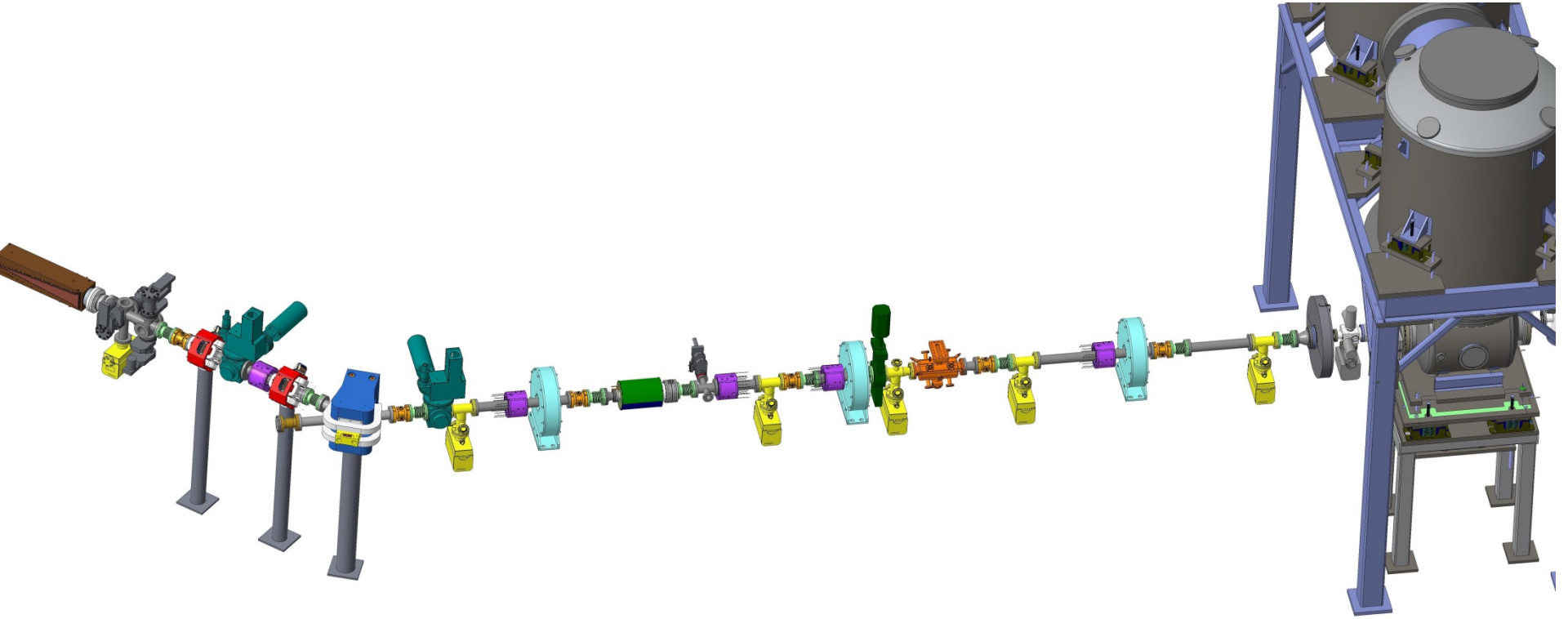

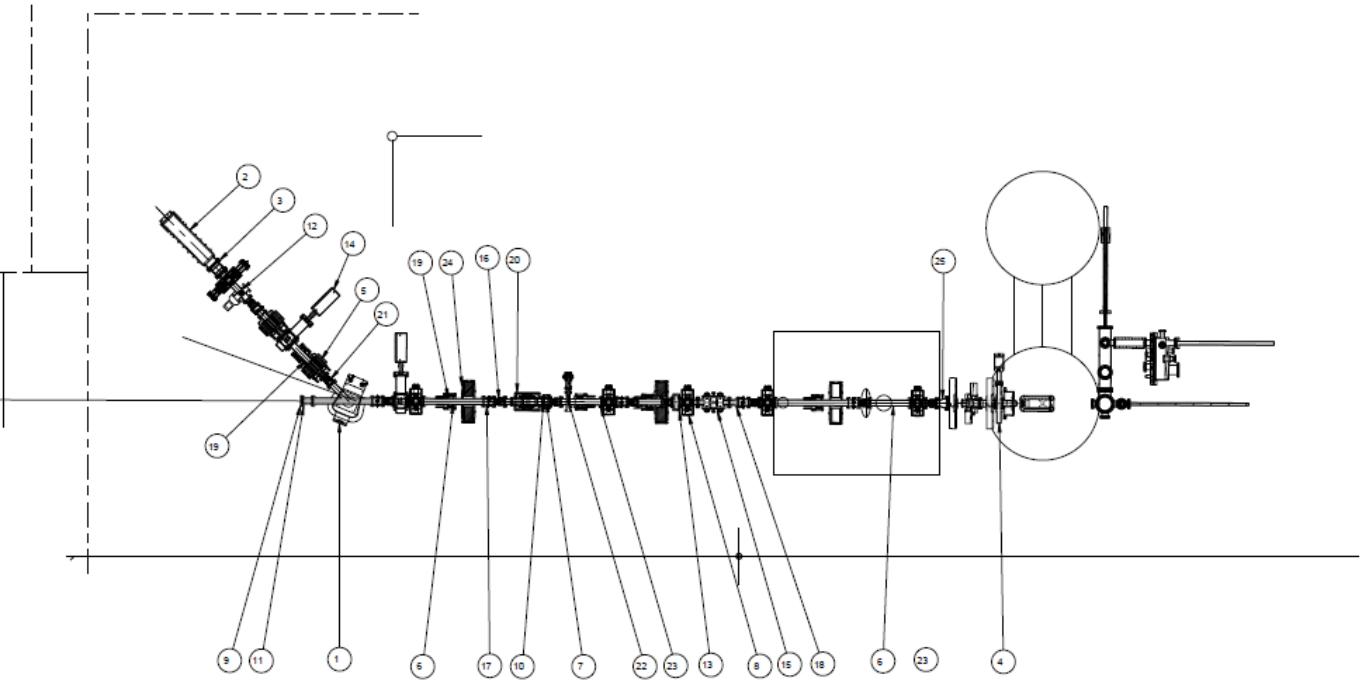

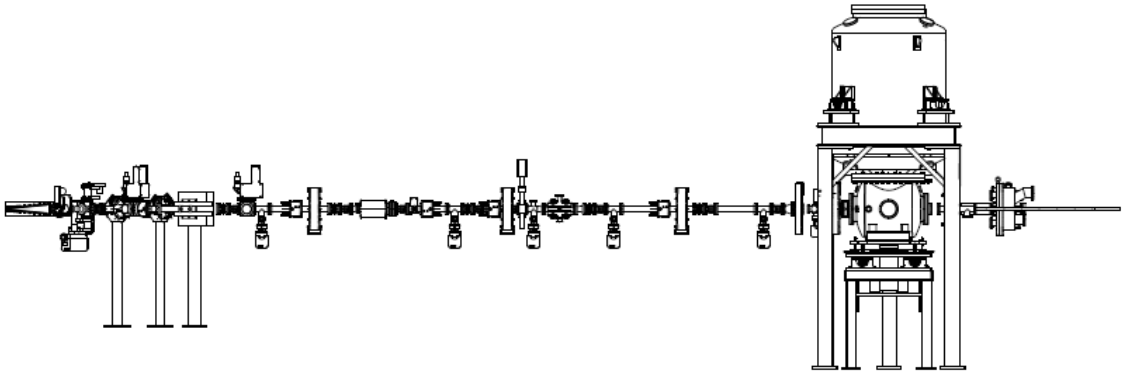

2016 CONFIGURATION

QTY	ITEM NUMBER	PART NUMBER	DESCRIPTION	REMARKS
1	25	CRN600X450		
3	24	010606262	SOLENOID ASSEMBLY	
4	23	3024M0043	PUMP TEE 4.5 CF	
1	22		PEPPER POT	
1	21		DIAGNOSTIC LINE 1	
1	20	010616062	DCCT ASSEMBLY	
5	19	3051M0000	CORRECTOR, DC-GUN,ASSEMBLY	
1	18		CONICAL REDUCER, 0.25 TO 0.20 APERTURE	
6	17	3070M0081	BPM ASSEMBLY, 15 MM	
10	16	3090M0107	BELLOWS	
1	15	3030M0001 STE	1 ghz warm rf cavity	
8	14			
1	13	47236-C644	GATE VALVE	VAT
4	12		HERL SINGLE HOLD	RADIABEAM
1	11	CFT30V2386	CERAMIC BREAK, 30Kv, SST, 4.50"CF	LESKER
3	10	RF600X450	ZERO LENGTH REDUCER, 6" DIA. X 4.50" DIA.	KURT J. LESKER
1	9	F0450X000N	FLANGE, CF, 4.50 BLANK, NR, 304L SST	KURT J. LESKER
6	8	75S-XX-4D	ION PUMP, 75S	GAMMA VACUUM
1	7	CF6"	FCT	BERGOZ
7	6		PIPE 2.5 OD	
2	5	010606064	ERL QUADRUPOLE	
1	4		DC GUN SOLENOID LASER	
1	3	0060M0036	CUSTOM CERAMIC BREAK	
1	2	0081M0000	BEAM DUMP ASSEMBLY	
1	1			

BILL OF MATERIALS

PRELIMINARY

3015M0193	1
LISTED ON DRAWING NO.	QTY. PER ASSY.

APPLICATION

INTERPRET IN GENERAL ACCORDANCE WITH ASME Y14.5

UNLESS OTHERWISE SPECIFIED

DIMENSIONS ARE IN INCHES

ORDINATE TOLERANCES

.XX ±.01

.XXX ±.005

.XXXX ±.0005

ANGULAR TOLERANCE ±1°

125

BREAK SHARP EDGES

MAX. .005 - .015

DRAWN BY	Karim Hamdi	2016
CHECKED BY		
ENGINEERING		
MANUFACTURING		
QUALITY		
SAFETY		
CONTRACT		
DATE		

COLLIDER-ACCELERATOR DEPARTMENT

BROOKHAVEN NATIONAL LABORATORY

UPTON, N.Y. 11973

LEReC

LAYOUT 2016

INJECTION

SIZE	DRAWING NUMBER	REV.
E	3015M0135	A

CLA CATEGORY A-1 SCALE 1:00 WEIGHT 3667276723 SHEET 1 OF 1

2016 Shutdown schedule

	WBS	Name	Cost	Start	Finish
1447	1.12.2.2.2.	Design (Facility)	$0	4/29/2016	6/27/2016
1448	1.12.2.2.2.	Survey DC Gun Site	$0	6/27/2016	7/6/2016
1449	1.12.2.2.2.	Install DC Gun Stand	$8,200	7/6/2016	7/13/2016
1450	1.12.2.2.2.	Move DC Gun onto Surveyed Site & Install	$0	7/13/2016	7/20/2016
1451	1.12.2.2.2.	Survey Final DC Gun Position	$0	7/20/2016	7/27/2016
1452	1.12.2.2.2.	Connect Vacuum	$0	7/27/2016	8/10/2016
1453	1.12.2.2.2.	Connect Power, Water, Install HV Chamber, Charge with SF6	$0	7/27/2016	9/8/2016
1454	1.12.2.2.2.	DC Gun Installed & Support Systems Connected	$0	9/8/2016	9/8/2016
1455	**1.12.2.2.2.**	**DC Gun Installed Cathode Test**	**$0**	**7/1/2016**	**9/22/2016**
1456	1.12.2.2.2.	Multi-Cathodes transferring & Cathode Mechanism Available an	$0	7/1/2016	8/30/2016
1457	1.12.2.2.2.	Full Function (Vacuum & High Voltage PS) Cooperative Testing	$0	9/8/2016	9/22/2016
1458	1.12.2.2.2.	DC Gun Installed Cathode Installed	$0	9/22/2016	9/22/2016
1459	**1.12.2.2.3**	**704 MHz Laser Shutdown 2**	**$0**	**7/1/2016**	**12/29/2016**
1460	**1.12.2.2.3.**	**704 MHz Laser Installation**	**$0**	**7/1/2016**	**11/29/2016**
1461	1.12.2.2.3.	704 MHz Laser Components Available for Installation	$0	9/7/2016	9/7/2016
1462	1.12.2.2.3.	Pre-survey	$0	7/1/2016	7/12/2016
1463	1.12.2.2.3.	Install Laser Transport System Installation	$0	9/22/2016	11/18/2016
1464	1.12.2.2.3.	Survey for Alignment	$0	11/18/2016	11/29/2016
1465	1.12.2.2.3.	Laser Transport System Installation Complete	$0	11/29/2016	11/29/2016
1466	**1.12.2.2.3.**	**Laser Transport Installation**	**$0**	**7/12/2016**	**12/14/2016**
1467	1.12.2.2.3.	Laser Transport Components Available for Installation	$0	10/7/2016	10/7/2016
1468	1.12.2.2.3.	Pre-survey	$0	7/12/2016	7/19/2016
1469	1.12.2.2.3.	Install Laser Transport	$0	10/7/2016	12/7/2016
1470	1.12.2.2.3.	Final Survey	$0	12/7/2016	12/14/2016
1471	1.12.2.2.3.	Laser Transport Installation Complete	$0	12/14/2016	12/14/2016
1472	**1.12.2.2.3.**	**Pulse Picker Installation**	**$0**	**7/19/2016**	**12/6/2016**
1473	1.12.2.2.3.	Pulse Picker Procurements Available for Installation	$0	9/29/2016	9/29/2016
1474	1.12.2.2.3.	Pre-survey	$0	7/19/2016	7/26/2016
1475	1.12.2.2.3.	Install Pulse Picker	$0	9/30/2016	11/29/2016
1476	1.12.2.2.3.	Final Survey	$0	11/30/2016	12/6/2016
1477	1.12.2.2.3.	Pulse Picker Installation Complete	$0	12/6/2016	12/6/2016

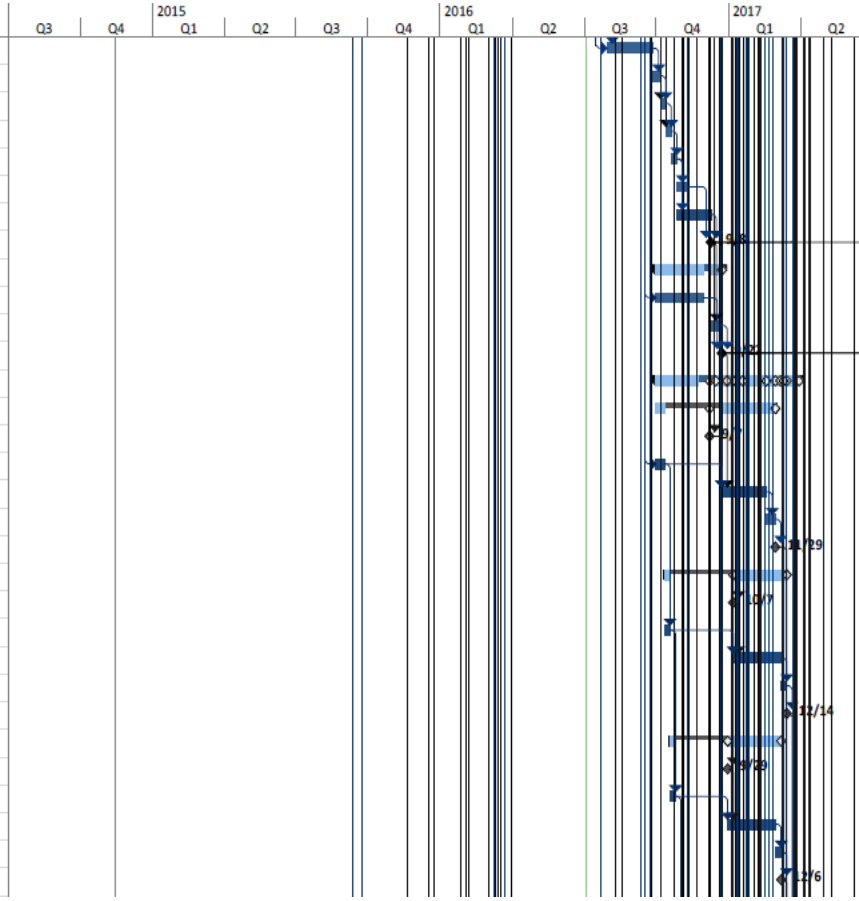

2016 Hardware commissioning and 2017 beam tests

Gun systems

- 500kV DC gun
- Laser
- Cathodes

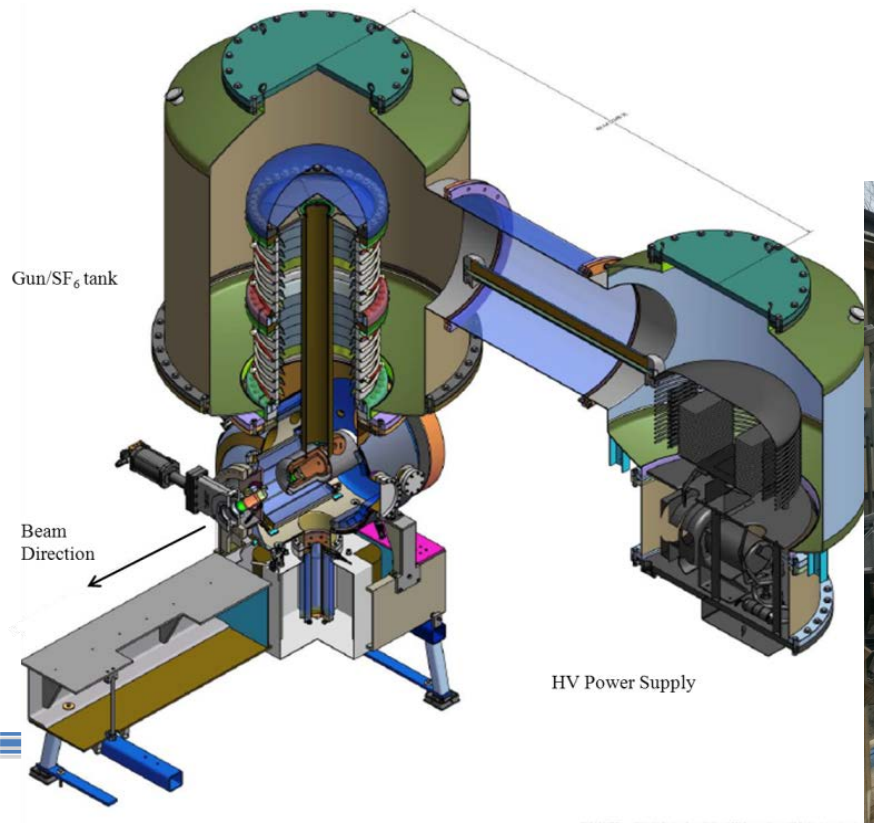

LEReC Laser System

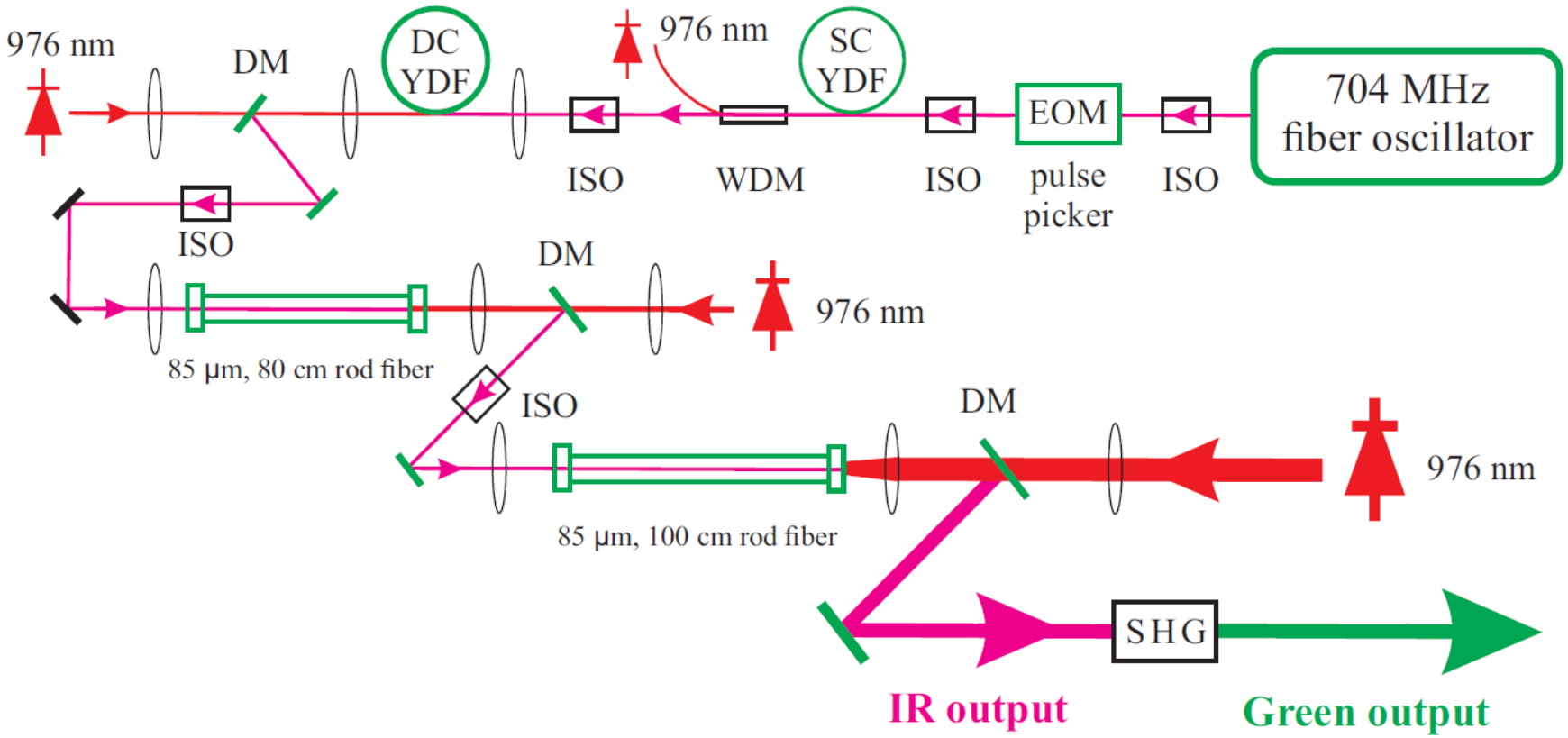

DC Gun Hardware commissioning and tests: 2016-17

- DC gun under contract with Cornell
  - HV test at Cornell
  - Expect delivery to BNL summer of 2016

- Plan to install in IR2 after delivery for:
  1. HV re-conditioning
  2. Cathode mechanism commissioning
  3. Laser commissioning
  3. Beam test into Faraday cup and to 10 kW dump

- DC gun commissioning with beam
  -end of 2016 shutdown? (if schedule can be accelerated)
  -during RHIC Run-17 (most likely)

Previous DC gun @Cornell

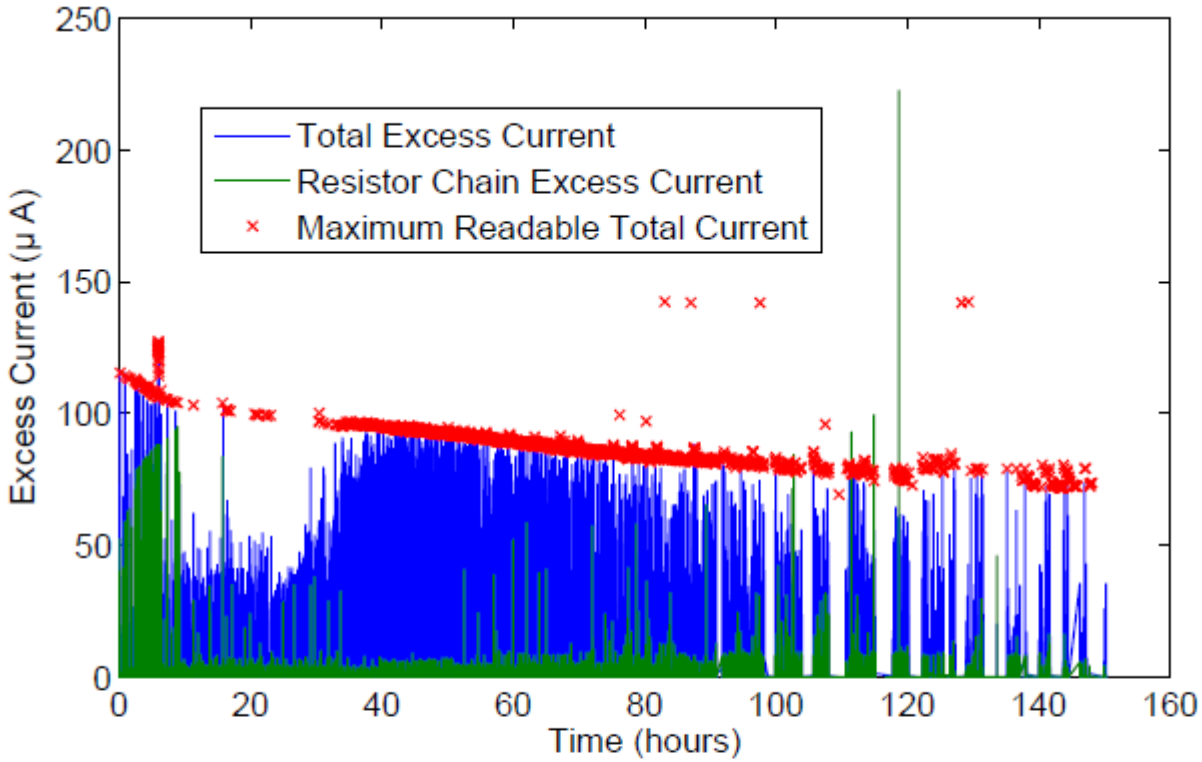

Figure 2.4: The total excess current as measured by a floating ammeter at HV (blue), and the excess current as measured by an ammeter on the resistor chain. The excess current is defined as the total current drawn minus the expected current from the insulator resistor chain. The floating ammeter saturates at a total current of ~ 150 μA, and a red x denotes a point where the ammeter was saturated and the max value of excess current that could be read at that point.

@Cornell

- B.D.: “have a floating ammeter on top of the HV power supply, powered by a diode over fiber, with a fiber xmiter/receiver. We normally only use this for processing, so we can measure sub-microamp levels. I suppose it could be used for 40 mA by changing the resistor, but you would lose resolution.”

- DC Gun system has special

Controls, including infrared diode laser and photocell to power the floating ammeter.

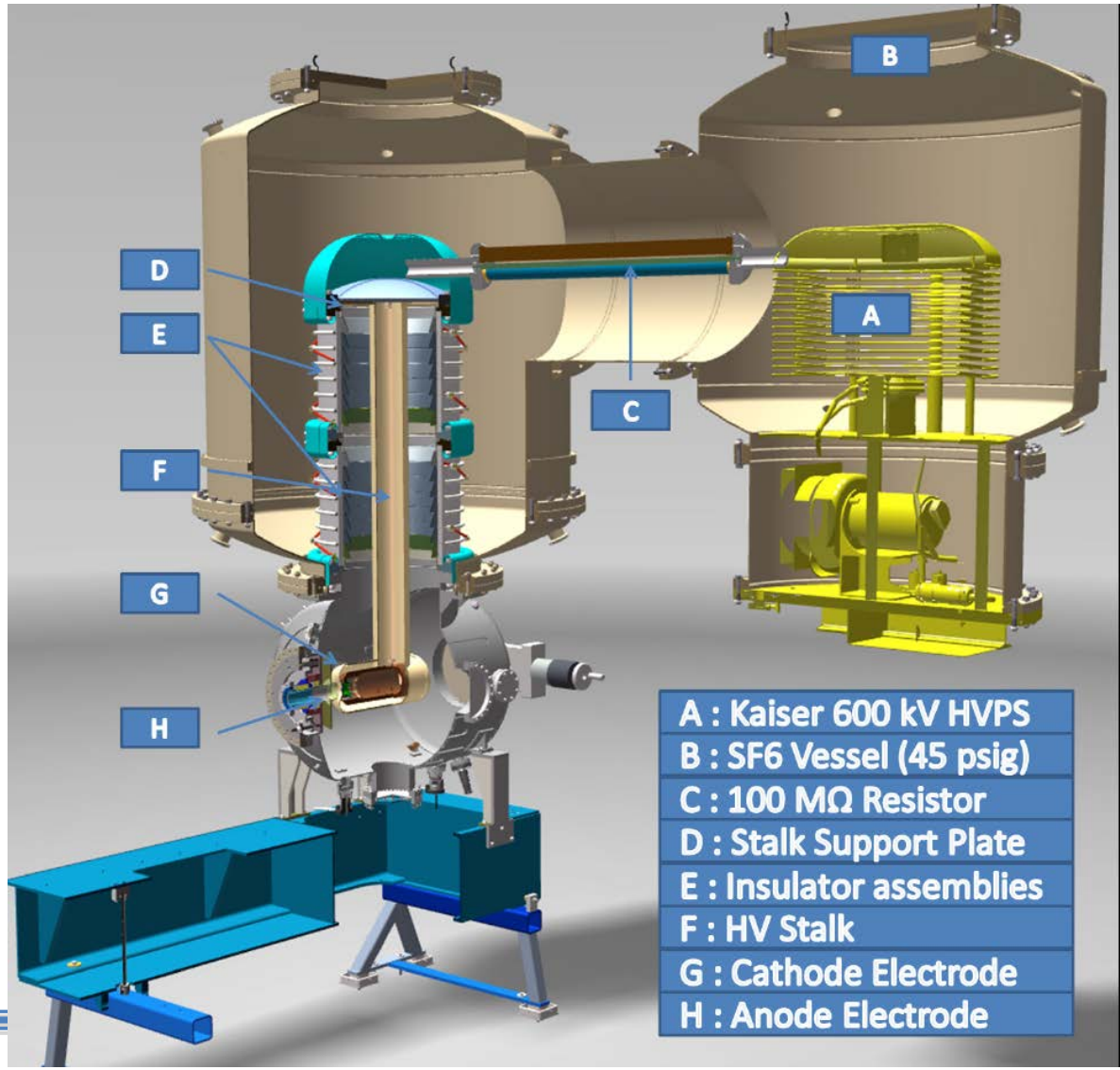

LEReC RF systems

There are five RF systems in LEReC (red – planning to start RF cavities hardware commissioning in 2016)

- ***704 MHz SRF Gun from ERL*** will be converted to serve as a booster cavity, providing up to 2 MeV energy boost
  - P=65kW (two amplifiers)

- ***9 MHz Warm Cavity*** operating at a voltage up to 3 kV.
  for transient beam loading correction is a repurposed spare system from RHIC.

- ***704 MHz Warm Cavity*** operating at a voltage up to 430 kV.
  - Energy spread correction – new design.
  - P=50 kW CW RF amplifier

- ***2.1 GHz warm cavity*** designed to operate up to 250 kV.
  - Correction of the RF curvature energy spread – new design.
  - P=14 kW CW solid state RF amplifier.

2016

- ***704 MHz Warm RF Deflector Cavity*** voltage up to 70 kV (P=250W)
  - In Diagnostics beamline

2016-2017 tests and commissioning

DC Gun tests (2016-2017)

1. DC gun conditioning during RHIC 2016 shutdown
2. Laser Tests
3. With beam: starting with low power for gun and laser commissioning with potential to go to higher power (maximum 500kV, 20 mA, maximum 10kW).

Plus:

- Start commissioning of LEReC warm RF systems

Systems that need to be protected

- DC gun (its own system of controls?)
- SRF Booster Cavity
- ALL warm RF Cavities
- Beam pipe in bending magnets (i.e., e-beam has enough energy density to burn a hole in the pipe)
- Vacuum interlocks
- Beam Dumps (low and high-power)
- Beam Instrumentation which could be inserted, YAG screens
- RHIC

From previous meetings

- How fast we have to shut off the beam?

50micro sec.

- Beam shut off will be done using a shutter at the source. A redundant shutoff will be given to the RF system, which will also prevent any dark current electrons from going to higher energy.

- How do we ensure Laser/shutter is turned off reliably?
- BLMs will be used to provide such fast response time?

LEReC modes for MPS

Needed in 2016

Needed by 2018

	"0" Amps	1Hz, 1 uA	9MHz, 1mA	9MHz, 10mA (10bunch/ train)	Bunch trains 9MHz (704MHz bunches) 250 usec	Full current, 30-70mA
DC gun condition	x					
Laser alignment	x					
RF systems condition	x					
DC gun test with beam	x	x	x	x	x	
Instrumentation	x	x				
Diagnostic RF line	x	x			x	
Operation	x	x	x	x	x	x

Laser Pulse Pattern for LEReC

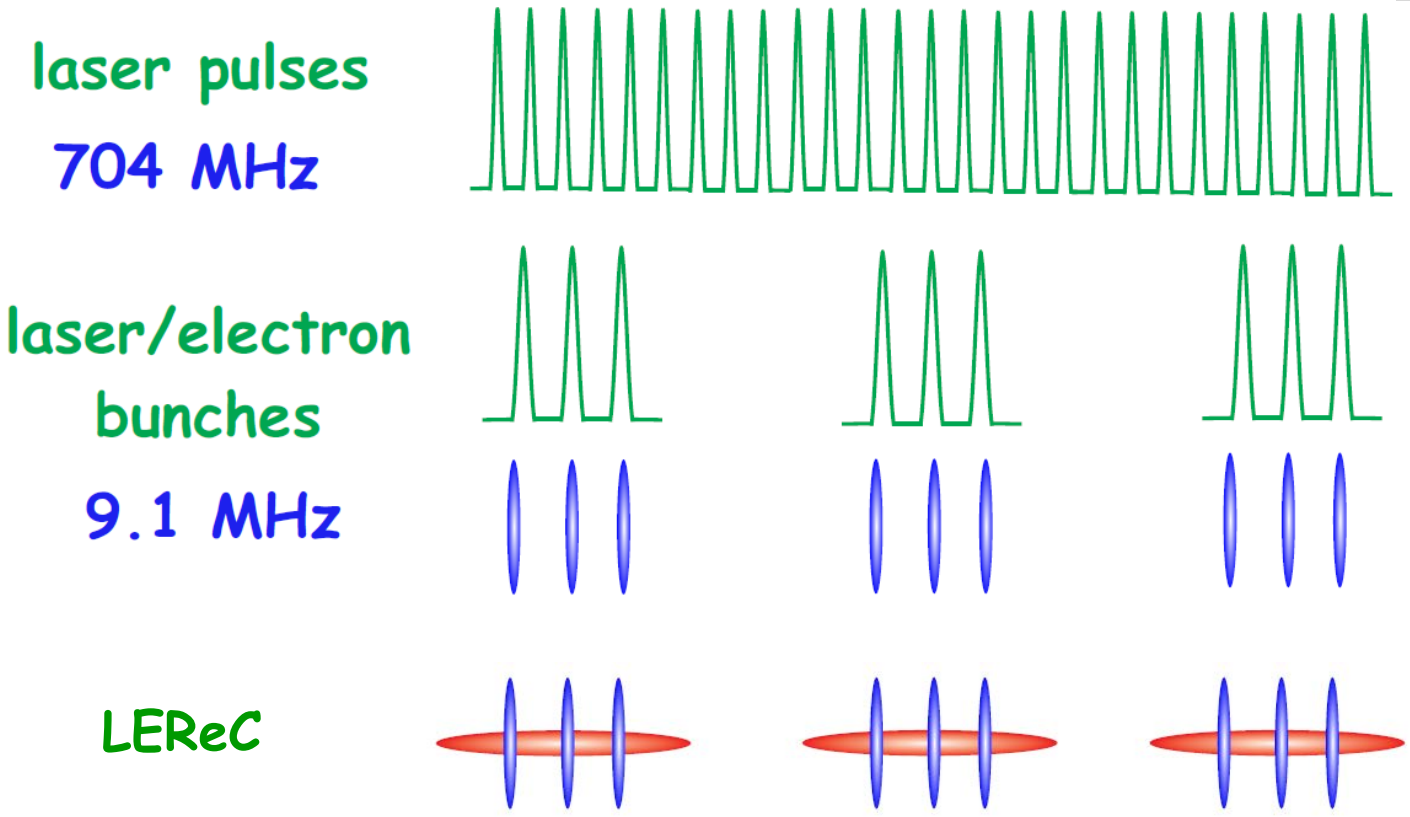

Laser pattern: 704 MHz, 9.1 MHz bunch rate, 10-30/bunch

Laser Energy & Power for LEReC

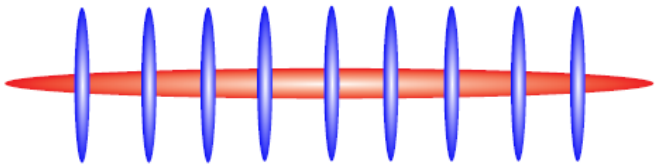

• **Electron bunch charge:**	130 pC	300 pC
• **Laser energy (QE=1%):**	31 nJ	72 nJ
• **Repetition rate (MHz):**	9.1 x30 = 273	9.1x18 = 164
• **Green power on cathode:**	8.5 W	12 W
• **Green power from laser:**	8.5x3 =25.5 W	12x3=36 W

A higher laser power capability, a factor of 2-3, would be needed to achieve stable and reliable operation for beam experiment!

Laser time structure?

- Need laser mode to send pulse trains with 1Hz?

(single macrobunch)

- What limits laser power?

- Inputs to MPS include
  - Enable signals from e.g. timing
  - Disable signals from instruments

- MPS will shut-off laser and RF to protect machine

Are we implementing DLPC?

- Drive Laser Pulse Controller (DLPC) - Integrated Controls Hardware that defines the time structure of electron beam pulses.
  - Micropulse Frequency – Electron bunch rep-rate (75 MHz – 512 kHz)
  - Macropulse Structure – Pulse width and frequency micropulse
- Limited average current as defined by the Machine Protection System (MPS)
- Remote interface via EPICS control system

Slide courtesy Daniel Sexton

DLPC Overview

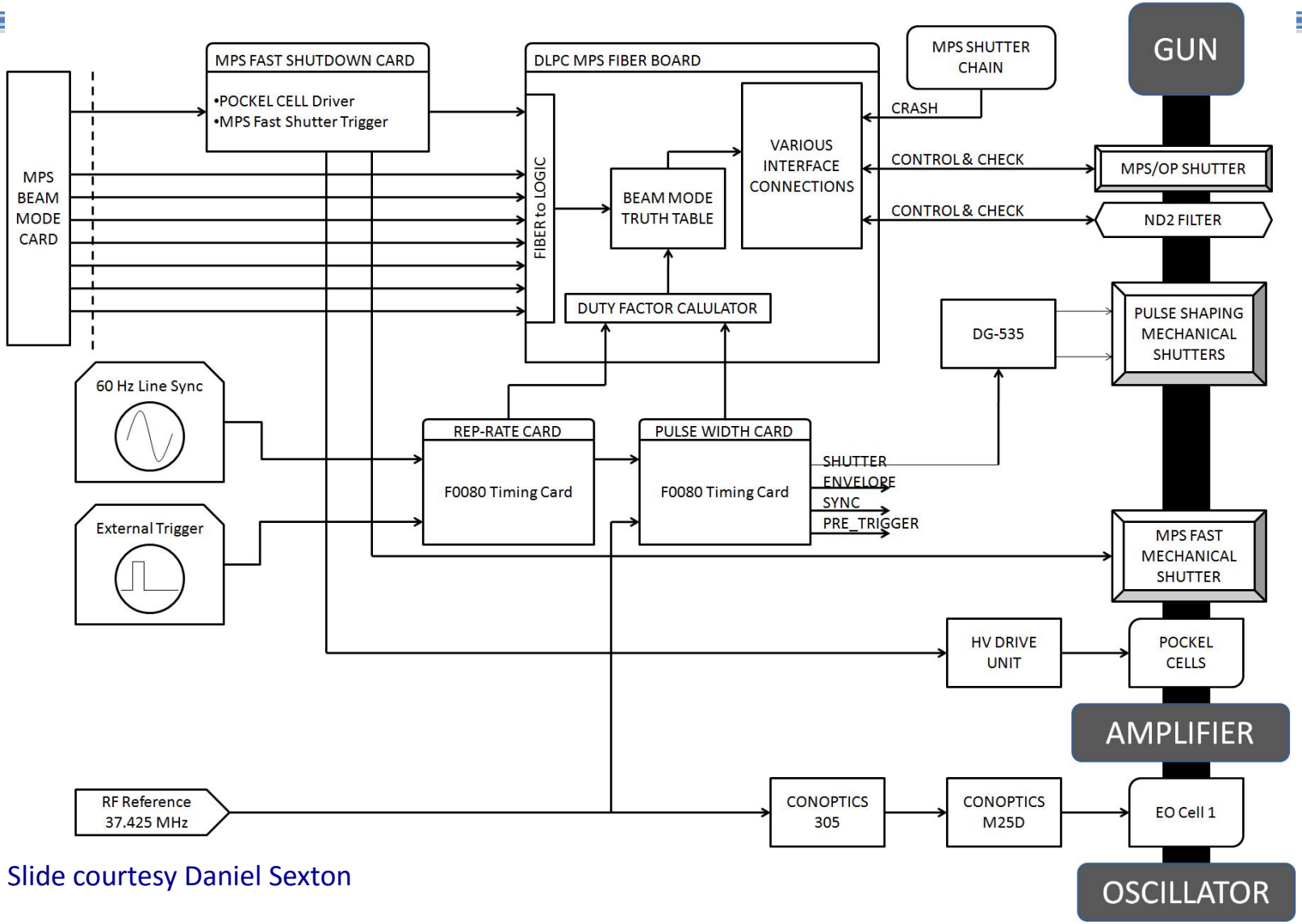

Slide courtesy Daniel Sexton

Bunch Patterns compatible with ICT

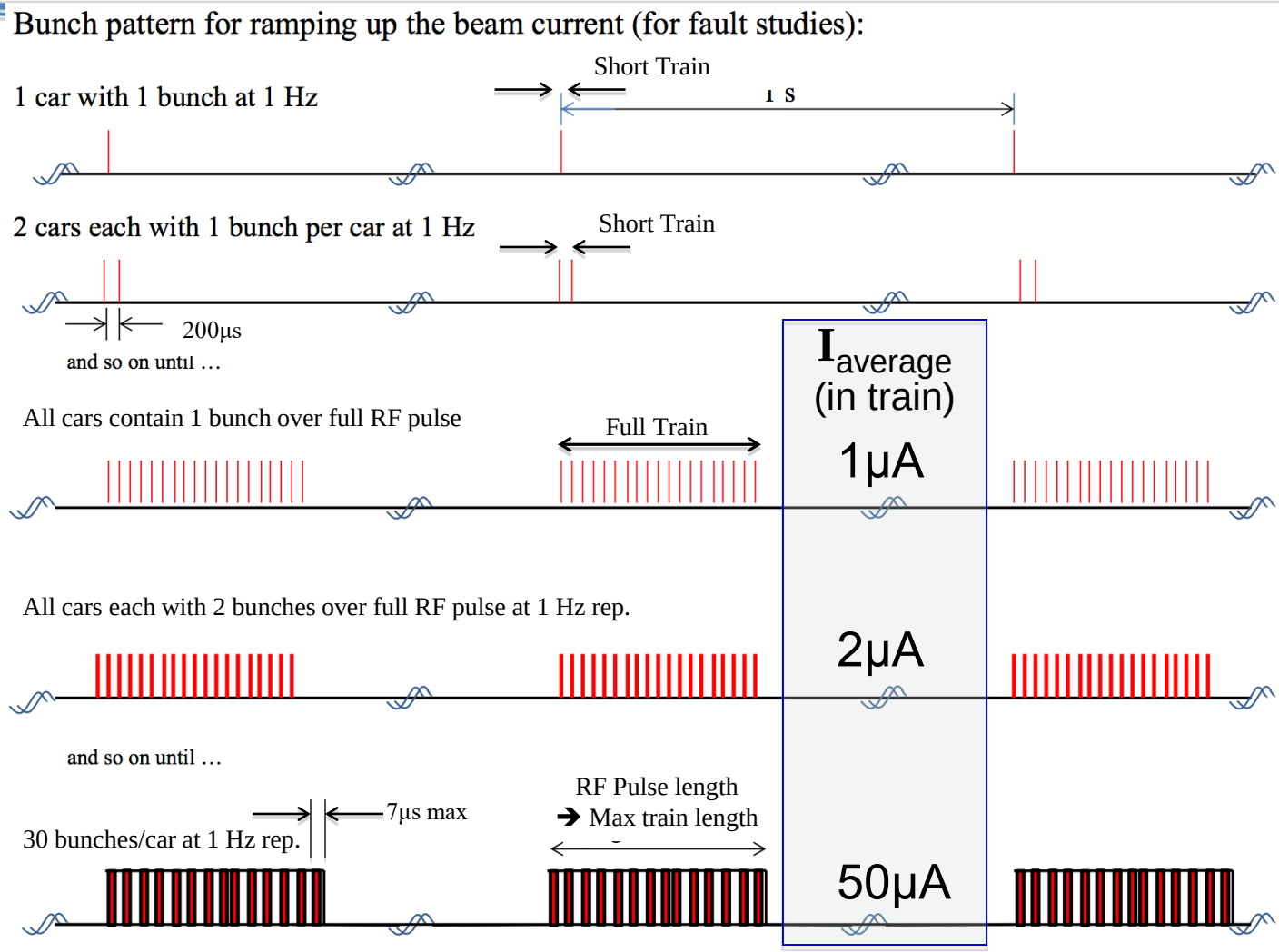

- 100pC/bunch
- 5kHz rep.
- 1 – 30 bunches per car
- **ICT**
  - Charge/car
  - 7µs max car length

Mode 1: DC Gun Test

2.1 GHz and 704 MHz RF Permit

- Defined by RF group
- PASS
- RF Circulator Arc Detector
- Vacuum Status
- Water Status (includes “magic H”)
- Water Temperature

DC Gun Permit

- Provided by DC Gun controls

Laser (Pockel Cell & Shutter)

- NOT allowed

704 MHz SRF Permit

- Cryo Status
- FPC Arc Detector (air side)
- FPC Arc Detector (vacuum side)
- PASS
- Vacuum Status
- Water Flow (FPC)
- Water Status

Mode 2: laser test

DC Gun Permit

- NOT ALLOWED

Laser (Pockel Cell & Shutter)

- DC Gun Status
- 704 MHz SRF Status
- 2.1 MHz RF Status
- 704 MHz RF Status
- BPMs
- Emittance slits
- Profile Monitors
- ICT Diff. - Beam Transmission
- Beam Dump Water Flow
- Beam Dump Temperature
- Valves
- Last Quad PS Current
- F Dipole PS Current
- ??????????????????????????

2.1 GHz and 704 MHz RF Permit

- Defined by RF group
- PASS
- RF Circulator Arc Detector
- Vacuum Status
- Water Status (includes “magic H”)
- Water Temperature

704 MHz SRF Permit

- Cryo Status
- FPC Arc Detector (air side)
- FPC Arc Detector (vacuum side)
- PASS
- Vacuum Status
- Water Flow (FPC)
- Water Status

X = Don't care

Mode 3: RF Test

704 MHz SRF Permit

- Defined by RF group
- Cryo Status
- FPC Air Flow
- PASS
- Vacuum Status
- Water Flow (dummy load)

X Emittance Monitors
X Profile Monitors
X Beam Dump Water Flow
X Beam Dump Temperature
X Valves
X ….

2.1 GHz RF Permit

- Defined by RF group
- PASS
- RF Circulator Arc Detector
- RF Window
- Vacuum Status
- Water Status (includes "magic H")
- Water Temperature

704 MHz warm RF Permit

- Defined by RF group
- PASS
- Vacuum Status
- Water Flow (FPC)
- Water Status

Laser (Pockel Cell & Shutter)

- NOT ALLOWED

X = Don't care

Mode 4: Beam to Low Power Dump

DC Gun Permit

- DC Gun Status
- etc

2.1 GHz RF Permit

- PASS

Laser (Pockel Cell & Shutter)

704 MHz SRF Permit (2018)

- Cryo Status
- FPC Arc Detector (air side)
- FPC Arc Detector (vacuum side)
- PASS
- Vacuum Status
- Water Flow (FPC)
- Water Status

X = Don't care

Mode 5: Instrumentation (low-power)

DC Gun Permit

- DC Gun Status
- etc

2.1 GHz and all other warm RF Permit

- PASS

Laser (Pockel Cell & Shutter)

704 MHz SRF Permit (2018)

- Cryo Status
- FPC Arc Detector (air side)
- FPC Arc Detector (vacuum side)
- PASS
- Vacuum Status
- Water Flow (FPC)
- Water Status

X = Don't care

Mode 6: Beam to Diagnostics RF beam line

DC Gun Permit

- PASS

2.1 GHz, 9MHz. 704MHz and 704MHz Deflector RF Permit

- PASS
- RF

Laser (Pockel Cell & Shutter)

704 MHz SRF Permit

- Cryo Status
- FPC Arc Detector (air side)
- FPC Arc Detector (vacuum side)
- PASS
- Vacuum Status
- Water Flow (FPC)
- Water Status

X = Don't care

Mode 7: Beam to RHIC (operating)

DC GUN Permit

ALL warm MHz RF Permit

- PASS
- Etc.

Laser (Pockel Cell & Shutter)

704 MHz SRF Permit

- Cryo Status
- FPC Arc Detector (air side)
- FPC Arc Detector (vacuum side)
- PASS
- Vacuum Status
- Water Flow (FPC)
- Water Status