LEReC INSTRUMENTATION DEVELOPMENT

1-21-16

T MILLER

Topics

- Gun Instrumentation
  - Cathode imaging mirror
    - Insertion limit vs. mirror angle
    - Lack of steering adjustment
  - Profile monitor, screen size
  - 15mm BPM Button pick-ups
  - Ion Clearing
  - What instruments to install downstream?
    - BPMs for time of flight energy measurement
  - Laser offset on cathode
  - Size of laser mirrors

- Wire scanner update
  - Is this necessary at all?
  - Where to install?
  - compare to Rastered Beam Wire Profiler.

Machine Layout

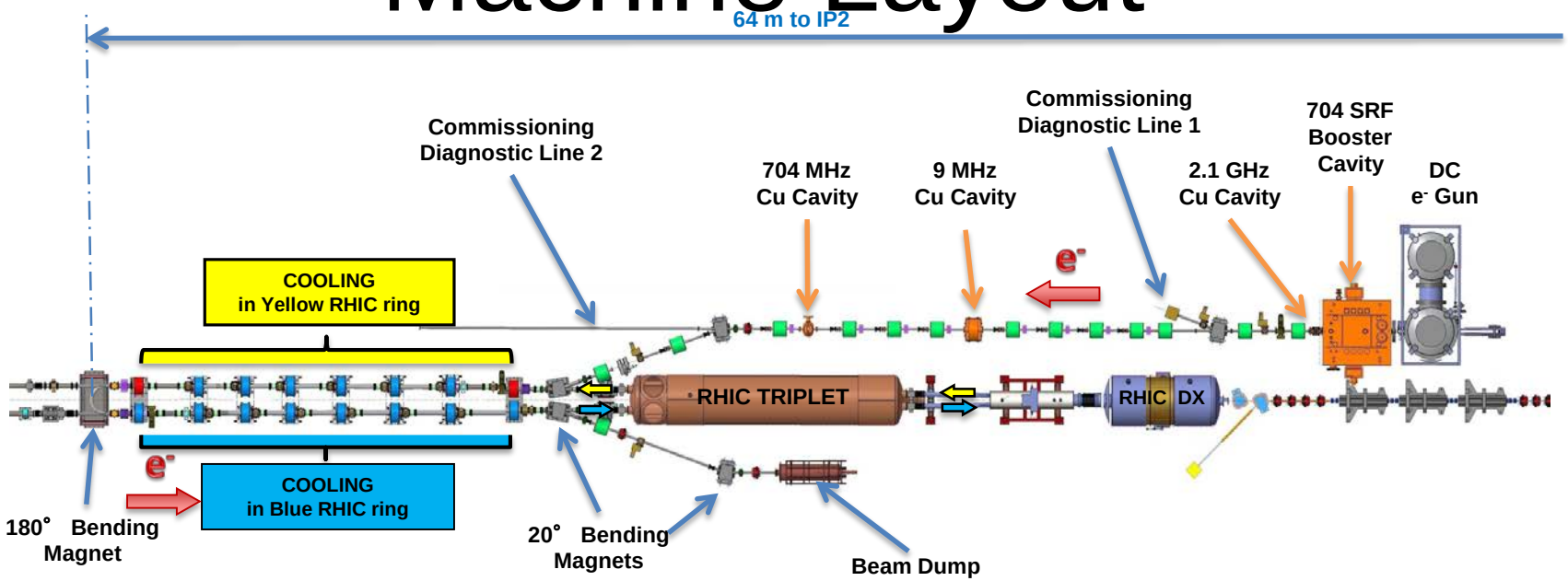

Symbolic Layout of Instrumentation

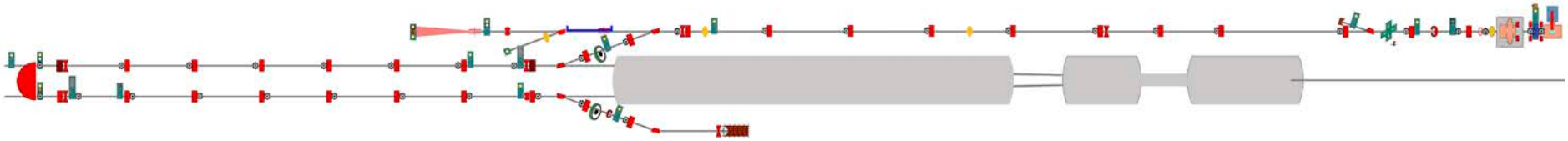

Cathode Inspeciton

- Plungeable Inspection mirror:
  - Incomplete insertion depth incompatible with perfect 45 deg angle for on axis viewing
  - Lack of angle adj. is risky

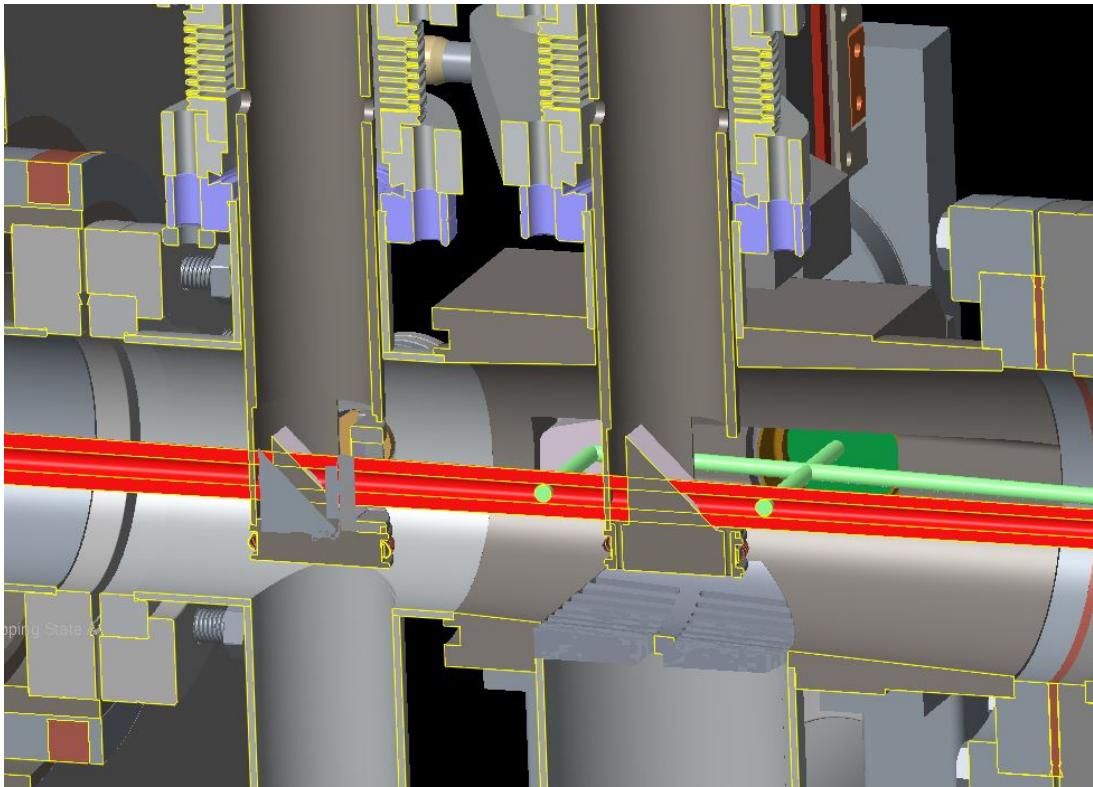

Gun Profile Monitor

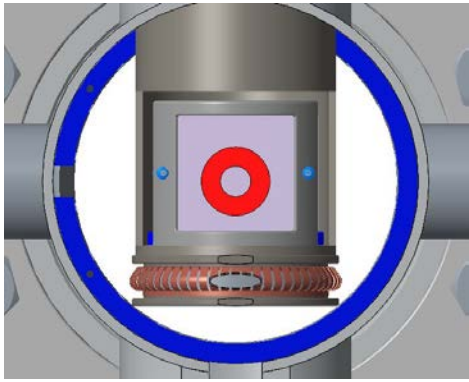

- Profile monitor (insertable YAG)
  - 19x19mm
- Cathode Imaging
  - insertable mirror
  - Back-up on-axis imaging via laser port

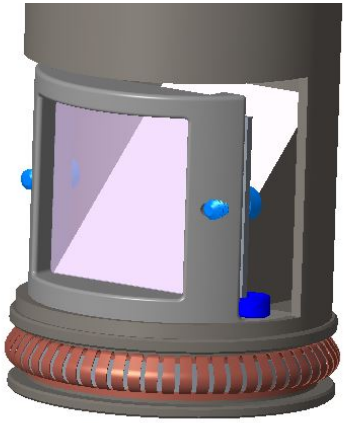

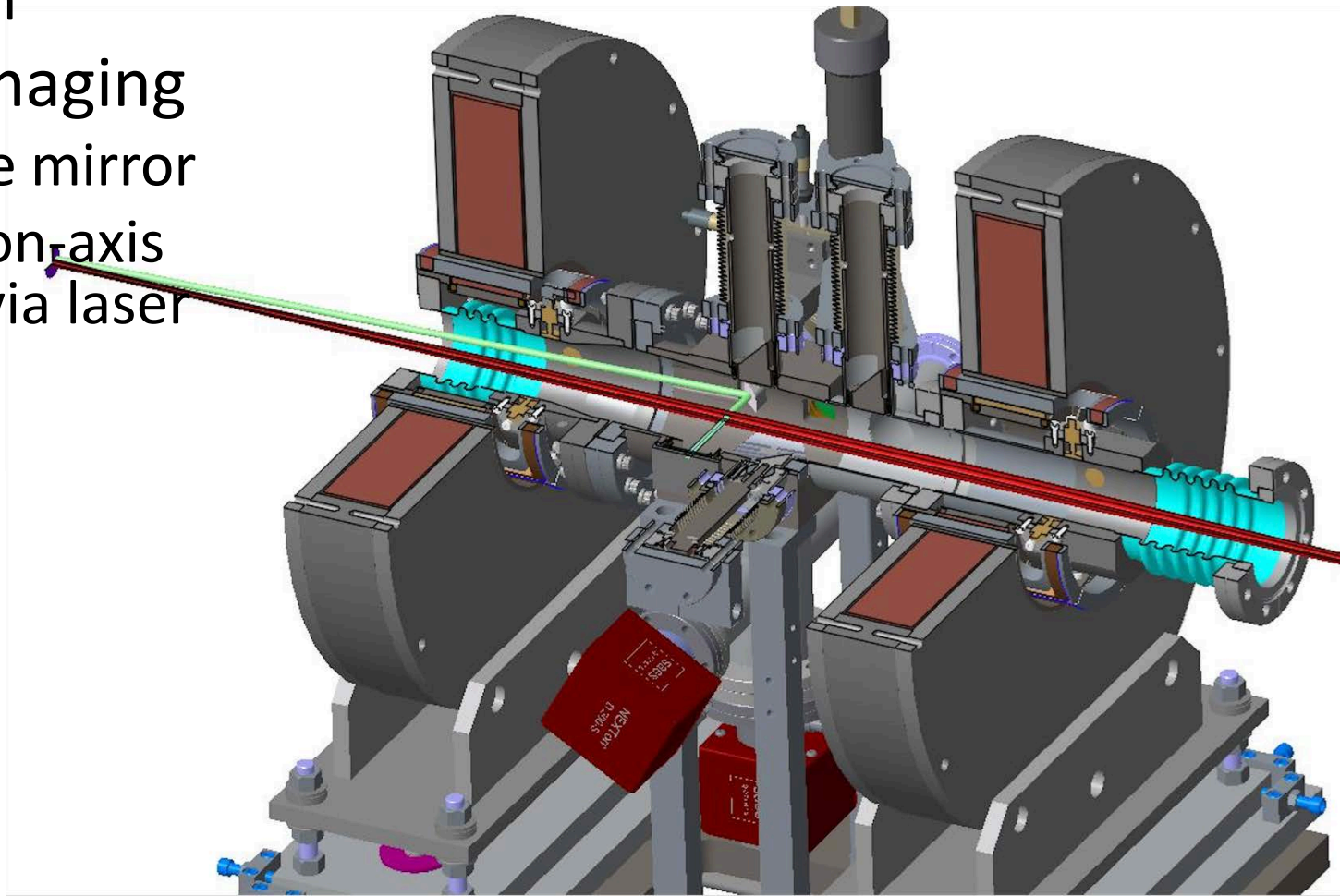

DC Gun (outdated image)

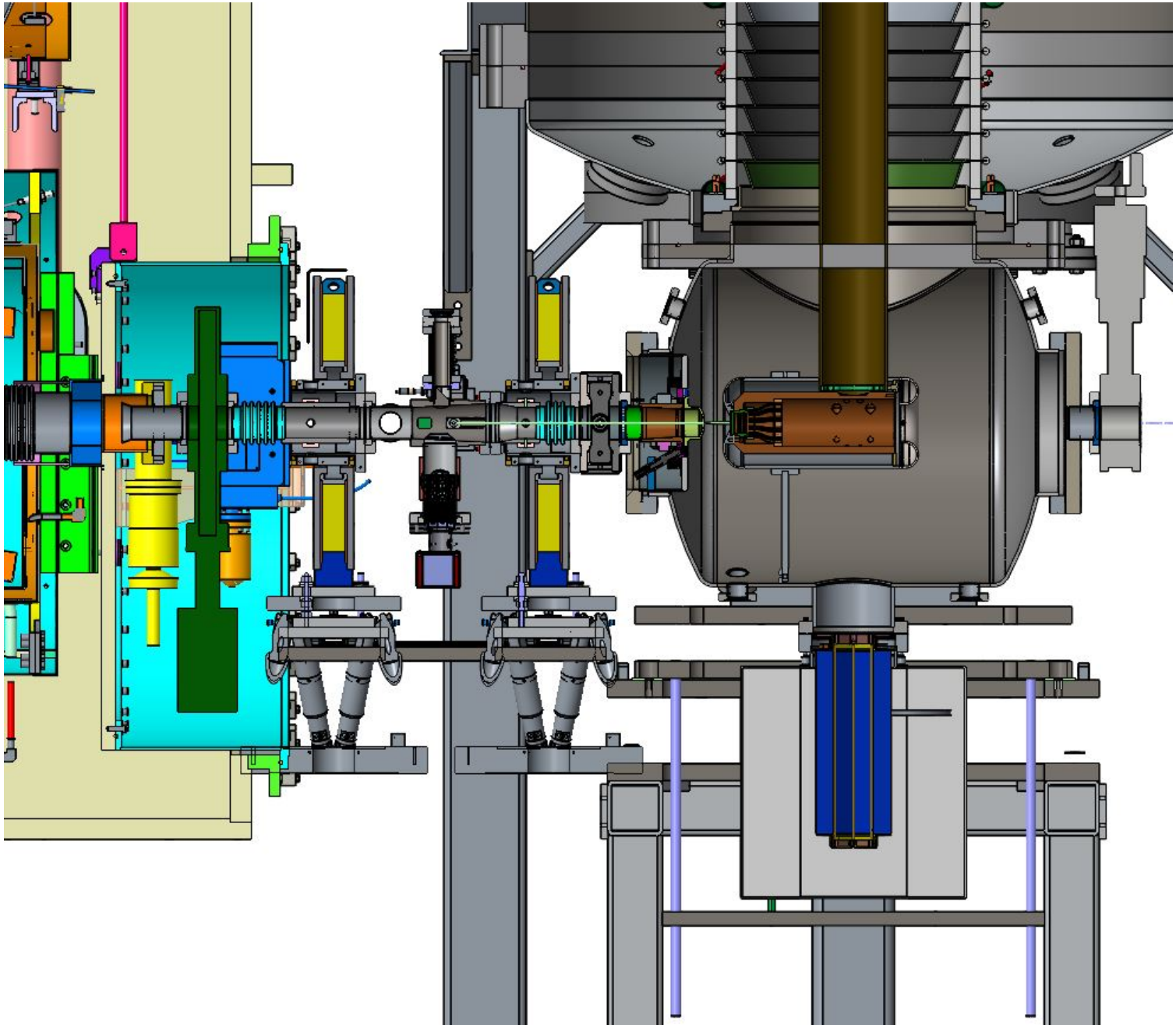

Ion Clearing

- Use of BPM buttons
- Installation of long thin HV wires
- Pulsed vs DC high voltage bias

BPM Pick-Ups

- 15mm buttons vs. striplines
- 2 extra pick-ups for phase measurements

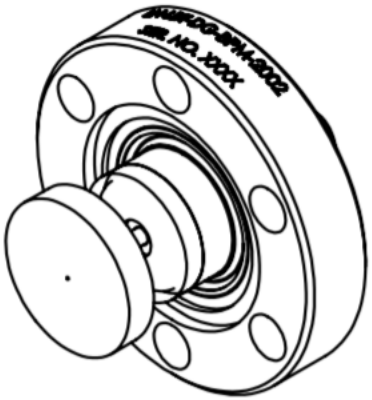

MPF, Q8425-2

Gun Commissioning Instrumentation

- YAG profile monitor
- Cathode imaging mirror
- (2) phase pick-ups
- (2) quad BPM buttons
- Air-side cathode imaging & illumination optics

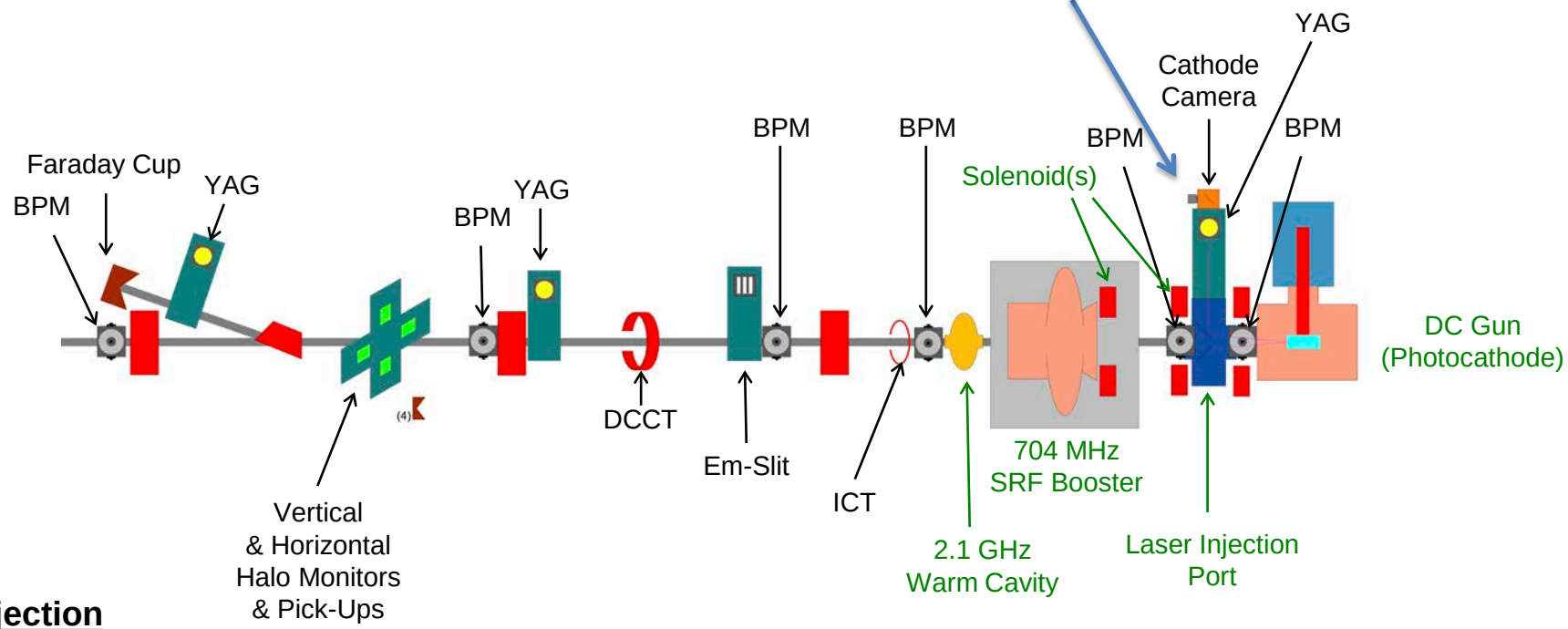

Injection

BPM = 6
YAG = 3
ICT = 1
DCCT = 1
Emittance Slit = 1
Halo Pairs = 2
Faraday Cup (& pick-ups) = 5

High Power Profile Monitor

High Power

•Compact offset cam design
•9 µm carbon fiber @ 20 m/s
•accelerate/coast/decelerate
•PMT detects X-rays generated by the scattered electrons

- **Design Reliability?**
- **Performance Study?**
- **Alternatives?**

- **REQUESTED QUOTE FROM CORNELL**
  - **Meeting with Bruce next week during his visit to BNL**

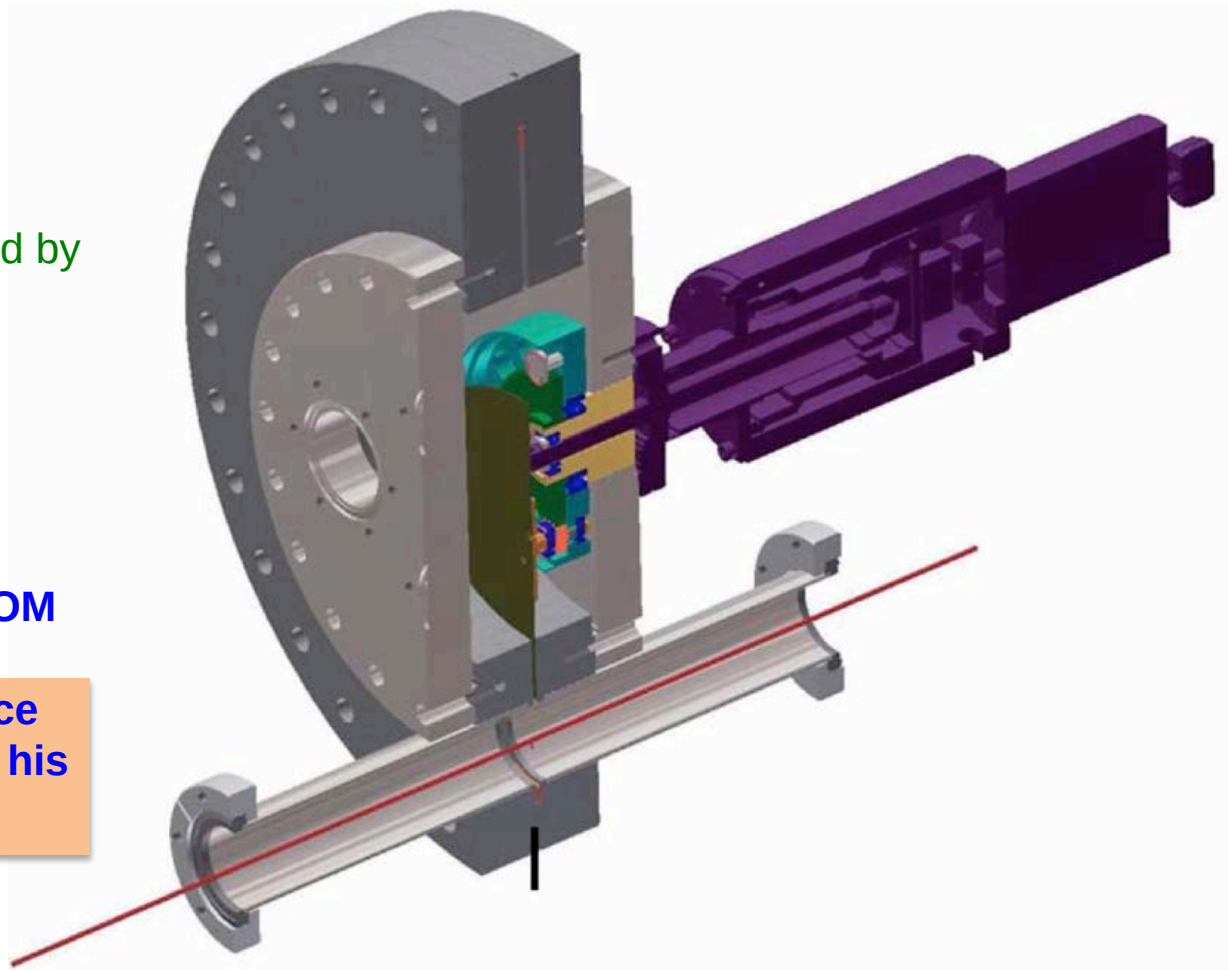

Photo courtesy of B. Dunham, Cornell

Scanned-Beam Profile Monitor

- Carbon Wire -> how to pick up beam signal?
- Harp processing electronics
- PMT secondary pick-up -> E too low for airside PMT
- Requires single sweep of 9MHz beam across filament -> need heating calculation
  - Fast magnetic sweep difficult through beam pipe -> ceramic break with longitudinal conductors proposed
  - Need to calculate max beam scan rate (kicker speed)
- Requested advise from M. Tiefenback
  - Electron absorption vs. secondary emission energy crossover point
    - May require experiment with varying beam energy
  - Wire material: Tungsten-Rhenium, Beryllium, Boron Nitride, carbon, etc.

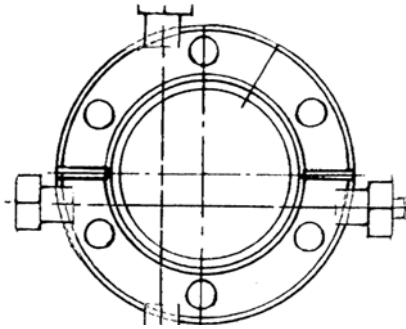

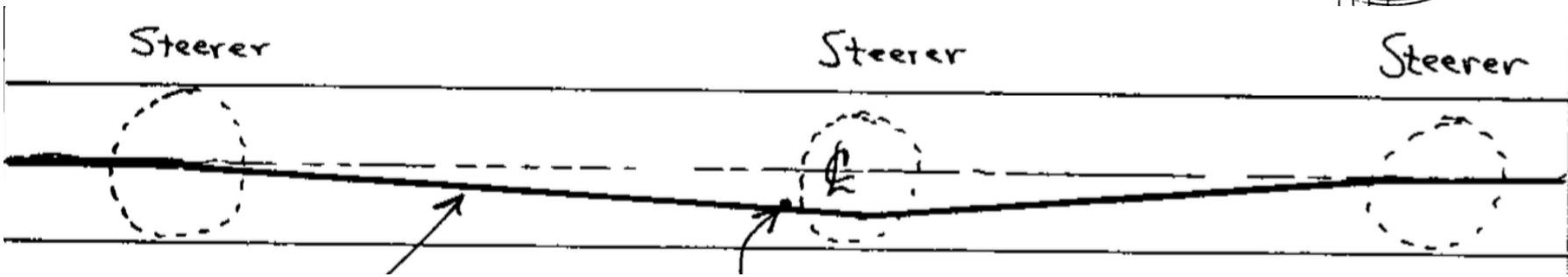

Notes from this meeting (1-21-16)

- Cathode Imaging:
  - We will plan to guarantee that the cathode gets inserted such that the activated spot is always in the same location when inserted; thus avoiding a full scan of the laser across the cathode. According to Bruce, Laser mirrors don't provide full aperture covering the entire cathode. Need to layout optics to confirm..
  - Bruce argued against the insertable cathode mirror as it is rarely used and its BeCu RF seal produces undesirable particulates. Cornell typically uses the laser insertion/extraction ports to peer at the cathode through the laser steering mirrors; although they don't give a full view of the entire cathode surface.
  - We can use a color camera and illuminate with red light to provide a high contrast to the green laser spot on the surface.
  - Degradation of the cathode surface will result in increased specular reflection – directly visible by this camera.
  - A more important camera to have is one looking through a mirror at the back side of the inserted cathode. A fiducial can be made on the rear of the cathode that indicates the orientation of the activation spot for in-situ confirmation.
  - Thus we decided to remove the plunging on-axis cathode inspection mirror
- Gun Profile Monitor
  - Need to check if YAG screen (19x19mm) is large enough to make solenoid scanned emittance measurements using varying beam size on screen.
  - Bruce suggested multiple screen types (Beryllium Oxide, Diamond) for imaging higher beam charges to avoid the low saturation limit of YAG.
- Gun Anode:
  - As anode is biased to ~500V or so, an pA ammeter can be used to monitor cathode condition where increased beam halo from a roughened cathode surface would result in halo depositing current on the anode.
  - The anode bias could be enough to act as an ion clearing electrode but no data to prove yet.
- Ion Clearing
  - We want to avoid adding bias tees to the BPM buttons to combine position measurements with ion clearing.
  - Additional buttons proposed to be added for use as ion clearing electrodes in the gun section
  - Cornell makes their own from feedthroughs and simple flat electrodes.
  - To save space, an 8-button chamber is proposed to provide position measurement, ion clearing, and phase pick-ups for LLRF
  - Bias voltage of only ~100V is required, per Bruce.
  - Cornell built a parallel plate device with matched impedance for ion clearing but was expensive.
  - Tests with ac bias showed optimum frequencies and resonant points where ions were quickly swept away. This was indicated by reduced ion-induced radiation on nearby PMT.
- Gun Commissioning Beam Line
  - Beam line supposed to be roughly 6m long
  - Will need corrector magnets every 1m for operation without booster. Jorg found that our beam will propagate far beyond the length of this beam line.
  - Cornell used BPM time of flight phase measurements to calibrate their Gun HV. Mike asked how they calibrated the time measurent… no response.
  - Dimitry wants to measure pulse to pulse amplitude stability for <5% requirement. Zhi plans to implement a laser pulse monitor to give phase and amplitude noise measurements using PLL at the RF frequency for an amplitude noise measurement of ~1%.
  - Need solenoids every 2m and a high power dump to accommodate high current operation of Gun.
  - Beam line will be planned with all instruments as shown – positions to be redefined.
  - The ICT will only provide total charge measurements for – 10 us samples of pulse trains during commissioning.
  - DCCT & ICT will require aperture transitions.
- Beam Halo
  - Cornell's concern was strictly personnel radiation safety and cathode lifetime. Operation in the RHIC tunnel gives rise to concerns of cathode lifetime and risk of quenching the booster SRF cavity.
  - ERL halo monitors planned to be mounted just downstream of the last solenoid in this line. Should be where beam is largest.
- High Current Profile Measurement
  - Do we really need it:
    - Only mechanism that affects profile from low to high current is suspected to be effects from ion clouds. Thus with ion clearing, do we really need to make the measurement?
    - Other advantage is an online profile measurement – maybe the greater advantage
    - Fast emittance measurements are needed to look for effects of ion clouds since they caue oscillations of the pulse train tail. This may be visible in the raw BPM button signal. Cornell admitted to not having sufficient diagnostics to look for this.
  - Flying wire can do 20m/s across the beam. Current design flaws include: wire breakage & vibration, vacuum upset during operation. Cornell agrees that this R&D project may not be mature enough for us to rely on.
  - Alternative **Rastered Beam Profiler** is now the avenue of choice to pursue.
    - Dump location would not require a perfectly compensated orbit bump.
    - May not fit in the merger section as spacing between kickers is needed to provide a good lever arm for a 20m/s beam traversal over the wire.
    - May have to move the instrument to the end of the transport line before the merger.
    - Instrument can be installed in the quadrupole beam line for testing.

Back-Up Slides

Scope: Transport

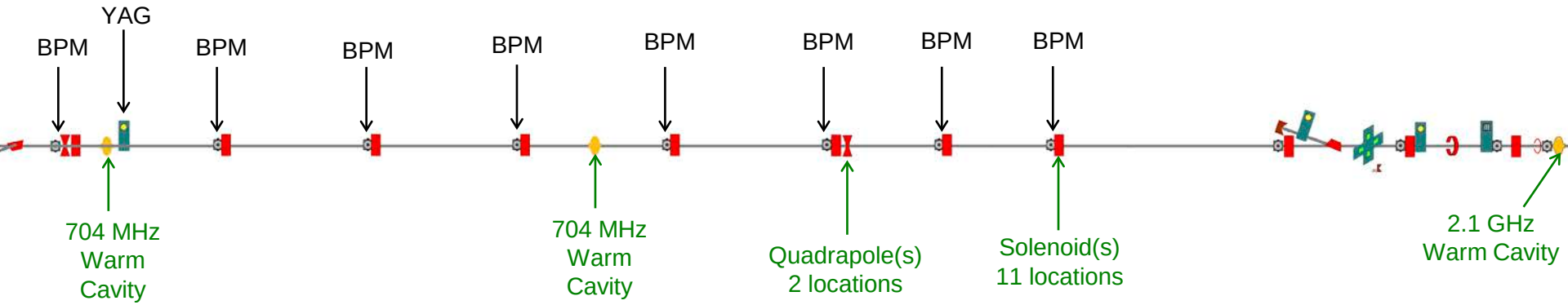

e-Beam Transport

BPM = 8

YAG = 1

Merger Beam Line

Prefer laminated core in 20° dipole for frequent switching to and from diagnostic beam line.

Q/ Is it too late to change the core?

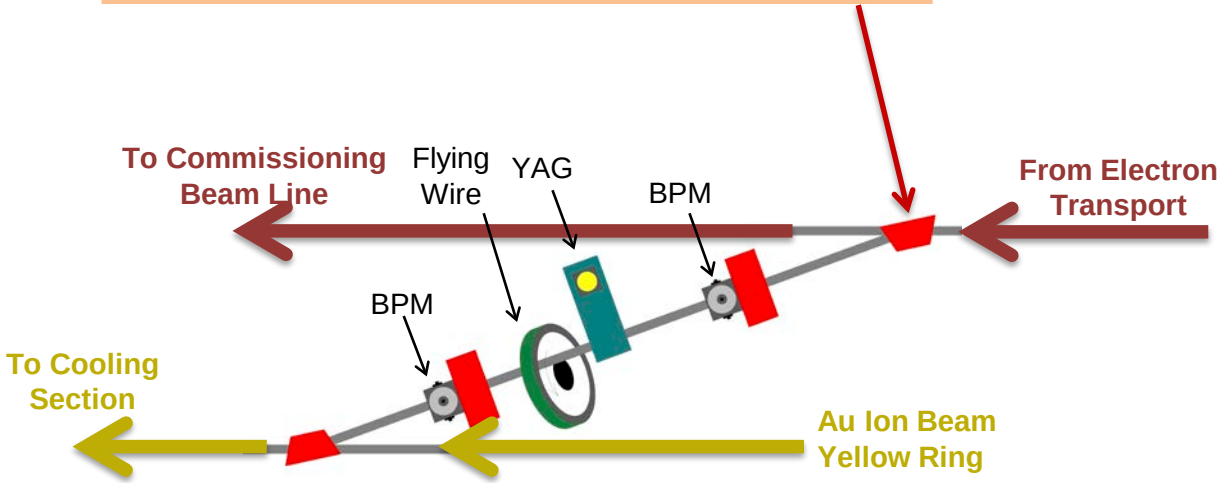

e-Beam Transport

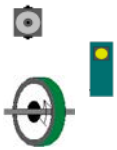

BPM = 2

YAG = 1

Flying Wire = 1

Commissioning Beam Line

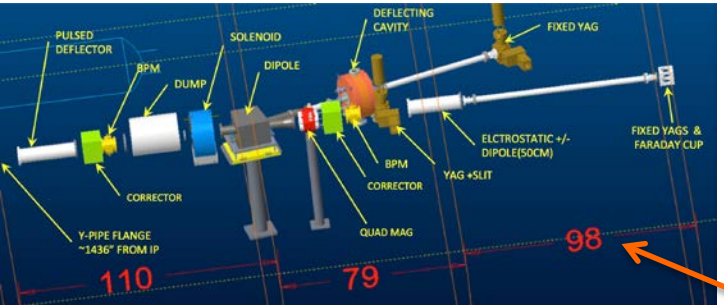

Courtesy J. Hock, 1/6/16

Needs updating

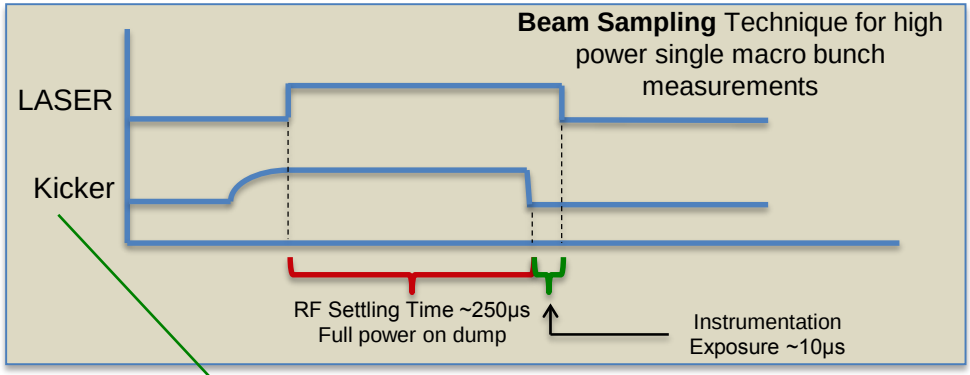

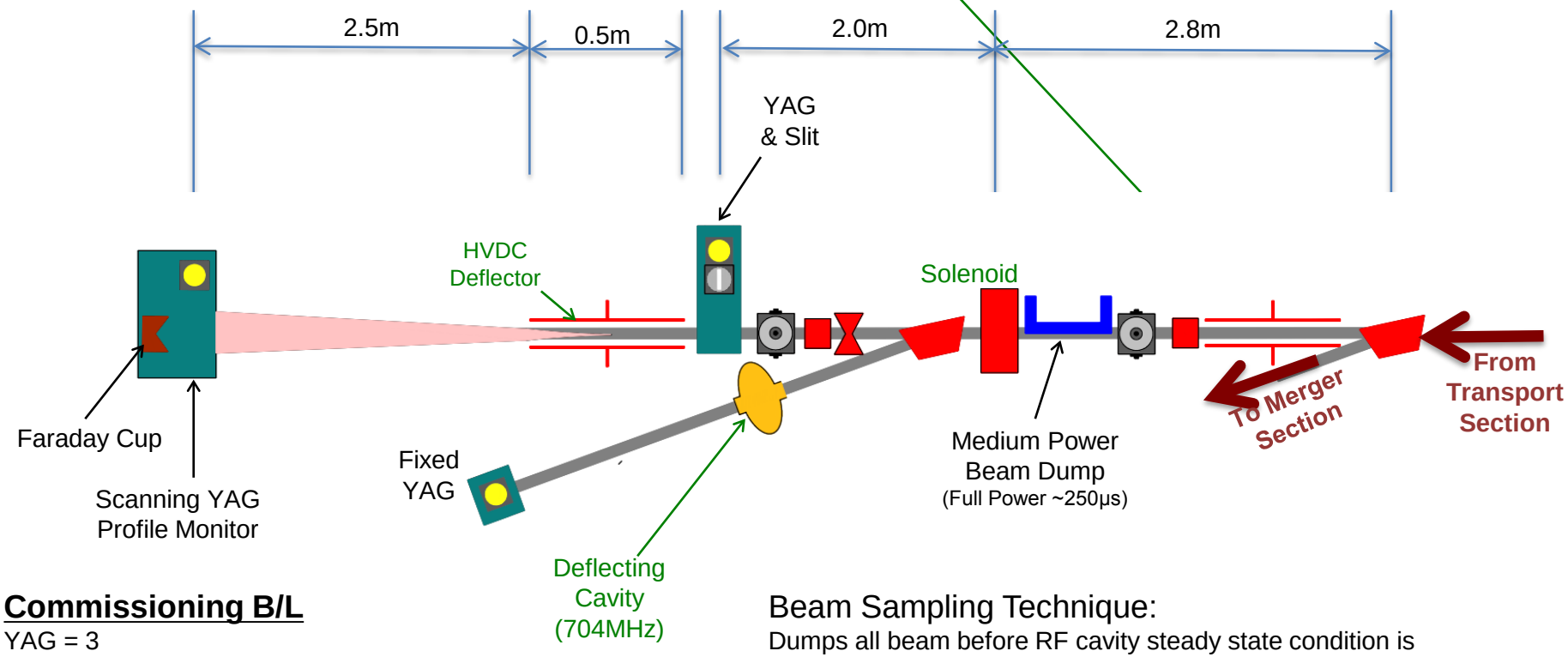

Commissioning B/L

YAG = 3

Faraday Cup = 1

Defining Slit = 1

Beam Sampling Technique:

Dumps all beam before RF cavity steady state condition is reached; thereby providing low average power samples representative of steady state high power beam.

Scope: Cooling Sections

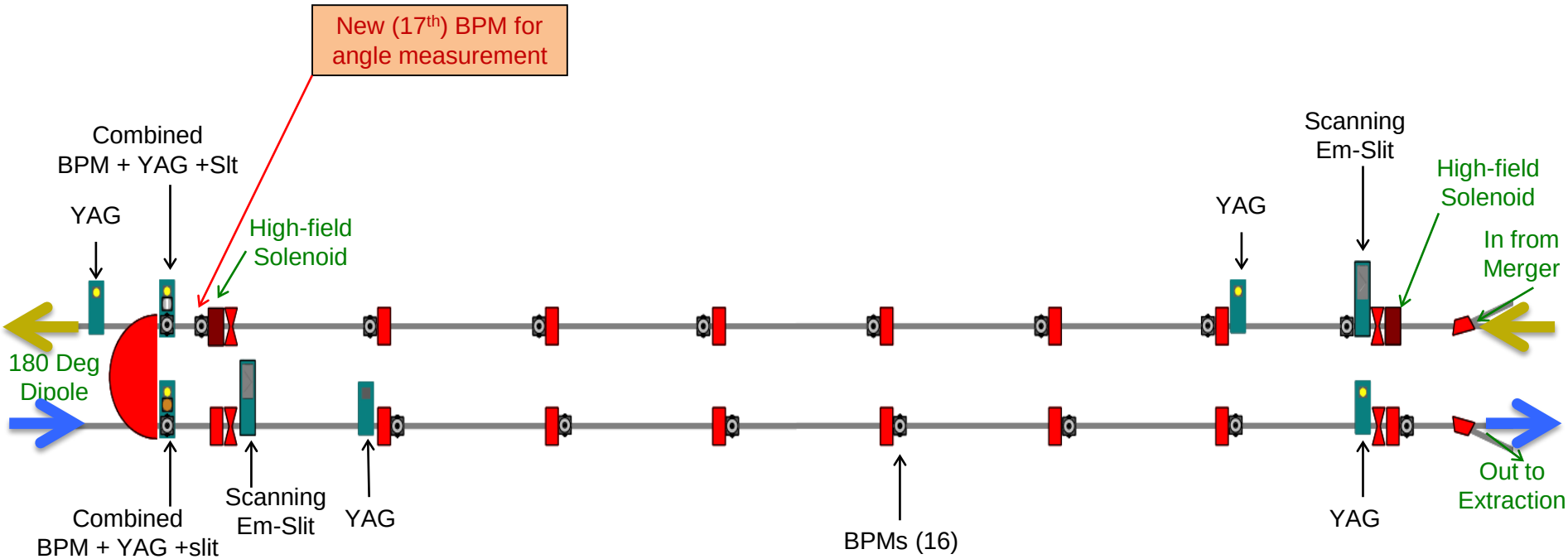

Cooling Sections

BPM = 16

YAG = 6

Scanning Em-Slit = 2

Energy Spread Slit = 1

Scope: Extraction

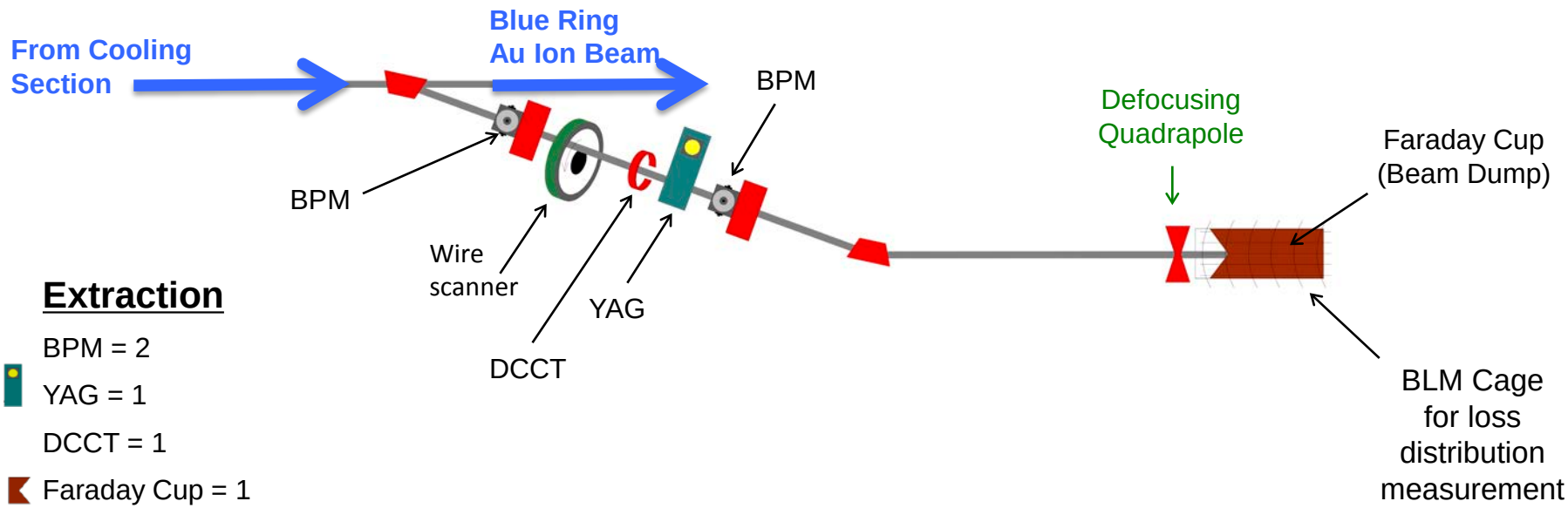

Extraction

BPM = 2

YAG = 1

DCCT = 1

Faraday Cup = 1

Wire scanner = 1

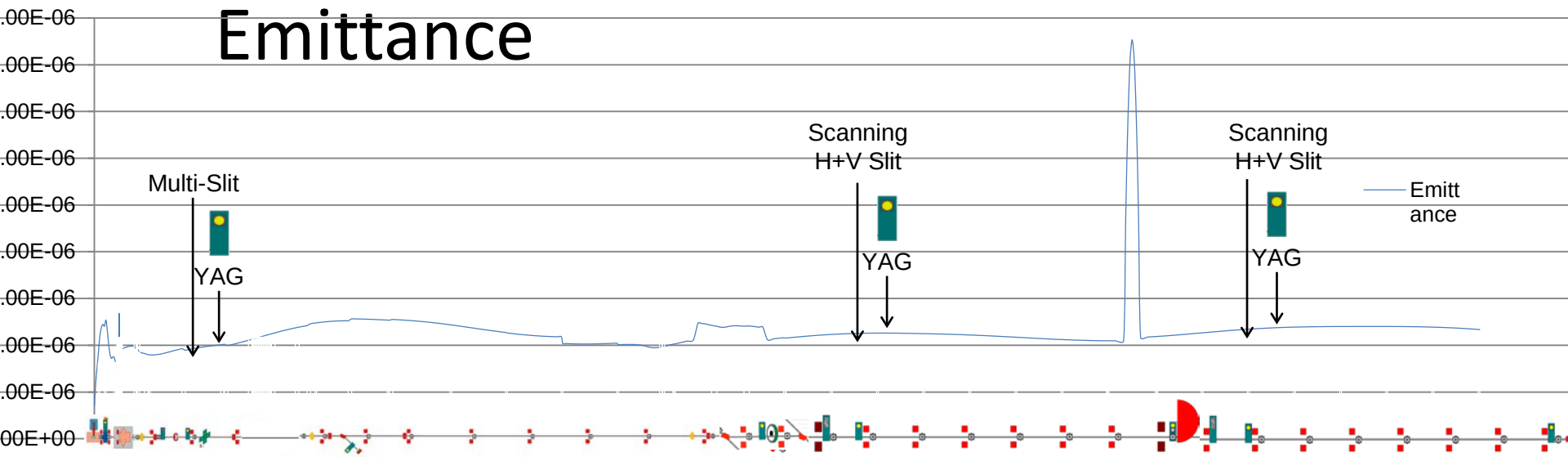
Emittance
Multi-Slit
YAG
Scanning
H+V Slit
YAG
Scanning
H+V Slit
YAG
Emitt
ance

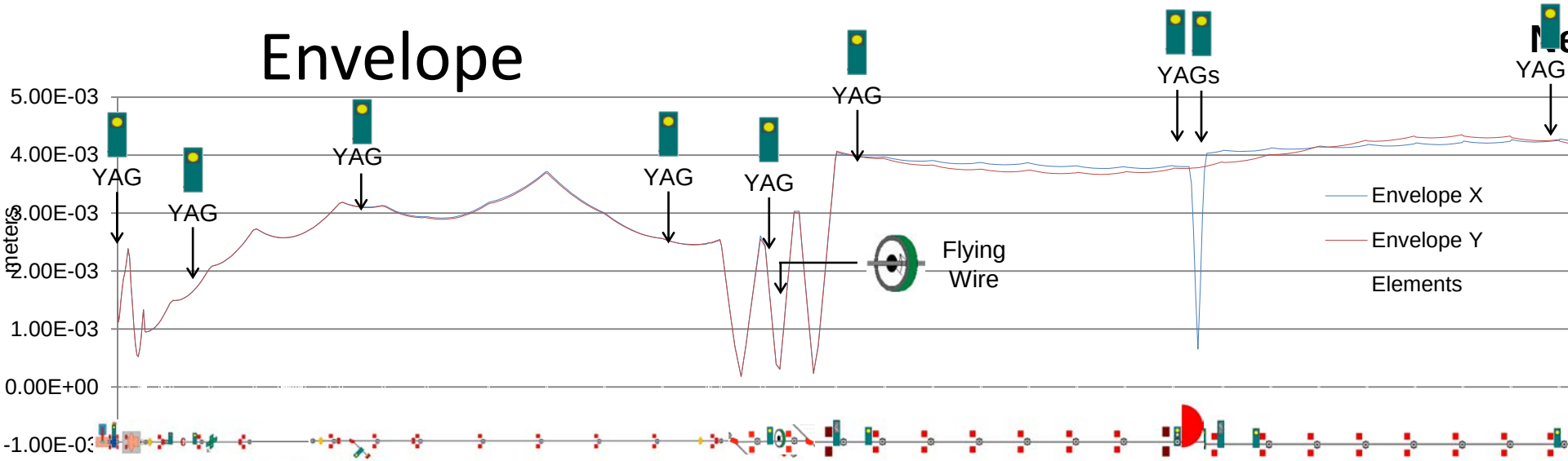
Envelope
5.00E-03
4.00E-03
3.00E-03
2.00E-03
1.00E-03
0.00E+00
-1.00E-03
meters
YAG
YAG
YAG
YAG
YAG
YAG
YAGs
YAG
Flying
Wire
Envelope X
Envelope Y
Elements

Main Beam Line YAGs

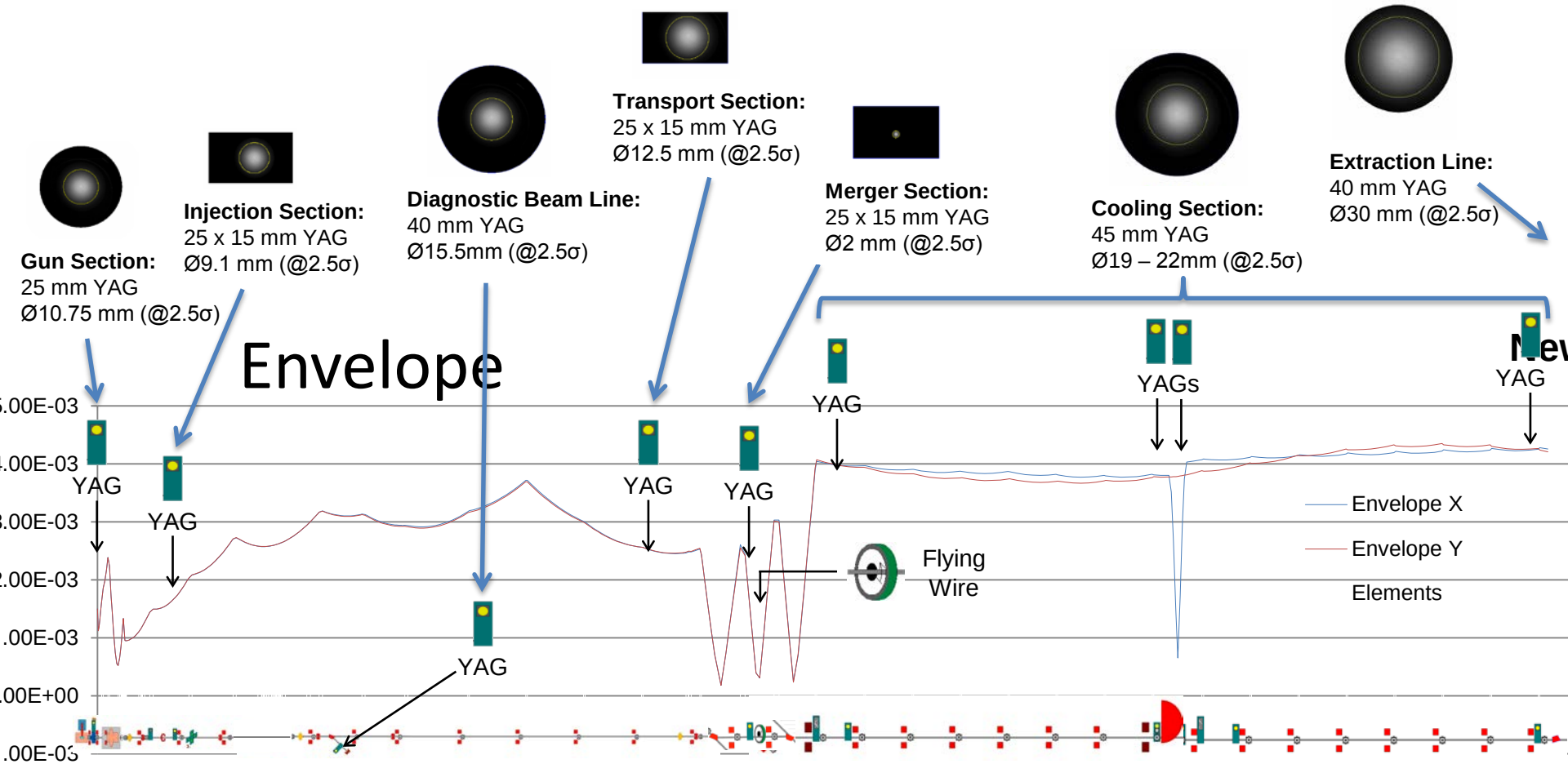

Commissioning Beam Line YAGs

Simulated image on YAG from Deflecting Cavity

Commissioning Beam Line:
(Long. Ph. Mon)
45 mm YAG
~20 x 20 mm

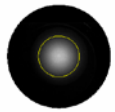

Commissioning Beam Line:
(PM with slit)
30 mm YAG
Ø10mm(@2.5σ)

Commissioning Beam Line:
(Scanning YAG)
30 mm YAG
Ø3.25mm(@2.5σ)

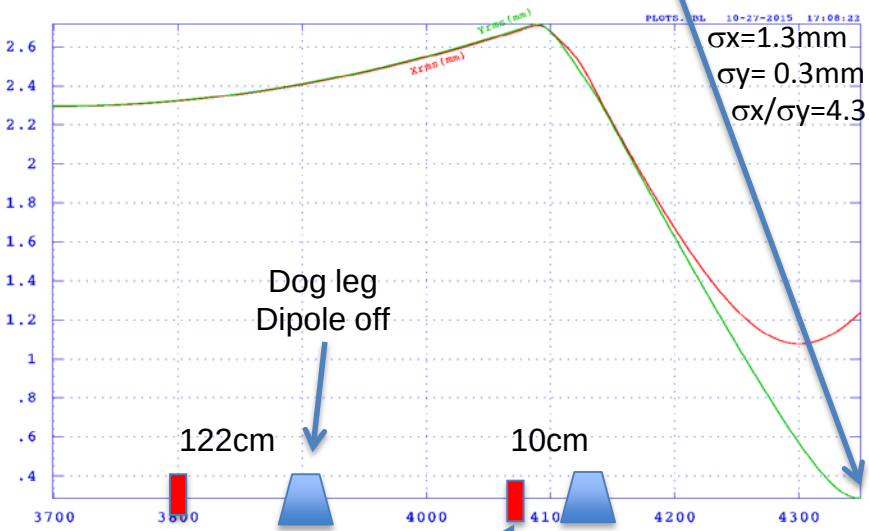

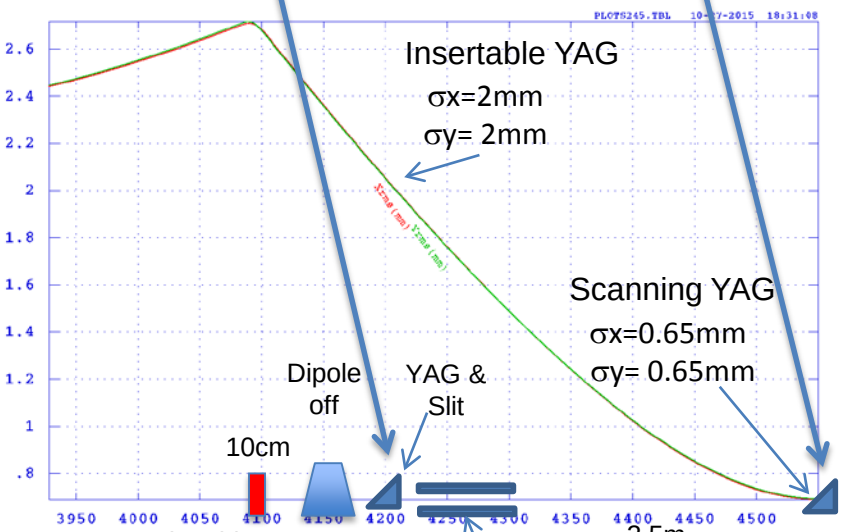

Static deflection plates
Gap=2cm, maxV=1.5kV, L=50cm

Dispersion

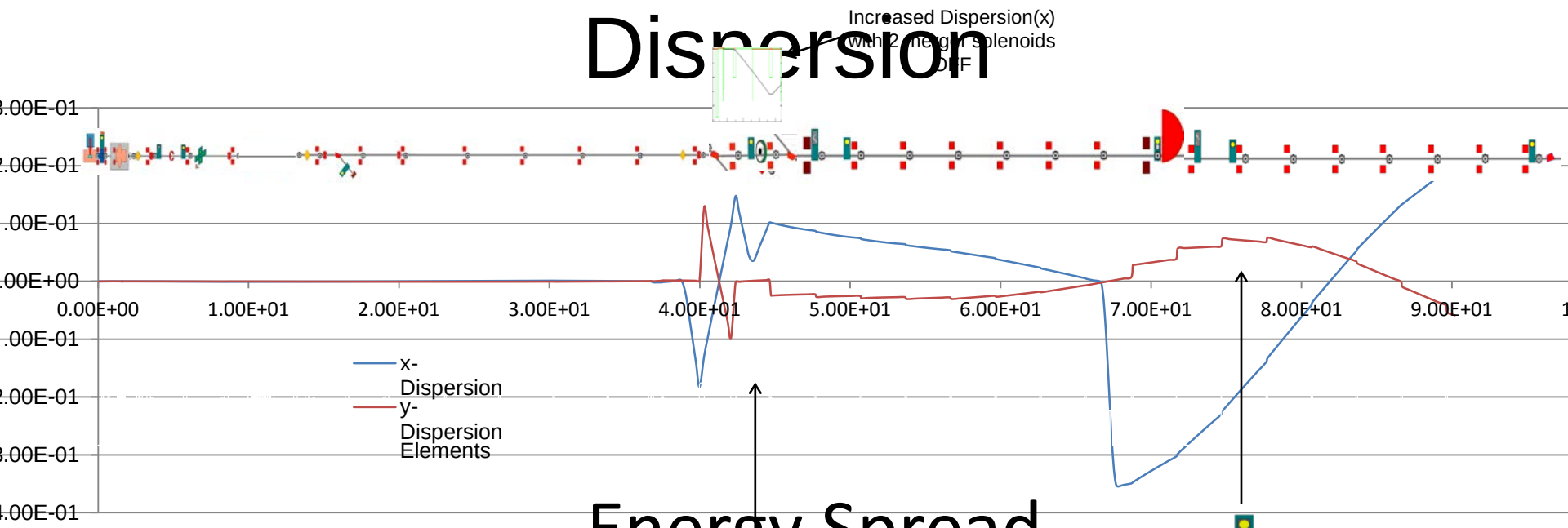

Energy Spread

NMR Probe for 180° Dipole feedback on magnetic field

- NMR Probe
  - 50mGauss/195 Gauss ($3x10^{-4}$)
  - 2.5 Hz measurement rate
  - Tests underway
    - Lengthen probe & bend away from beam plane
    - Reduce noise from 50mGauss down to 20
  - RFQ for integrated magnet power supply

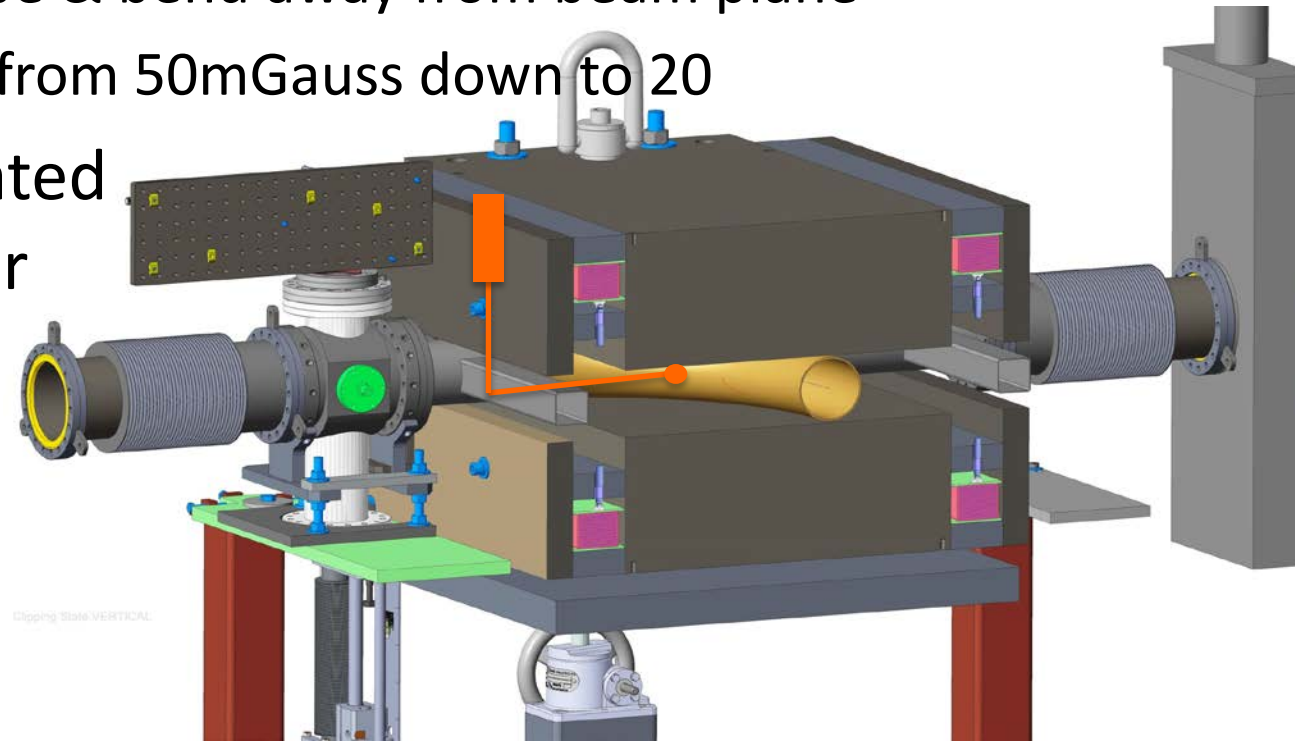

LEReC BPM Testing

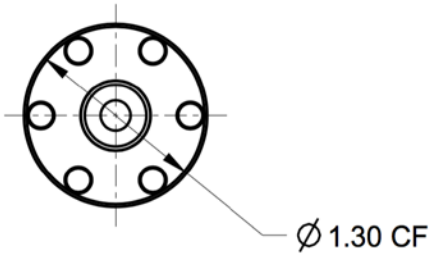

- Tests made with picosecond pulser from laser group

- Meeting on Gun BPMs today:

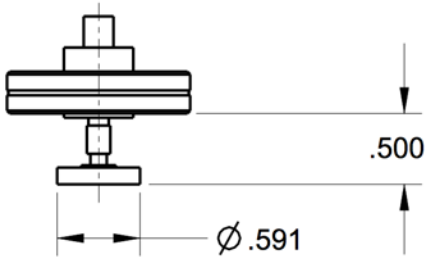

  - 4 new 15mm buttons in gun line
    - FRQ sent to MPF for shortened 15mm button
  - 2 new buttons for RF feedback
    - **Long CeC style buttons used for RF feedback**
  - Interest in solid state switches used by JLAB for cable swapping & calibration
  - Concern about 700MHz cavity signal leaking into BPMs
  - BPM electronics planned in a wall mounted half crate on the wall in the laser trailer to reduce cable lengths
  - Need an updated bunch length distribution graph from AP
  - Tests planned with 2nd harmonic input filters in the BPM electronics
  - Searching for RF effect on BPM signals in ERL

- Further testing planned to determine:
  - Sensitivity to single bunch
  - Position resolution noise figure for single 30x30pC macrobunch
  - Length of macrobunch train required for 50um position resolution

Stripline BPM study for Transport

- Signals in a RHIC type-2 BPM that would be produced by 30pC electron bunches in the LEReC transport line

➢ The striplines need to be **shorter** for 700 MHz rep rate to avoid signal overlap.

➢ The striplines can also be **narrower** since the signal amplitudes are larger than necessary.

  ➢ Narrower striplines will reduce **wake loss** factors of 5.8E-2 and 1.4E-2 for the 10mm and 37 mm rms bunch lengths Stripline BPMs seem to be a viable solution.

BPM signals for 30 pC bunches of rms length 10 mm (blue) and 37 mm (red)

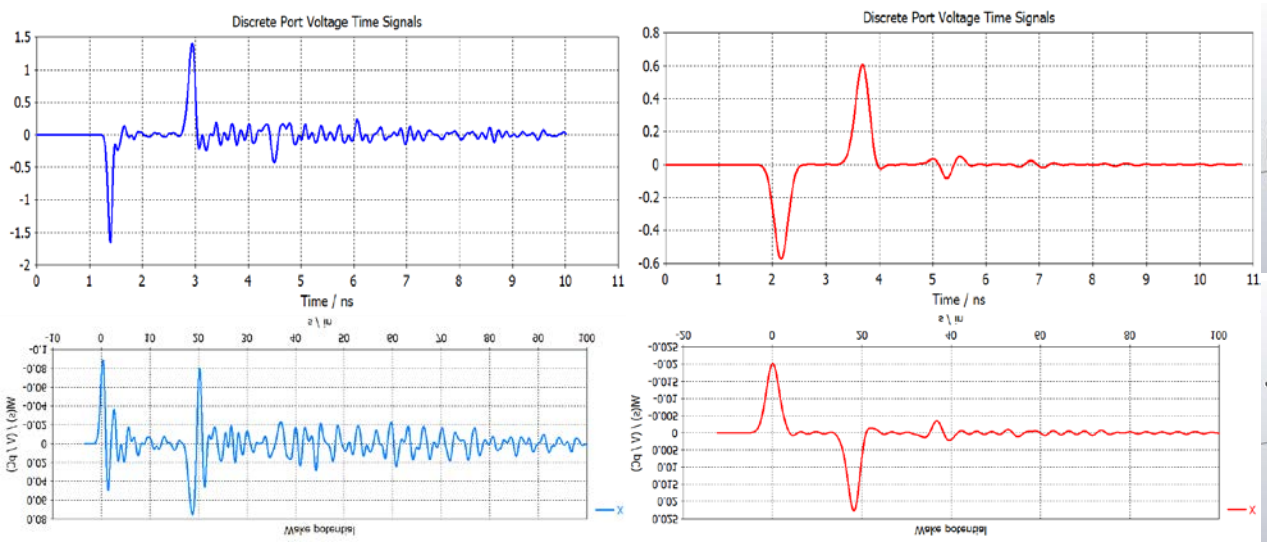

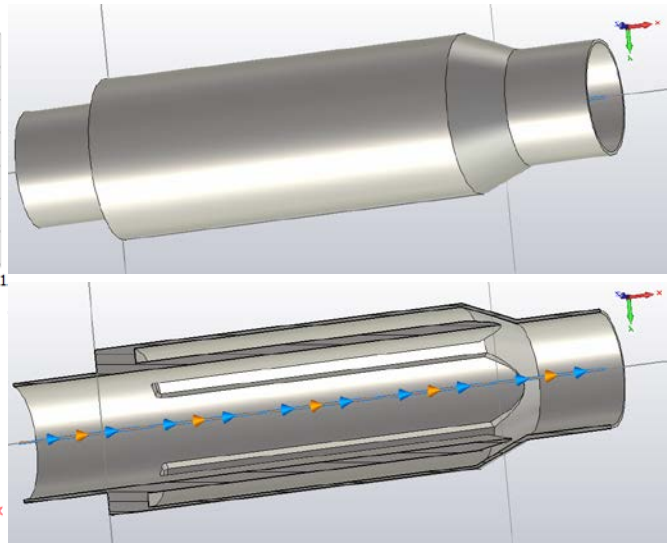

RHIC Orbit Stability

- [Per M. Minty] We need to measure the stability of the absolute position of the RHIC ion beams documenting the effectiveness of
  - (1) global orbit feedback, which likely is limited by corrector bit resolution (presently 12-bit) particularly at low beam energies
  - (2) 10 Hz feedback, which by design (cost savings) included only 1 corrector per perturbation; this has worked well so far, but obviously misses the second degree of freedom (position and angle) and the triplets are long (can't assume point-like excitation)

- If the ion beam trajectories vary by more than allowed, paths forward include
  - higher resolution control of the RHIC corrector dipoles (for global orbit feedback)
  - additional air-core dipoles for 10 Hz feedback.

- We should document beam trajectory variations in sector 1 (LEReC) and in IR2 (CeC) during RHIC startup and aim to implement localized weighting (ala Chuyu) of BPM measurements for improved trajectory control in these regions.

Summary

Analysis of data from FY14 Au+Au, 7.3 GeV/u run with LEReC-like lattice in IR2 (fill 17984):

		Blue	Yellow	
Variation in average orbits: (peak-to-peak, microns)	horizontal	200	200	controlled by orbit feedback
	vertical	150	200	
Variation in average angles: (peak-to-peak, microradians)	horizontal	< 10	< 10	
	vertical	< 5	< 10	
Variation in absolute angle: (peak-to-peak, microradians)	horizontal	< 10	< 10	controlled by 10 Hz feedback

Averaged trajectories :

peak-to-peak orbit variations (Q3+Q4)/2 ~ 200 microns

peak-to-peak relative angle (Q3-Q4)/16.3 m < 10 microradians

Absolute trajectories:

peak-to-peak orbit variations at BPMs (Q1 and Q3) ~ 400 microns (in blue, less in yellow)

peak-to-peak relative angle < 10 microradians (horizontal plan)

Orbit displacements (peak-to-peak) < 1/10th of expected rms electron beam size

Angular variations (peak-to-peak) well within 50 microradian tolerance for relative (rms?) ion-electron beam trajectory divergence

Longitudinal Phase Space Monitor – Commissioning Beam Line

- **704 MHz Vertical Deflecting Cavity**
  - Used for optimization and monitoring of phase and amplitude of the LEReC RF systems.
  - Scaled from Cornell ERL Injector 1.3 GHz design.
  - Time varying vertical deflection of bunch from head to tail.
  - Combined with horizontal dispersion from bending magnet (Dx = 1m at YAG) provides position (time) resolved energy spread along bunch.
  - Very low RF power <500W at highest beam energy.

- **Energy Spread**
  - 500μm width on YAG = 1×10^{-3} energy spread (Δρ/ρ)
  - 100μm resolution on YAG = resolutions of 5% of max Δρ/ρ

- **Bunch Length**
  - 30mm on YAG (100μm resolution) with 3 cm bunch length
  - Resolution of 30mm / 100μm = <0.5% of bunch length

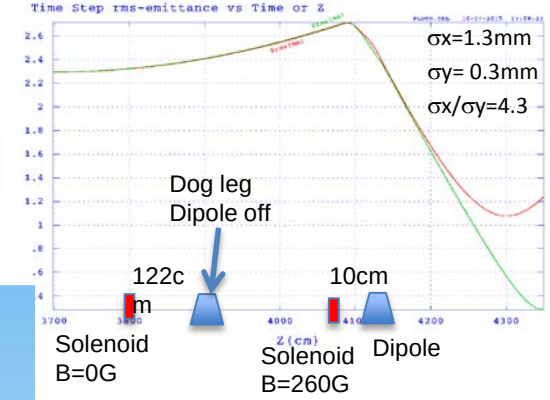

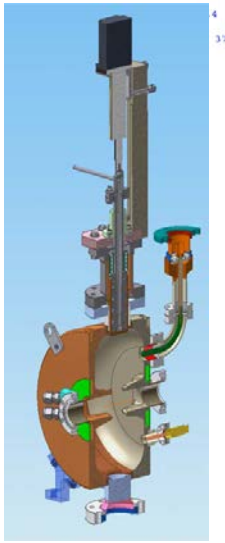

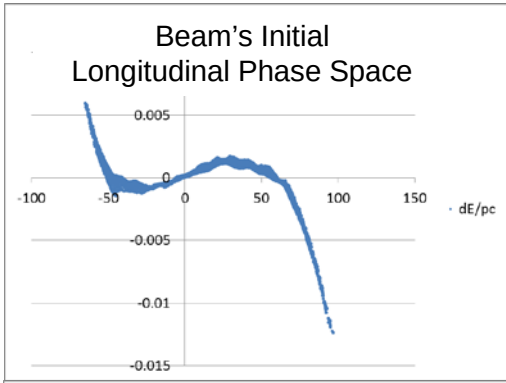

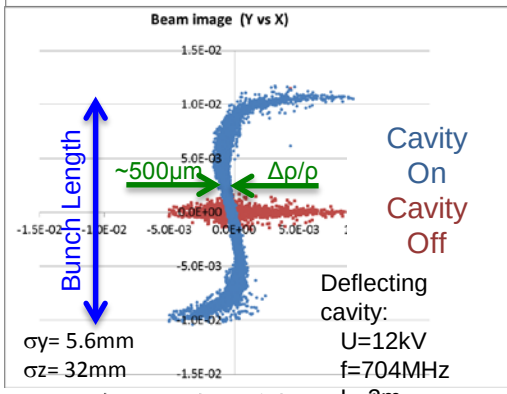

$\sigma_z = pc/eU \cdot \lambda/2\pi L \cdot \sigma_y$

S. Belomestnykh, et al., "Deflecting cavity for beam diagnostics at Cornell ERL injector," *Nucl. Instrum. & Methods A* **614** (2010) 179-183.

Simulations Courtesy of D. Kayran

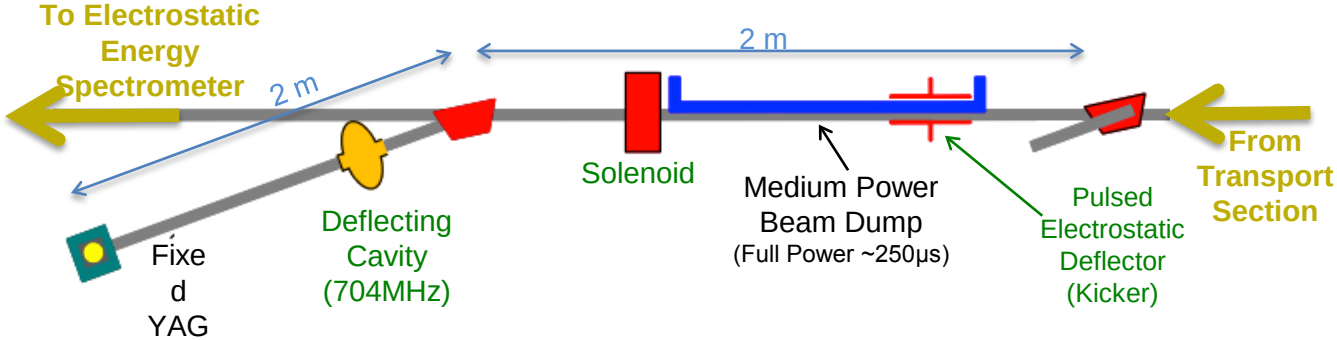

Daignostic ("Commissioning") Beam Line Layout

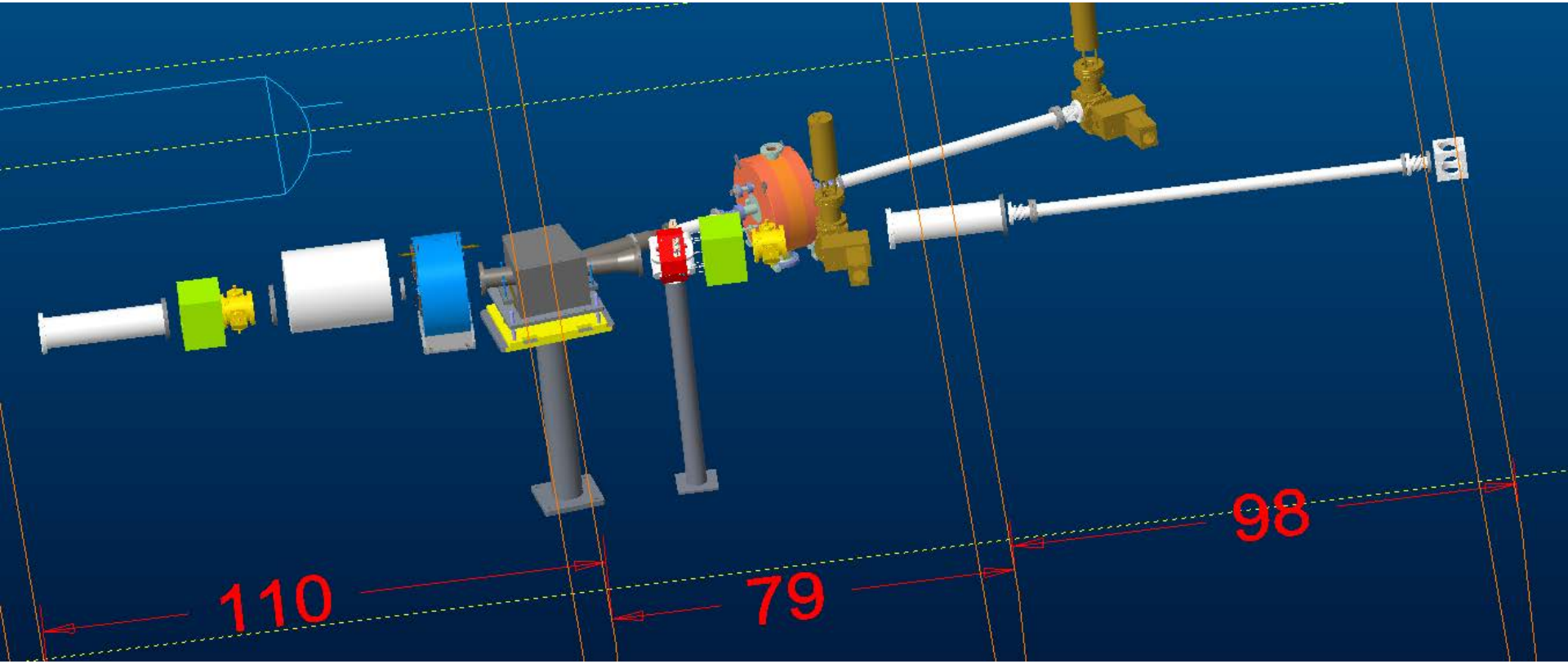

- Beam dump will lengthen to a water cooled beam pipe
- Spectrometer will deflect vertically
- Spectrometer YAG will scan vertically
    - ~4" beam pipe between deflector chamber & detector (YAG) chamber

Absolute Energy Measurement – Commissioning Beam Line

Current approach:

- ~2 kV electrostatic deflecting electrodes
- Scanning YAG screen (+/- deflection) over 100mm
- Calibration using Tandem ion accelerator
- Expected resolution:
  - 50µm optical resolution ÷ 100mm deflection = 5×10^{-4} which can be improved to compensate for noise with a fixed zoom lens.
  - By centering the spot on the screen using Center-of-Gravity image analysis, the sub-micron scan position gives the absolute energy.

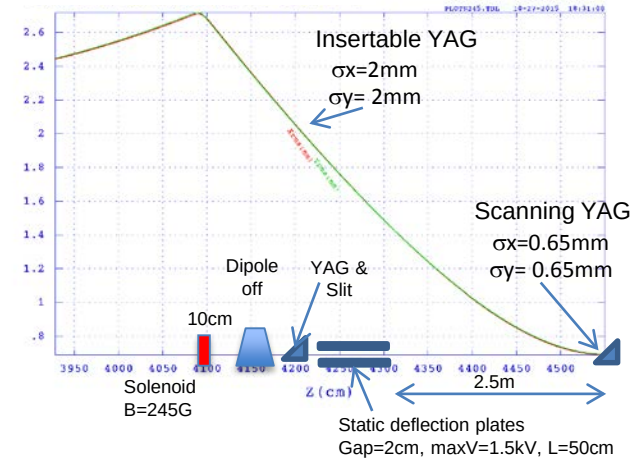

All Particles through beam line

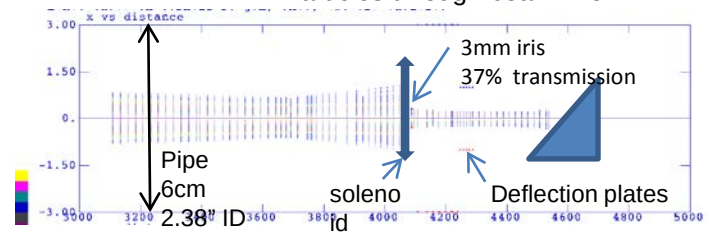

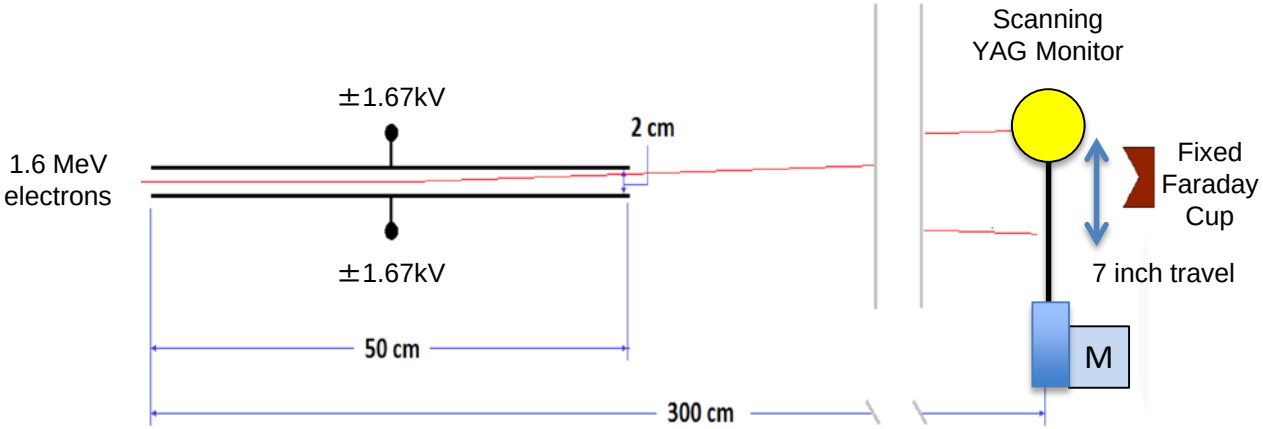

Simulations Courtesy of D. Kayran

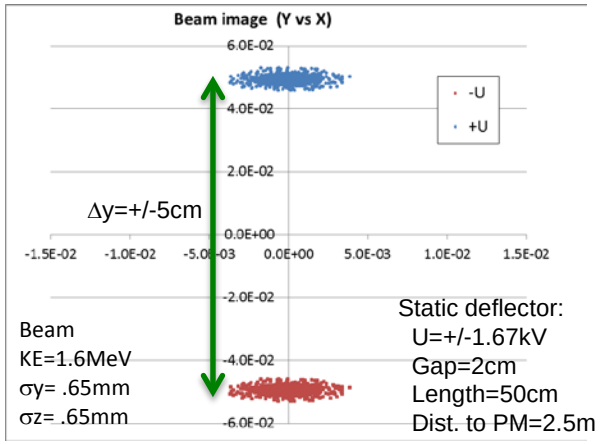

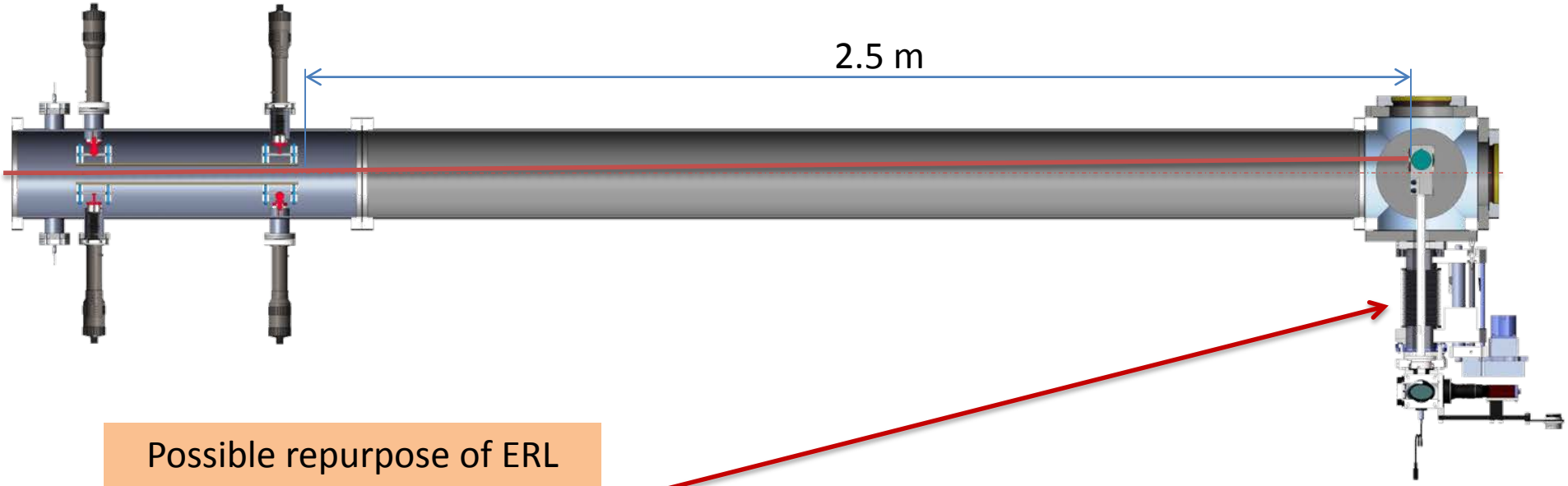

Possible repurpose of ERL DiPM for Scanning YAG (~$30K savings)

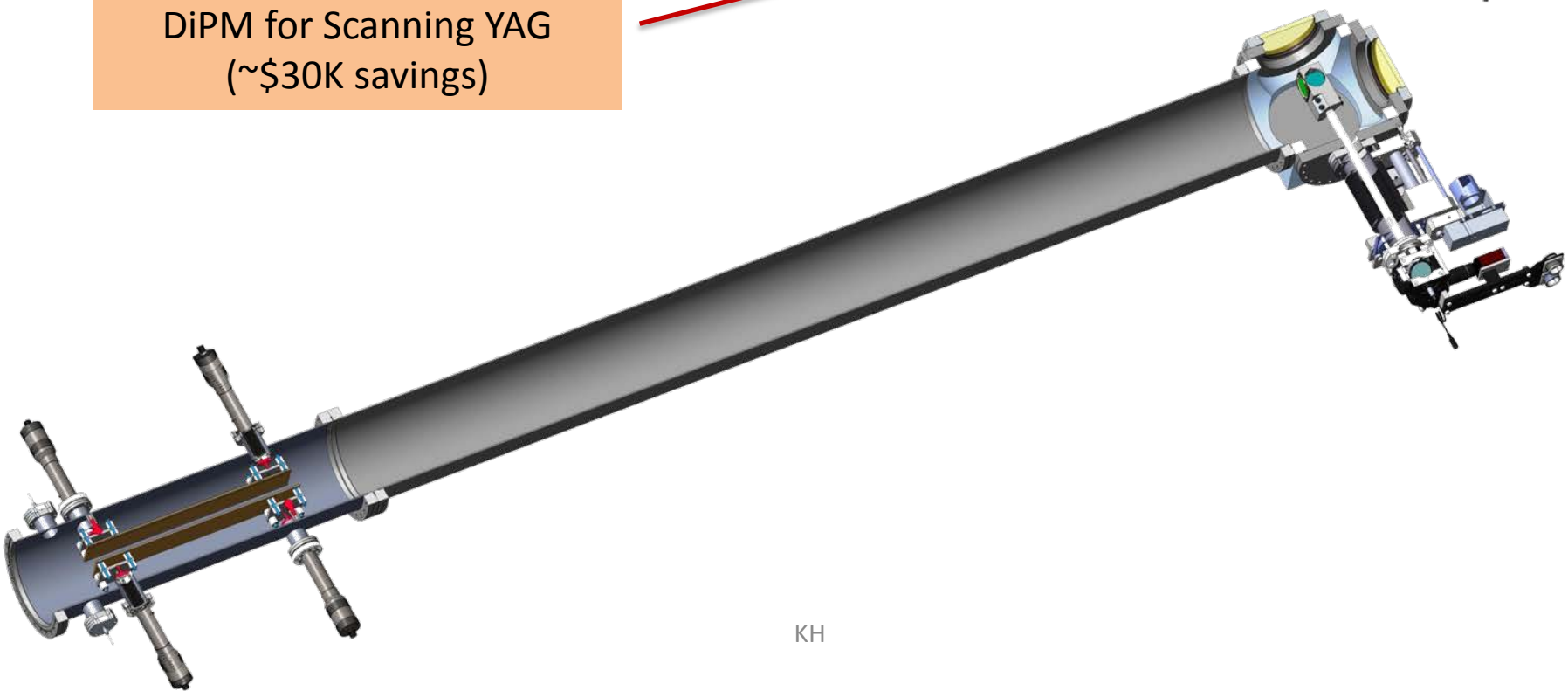

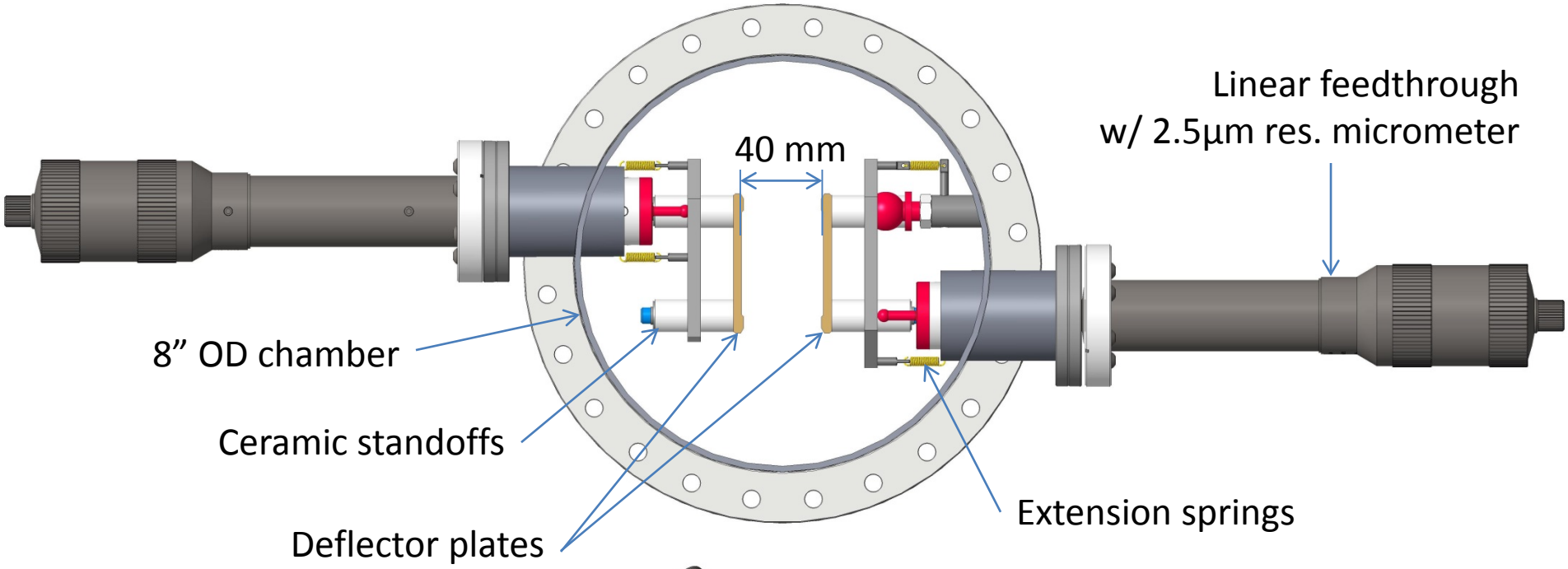
Linear feedthrough
w/ 2.5µm res. micrometer
40 mm
8” OD chamber
Ceramic standoffs
Deflector plates
Extension springs

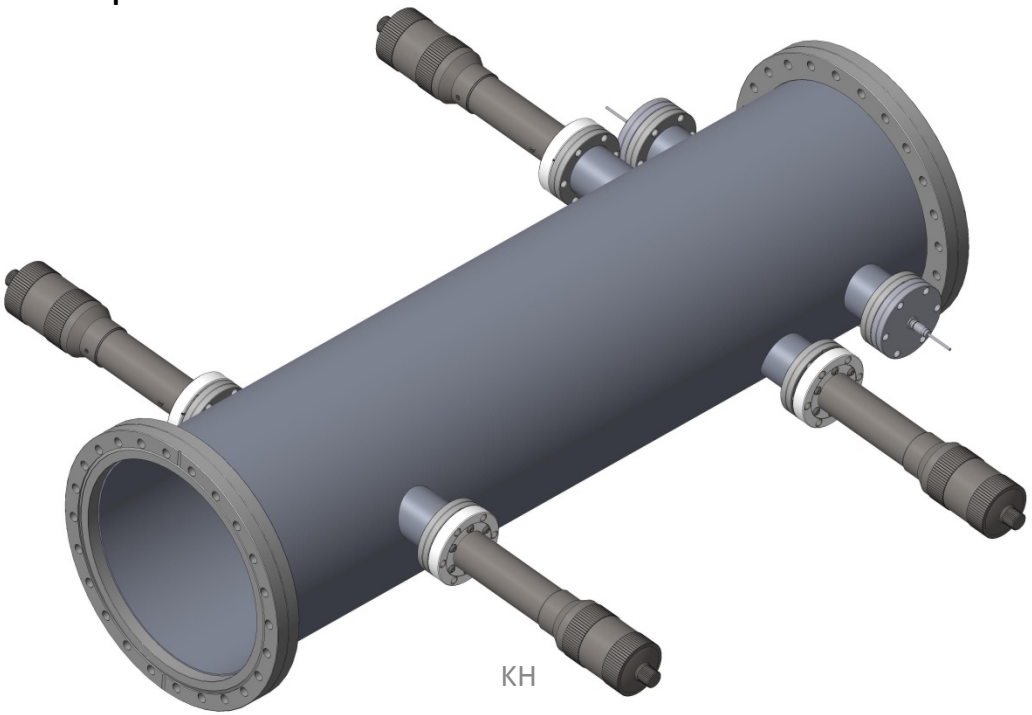
KH

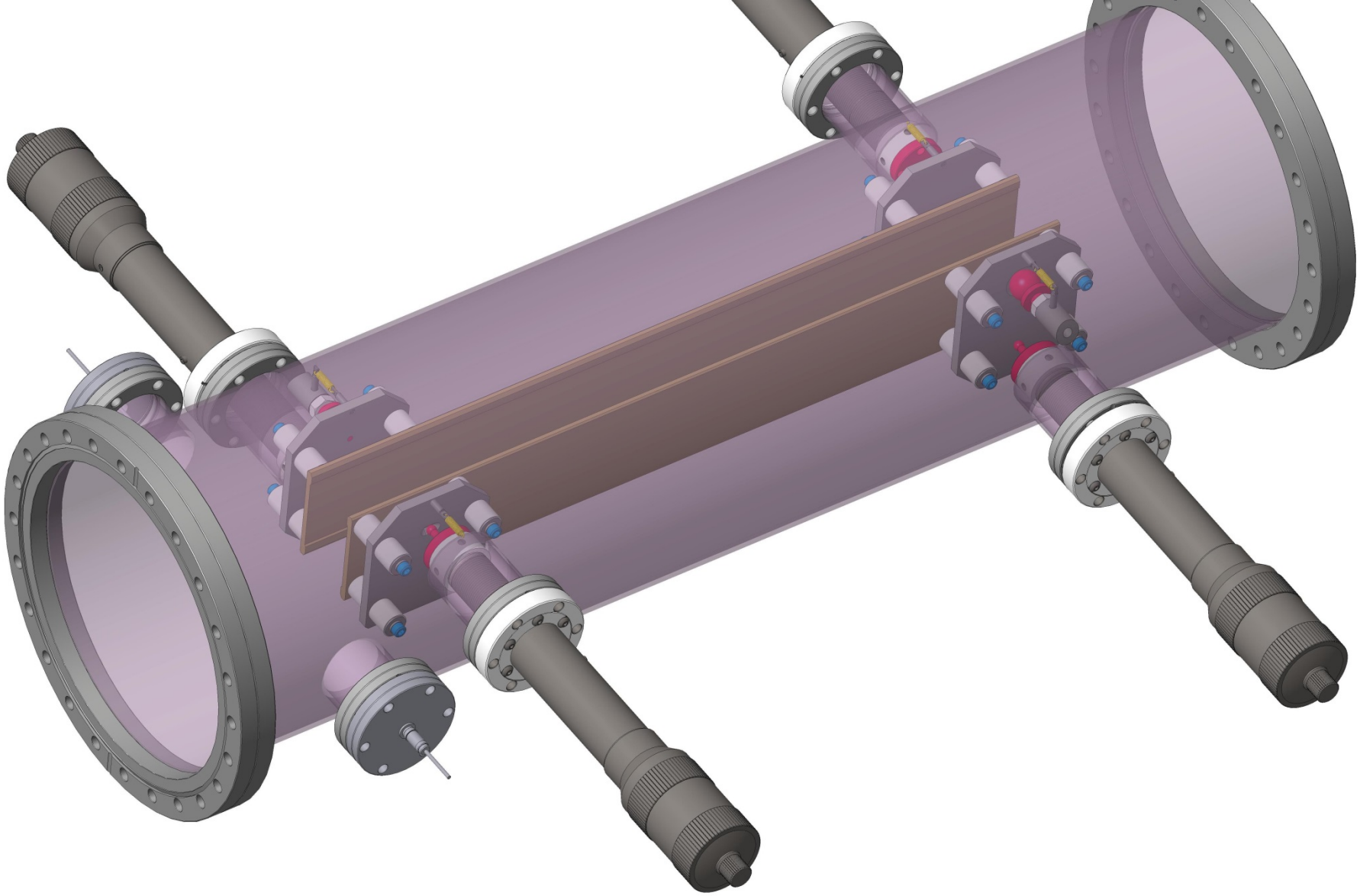

KH

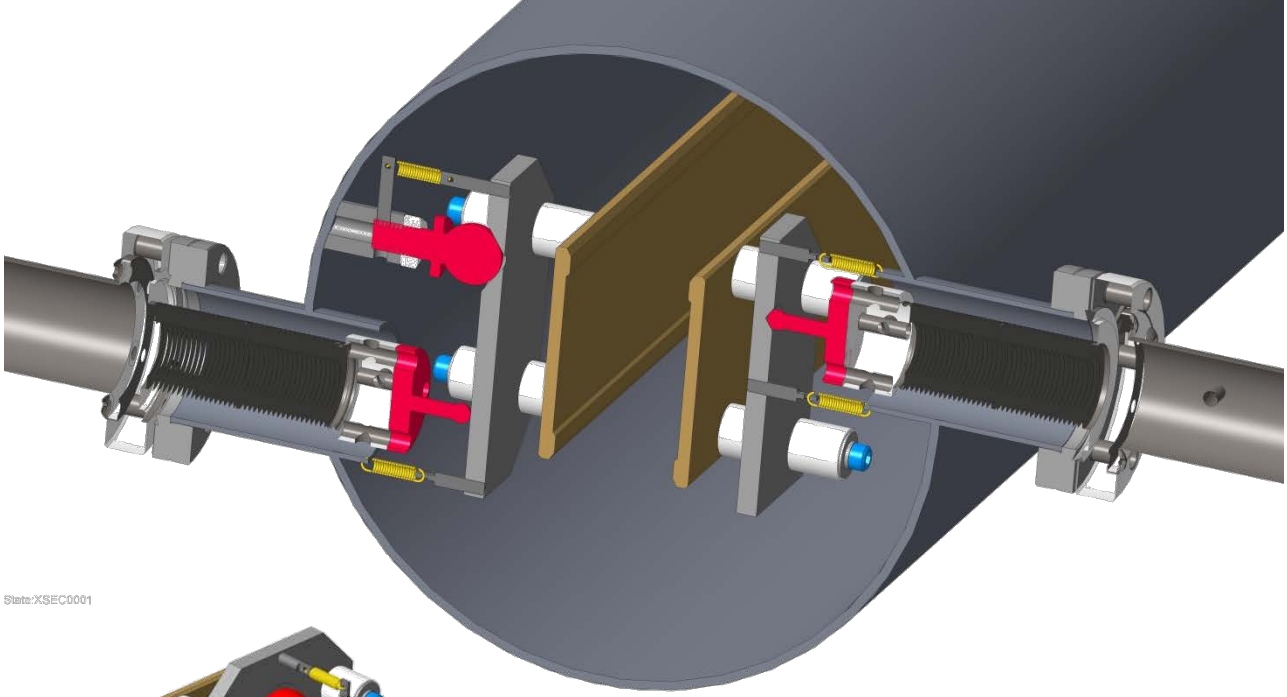
State:XSEC0001

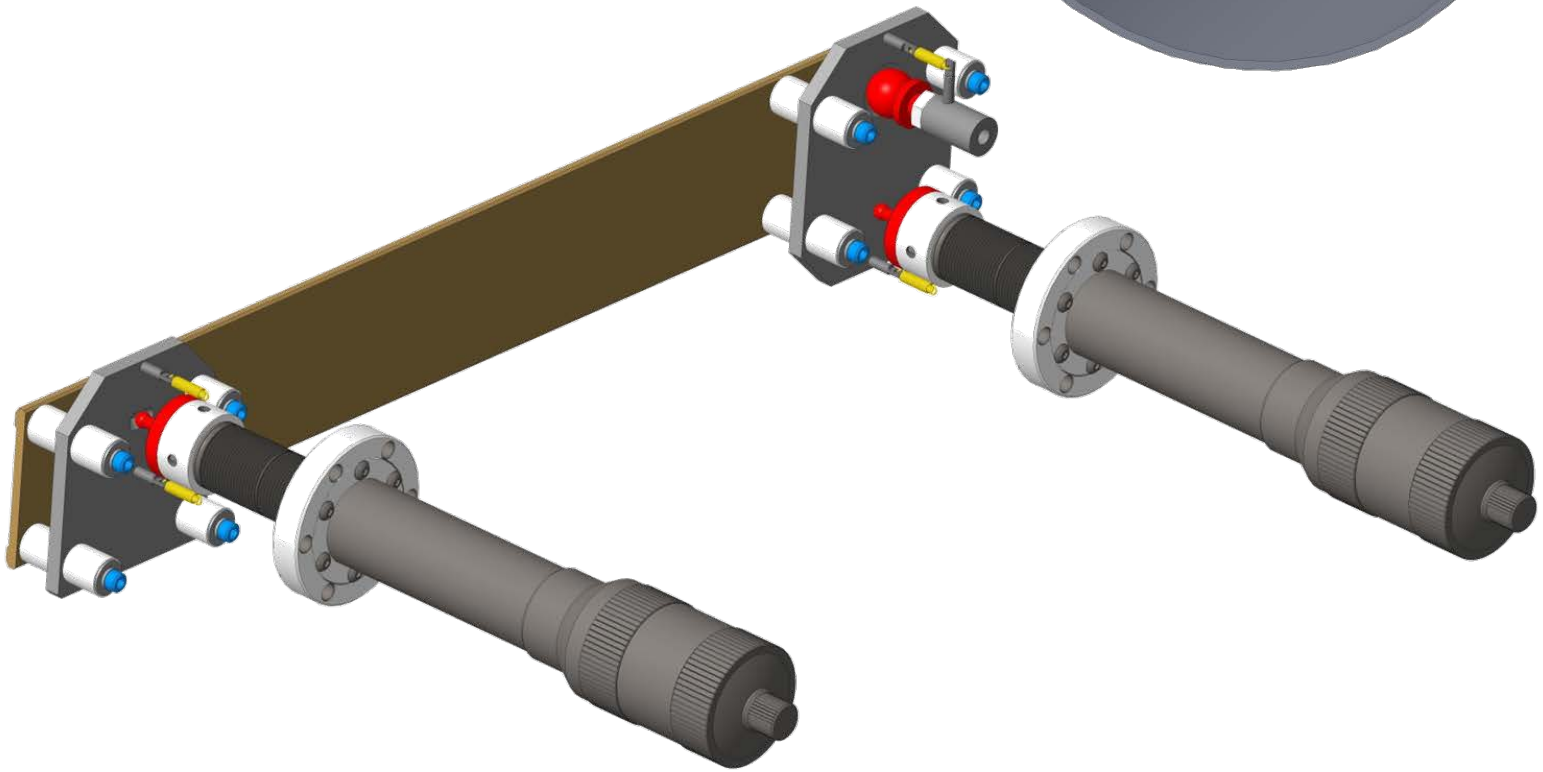

MDC Vacuum Products, LLC

Search here...

Linear Motion Feedthroughs

Introduction	Standard	High Temperature, Standard	High Temperature, Compact
	Miniature	Push-Pull	Rack & Pinion
	Pneumatic	Heavy Duty	Heavy Duty, Pneumatic
	Heavy Duty, Push-Pull	Heavy Duty, Tunnel Access	Heavy Duty, Micrometer

Features

- 2 inch linear travel
- Manual, precision micrometer actuator
- UHV compatible materials
- Welded bellows seal
- Bakeable to 100ºC
- Del-Seal™ CF port mount

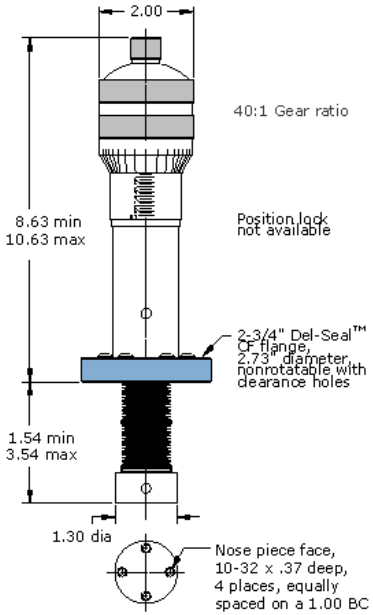

Description

Heavy duty, micrometer driven linear motion feedthroughs allow linear displacement of heavier samples and components with the accuracy and precision of fine pitch thread micrometers. These devices provide position indication on both rotary and linear scales with display resolutions of 0.0001" on the rotary scale and 0.025" on the linear scale. A full revolution of the rotary scale translates into 0.025" of linear travel. Unlike conventional motion feedthroughs, heavy duty models employ reentrant welded bellows construction allowing the use of sturdier and larger diameter shafts. Models with two inch maximum travel are offered on 2-3/4" Conflat® compatible Del-Seal™ CF metal seal flanges.

Specifications	
Material	
Flange / Actuator body	304ss / Anodized aluminum
Shaft seal	AM 350 welded bellows
Vacuum Range	1x10-11 Torr
Temperature Range*	-20ºC to100ºC
Axial load	10 lb max.
Lateral load	20 lb @ 4" extension max.
* UHV units are bakeable to 230ºC with actuator removed.	

Recombination Monitor: Ion Collection

Recombination Detector – Secondary Cooling Indicator.

Collection of recombined ions:

- Lost at predictable location
- Detector: PMT + Counter
- Development underway of a lattice with a dispersion waves in the cold arcs
- Roman Pot type detectors envisioned in the cryostat to collect the Au^{+78} ions.

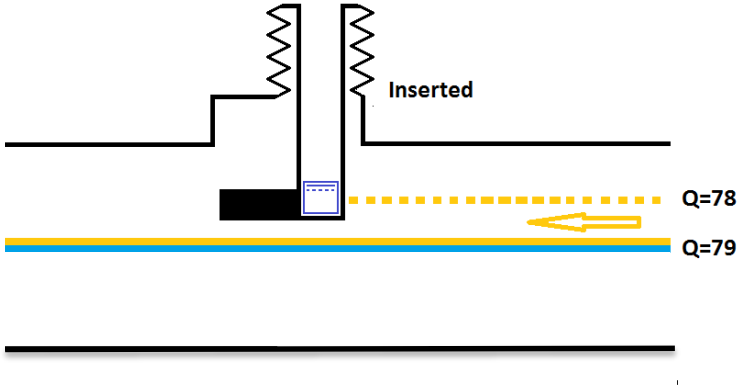

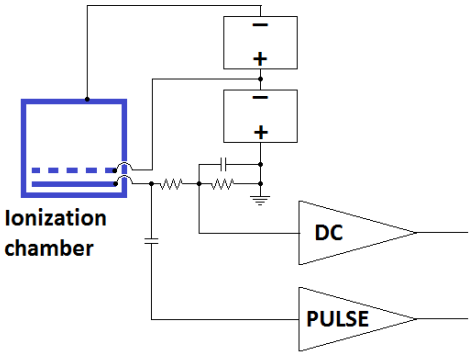

Courtesy of Peter Thieberger

Deuteron Recombination Detector

How to proceed?

- simulations needed for blue detector

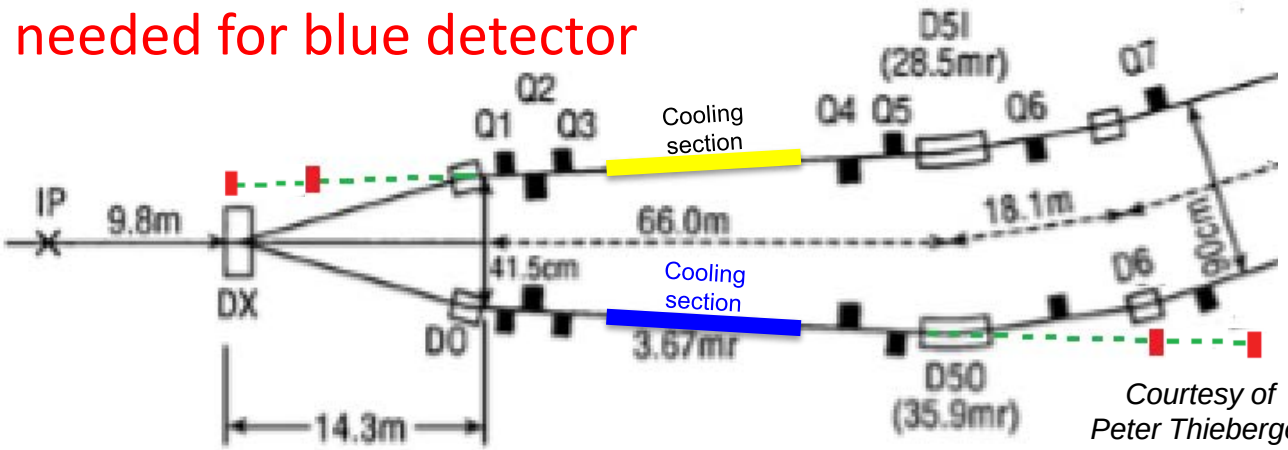

Courtesy of Peter Thieberger

- Investigating deuteron-electron recombination for initial electron beam alignment and energy calibration.
  - Strong, localized signals allow detection starting far from optimal alignment.
  - **Neutral** deuterons from deuteron-electron recombination are not deflected in the arcs.
  - Detectors located outside of the cryostat (red rectangles) will detect these particles and the showers they produce.
  - Detector telescopes can be used to reduce background if necessary.
  - The structure of the expected showers will be studied using MCNPX simulations.
  - A small deflection will result after the neutral deuterium losses its electron when traversing the beam-pipe. This deflection will be calculated and taken into account.

Notes from previous meeting (1-14-16)

- High Current Profiles
  - Wire scanner
    - Plan to meed with Bruce Dunham next week to discuss details
  - Scanning-Beam Profile
    - Low energy provides for low current kicker power supply
    - Need ceramic break but with longitudinal wires for image currents that will suppress eddy currents during the magnetic pulse
    - Direct current sense on a plunge able wire
    - Wire can be retractable through a valve for wire replacement
  - Gas Jet Profile was suggested. Peter found a reference to a "curtain" pulsed supersonic gas jet beam profile monitor at this link: https://jacowfs.jlab.org/conf/y15/ipac15/prepress/MOPWI006.PDF and pictured here to the right.
    - Looks complicated and the bias on the detector will be a danger to the low energy beam
  - Aperture scan Insertable apertures in the cooling section can be used to
    - approximate beam profile from tails
    - Measure angles of scalloping beam between solenoids

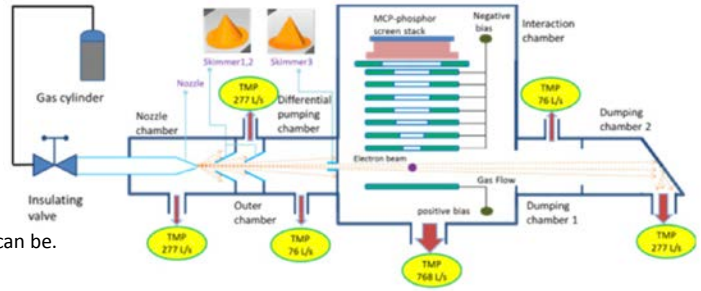

- Current Measurement
  - Dmitry needs to measure beam current from Gun during gun commissioning.
    - Can laser box profile monitor be made isolated to pick-up beam current?
    - Can the ICT be mounted near the gun (before booster installation) for commissioning current measurements?
    - Dmitry will make a list of instruments needed during gun commissioning and how far away from the gun they can be.
- Laminated core in 20 degree dipole is needed at dog-leg for fast switching to commissioning beam line.
  - Magnet is already fabricated
  - Longitudinal phase measuring line needs a similar 20 agree magnet, which can be made with a laminated core and then swapped with the merger dipole.
- Energy Measurement in cooling section has a new BPM for angle measurement
  - Need to know its distance from the hybrid BPM to calculate angle resolution
  - How much will this distance be able to be increased? What will have to move?
  - The quads shown near the solenoids were modeled on the 180 dipole side of the solenoids. Jorg explained that additional skew quads will be required if they are on the other side of the solenoids (as shown in this presentation). This is desirable so as not to interfere with the angle measurements. ACTION/DECISION REQUIRED!
  - No updated from Caylar on NMR probe yet.
- Gun Instrumentation
  - May need to move laser mirrors downstream of the 2nd solenoid for a clear aperture. May not be enough space!
  - New laser box profile monitor design provides 19x19mm YAG crystal. This was deemed large enough for the expected beam size by the group. Design efforts to continue.
  - Much discussion on how to image cathode through laser injection port. This will be implemented (with risk involved in getting a quality image) and thus will be in addition to the dedicated cathode inspection mirror.
  - Laser mirror positioning study continues. Laser box & instrumentation placement on hold until laser mirror placement is fixed.
- BPM Systems
  - Eight 15mm buttons for gun requested from MPF with reduced length. Waiting for 2nd response.
  - Two 15mm buttons for RF pick-ups will have to be the long design used in CeC due to the current chamber design.
  - Rob is planning to employ the use of solid state switches, as used by JLAB, to switch cables to minimize offsets.
  - Peter T.'s work simulating striplings for the transport section met with lots of questions of why the buttons aren't sufficient.
    - Igor suggested putting narrow-band ringing filters and amplifiers near the buttons in the tunnel, as Kevin Mernick advocated the use of local amplifiers too. These switches have good results in the stochastic cooling electronics since 2 years.
    - Stripline development wasn't budgeted for; however new buttons larger than 9mm were also not budgeted for.
  - Rob is still tracking down slow drifts in tests with long cables and splitters into the RHIC tunnel. Temperature affects are being analyzed.
- RHIC Orbit Stability
  - Study started by Michiko; time didn't allow discussion of the progress.
- A concept of the electrostatic spectrometer is complete (3D model)
  - Will be used to build schedule & cost estimate
  - The YAG scanner could be repurposed from the ERL DiPM (saving ~$30K)
  - Igor suggested a fixed YAG & optics system with a scanning vacuum chamber attached to bellows
    - This may conflict with the system's requirement to be rigid and and self-contained but can be considered during the official design effort.

Notes from previous meeting (1/7/16)

- **DC Gun:**
  - There is a question on which side of the gun to put the laser table in order to clear cryo equipment.
  - Particle Studio simulations have a problem with v<c as is the case in the gun area. It was suggested to simulate based on v=c and scale by the difference in Beta.
  - We need to generate a model of the gun transport suitable for Particle Studio simulation. We'll need to include the shielded version of the bellows.
  - Cathode imaging was debated without a firm opinion on whether or not it needed to be available during operation or allowed to block the electron beam during imaging.

- **Rastered Beam Profile Monitor:**
  - If used during operations, we'll have to plunge in the filament, make two sweeps across it (back and forth), and remove it. The profile would be generated by plotting the signal from an in-vacuum scintillator (or secondary electron pick-up) against the steering magnet current (predicting beam position).
  - How to pick-up secondary electrons without a biased pick-up (bias could affect the beam)
  - The beam energy is too low for an air-side PMT.
  - Toby will ask the concepst's author (Mike Tiefenback) about its use at our low energy (1.6MeV).
  - Measurement of profiles with high power beam seems prudent as Cornell showed very different profiles for low and high energy; however, their measurements were taken with varying parameters, putting their results in question.
  - What do we really loose by giving up an online high power profile measurement? The diagnostic beam line can make a sampled measurement.

- Concerning using the diagnostic beam line (or "commissioning beam line) we may need the 20 degree magnet to have a laminated core to facilitate switching on and off of the magnet from time to time.
  - Is it too late to change the core properties of this magnet?

- Toby will request an update on Caylar's progress on NMR probe and proposal for magnet power supply integrated with their probe for the 180 magnet.

Notes from last meeting (12/17/15)

- The LEReC gun will be commissioned with a fiber laser transport.
  - Fear of nonlinearity in the fiber suggests an inability to reproduce the “beer can” shipped laser pulses & macro pulses.
  - Based on experience at the JLAB FEL, we are preparing for the likelihood of needing an evacuated (or dry nitrogen filled) laser transport pipe system.
- Concerning the BPMs in the gun-to-booster section, current test data suggests requiring averaged data over 1 – 10 us long trains of macro bunches to provide 100um position resolution using the 9mm buttons.
  - A small meeting may be held with Michiko, Dave, Rob & Alexei to decide if buttons will be sufficient.
  - We are ready to request a quote for MPF to redesign their 15mm buttons (used at CeC) with a much shorter depth.
  - We may plan to center the beam using many turns of beam for good position measurement followed by profile, emittance, energy & energy spread measurements in the single macro bunch mode.
- We need two BPMs between the 180 dipole and the solenoids to make an accurate beam angle measurement.
  - We need to calculate how accurate of an angle measurement can be made adding a BPM between the hybrid device and the solenoid.
- To synchronize the laser to booster RF (with feedback loop)
  - we will add a photodetector to sample the laser just before entering the laser box
  - Kevin(s) Smith & Mernick requested to add a pair of button pick-up electrodes to the laser box to provide beam based feedback to LLRF as well.
- Concerning imaging of the cathode, a fixed mirror and viewport is cheaper & better than a plunging one as the cathode can be imaged while producing beam.
- The longitudinal phase monitor (in the commissioning beam line) needs 0.4 degree resolution for proper energy spread measurement. The current location provides roughly 5 degree resolution based on current optics simulation.
  - Michiko will re-evaluate the simulated data.
  - The entire beam line may need to move downstream of the 180 degree dipole.
  - The optics design is waiting on a firm design and impedance analysis of the beam kicker & dump.
  - The optics should be designed so that the beam at the center of the kicker is imaged onto the YAG screen

Notes from previous meeting on 12/3/15

- 1st diag. B/L magnet needs to be an ERL 30 degree dipole, 20 degree is shown in this layout.
- ERL aperture is actually smaller... maybe choose the larger aperture dipoles in the ERL dump. George to advise…
- Discussion of running without booster: need corrector every 1m, or 2 layers of mumetal, or use long helmholtz coil...
- New goal to run beam without booster, through all planned instrumentation (mostly from ERL) to the FC in the first diagnostic beam line.
  - Alexei would like to install 8kW CeC beam dump to test gun next year.
  - Plan to move the YAG (just before 704MHz warm cavity) upstream to just after the 1st diag. beam line for next year's test.
- need to take care to run magnet cables so as not to generate stray fields! Don Burno will look for twisted pair power cable for magnets <20A. It was suggested to eliminate last dipole before the beam dump. However, this will inceased back shine to the instruments.
  - we may change the dump over- focusing quadurpole to a solenoid. Dmitry will look into this. will discuss during design in 2 months...
- It was suggested to elongate the laser box and incorporate the two new ports into the box instead of a cross to provide a plunging cathode imaging mirror.
  - A back-up plan shall be to image the cathod through the laser entry port and steering mirror using a mirror in air on axis with the laser with an aperture for the laser to pass through.
  - A better alternative is to simply add a fixed mirror and viewport to avoid the plunging mechanism and also allow for cathode imaging simultaneous to beam production.
- Request for quotation for a magnet power supply was sent today to Caylar to work with the NMR probe for feedback on the magnetic field.
- Concerning the Flying wire scanner, Igor suggested a carbon sheet to thermally image the profile of the beam. Peter commented that this works for beam finder but suffers from nonlinearities for an accruate profile? Could we back out the nonlinearities?
  - need to model device for impedance
  - Need to ask Cornel about results with titanium, is it any better than carbon?
- Optics studies from Dmitry show the same optics as presented to DOE in Nov. (shown here).
  - Open question is whether or not to add BPMs to this portion of the beam line and is any MuMetal shielding required.
  - John Hock is involved to apply eLens BPM & drift tube designs toward the deflector and kicker designs for LEReC.
- Concerning the Electrostatic Energy Spectrometer, the deflector voltage will be increased toward 5kV so that the 2cm gap can be enlarged to accommodate the beam. The gap will be increased to 4cm.EndFragment
- Concerning the recombination monitor, the open issue here is the choice of detector to install inside the cryostat and whether or not to make the detector moveable. A warm motion feedthrough like what is being installed on the CeC 700MHz tuner may be a candidate.

Notes from previous meeting on 11-24-15

- **CW vs MacroBunch beam structure**
  - Alex reported that we are buying high power couplers capable of CW operation in the event that CW operation is required. Thus only additional RF power amplifiers would need to be added.
  - It is not yet clear if this is an advantage or disadvantage for BPMs. Certainly, CW operation would eliminate the possibility of using single electronics boards for ion & electron measurements. But, this would only strengthen the 700MHz electron beam position measurement.
- **Cathode Imaging**
  - Proposal to add cathode imaging to Cornell Gun design via a penetrated mirror in laser entry port to image cathode along the path of the laser. This depends on the useable aperture of the laser steering mirror that would also be used for imaging the cathode.
- **NMR Probe**
  - Caylar reported in a video conference this morning that they are making good progress with their NMR-20 instrument and is measuring 166Gauss with +/- 50mGauss noise at a 2.5 Hz measurement rate (400 msec sliding average window). Their goal is a resolution of 20 mGuass.
- **BPM Testing**
  - Rob H announced that test results have showed excellent rejection of the 700MHz electron signal while measuring the low frequency ion signal due to the use of the 10MHz diplexers (see slide 6).
  - Moreover, significant temperature dependance of the system shows the need for temperature controlled racks for the BPM electronics. One long term drift has yet to be correlated with a cause.
  - More testing with 700MHz trains of short bursts is necessary to investigate suspected frequency dependance of electrical center of the buttons in the cube. We are investigating faster picosecond pulses, 700MHz ARB's and perhaps a properly matched Goubau Line or alternative structure for testing the button cubes.
- **ERL Profile Monitors**
  - Joe explained during a discussion about the Ferrite modified chambers that we plan to move forward with totally new designs for the profile monitor chambers in order to match the beam line aperture and to correct for impedance.
- **Flying Wire Profile Monitors**
  - We decided to move forward with requesting a serious quote for the procurement of TWO units from Cornell. We may be fortunate enough that single macro bunch profile measurements of the beam are representative of the high power beam BUT the Flying Wire PM is the only instrument that can provide profile measurement during operation.
- **Longitudinal Phase Space Monitor**
  - Kevin Mernick explained that a recent meeting was held where the parts of the commissioning beam line were assigned to people to work on, as follows. Dmitry will present the beam line optics in a meeting next week. BPMs and solenoids may need to be added.
    - Fast Kicker – KM, MMB, KSS
    - Internal Beam dump – JT, MMB
    - Transverse Deflecting Cavity – BX, JT, VV (Cornell)
    - YAG Screens, Cameras – TM
    - Other Diagnostics (BPMs?) – RM, RH
    - Energy Measurement - MM
    - Beamline Optics – DK, JK
    - Magnet Power Supplies – DB (I'll at least clue Don in re: this minor side project)
    - Vacuum, Beamline Layout/Construction – JT
- **Electrostatic Energy Spectrometer**
  - Peter is working on the preliminary design of the deflector that an ME will be assigned to work on to aid in developing a cost estimate. I (Toby Miller) will work on estimating the YAG profile monitors and associated optics and scanning motion control for the beam line.
- **Recombination Monitor**
  - Felix has a promising RHIC lattice that can produce ~8sigma of separation between Au+78 and Au+79 ions in dispersion bumps in the cold defocusing quads set up using the gamma t quads.
  - A Roman Pots style detector will need to be designed to move a detector into the dispersive space of the beam.
  - CERN is experimenting with installing beam loss monitors inside their crystats. The results could be useful here in choosing a suitable detector.
  - Wolfram pointed out a US vendor of Diamond Detectors, Applied Diamond, Inc. He also suggested considering new Plasma Radiation Detectors being introduced by Integrated Sensors, LLC
  - We discussed installing the double coincidence detectors for deuteron recombination detection as the detectors are outside of the vacuum. The yellow detector in the IP should work well but the blue detector has lots of material impeding the signal and will require further simulation to determine its effectiveness.