LEReC layout

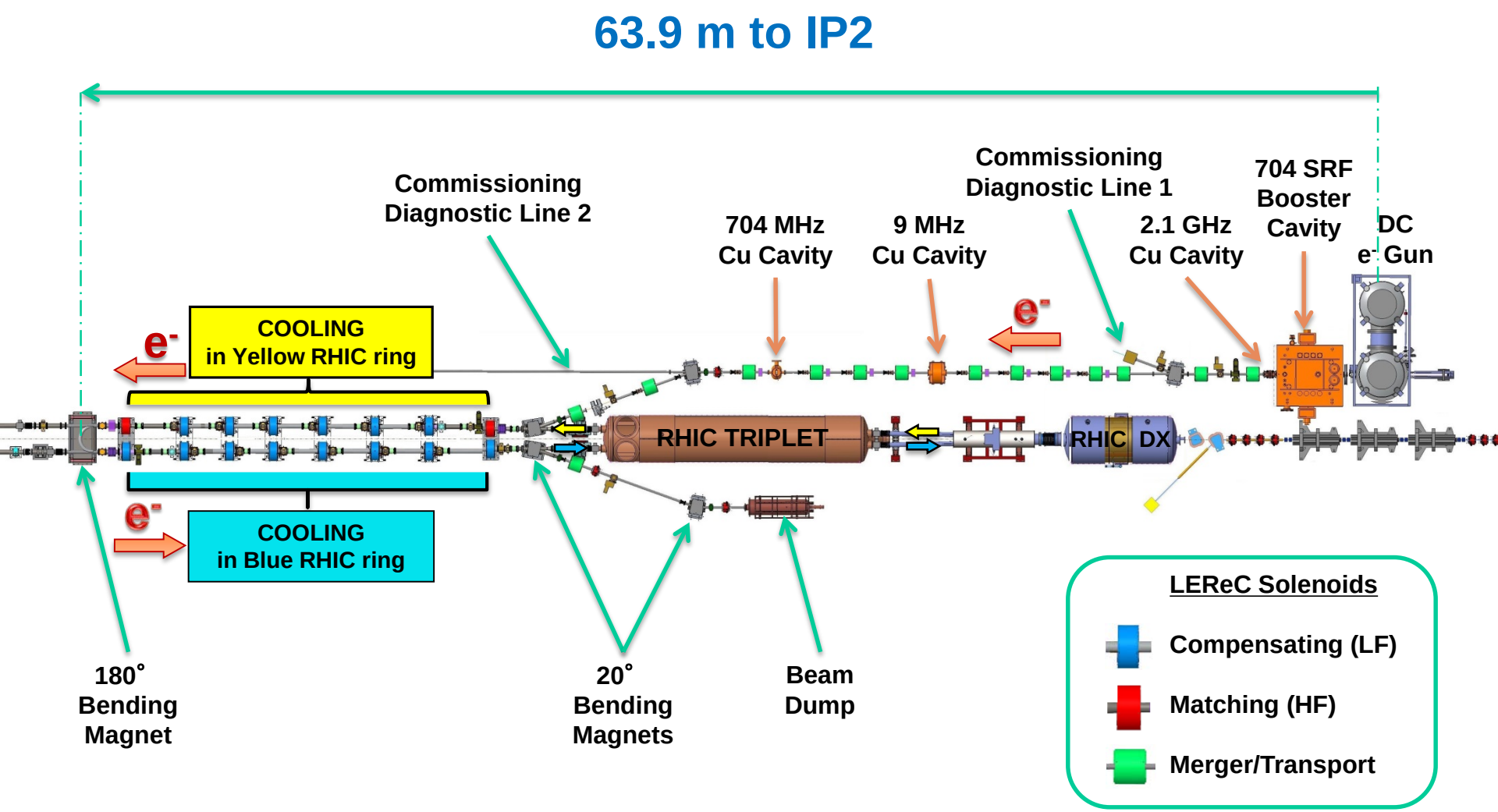

LEReC apertures

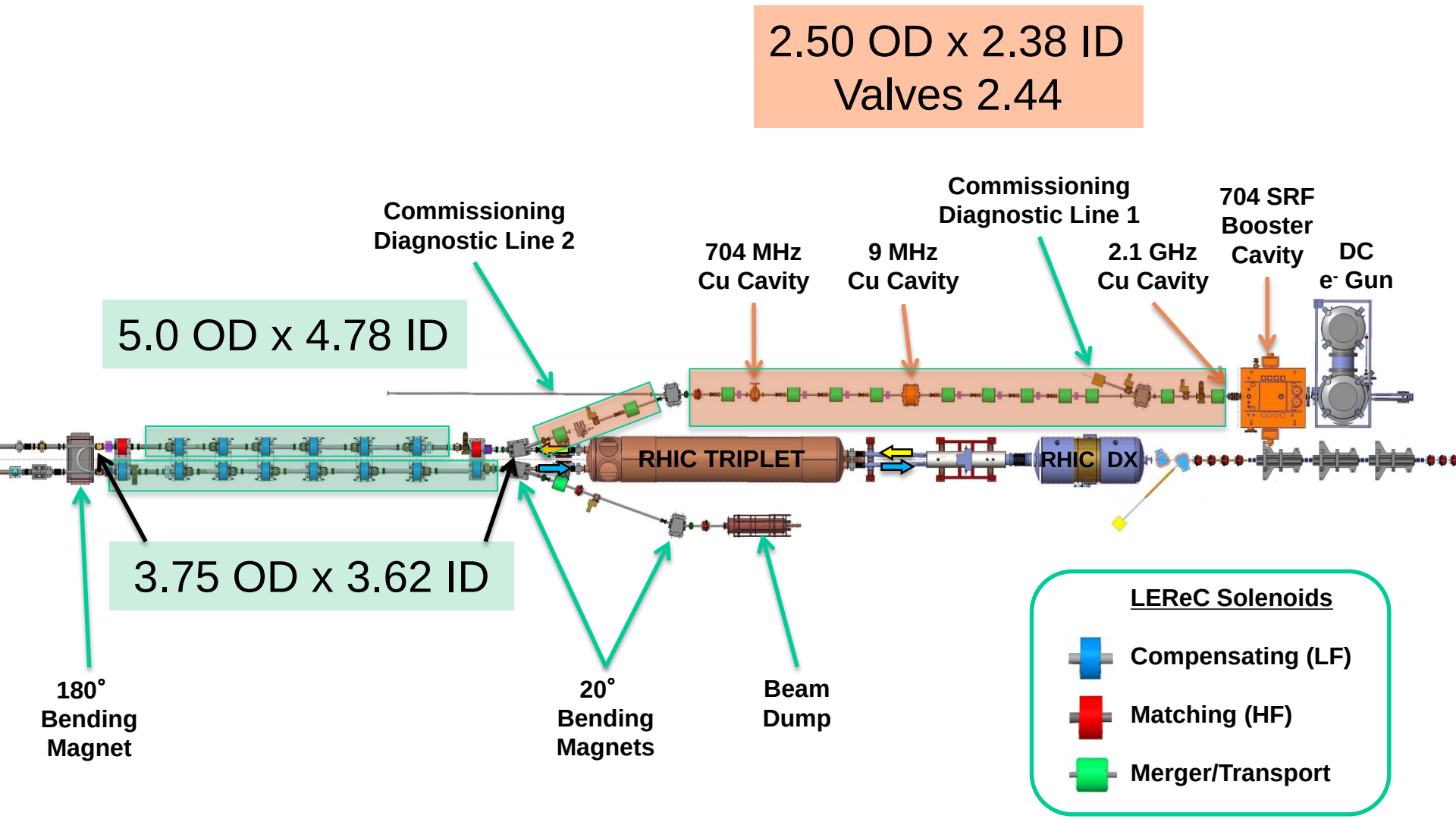

Cooling Section Installation

1. **Install stands**
2. **Survey transport line location for magnetic measurements.**
3. **Modify and install solenoids**
4. **Survey solenoids**
5. Install 20 magnet stands
6. Install beam tubes – weld flanges
7. Install BPM's, leak checked – status pre-survey, status BPM support frame
8. Install Bellows

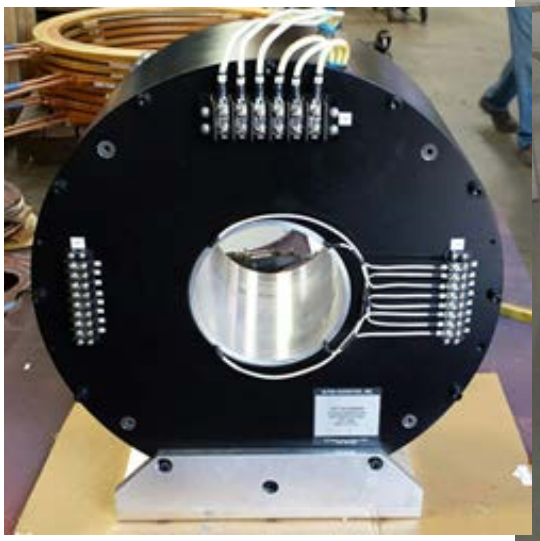

Cooling Section Solenoid Sort

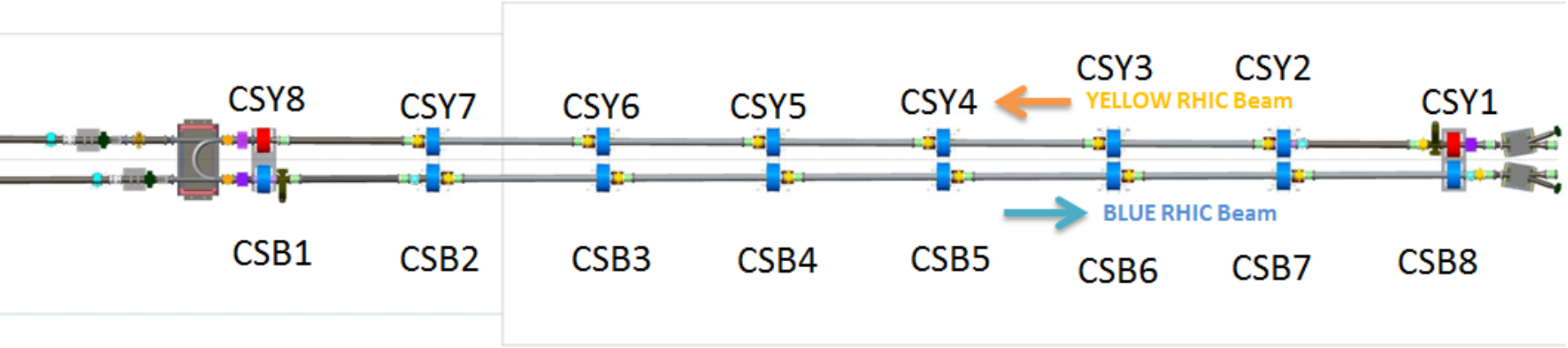

Summary of On-axis measurements in all the LEReC Solenoids (Hall + Mole Measurements)

Hall probe data at full field (Main coil = 14.0 A; Bucking coils = 14.8 A)

Mean=	13.9953	14.8152	0.0000	0.0000	-2.7378E-03	3.9969E-05	-2.0401E-02	134.188	3.39	-1.9639E-04	0.5175	0.5171	-0.4513	0.0079	0.1024	0.5568	-10.6517	10.5733	-0.5252	-2.8219
Std.Dev=	0.0224	0.0409	0.0000	0.0000	6.6906E-05	1.8832E-06	3.9929E-04	0.881	0.22	5.4109E-06	0.6710	0.5659	0.5180	0.5837	0.2988	0.2537	0.0422	0.0452	1.5124	1.2808
Min=	13.9492	14.7922	0.0000	0.0000	-2.7878E-03	3.5624E-05	-2.0678E-02	131.614	3.02	-2.0115E-04	-0.6189	-0.2371	-1.2824	-1.1828	-0.3950	-0.0535	-10.7596	10.4959	-3.1125	-5.3034
Max =	14.0071	14.9093	0.0000	0.0001	-2.5939E-03	4.1149E-05	-1.9482E-02	135.005	3.63	-1.8512E-04	1.3174	1.6365	0.4008	0.5818	0.6213	1.0535	-10.6051	10.6527	1.9885	0.2873
StdDev (%)=	0.16%	0.28%			2.44%	4.71%	1.96%	0.66%	6.39%	2.76%	129.67%	109.44%	114.78%	7401.95%	291.75%	45.55%	0.40%	0.43%	287.95%	45.39%
Ncount=	15	15	15	15	15	15	15	15	11	15	12	12	12	12	15	15	15	15	15	15

All mole data are from slopes of measured field versus current

-8.530687295 8.497057579

Repeatability seems to be ~0.2 Gauss.cm/A

		HALL PROBE DATA				HALL PROBE DATA				HALL PROBE DATA		ROTATING COIL DATA		ROTATING COIL DATA		ROTATING COIL DATA		ROTATING COIL DATA		ROTATING COIL DATA		ROTATING COIL DATA		Sum of M & B measured separately		Diff. from direct meas. in Gauss.cm/A	
	Serial number	**CurMain(A)**	**CurBuck(A)**	**X (mm)**	**Y (mm)**	**Int_Bz (T.m)**	**Int_Bz^2 (T^2.m)**	**B_z_Cntr (T)**	**L_mag (mm)**	**Hysteresis at 7.5 A (Gauss)**	**Int(B.dz)/I_Main (T.m/A) (I_Buck = 1.057*I_main)**	**MainSolenoid Int_By (Gauss.cm/A)**	**MainSolenoid Int_Bx (Gauss.cm/A)**	**BuckSolenoid Int_By (Gauss.cm/A)**	**BuckSolenoid Int_Bx (Gauss.cm/A)**	**(Main+Buck) Int_By (Gauss.cm/A)**	**(Main+Buck) Int_Bx (Gauss.cm/A)**	**VF_Corr (Gauss.cm/A)**	**HF_Corr (Gauss.cm/A)**	**Approximate Pitch (mr)**	**Approximate Yaw (mr)**	**(M+B) Int_By/I**	**(M+B) Int_Bx/I**	**Int_By/I diff.**	**Int_Bx/I diff**
CSY2	16046	14.0060	14.7957	0.0000	0.0000	-2.76750E-03	4.07788E-05	-0.020567	134.5594	3.4918	-1.98639E-04	0.784573148	1.333760715	-1.282436926	-1.182774552	-0.394987517	0.385622526	-10.60924802	10.57950234	1.99	-1.94	-0.497863778	0.150986163	0.10	0.23
CSB8(test bench)	16047	13.9535	14.8734	0.0000	0.0000	-2.60195E-03	3.57779E-05	-0.019500	133.4315		-1.86317E-04					0.4445009	-0.053529574	-10.63542739	10.58263766	-2.39	0.29				
spare (test bench)	16048	13.9532	14.9093	0.0000	0.0001	-2.59386E-03	3.56240E-05	-0.019482	133.1381		-1.85122E-04					0.108963236	0.615566302	-10.66983501	10.61990953	-0.59	-3.33				
CSB7	16049	13.9492	14.8961	0.0000	0.0000	-2.63668E-03	3.80927E-05	-0.020033	131.6141		-1.86717E-04	-0.229605725	-0.237105329	0.031566208	0.359546618	0.022897932	0.363955478	-10.72162042	10.58808489	-0.12	-1.95	-0.198039517	0.122441288	0.22	0.24
CSB3	16050	14.0071	14.7959	0.0000	0.0000	-2.76666E-03	4.06032E-05	-0.020499	134.9646	3.2053	-1.98466E-04	1.317412486	1.636513698	-1.095760318	-0.998883	0.243583385	0.689951607	-10.66335912	10.62132197	-1.23	-3.48	0.221652168	0.637630698	0.02	0.05
CSB4	16051	14.0045	14.7929	0.0000	0.0000	-2.78617E-03	4.11298E-05	-0.020638	135.0046		-1.99622E-04					0.621319288	0.484002586	-10.75964931	10.65267103	-3.11	-2.42				
CSB5	16052	14.0063	14.7922	0.0000	0.0000	-2.75102E-03	4.03972E-05	-0.020486	134.2855	3.3671	-1.97819E-04	0.303287833	0.731389809	-0.187061216	-0.114852045	0.030236079	0.784886497	-10.60659275	10.50131429	-0.15	-3.97	0.116226617	0.616537764	-0.09	0.17
CSB6	16053	14.0061	14.7931	0.0000	0.0000	-2.78783E-03	4.11487E-05	-0.020678	134.8236	3.0241	-2.01147E-04	1.219115161	0.161285755	-0.643735692	0.211951873	0.447742109	0.538432832	-10.6484848	10.62239486	-2.23	-2.68	0.575379468	0.373237628	-0.13	0.17
CSY3	16054	14.0071	14.7979	0.0000	0.0000	-2.76890E-03	4.09683E-05	-0.020621	134.2771	3.6262	-1.99318E-04	1.08446541	0.663206469	-0.929755001	0.102985607	0.151161287	0.478063481	-10.63486487	10.54852197	-0.76	-2.40	0.154710408	0.766192076	0.00	-0.29
CSY4	16055	14.0053	14.7969	0.0000	0.0000	-2.76387E-03	4.06396E-05	-0.020522	134.6764	3.0156	-1.98977E-04	0.012903312	0.071441288	0.00667573	0.129214467	-0.10277853	0.3084882	-10.6687472	10.57037438	0.52	-1.55	0.019579043	0.200655755	-0.12	0.11
CSY5	16056	14.0068	14.7966	0.0000	0.0000	-2.76454E-03	4.07805E-05	-0.020571	134.3931	3.3877	-1.98371E-04	-0.618878581	0.188202463	0.400807796	0.438963981	-0.282233739	0.676435135	-10.63116381	10.53266024	1.42	-3.41	-0.218070785	0.627166444	-0.06	0.05
CSY6	16057	14.0055	14.7967	0.0000	0.0000	-2.76838E-03	4.10434E-05	-0.020653	134.0438	3.4662	-1.98741E-04	0.21006315	0.9584661	-0.126378585	-0.387566391	-0.03727851	0.592303452	-10.62924373	10.49589849	0.19	-2.98	0.083684565	0.570899709	-0.12	0.02
CSY7	16058	14.0062	14.7964	0.0000	0.0000	-2.76377E-03	4.07671E-05	-0.020575	134.3278	3.5346	-1.98654E-04	1.157121355	0.097051238	-0.711591815	0.489089757	0.244283263	0.741976192	-10.60507039	10.57205558	-1.23	-3.74	0.445529541	0.586140995	-0.20	0.16
CSB1	16059	14.0055	14.7996	0.0000	0.0000	-2.76541E-03	4.06703E-05	-0.020543	134.6141	3.5962	-1.98654E-04	-0.136717431	0.484334805	-0.150063646	0.465143277	-0.312082984	1.053538743	-10.65097889	10.57862903	1.57	-5.30	-0.286781076	0.949478082	-0.03	0.10
CSB2	16060	14.0068	14.7945	0.0000	0.0000	-2.78031E-03	4.11152E-05	-0.020645	134.6737	3.5476	-1.99292E-04	1.106331098	0.116169124	-0.727824164	0.5818079	0.351036245	0.692964125	-10.64171313	10.53318955	-1.76	-3.48	0.378506934	0.697977024	-0.03	-0.01

Cooling Section Installation

- Beamline shielded bellows
- BPM mounting shops parts and hardware.
- Standard Profile Monitor (2) and Emittance Slit (2) vacuum chambers
- Special RF vacuum gaskets, nuts, and bolts
- BPM modified RF gaskets

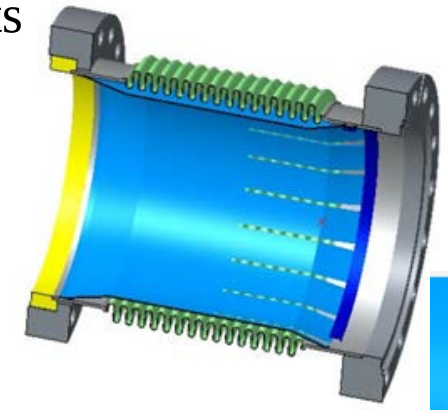

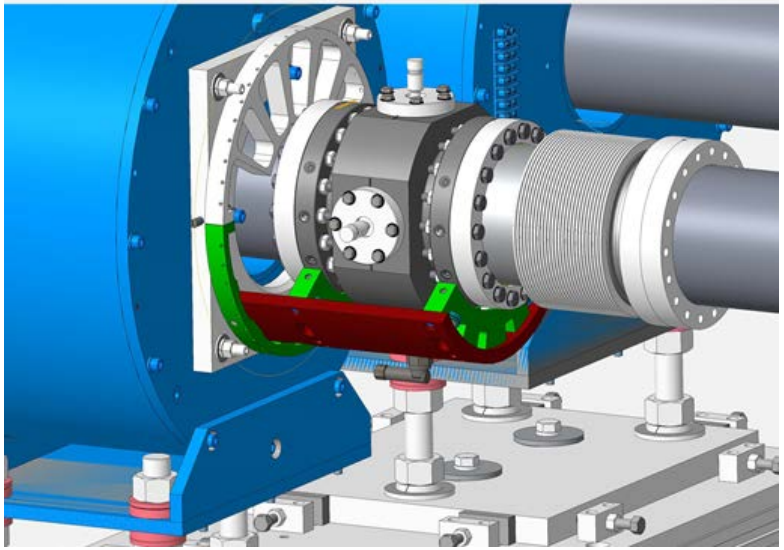

Installation Planing

Install yellow side beam line

- 6 LF solenoids and 2 HF solenoids measured and accepted.
- 7 BPM chambers/supports, 1 emittance slit,
- 20o Y chamber, 2 – HF solenoid chambers, long 180° temporary chamber, bellows.

Install blue side beam line

- 8 LF solenoids measured and accepted.
- 7 BPM chambers/supports, 1 - emittance slit, 1 – Profile Monitor
- 20° Y chamber, 180° temporary chamber, bellows

180º Dipole Magnet Neighborhood 2015

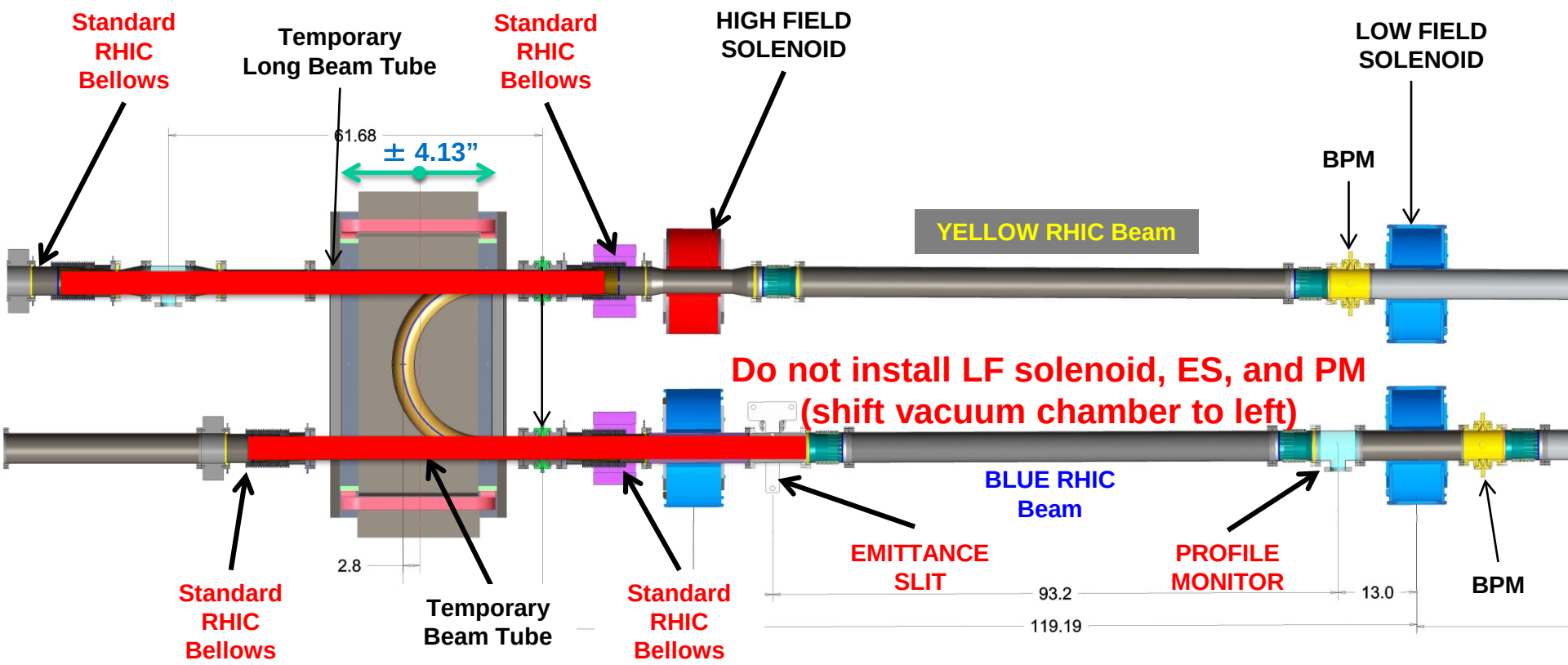

Yellow Side Need:

Temporary long beam line chamber, special solenoid/ES support stand, (RHIC bellows)

Blue Side Need:

Temporary beam line chamber, special solenoid/ES support stand, (RHIC bellows) Remove Profile Monitor and Emittance SLIT Chambers

Installation Q3 Side

Yellow Side Need:
emittance slit assembly, special solenoid chamber, 20o chamber, 20o stand, special solenoid/slit support stand
Blue Side Need:
Standard profile monitor assembly, 20o chamber, 20o stand, special solenoid/PM support stand

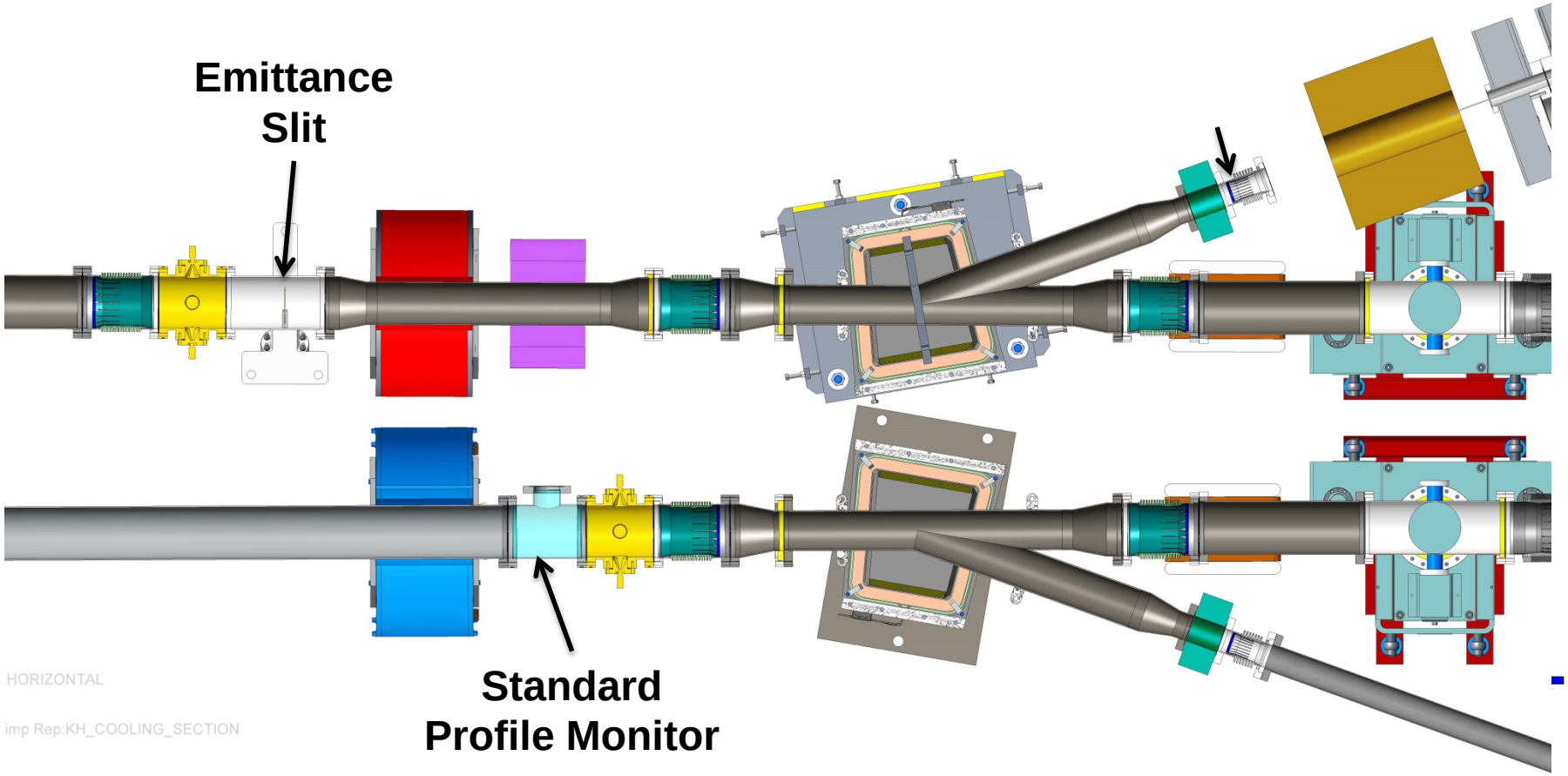

Cooling Section 2016 Installation

Standard Profile Monitor Assemblies (3)

(Hold 1 chamber for drive testing)

180o Magnet Assembly

- Magnet (magnetic measured)
- Hybrid PM/ES/BPM Assemblies (2)
- Vacuum chamber (measured)
- Magnetic field monitoring (characterized)
- Stand (non-moving)
- Bellows assemblies

Emittance Slit Assemblies (3)

(Hold 1 chamber for drive testing)

Magnet shielding test assembly

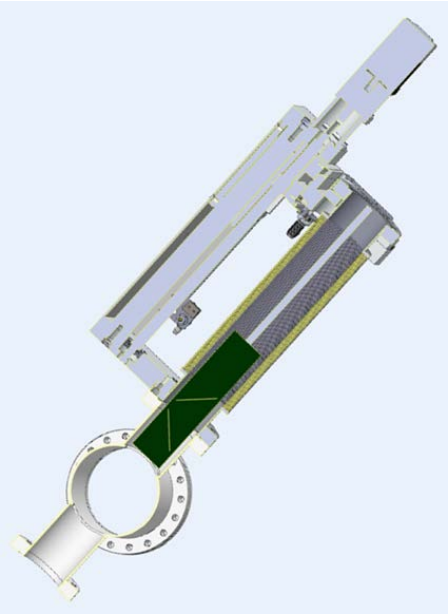

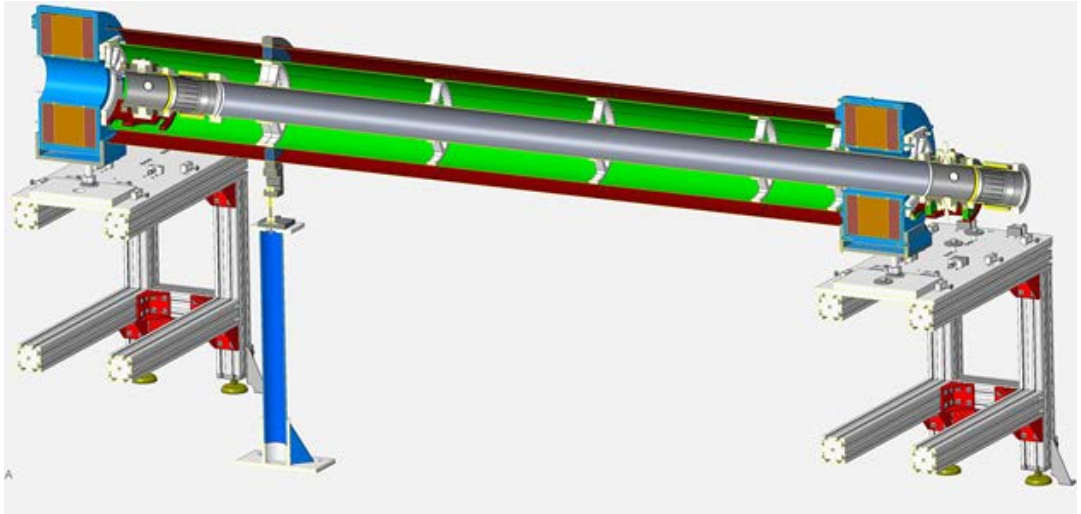

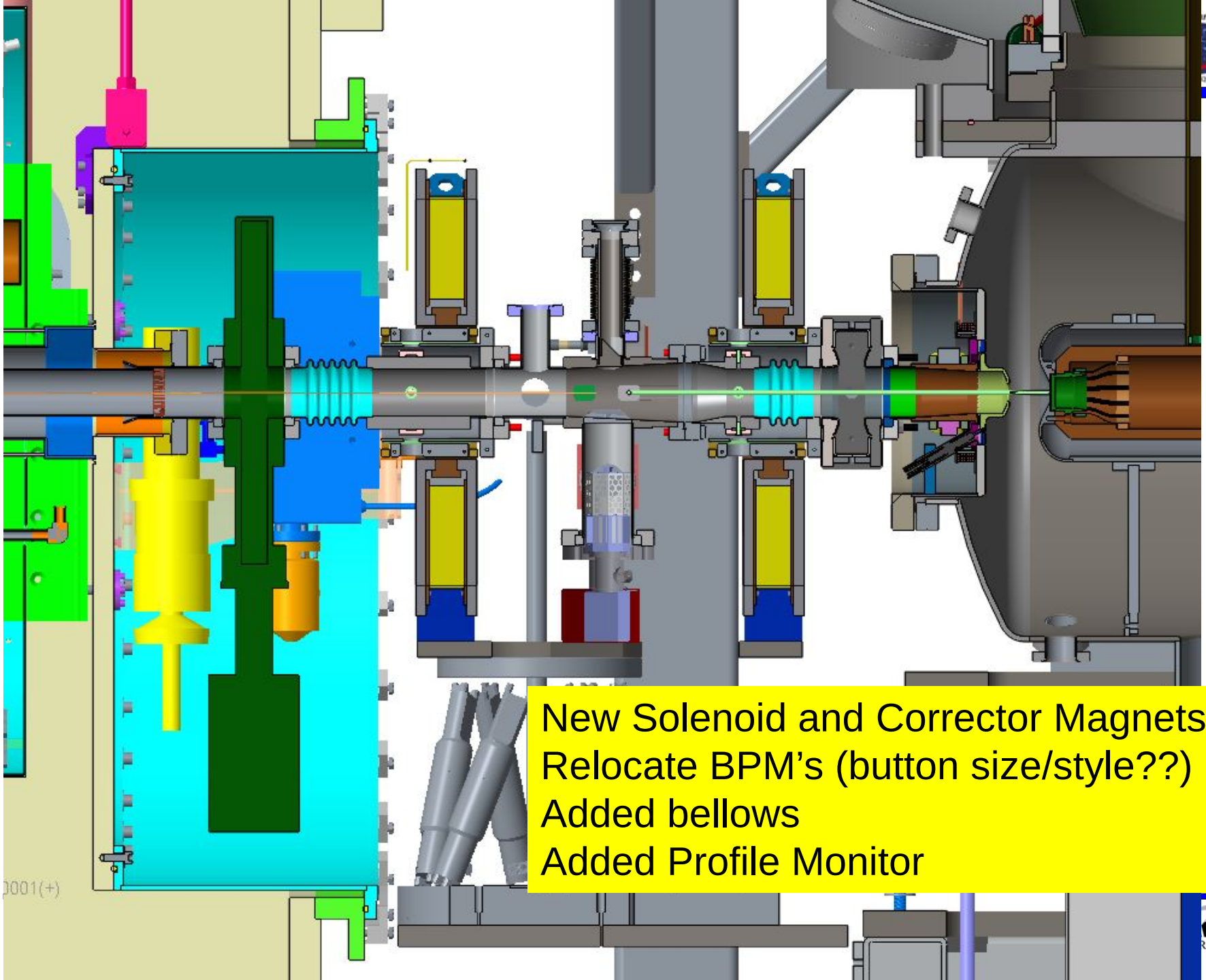

New Solenoid and Corrector Magnets
Relocate BPM's (button size/style??)
Added bellows
Added Profile Monitor

12/15 Revised Transport Solenoid

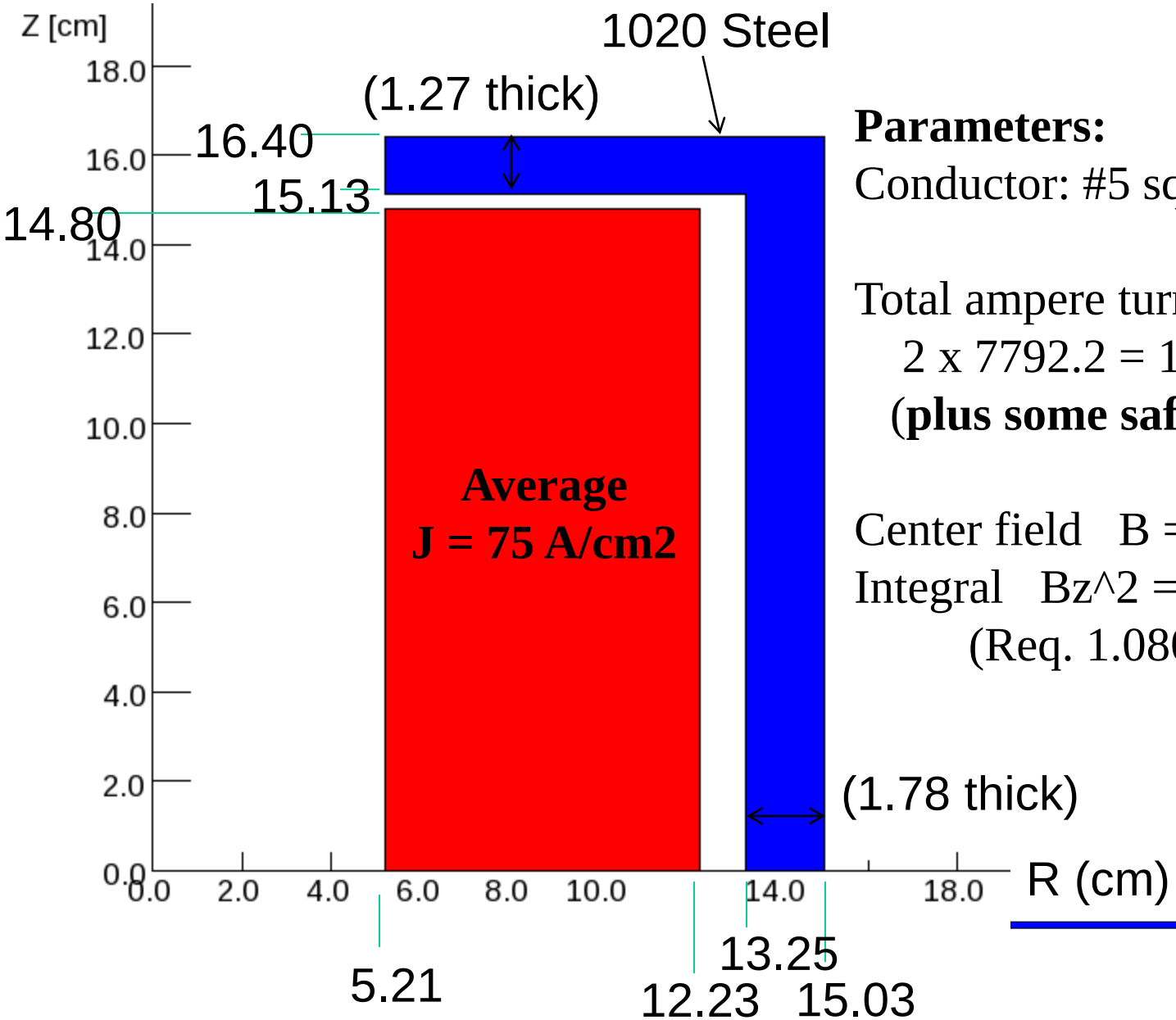

Parameters:

Conductor: #5 square, solid wire

Total ampere turn:

2 x 7792.2 = 15,584.4 AT

(**plus some safety margin**)

Center field B = 647.3 Gauss

Integral Bz^2 = 1.081E7 G^2-cm

(Req. 1.080E7 G^2-cm)

12/15 Revised Transport Solenoid

840 Turns, #5 square copper conductor.

18.6 A, 7.2 V, 0.39 Ohms

Will use for both Merger and Transport Solenoids

Magnets designed for 2.5” pipe.

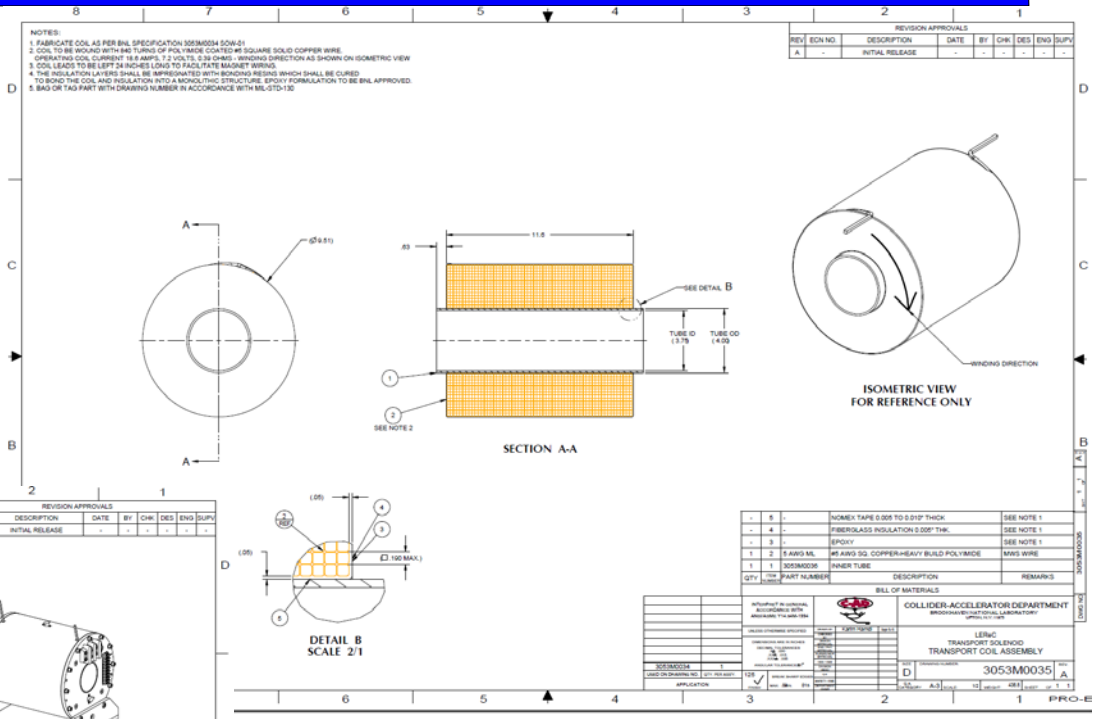

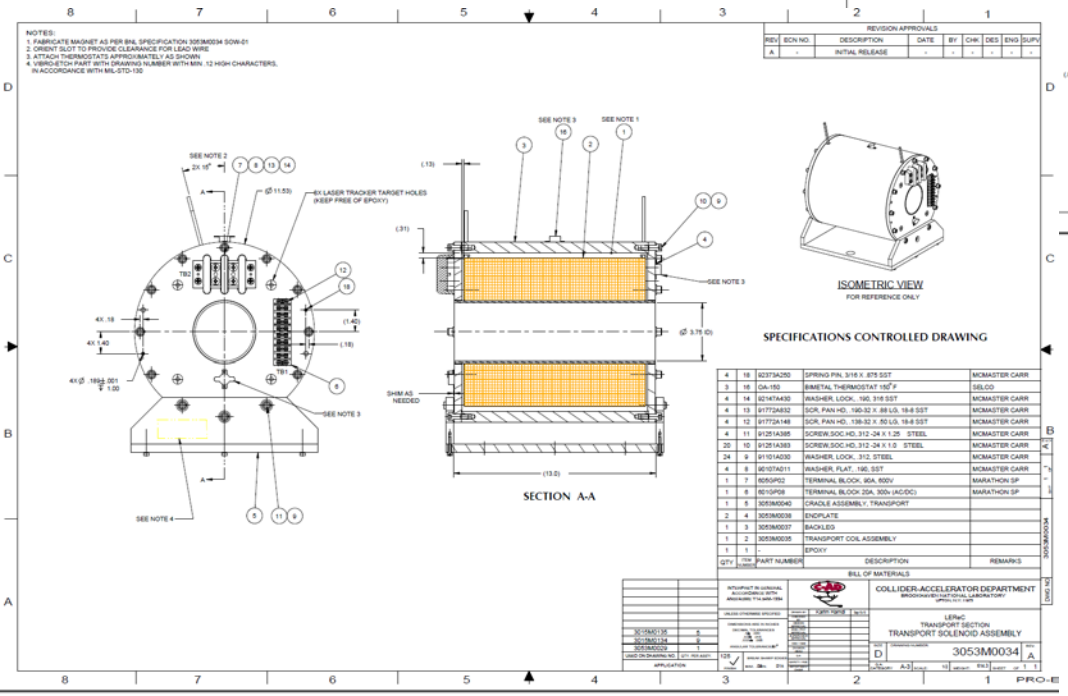

Need 13, will this number be changed? when

Diagnostic line solenoid – same spec’s?

- 647 Gauss Merger solenoids?
- 647 Gauss Transport solenoids?

12/15 Revised Transport Solenoid

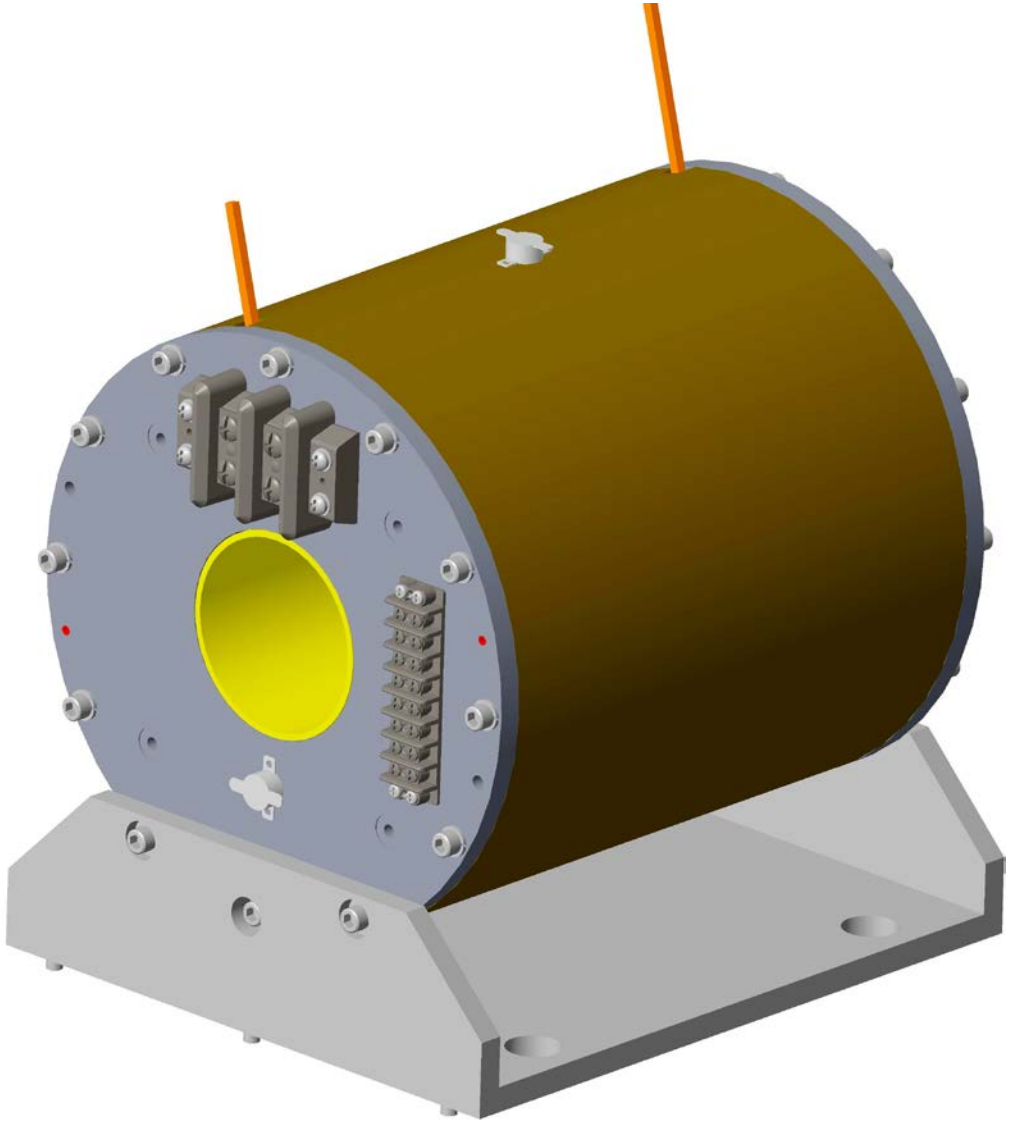

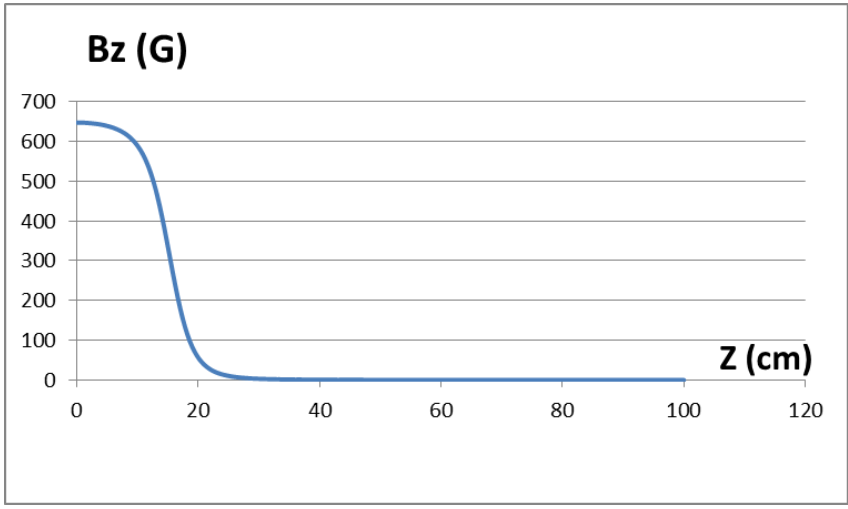

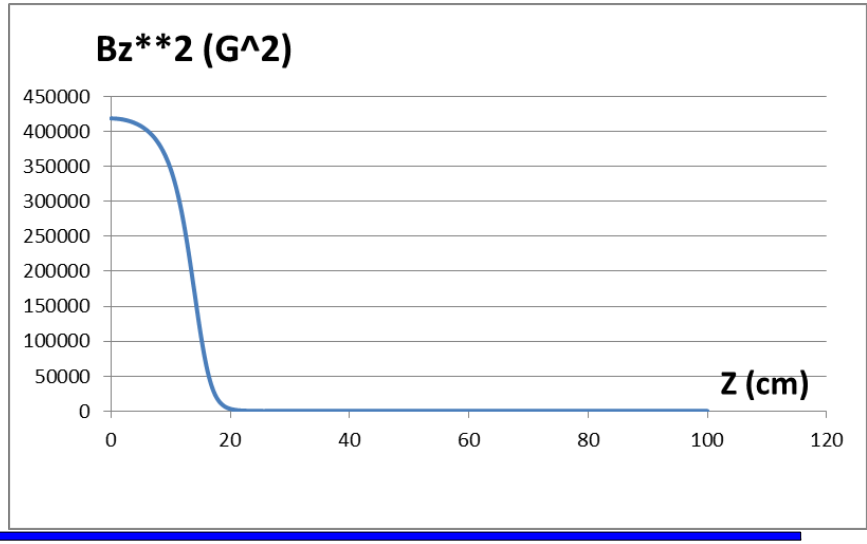

2.1 GHz Cavity

- **Cavity fabrication contract awarded**
- **Windows ordered**
- **Frequency change and tuner section redesign complete**
- **ECN, revised drawings being checked**
- **Aluminum test cavity being prepared**
- **Test tuner parts being fabricated**
- Vacuum wave guide design

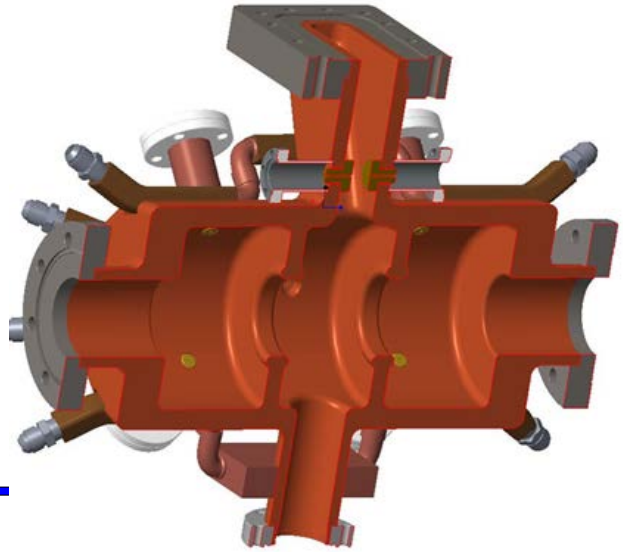

704 MHz Cavity

Cavity fabrication requisition prepared

Drawing revision for frequency change

Revised drawings being checked

Tuner design

Window design

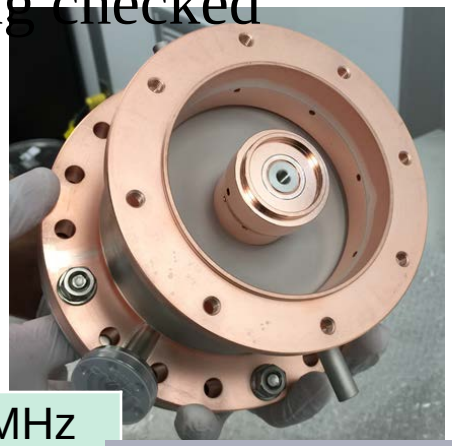

Frequency	703.6 MHz
No. of cells	1
R_{sh}	5.0 MOhm
R/Q_{acc}	178 Ohm
Cavity voltage	430 kV
Required RF power	37.0 kW
Installed RF power	50 kW

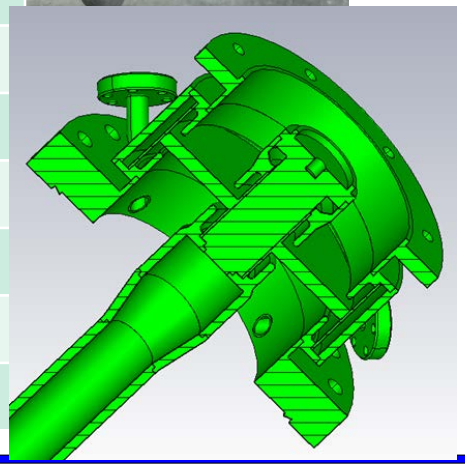

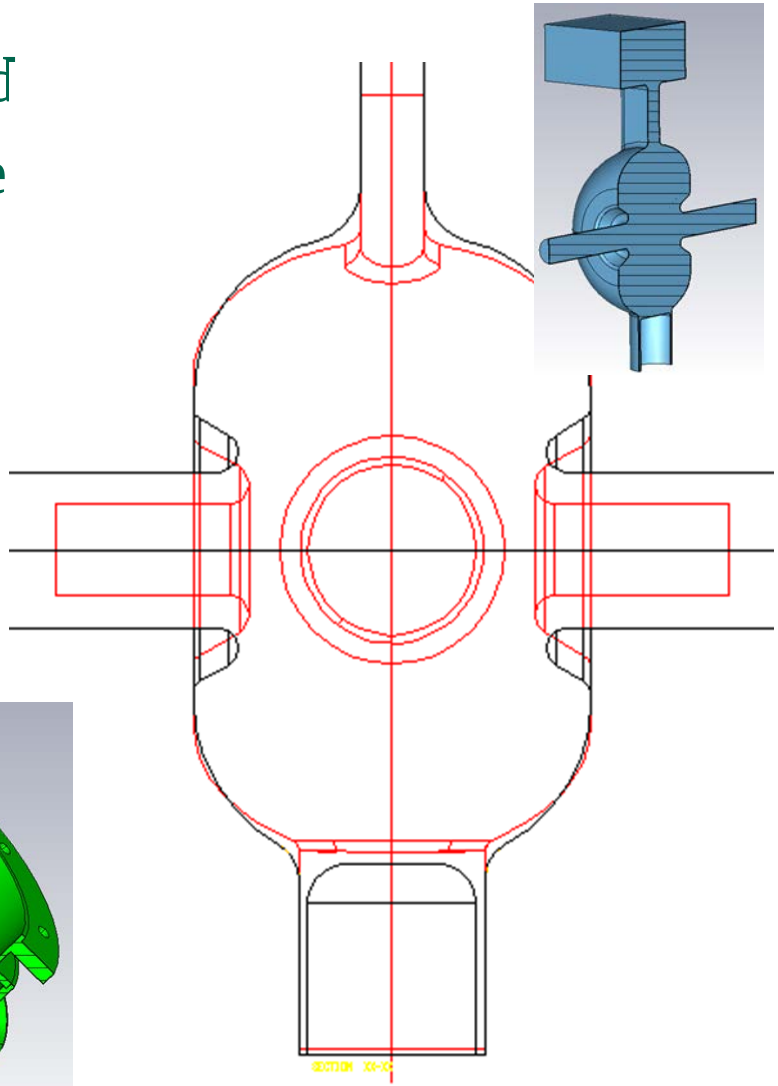

LEReC Cooling Section Design Room

LF & HF solenoid and 20° dipole magnets fabrication drawings (KH)

Beam Diagnostics: BPM chamber and buttons (VDM)

Beam Line 5” bellows with shields fabrication drawings (GW)

20° dipole vacuum chamber for impedence review (KH)

180° dipole fabrication drawings (KH) Spectrometer magnet (180° dipole) revisions (KH)

180° vacuum chamber + large sliding bellows fabrication drawing (KH)

Beam Diagnostics ES W slit & chamber fabrication drawings (VDM)

20° dipole vacuum chamber fabrication drawings (KH)

Cable tray and penetration drawings and excel sheet (AF)

Beam Diagnostics: PM vacuum chamber fabrication drawings (GW)

Beam Diagnostics: standard PM fabrication drawings (GW)

Beam Diagnostics: special “hybrid” ES/PM/BPM fabrication drawings (GW)

Beam line solenoid/BPM stands & vacuum chamber stand (VDM)

20° magnet stand drawing (KH)

180° magnet w/hybrid assembly BPM stand drawings (KH) on hold

Magnetic shielding drawing and solenoid magnetic measurement test station (VDM) *on hold*

In tunnel, magnetic measurement “mole” for stray field studies

HF dipole, quadrupole, and skew quadrupole corrector drawings

LEReC Design Room Source Design Work

DC Gun Vacuum Chamber Fabrication Drawings (JH)

DC Gun SF6 Pressure chamber specification control drawings (JH)

DC Gun cathode cooling design for Karl S. Cornell (JH)

DC Gun stands (JH)

DC Gun to SRF booster cavity beam line (JH)

DC Gun to SRF booster cavity laser port, view port, profile monitor (JH)

DC Gun to SRF booster cavity solenoid/corrector magnets (JH)

DC Gun to SRF booster cavity BPM's

DC Gun cathode insertion drive assembly

ERL Gun to Booster Cavity Modifications: U/S cathode to beam tube, FPC, D/S beamline & HOM (SS, JH)

Cathode coating system cathode bakeout vacuum chamber & heater (KH & BM)

Cathode coating system deposition vacuum chamber w/internal cathode transport system (KH)

Cathode coating system transport vacuum chamber – *ferris wheel* (KH & WJ)

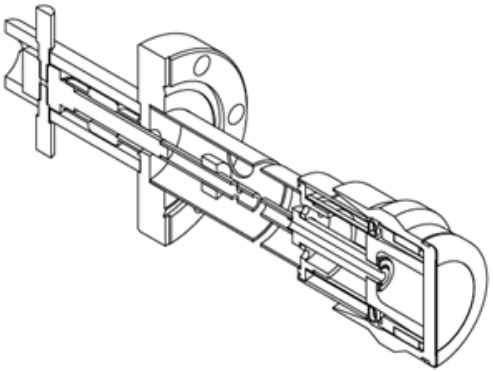

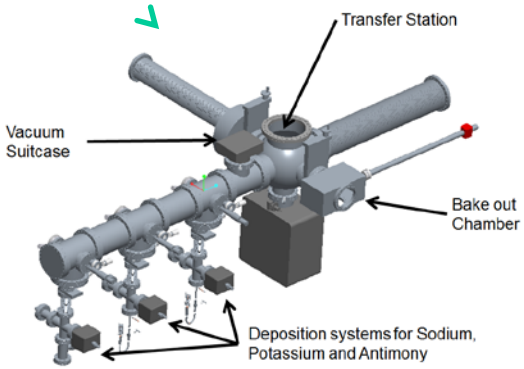

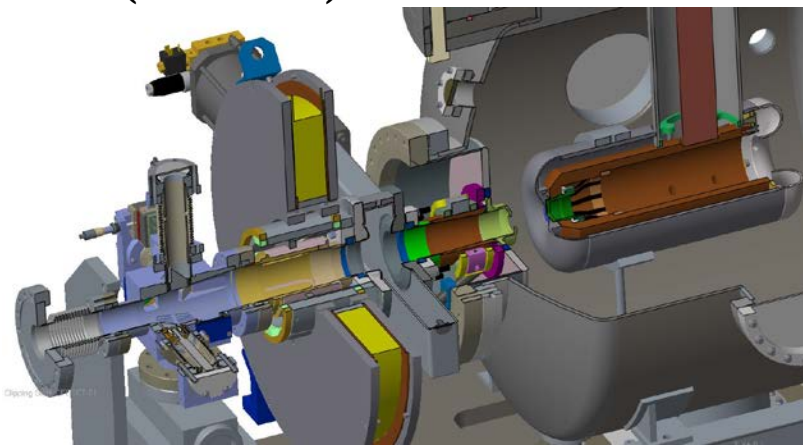

LEReC Design Room Other Work

RHIC 1:00 move real estate drawings (V.DM.)

Cryogenic system layout (RM)

2.1 GHz warm cavity spec. control drawings (MG)

2.1 GHz warm cavity tuner, wave guide, and warm test model (MG)

704 MHz warm cavity spec. control drawings (SP)

Transport & Merger line layout (RM, KH)

Locate booster cavity, solenoids, BPM's, RF Cavities, PM's, Diagnostic Lines

Transport & Merger Line Solenoids (KH)

Transport Line Solenoid Stands

Transport & Merger Line Bellows and Pump Ports (GW)

Transport & Merger Line CT's (GW)

Transport & Merger Line BPM's (GW)

Transport & Merger Line Correctors

Transport & Merger Line Profile Monitors

Merger Line Flying Wire

Diagnostic Beam Lines and Components

Kickers, RF cavity, beam dump,

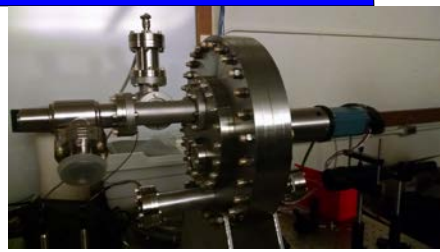

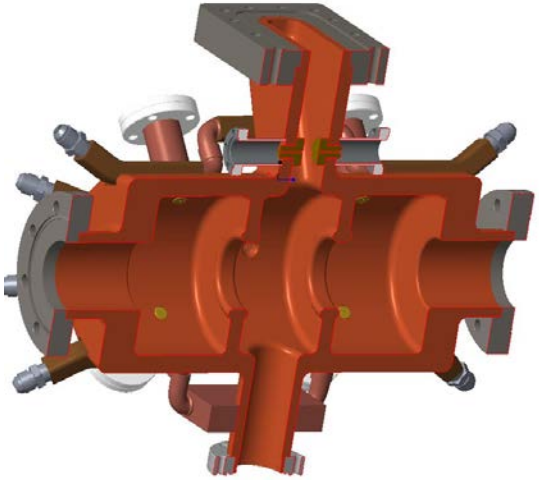

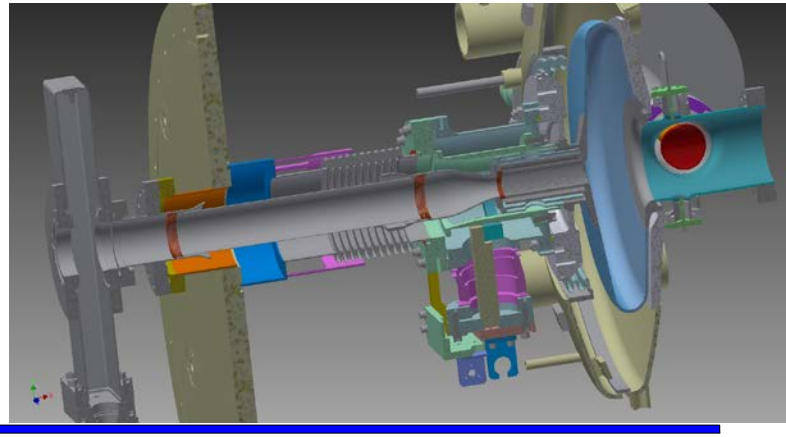

180º Dipole Magnet Neighborhood 2016

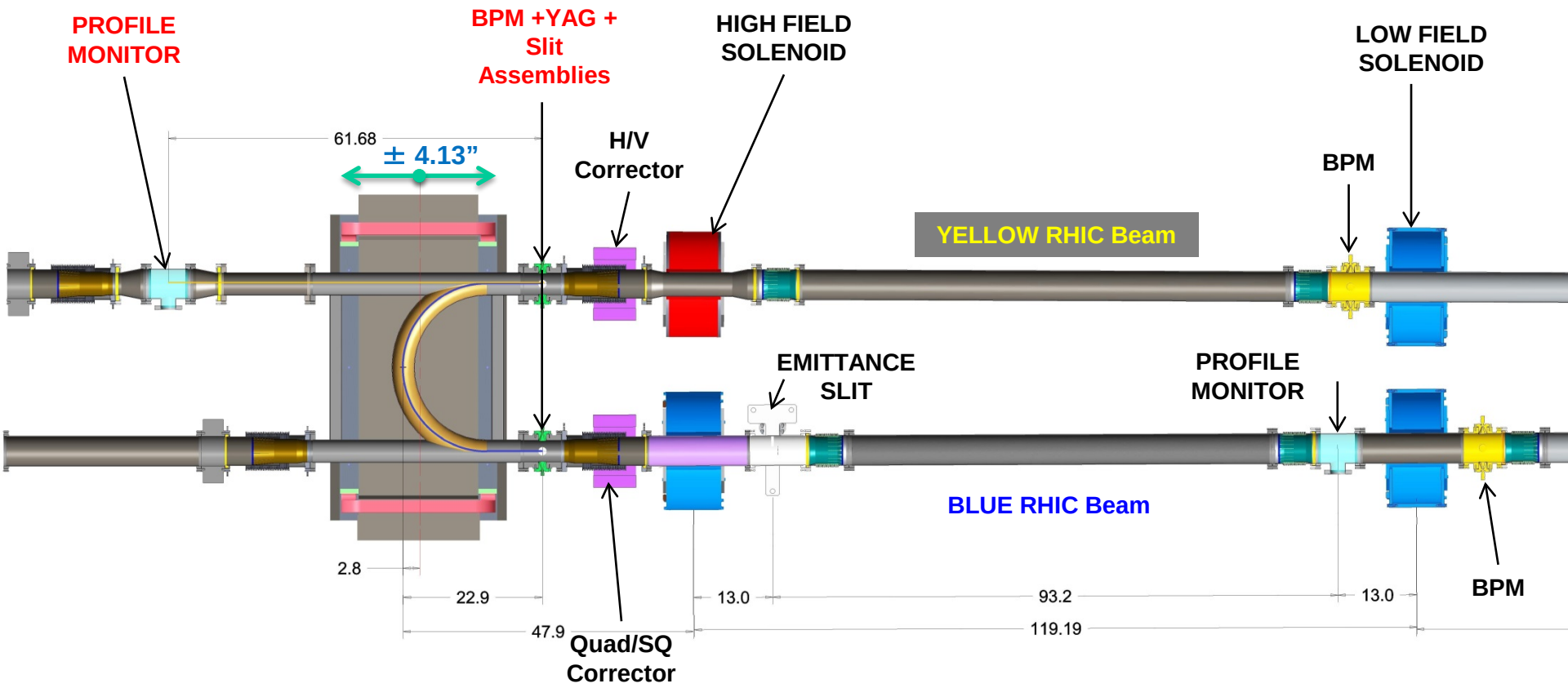

kh

COOLING Section Solenoids

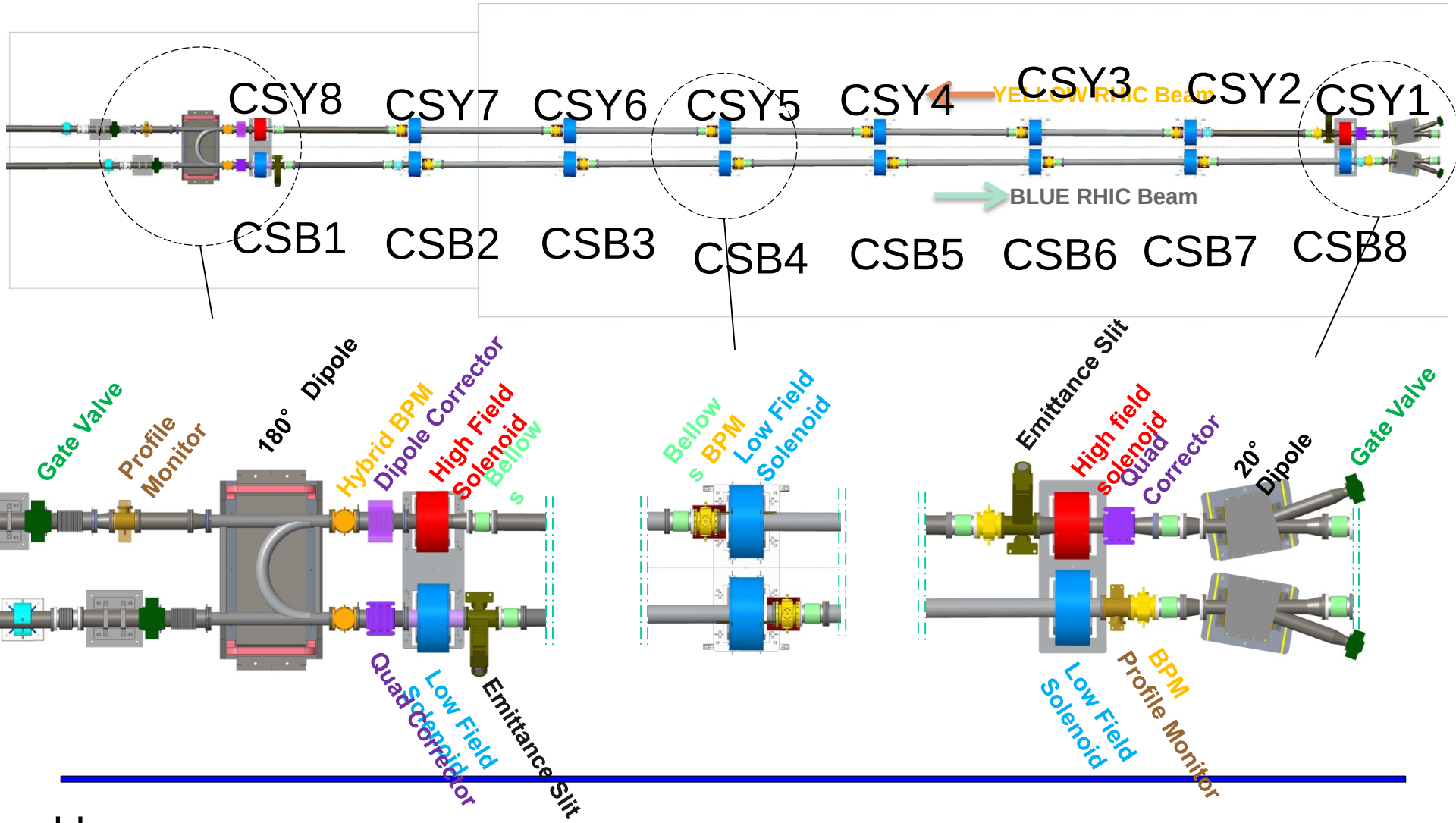

kh

9/16/15
Phase 1 Block 7.vsd

Gun Section

1. Two p.s's for stand alone Corr 24H & 24V. Need V & I. Using Cornell Corr V & I for estimate.

2. Three Solenoid magnets after the Gun (GS1-GS3). Need V & I. Using Cornell Sol V & I for estimate.

3. GS2 has Corr 25H and 25V built into it. No P.S. set aside yet Need Magnet V & I.

4. GS3 has Corr 26H and 26V built into it. No P.S. Set aside yet. Need Magnet V & I.

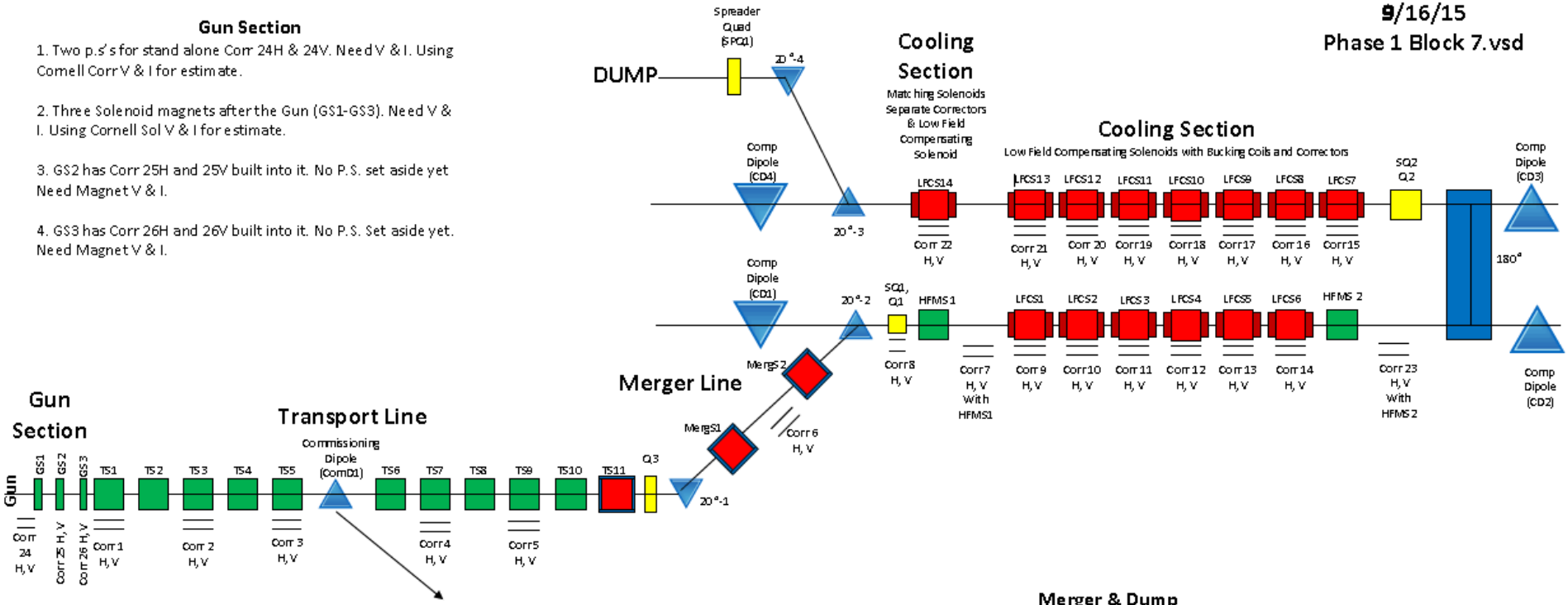

Transport Line

1. 11 p.s's for 11 Sol magnets (TS1-11) . Need V & I, For now using 11-250V 50A GEN ps's. Need V & I. TS1-10 are 500G. TS11=1.1kG.

2. 10 Corr p.s.'s for only 5 Corrector (Corr1-5) magnets. Need V & I, For now using ten ERL 15V 10A SHIM p.s.'s. Do we need more than 5 Corr magnets? Are they in the correct location?

3. 1 p.s. for one Commissioning Dipole (ComD1). Need V & I, For now using ERL extraction dipole with ERL ps which is Kepco BOP GL 50V 20A

4. 1 p.s. for one Quad, Q3, Use ERL 15V 10A SHIM ps, taking quad from ERL.

Notes
1. Don't forget we need FWD's and for kepcos we might need blocking diode to make it unipolar, however this may not be true because we may want kepcos to work bipolar to get rid of remnant field
2. Tell Bob V about new 30V 25A ps's we added because LFCS14 is running as a single magnet and update D Phillips racks.
3. I really need V & I for TS1-11 and MergS1-S2.
4. TS2 & TS5 are replaced by 2 chicanes (zig zags) for Phase II.

Merger & Dump

1. 2 p.s.'s needed for two 1.1kG Solenoid Magnets (MergS1-2). I~20A?, V is ~146.8V? I don't know what I should be for 1.1kG. Use 200V 50A Gen ps
2. 2 p.s.'s needed for one Corrector magnet (Corr 6). Need V & I, For now using 2 ERL 15V 10A SHIM p.s.'s.
3. 1 p.s., ERL Kepco BOP GL 50V 20A for four 20° magnets in series. 20°-1&2 in Merger Section. 20°-3&4 in dump section.

Cooling Section

1. 1 p.s. 150V 22A for LFCSc1-6 cores 6 in series
2. 1 p.s. 150V 22A for LFCSbc1-6 buck coils (2x) 6 in series
3. 28 p.s.'s 20V 2A BIRA MCOR for Correctors, Corr 9-22 with LFCS magnets.
4. 1 p.s. 150V 22A for LFCSc7-13 cores 7 in series
5. 1 p.s. 150V 22A for LFCSbc7-13 buck coils (2x) 7 in series
6. 1 p.s. 30V 25A for LFCSc14 core single
7. 1 p.s. 30V 25A for LFCSbc14 buck coils 2 in series from one magnet
8. 1 180° p.s. +/-30ppm? Need to sit down with Alexei, Bob about specs, have 3 options, 39.3V, 7.8A
9. 2 p.s.'s 30V 25A for High Field Matching Solenoids (HFMS1-2)
10. 4 p.s.'s for HFMS Correctors (Corr 7 & 23), need real Mag V & I. For now using ERL 15V 10A SHIMS
11. 1 p.s. for Compensating Dipoles (CD1-4). All 4 in series. Use one kepco 50V 20A p.s.
12. 1 p.s. for Skew Quad (SQ1) V & I needed, 1 p.s. for Quad (Q1) V & I needed, 2 ps's for Corr 8 (V&I needed)
13. 1 p.s. for Skew Quad (SQ2) V & I needed, 1 p.s. for Quad (Q2) V & I needed

Dump

1. 1 p.s. needed for one Spreader Quad Magnet (SPQ1), No V & I, told to use ERL 15V 10A SHIM p.s.

Diagnostics: Transport

Parameter	Instrument
Position	BPM System
Profile	YAG Profile Monitors (PM)

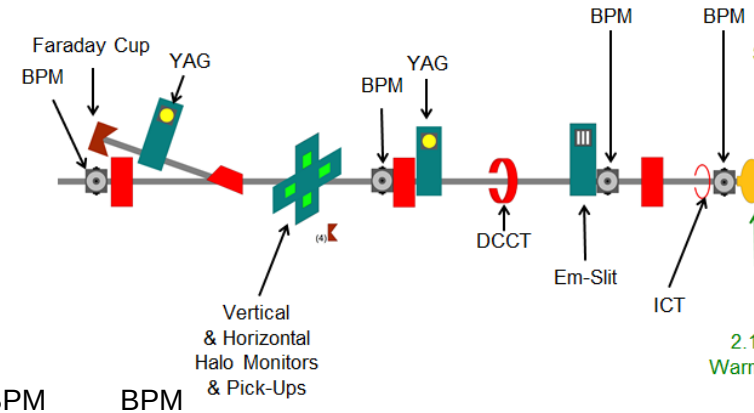

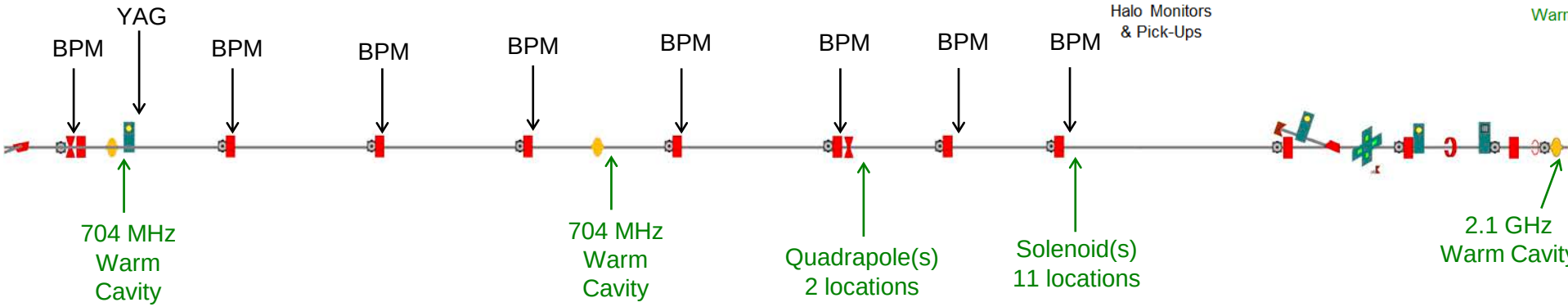

e-Beam Transport

BPM = 8

YAG = 1

Beam pipe size 2.38 ID does not match ERL
Bake-out to near RHIC and near Booster Cavity??
ERL Buttons for BPM's OK??
Profile Monitor drives from ERL, vacuum chamber?
ERL emittance slit drive
Commissioning line dipole angle
2nd 2.1 GHz cavity location?
Another 20o dipole?

Merger Beam Line

Parameter	Instrument
Position	BPM System
Profile	YAG & Flying Wire Profile Monitors (PM)
Energy Spread	Slit + PM in dispersive section

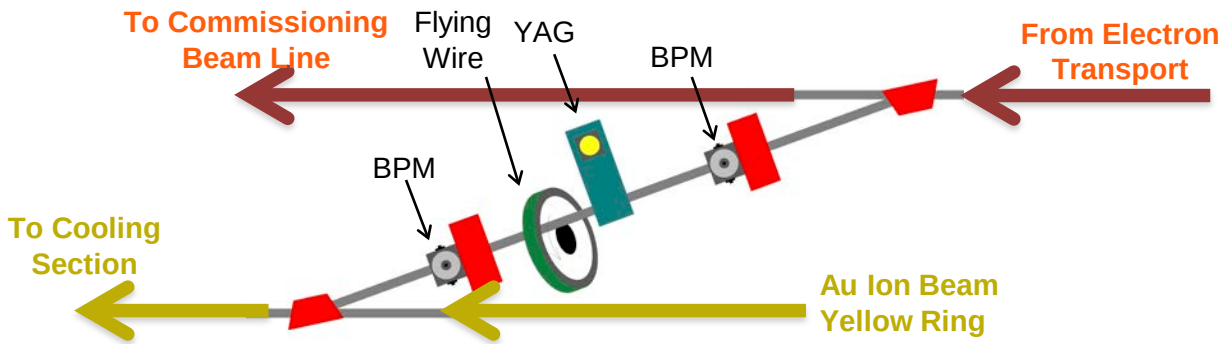

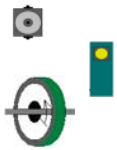

e-Beam Transport

BPM = 2

YAG = 1

Flying Wire = 1

Beam pipe size 2.38 ID does not match ERL
Bake-out to 200C?? near RHIC
Flying wire system or equivalent TBD

Commissioning Beam Line

Parameter	Instrument
Profile	YAG Profile Monitors (PM)
Absolute Energy	Electrostatic Energy Spectrometer Magnetic Energy Spectrometer
Energy Spread	Slit + PM in dispersive section
Longitudinal Phase	RF Deflecting Cavity + Dipole & PM

Beam Sampling Technique for high power single macro bunch measurements

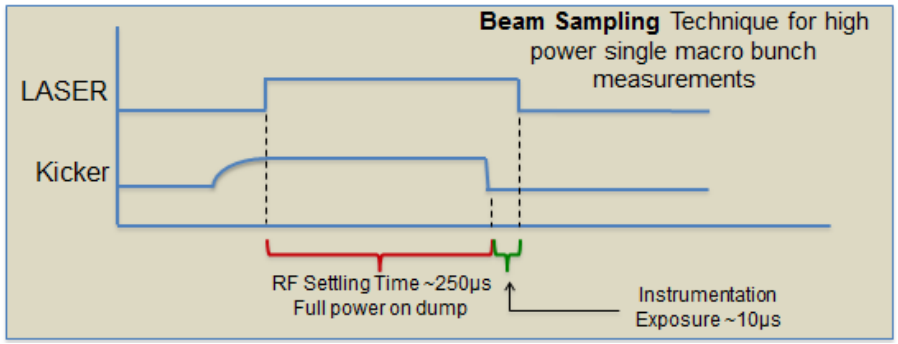

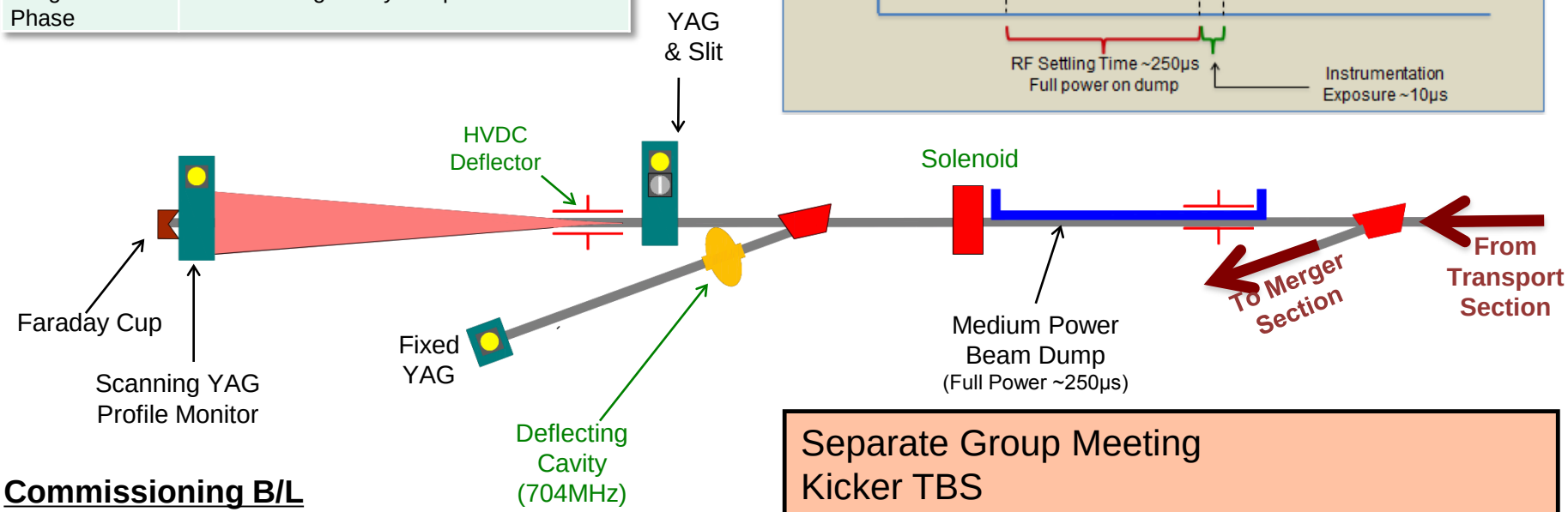

Commissioning B/L

YAG = 3

Faraday Cup = 1

Defining Slit = 1

Separate Group Meeting
Kicker TBS
Merger solenoid??
Internal beam dump TBD
Deflecting cavity design underway
HVDC deflector TBD
Another 20o dipole? TBD
Fixed and Scan YAG's dumps

Merger/Transport

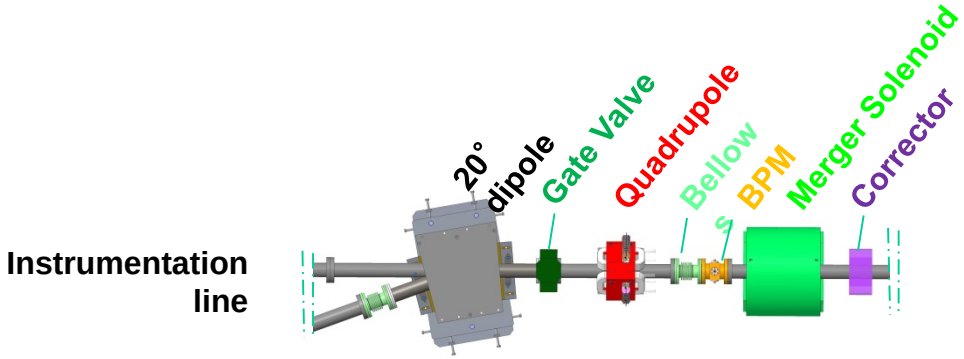

Need Quadrupole Magnet Spec's
Same as dump quadrupole?
Move gate valve down stream of 20o?

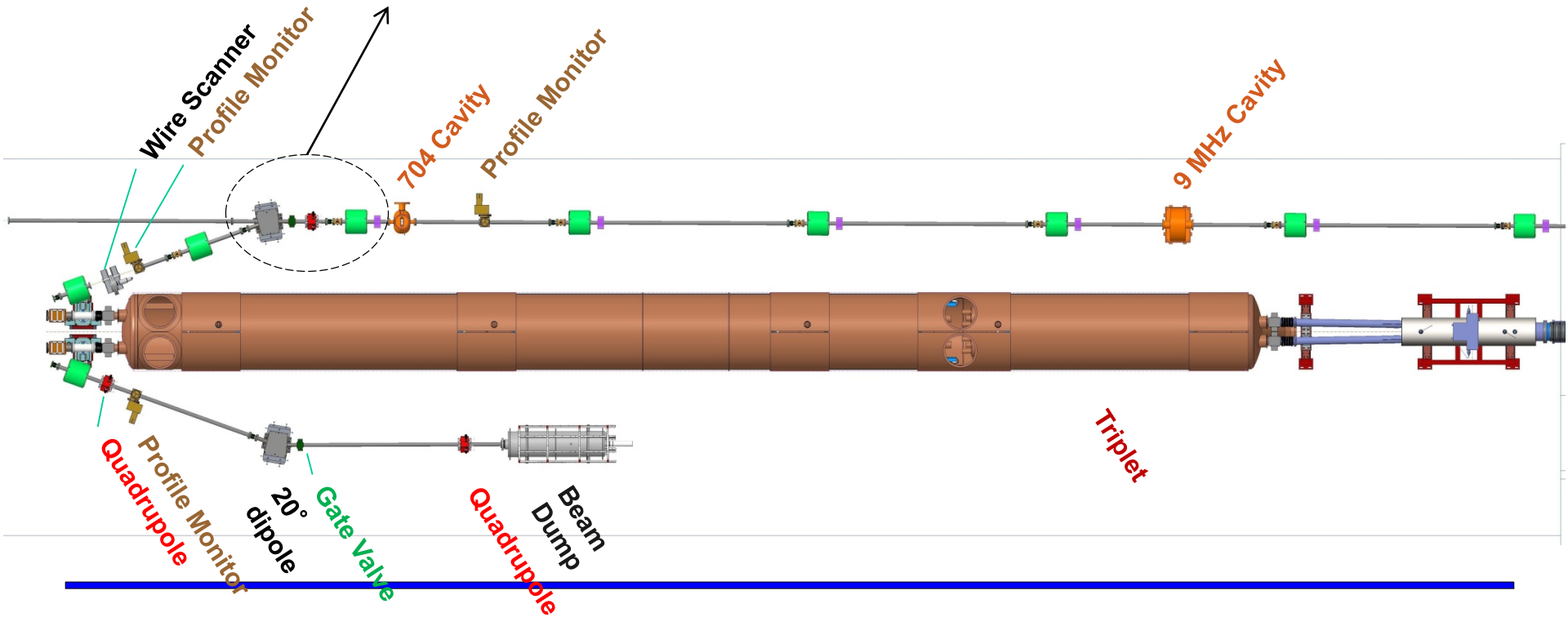

IP 02:00

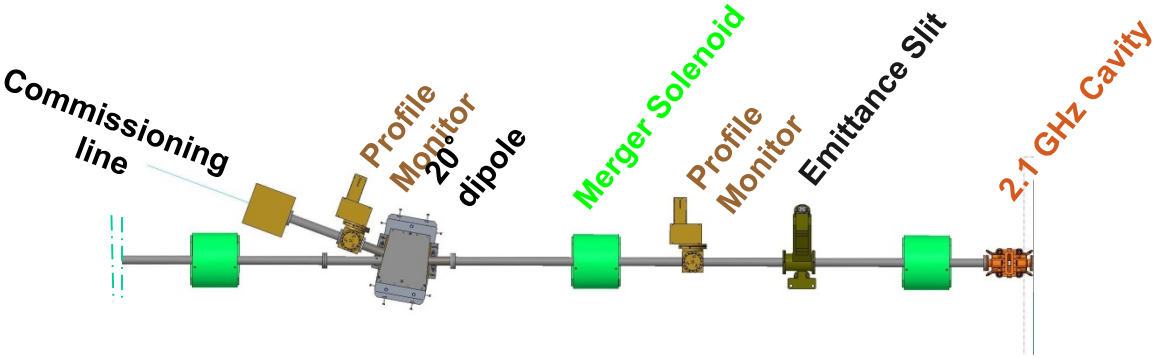
Commissioning line
Profile Monitor
20° dipole
Merger Solenoid
Profile Monitor
Emittance Slit
2.1 GHz Cavity

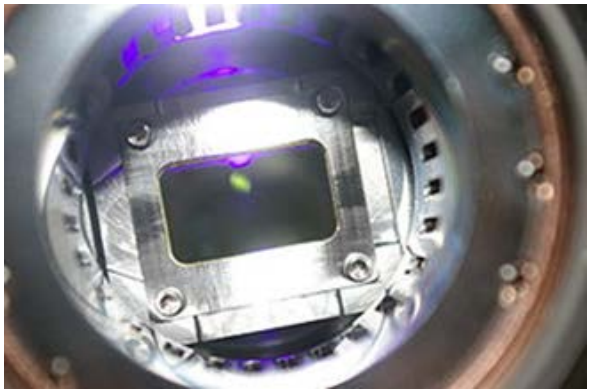

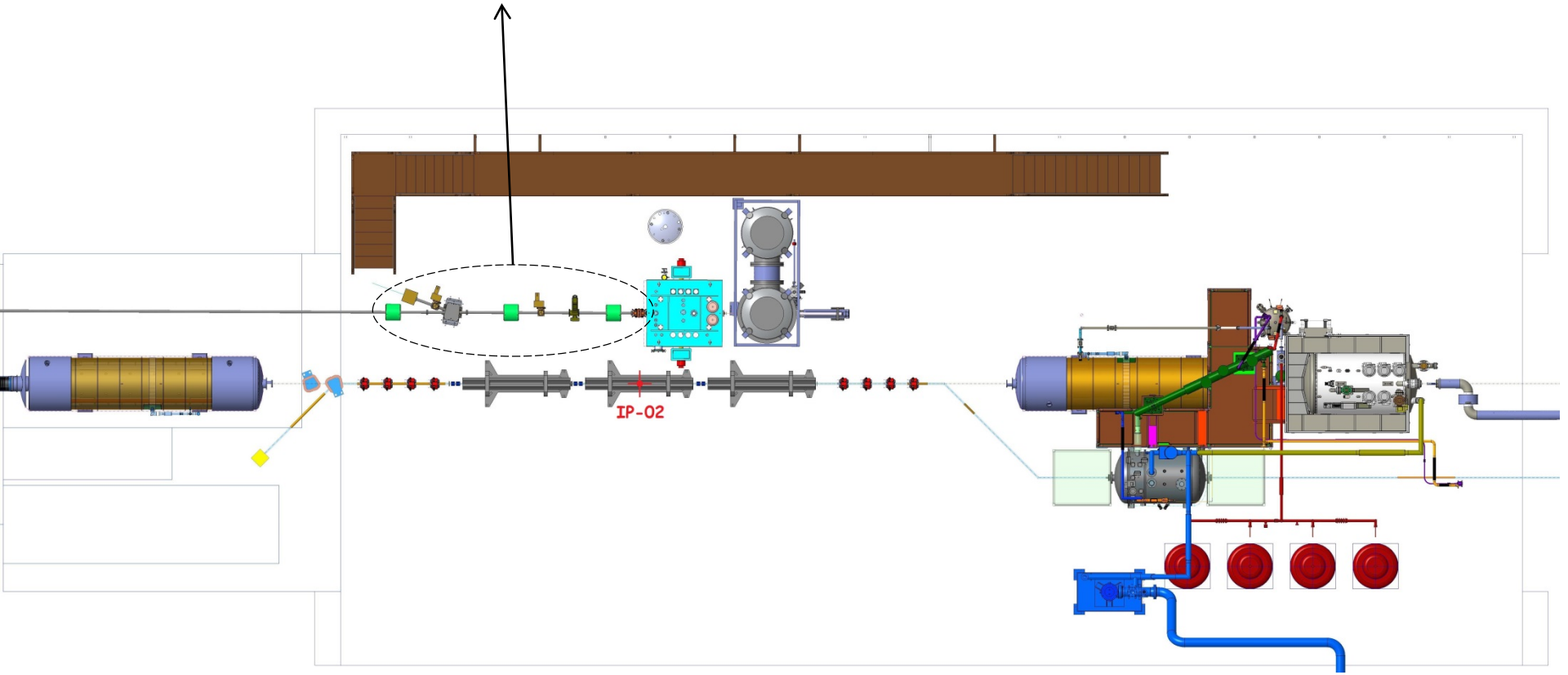
IP-02

Diagnostics: Gun to Booster Cavity

Parameter	Instrument
Position	BPM System
Current / Charge	ICT, DCCT, Faraday Cup
Profile	Profile Monitors (PM)
Halo	Moveable Halo Detectors
Emittance	Multislit mask + PM

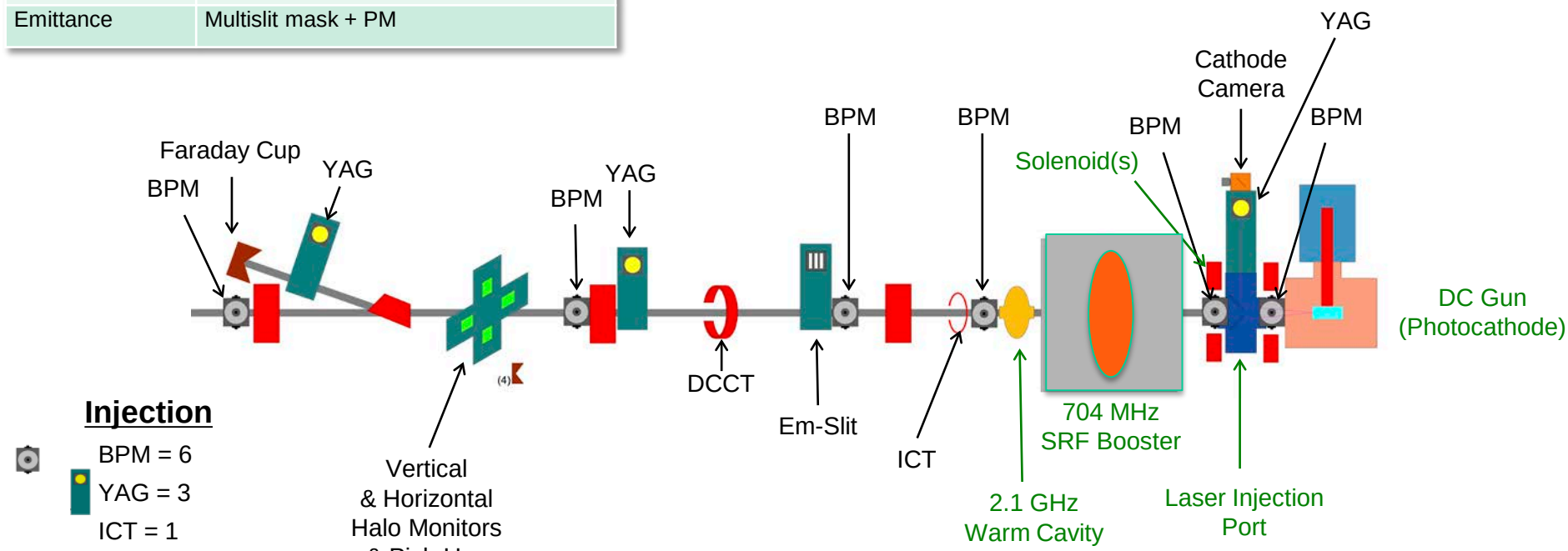

Injection

- BPM = 6
- YAG = 3
- ICT = 1
- DCCT = 1
- Emittance Slit = 1
- Halo Pairs = 2
- Faraday Cup (& pick-ups) = 5

Cornell Layout GtB,
Bake-out to 200C near DC Gun
DC Gun instrumentation:
- **Large Button or ERL Buttons or Striplines??**
- Profile Monitor in Laser Cross
- Cathode Camera in Laser Cross

BPMs in Transport Section

Small Dia. BPM Housings (2.38 ID), 10mm buttons
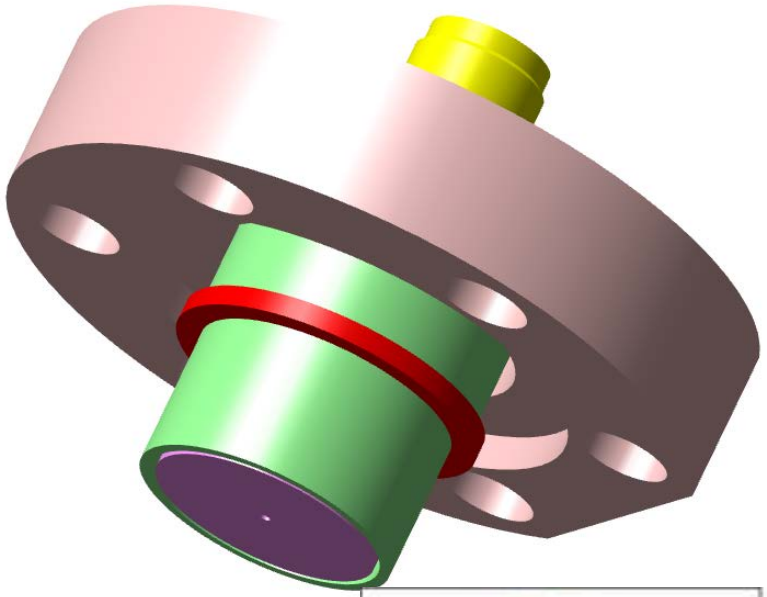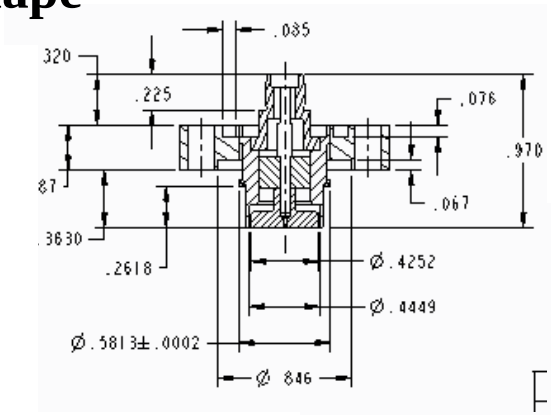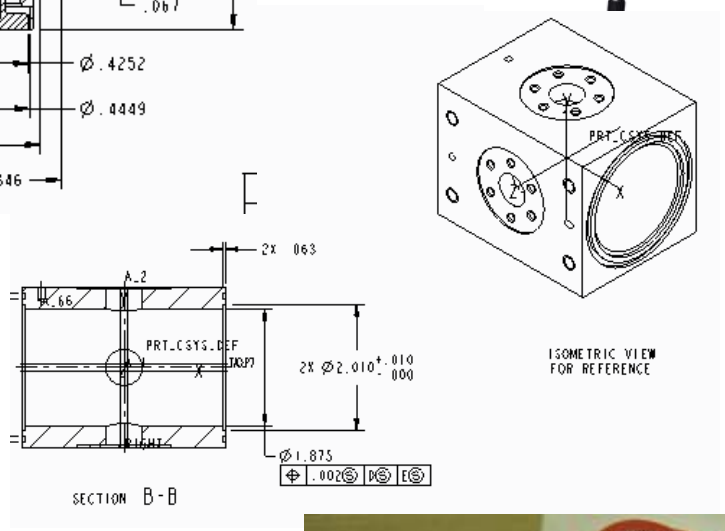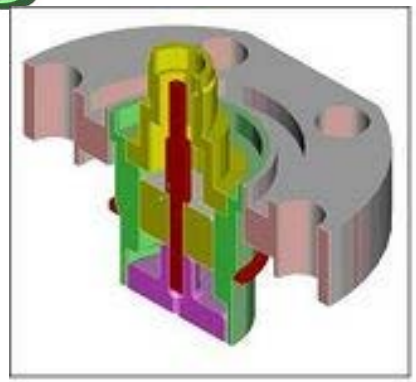
- **ERL Buttons different size and shape**