Minutes of LEReC Cooling & Merging Sections Meeting
4 June 2015

A. Arno, M. Blaskiewicz, D. Bruno, V. De Monte, A. Fedotov, D. Gassner, K. Hamdi, J. Kewisch, G. Mahler, M. Mapes, L. Snydstrup, K. Williams, G. Whitbeck

- Close to freezing the design for the Cooling Section.
- The 20 dipole will be moved toward the triplet (~32.8 cm per K. Hamdi). Solenoid position near the 20 dipole will not be moved per A. Fedotov. Note: Now the standard LF Solenoid spacing is 117.59” (6 places) and 116.0” at 180 dipole end.
- Bid for standard CS bellows (qty-26): Lowest bidder will not be considered due to exceptions to technical requirements. Next bidder will be selected.
- Bid for sliding bellows at 180 dipole: First bidder dropped. Next bidder K. Lesker, expected to be awarded contract.

Beam Line Layout – Merging Line to Cooling Section

- Jorge gave Design the magnet and instrumentation layout for incoming transport beam line (2-1/2”): BPM, PM, wire scanner, and solenoids. Solenoids are new design, 30 cm long.

Instrumentation

- The BPM’s mounted at the 180 dipole chamber flanges will use same buttons as C.S. BPM in smaller body. These BPM’s will be converted to ‘hybrid’ BPM’s, a combination of a BPM and a PM. The vertical buttons will be removed and replaced with PM. The BPM-PM on the Yellow beam line will also include a Slit in the vertical assembly.
- Small BPM to be added to Yellow beam line at the 180 dipole chamber at flange opposite the above mentioned BPM-PM-Slit and ~1 m away, but before bellows. The 180 dipole chamber had to be extended to create 1 m distance.
- Actuator (motion stage) for PM’s - Energy Slits: Dan Weiss submitted WebReq.

Magnets

- For the 180 chamber materials M. Mapes has tested a weld with 316 materials for resulting permeability. It was found to be 1.2 at the weld prior to annealing and after annealing was 1.02 with 308 weld rod and 1.03 with 316 weld rod. P. Thieberger said that this was acceptable.
- 180 Dipole Magnet: Drawings are ready. There is some uncertainty of the machining tolerances for the iron core. G. Mahler to discuss with W. Meng. General opinion of scientists is to manufacture to the best achievable tolerances. Per A. Fedotov the multipole content required is 2e-4 quadrupole and 3e-3 hextapole. SOW is still needed (similar to the existing 20 dipole SOW).
- Chamber for 20 Dipole Magnet: Final changes made to drawings, send next to checking.
- Post-Meeting Solenoid Status:
- HF Solenoids being manufactured by Buckley: Delivery estimated to be shipped on 8/20/15 + 6 weeks shipping + customs. Coil tooling materials received, the tooling design completed and manufacture starting. Magnet part machining to start this month. Copper conductor delivery expected on 7/6/15.
- LF Solenoids being manufactured by Alpha: They started winding the trim coils and are machining all the magnet parts. The main coil wire delivery is expected next week.

RF Cavities

- Warm RF Cavity Design Review on 15 June. Plan to place order for 2.1MHz by August.

Overall Layout

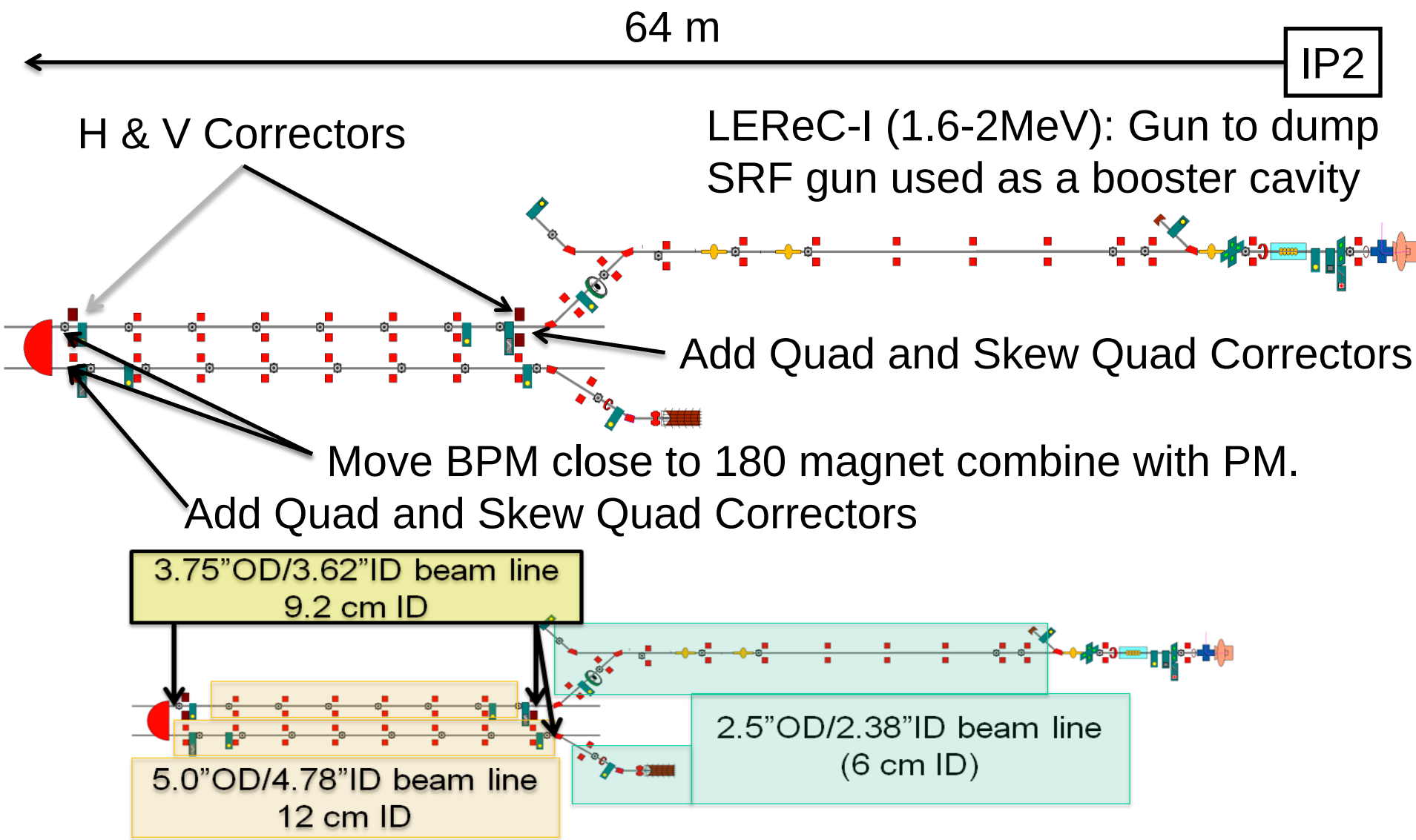

Freeze Cooling Section??

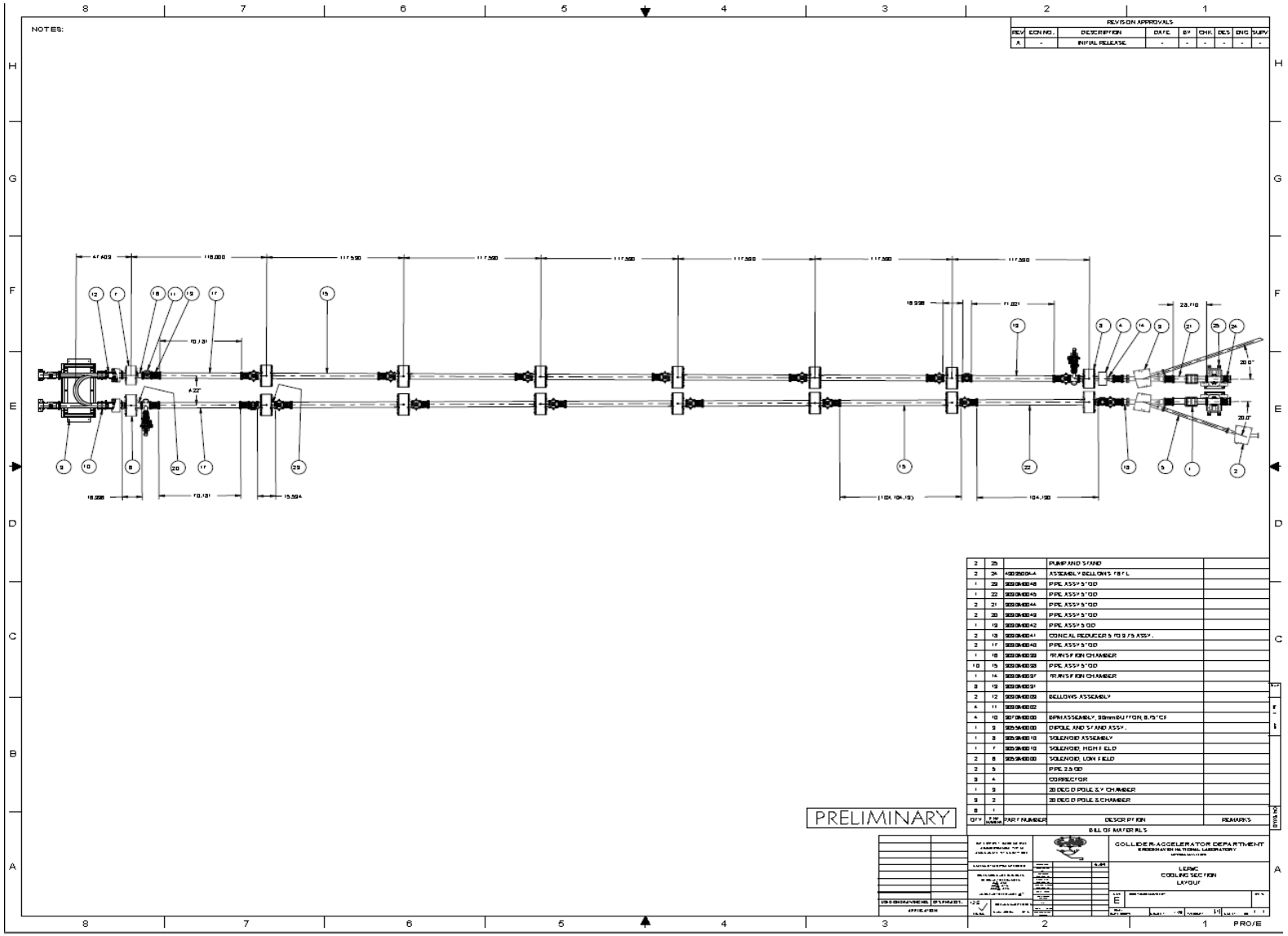

180º Dipole Magnet Neighborhood II

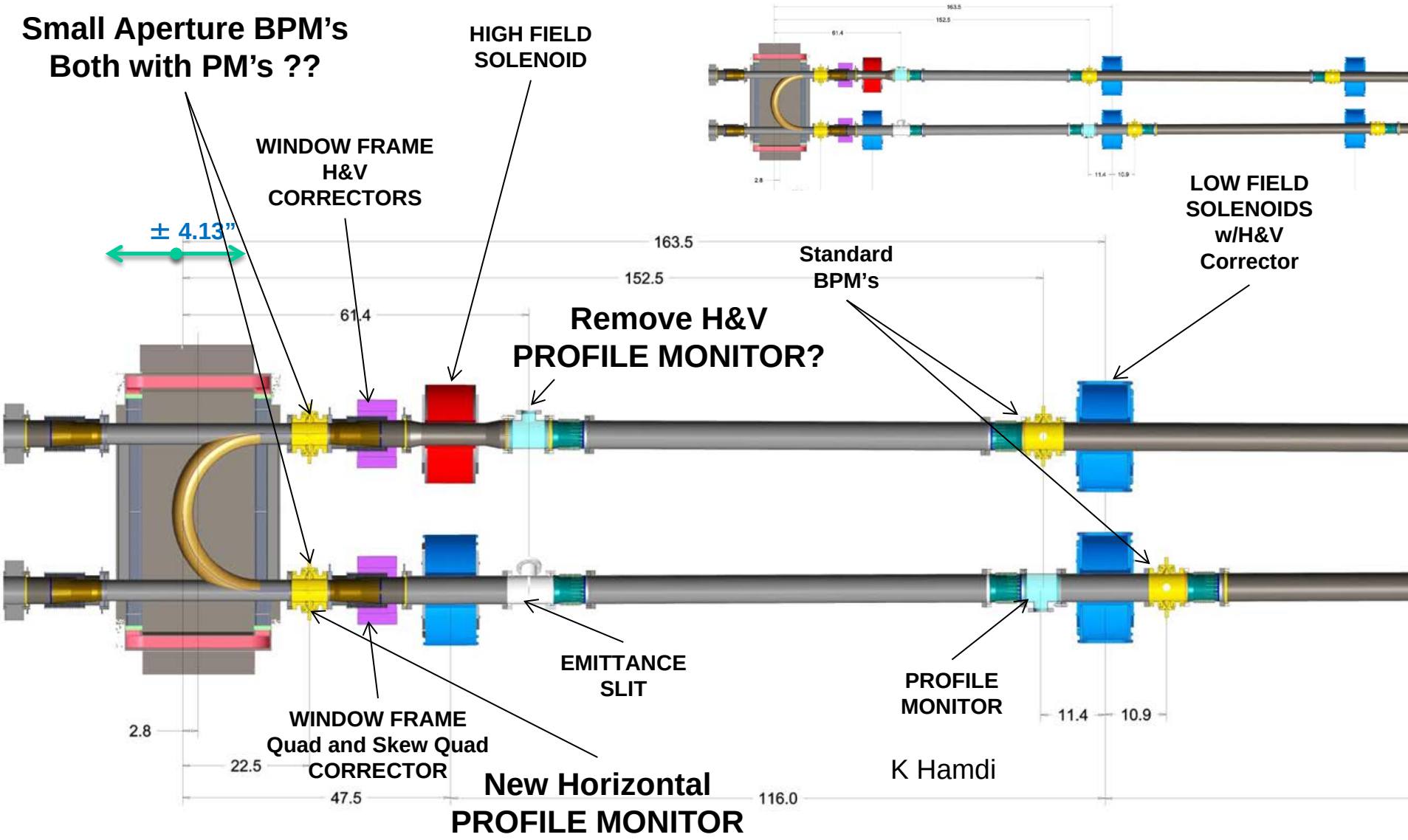

K Hamdi

180º Dipole Magnet Neighborhood II

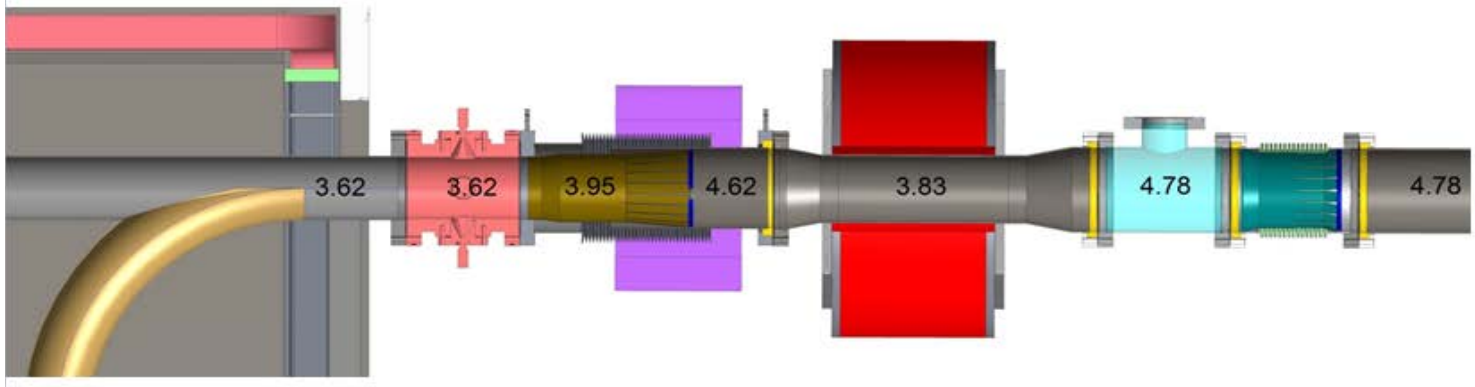

Aperture Transitions

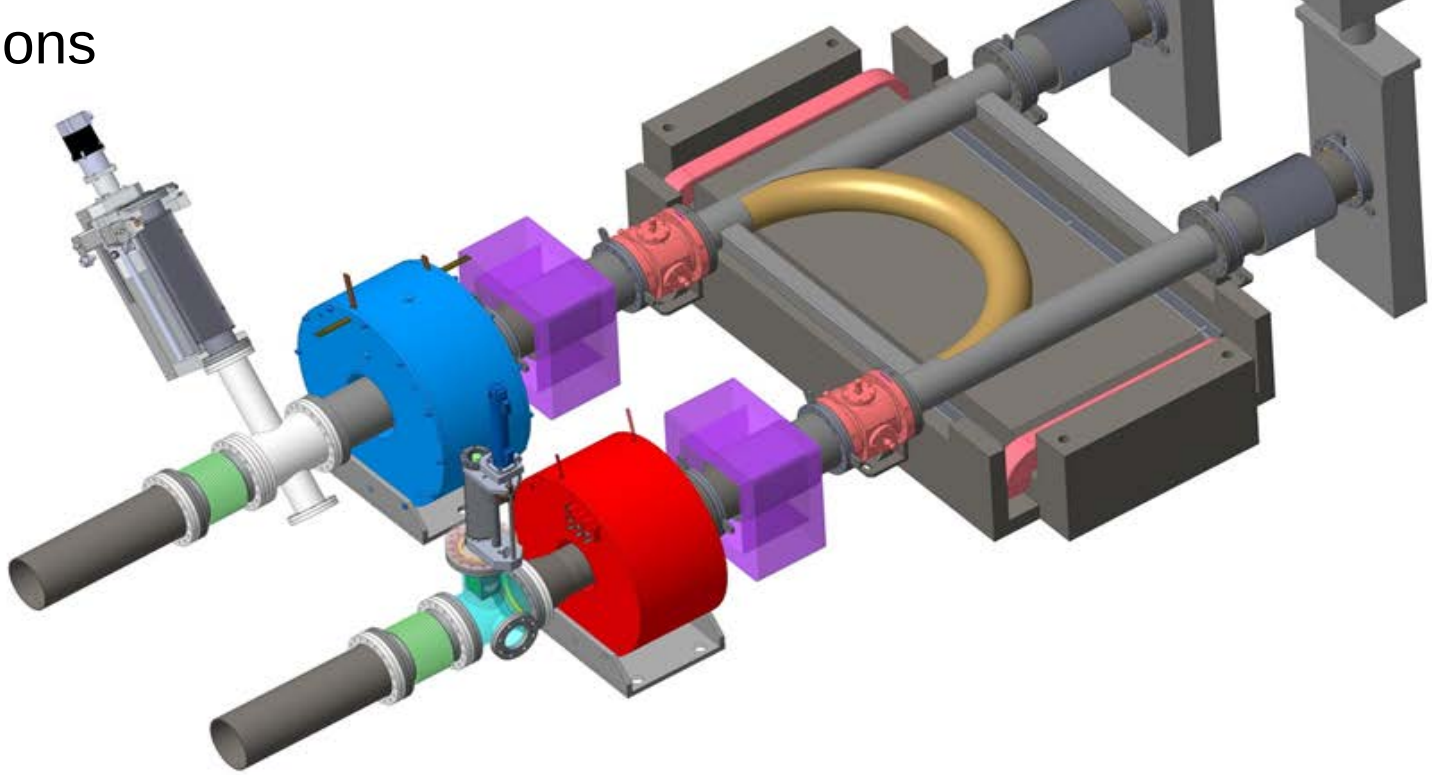

LeReC 180º Vacuum Chamber Permeability Measurements

316L TUBE BENT AT 14” RADIUS AND BUTT WELDED

TUBE CROSS-SECTION

TUBE ANNEALED AFTER WELDING @1080 C FOR 30 MIN

Welding rod	Tube as is	Tube after bending	weld	Annealed weld	Annealed tube
308	1.01	1.02	1.2	1.01-1.02	<1.01
316	1.01	1.02	1.2	1.01-1.03*	<1.01

* Small spot on weld 1.03

BPMs in Cooling Section (14 Locations)

Large Dia. BPM Housings (4.8 ID), 28mm buttons

- **Drawings complete**
- **SOW and Spec complete**
- **Requisition approved**
- **Order Placed with MPF**

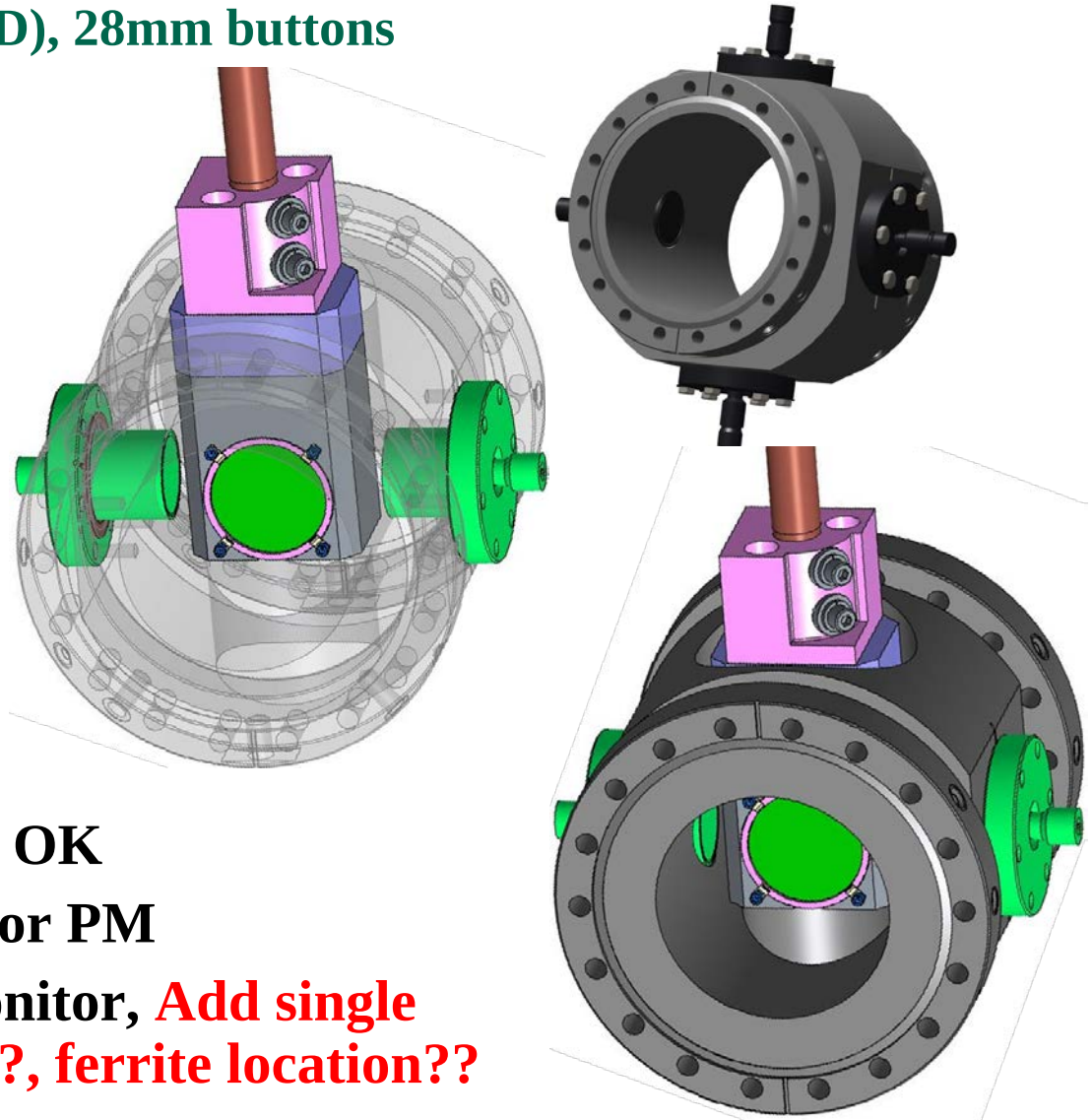

<u>Special ID for 180 Magnet</u>

- **Same button size, Analysis OK**
- **Eliminate vertical button for PM**
- **Combined with Profile Monitor, Add single emittance slit, impedance??, ferrite location??**

20º Dipole Neighborhood

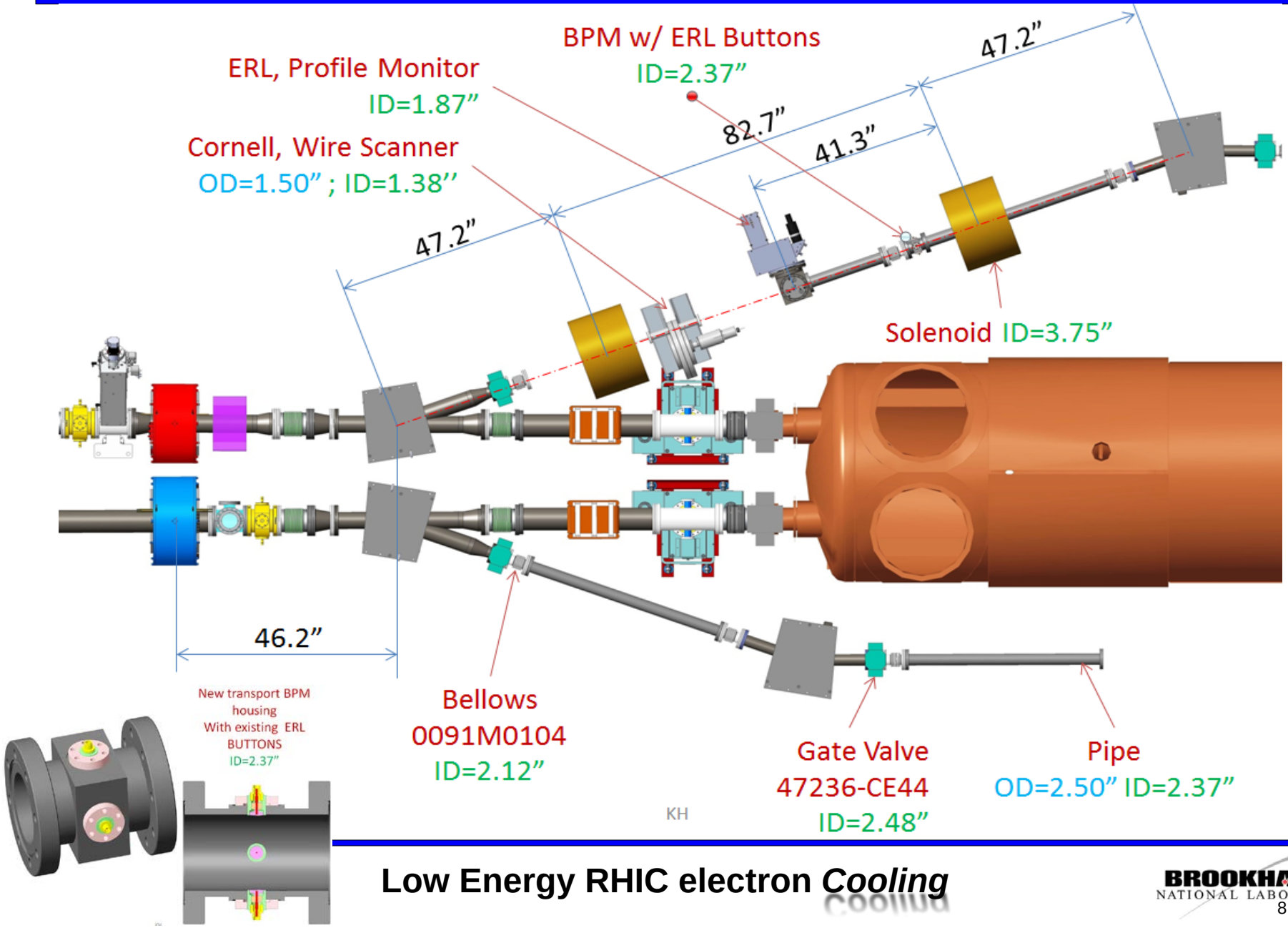

20° Dipole Neighborhood

Move the 20° dipoles closer to the triplet.

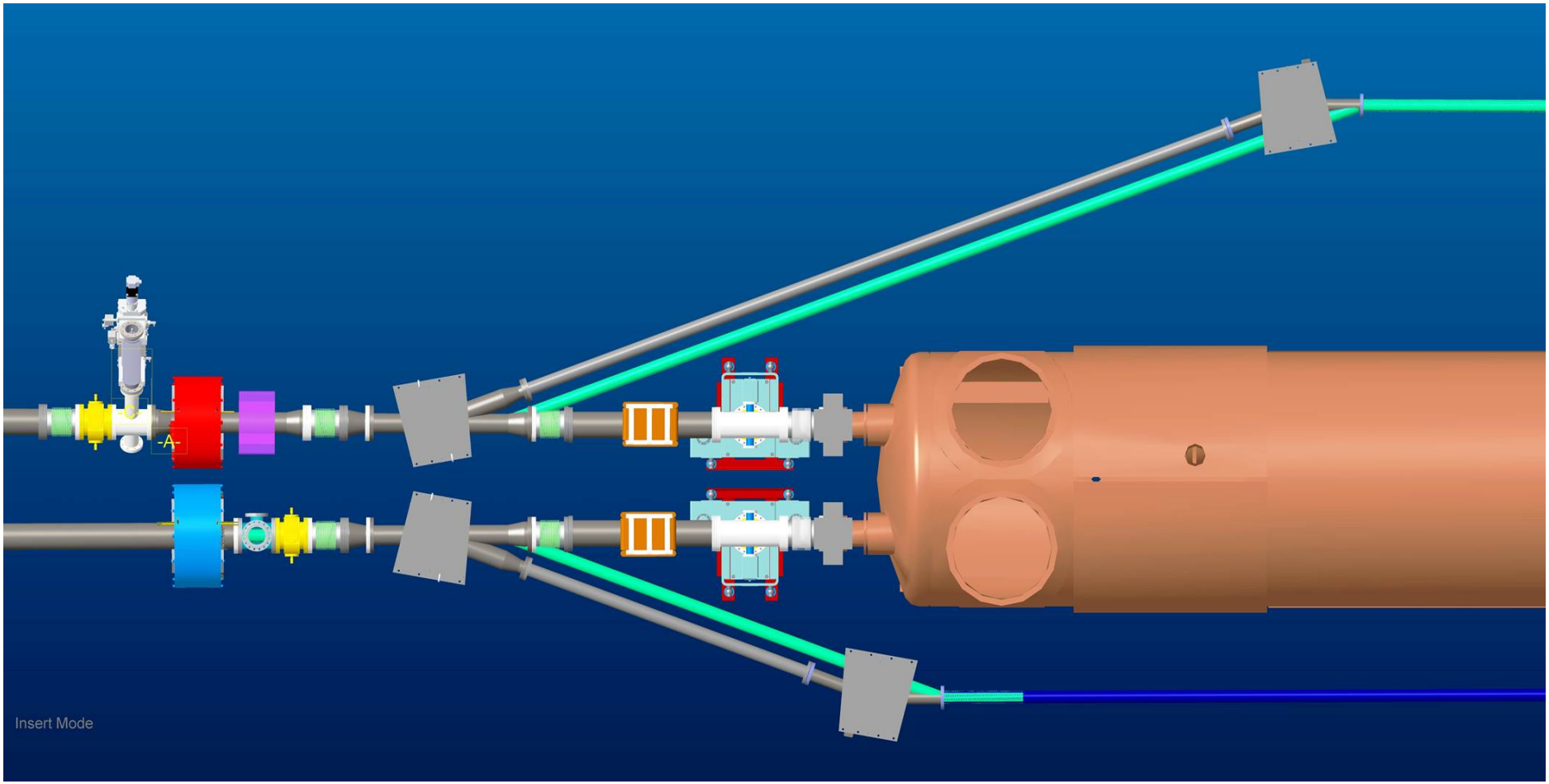

LEReC Dipole Skew Quad Corrector

Window-frame Skew Quad: 100 A-turn per corner = s-quad gradient 3.19 G/cm or, 3.19E-2 T/m

Current polarities:

- Opposite corners have the same polarity
- Adjacent corners have the opposite polarities.

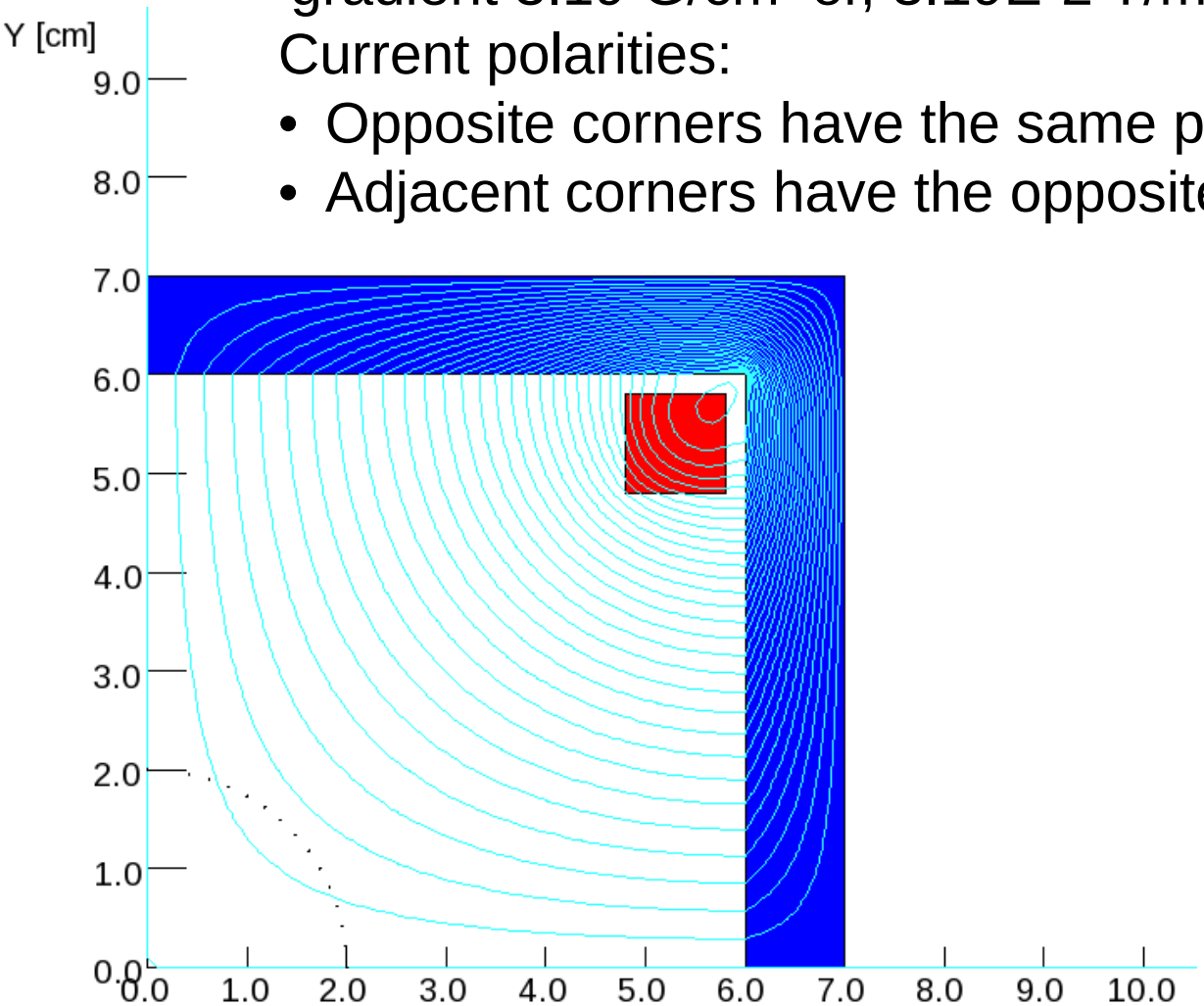

5 cell cavity location

New updates?

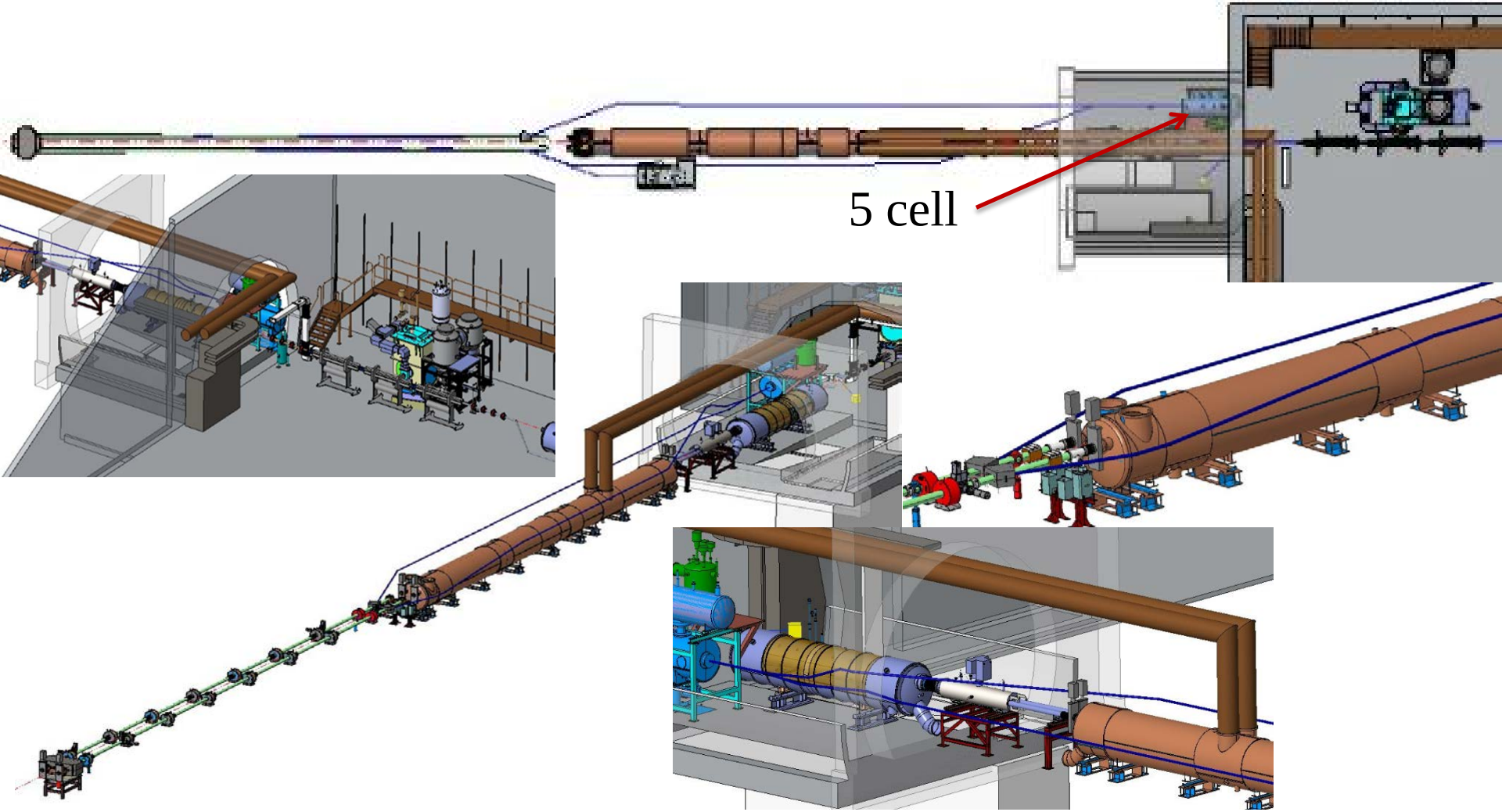

Compensating and Matching Solenoids

Contract Awarded: 9/15/2015 delivery estimate for both?

Buckley magnets complete 8/29/2015 + 6 weeks shipping + customs.

Alpha Magnetics update?

Design support stand assembly – provide space for mu metal shields, separate beam pipe stand support.

Magnetic shielding analysis (Wuzheng)

Design prototype mu metal shields and supports.

Magnet measurement fixture plan for prototype and design test fixtures.

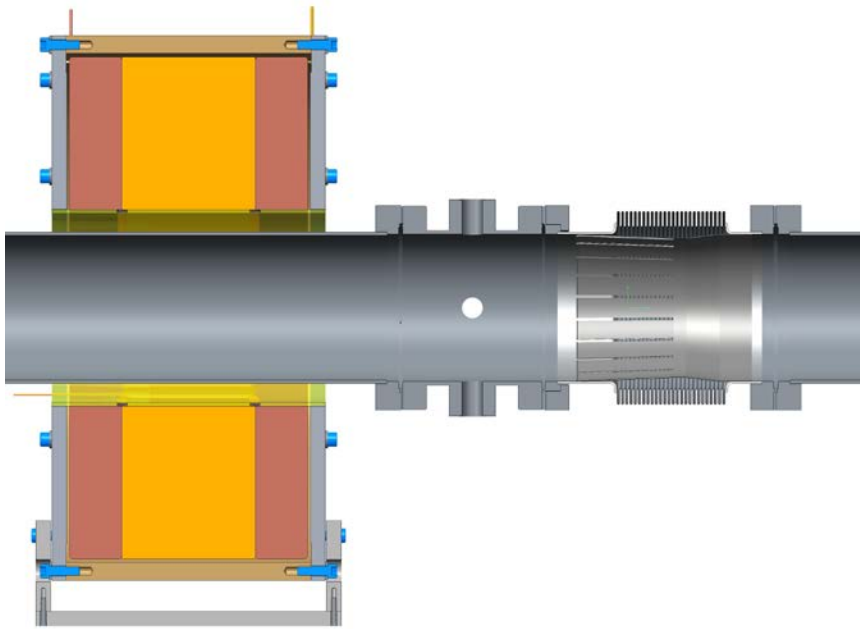

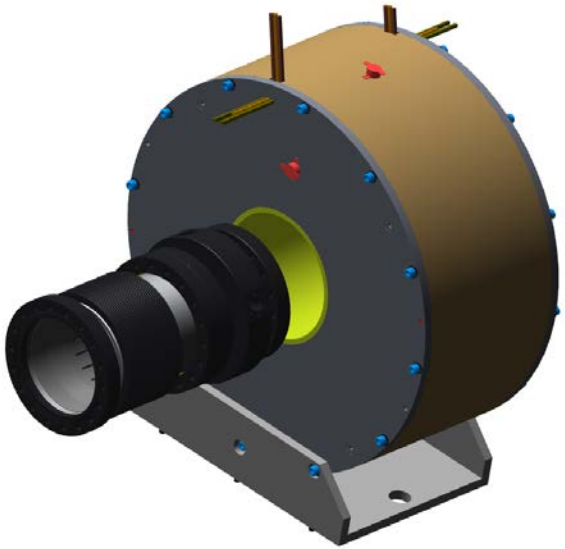

Cooling Section Profile Monitors

Ferrite ring mounting design complete. CMD5005 material.

Requisition for commercial vacuum linear stage, SOW and Spec complete

YAG screen/mirror holder design complete.

Fabrication drawings for YAG screen/mirror holder and vacuum chamber

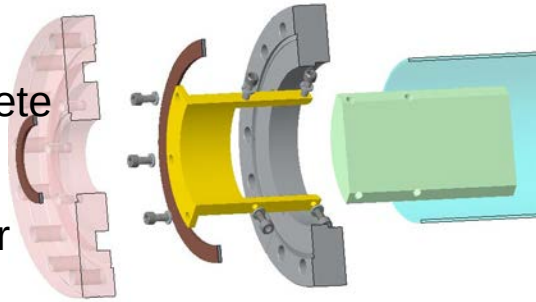

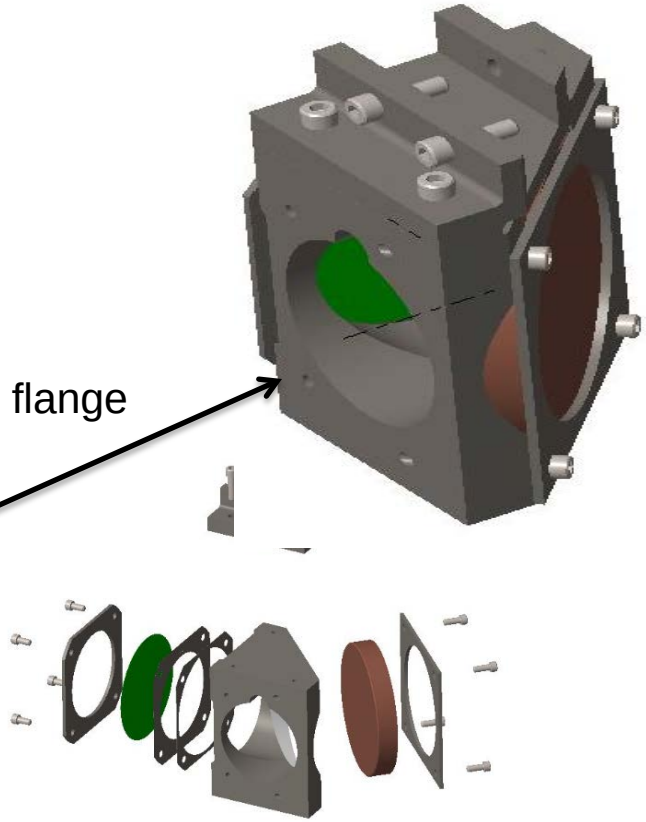

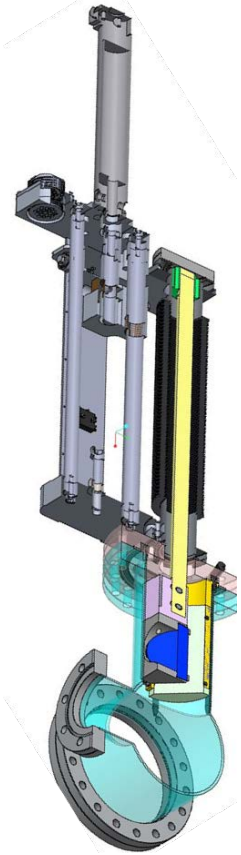

Cooling Section Emittance Slits

Motor drives and position indication specs. approved by vendor.

Requisition for commercial vacuum linear stage?

Tungsten plate vendor, design adapter tungsten plate to drive shaft flange.

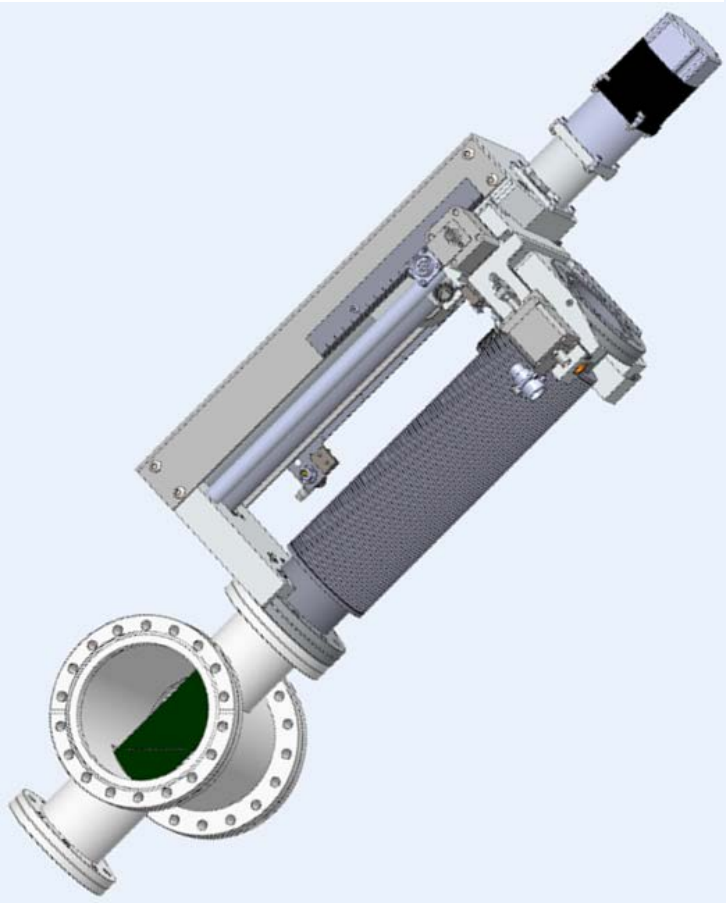

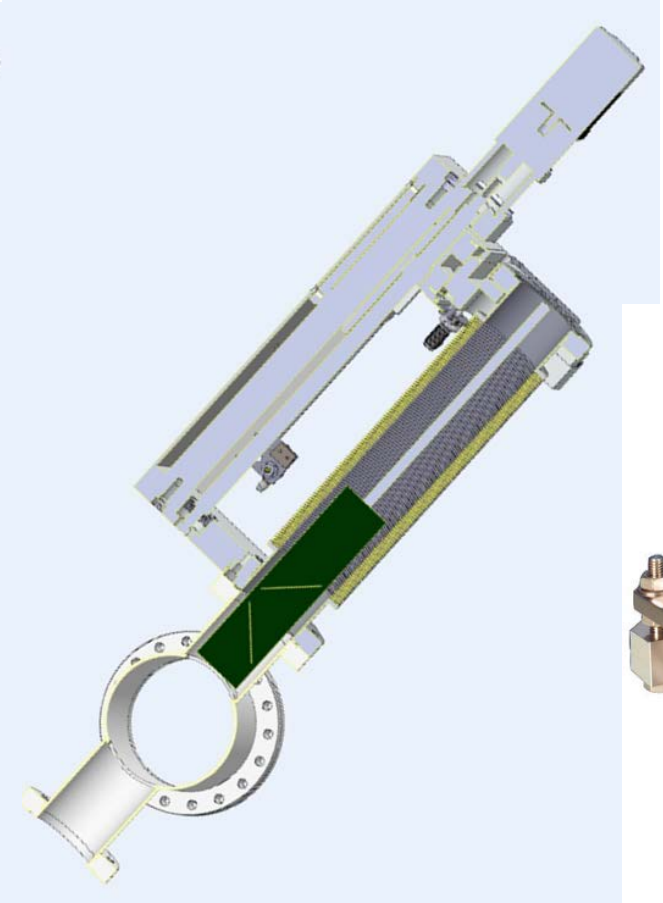

180º Dipole Magnet

Requisition Status

Range of motion for magnet core +/- 10cm.
Magnet Vertical Gap = 10.0 cm (3.94 in.)
Vacuum Chamber Aperture = 9.5 cm (3.75 in.)

Electron tracking results and field qualities along entire trajectory on R=2 cm curved cylinder:

	Ek = 5 MeV	Ek = 1.6 MeV
Total current per coil (Ampere-turn)	2119.146	791.077
Overall current density (A/mm²) (coil-pack cross-section: 5.0 x 6.0 cm)	0.7064	0.2637
Central Field deep inside magnet (Gauss)	525.21	195.78
Effective Magnetic Length (cm)	109.43	109.57
Full b1-integral (dipole) (G-cm)	5.7471E4	2.1452E4
Full b3-integral (6-pole) (G-cm) [Ratio to dipole integral]	0.132 [2.30E-6]	0.005 [2.44E-7]
Full bending angle as shown in tracking studies (required 180°)	180.002°	180.003°

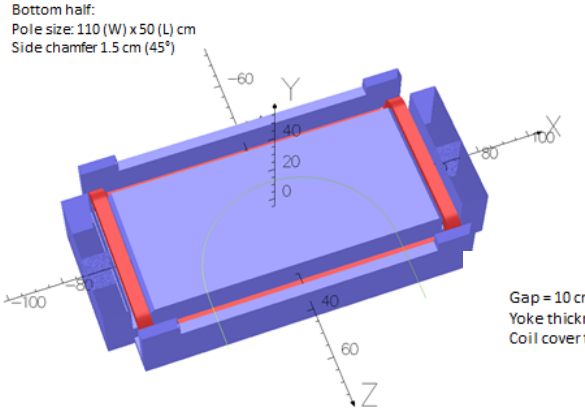

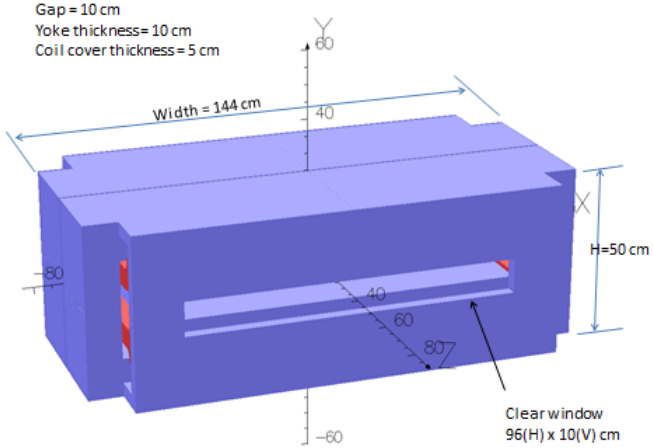

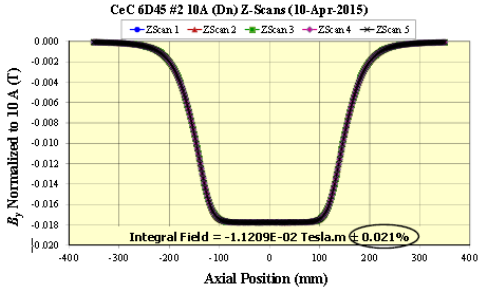

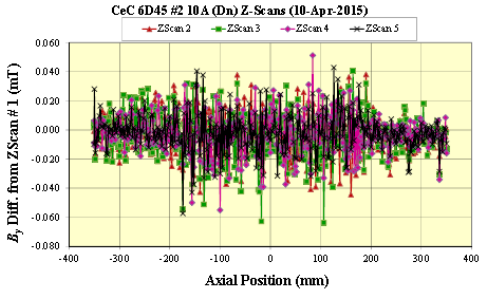

Vacuum Hardware

Beam line bellows & 180 accordion bellows requisition status.

“Standard Chamber Length”

180 chamber 316L vacuum annealed to 900C after welding.

Test chamber welded and measured. Annealing

Shielded valves on order, **need DC Gun shielded valves**.

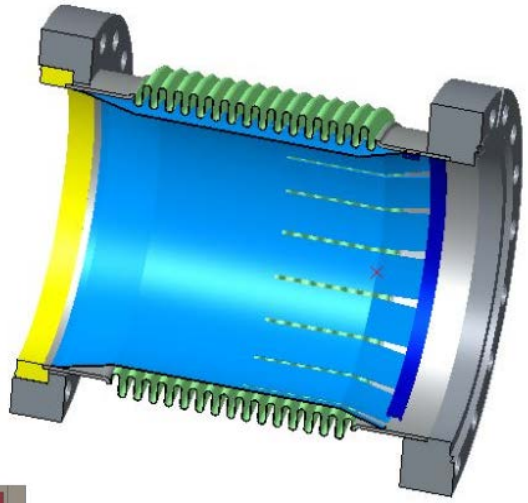

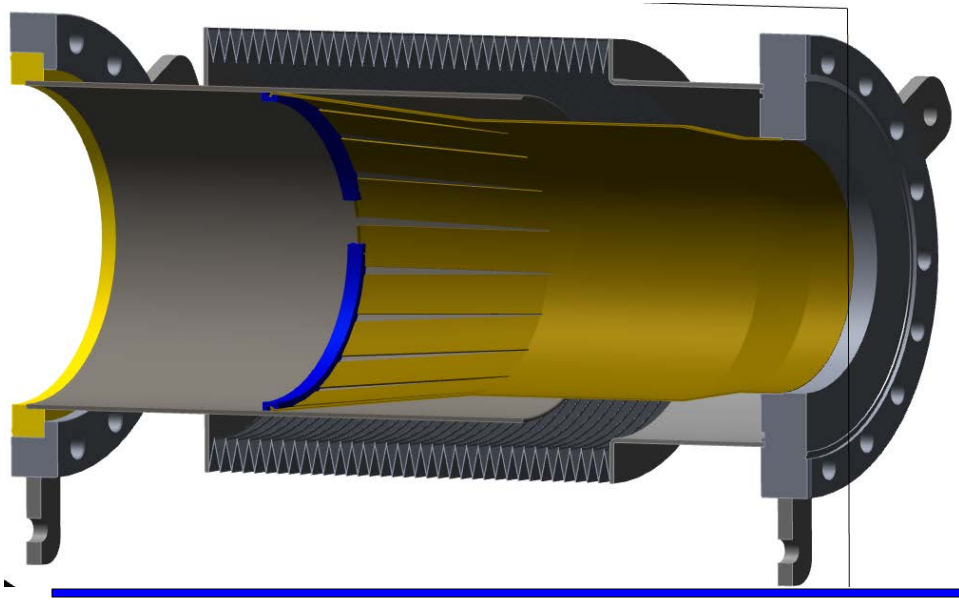

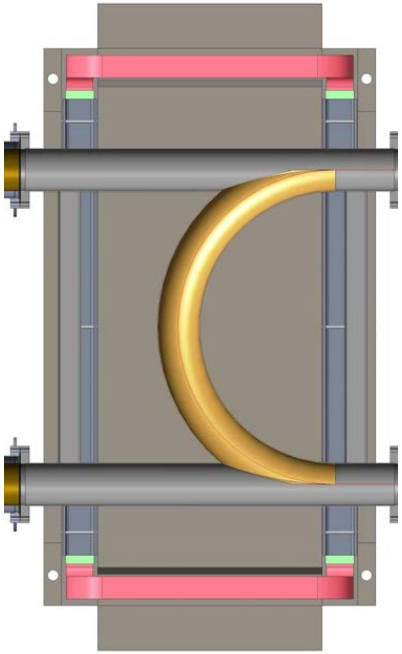

20° Dipole Magnet

Requisition approved SOW – 2 magnets by 10/1/2015.

Order Placed 5/6/2015 Everson Tesla

Estimated Delivery 1st two magnets 10/1/2015

Distance Between Pole Faces = 10.4 cm (4.1 in.)

Magnet Vertical Gap = 10 cm

Vacuum Chamber V Aperture = 9.5 cm (3.74 in.)

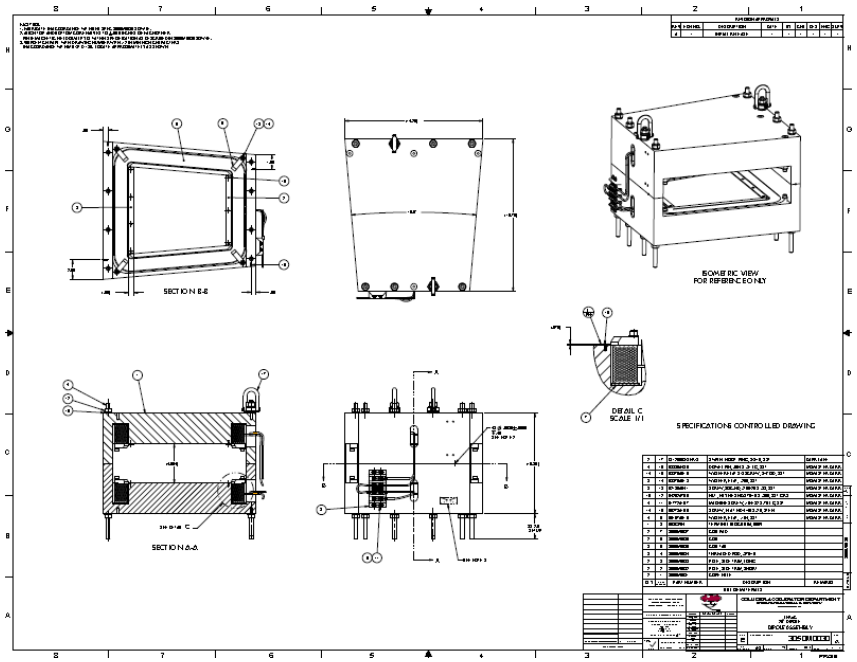

LEReC 20-degree Dipole (Gap clearance=10 cm)
(distance between pole faces =10.4 cm)

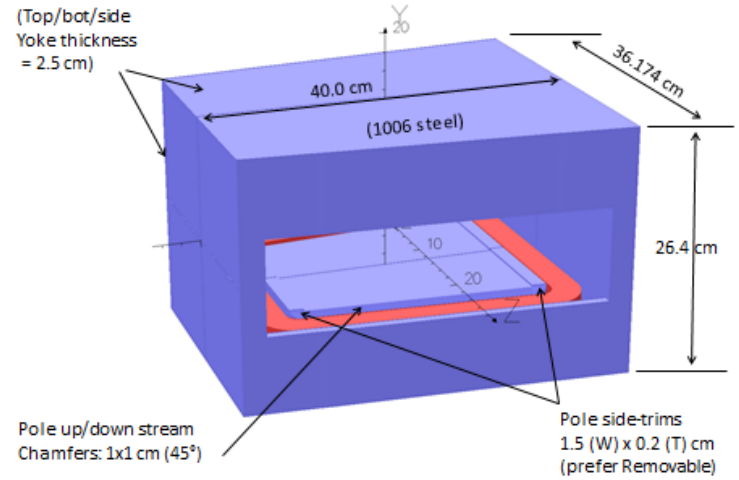

Electron tracking results and field qualities along trajectory on R=1 cm curved cylinder:

	Ek = 5 MeV	Ek = 1.6 MeV
Current per coil (Amp-turn)	1053.288	393.192
Overall current density (A/mm²) (overall coil cross-section 3.0x4.8 cm)	0.73145	0.27305
Central Gap Field (Gauss)	251.20	93.73
Half b1-integral (dipole) (G-cm)	3.1982E3	1.1930E3
Half b3-integral (6-pole) (G-cm) [Ratio to dipole integral]	1.803E-2 [5.64E-6]	7.019E-3 [5.88E-6]
Half bending angle from tracking tests (required 10°)	10.013°	10.006°

20º Dipole Magnet Neighborhood

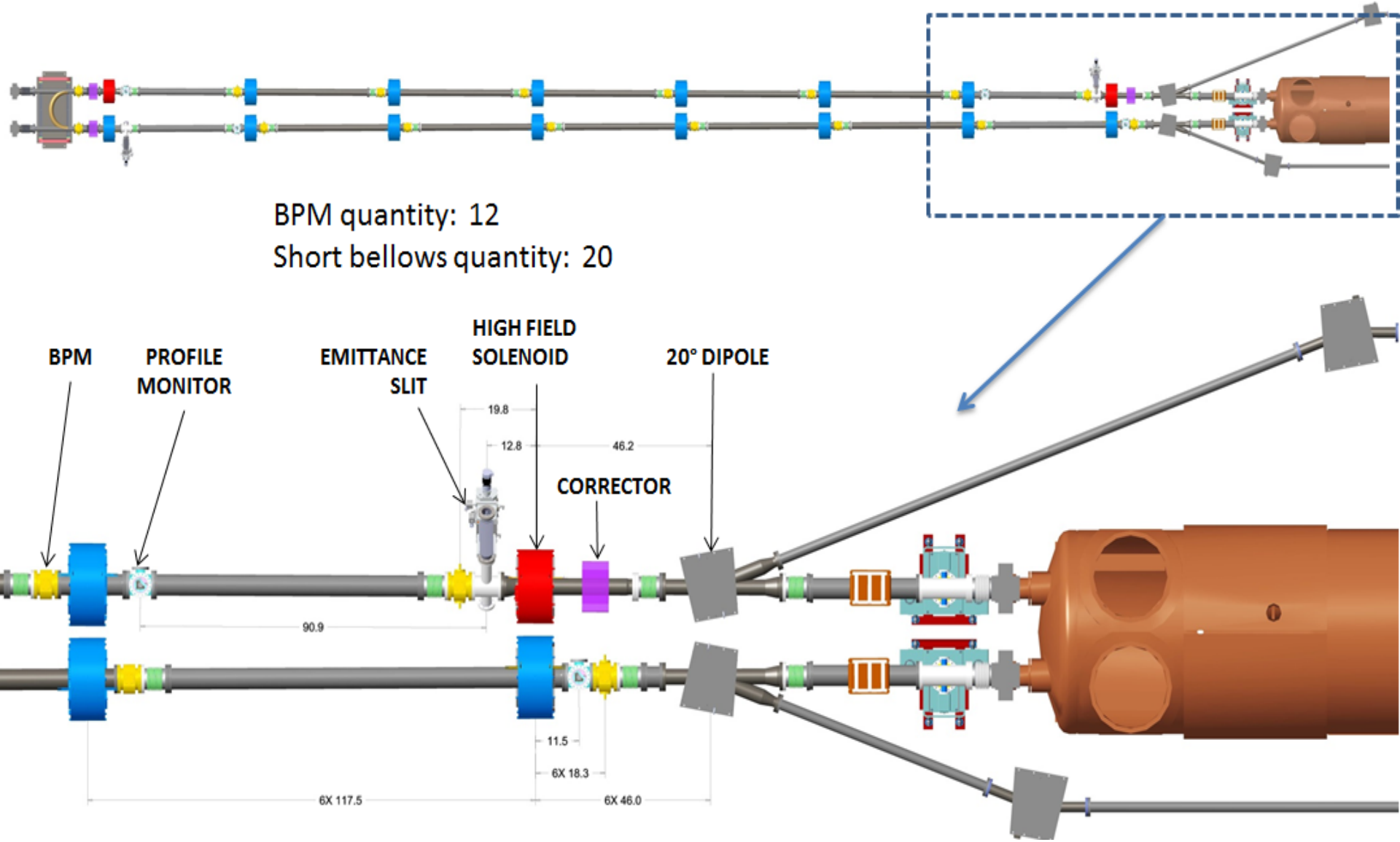

20º Dipole Magnet Vacuum Chamber

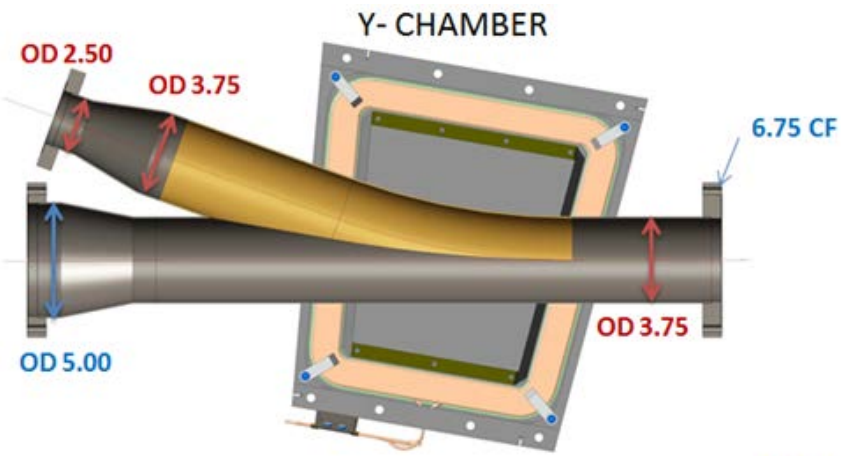

Here attached the wake field analyses of the 180 degree and 20 degree chambers for LEReC. The 180 degree chamber shows a wake loss factor at 0.0186 V/pc, and for the 20 degree chamber, it is 0.0295.
Best,Binping

Fabrication Drawing

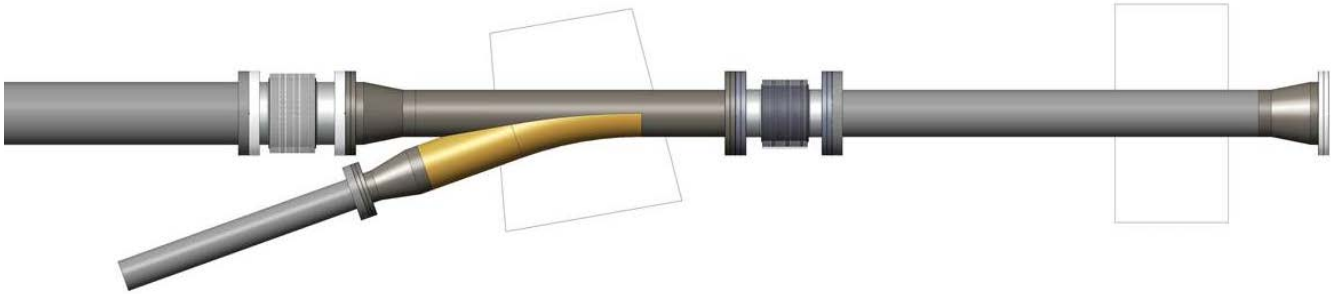

LEReC Cooling Section Design Room

Design 180° dipole chamber for impedance review (KH)

LF & HF solenoid and 20° dipole fabrication drawings (KH)

BPM chamber and buttons (VDM)

Beam Line 5" bellows with shields fabrication drawings (GW)

20° dipole vacuum chamber for impedence review (KH)

180° dipole fabrication drawings (KH)

180° vacuum chamber + large sliding bellows fabrication drawing (KH)

Beam Instrumentation ES W slit & chamber fabrication drawings (VDM)

Beam Instrumentation PM YAG, mirror, mount, & chamber fab. drawings (GW)

Beam Instrumentation PM ferrite insert (GW)

20° dipole vacuum chamber (KH)

20° and 180° stand drawings (KH)

Beam line solenoids, BPM's, and long pipe independent stands.

Magnetic Shielding drawing and solenoid magnetic measurement test station

Cable tray and penetration drawings

LEReC Design Room

Phase 2: 5 cell cavity positioning (RM)

DC Gun Vacuum Chamber Fabrication Drawings (JH)

DC Gun SF6 Pressure chamber specification control drawings (JH)

DC Gun to Booster SRF booster cavity beam line (JH)

DC Gun & SF6 Chamber stands (JH)

RHIC 1:00 move real estate drawings (VDM)

Phase 2: 5 cell cavity positioning (RM) – Revised Position

Phase 1 and 2 cryogenic system layout (RM)

2.1 GHz warm cavity fabrication drawings (MG)

704 MHz warm cavity fabrication drawings

DC Gun cathode insertion drive

DC Gun cathode coating system upgrade – coating system vacuum chamber

Transport line layout drawing (RM/VDM)

Sector 2 Modifications

LEReC:

- Move cable tray/Modify cable tray
- Move Access Controls Gate
- Remove stairway and part of cross-over platform
- Tunnel Penetrations

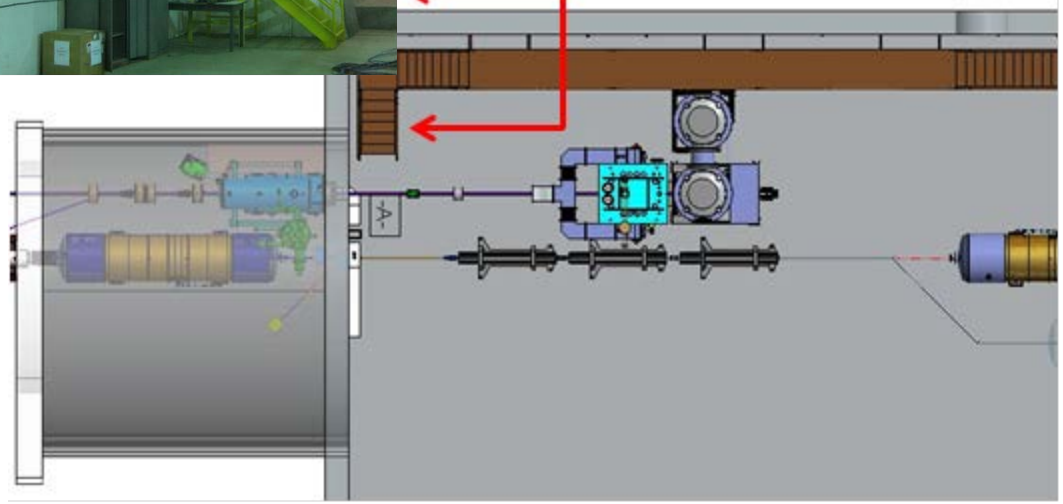

Sector 1 Instrument Relocation for LEReC

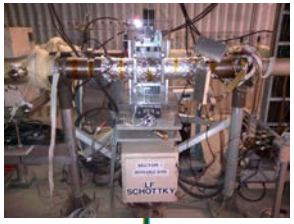

Summary

Champions need to confirm the relocation plan so the *mechanical design* work can proceed.

More details can be found here:
http://www.cadops.bnl.gov/Instrumentation/InstWiki/index.php/Instrumentation_Relocation

Systems in the LEReC Region (40m - 63m) to be Relocated

7 separate mechanical assemblies	New Location	Champion	Mech E.
ARTUS Kickers - Blue V, Yellow H	Sector 2	Drees	
IPMs (Ionization Profile Monitors)- Blue H, Yellow V	Sector 12	Tepikian	Fite
Moveable BPM & LF Schottky, X-Y stage BI1 41m	Sector 1 (closer to Q4)	Brown/Blaskiewicz	
BBQ PLL Kicker stripline (1m) YO1	Sector 1 (closer to Q4)	Marusic	
Triple Purpose Pick-Up on Moveable X-Y Stage YO1 ~42m	Sector 1 (closer to Q4)	Minty/Marusic	
Cable Tray Waterfall			Phillips/Sampson

Systems to be Removed

Electron Detectors (8)	Zhang/Blaskiewicz
Quad Pick-up (0.25m) YO1 40.1m	Minty
Luminescence Monitor Cross at B02 53.1m	Minty
Stochastic Cooling Ceramic Pick-Ups[6-9 GHz] at BI1 67.8m	Mernick

Beam Loss Monitor Detector Reconfiguration, Sector 1

1 BLM per IPM will move with the IPMs to sector 12 — Drees

Minutes from Sector 1 Relocation Meeting, May 22nd 9:15 LCR

D. Gassner

- K Mernick suggest moving the BBQ kicker and triple purpose pick-up assemblies to sector 2, yellow (it appears that there is room). This allows shorter cable lengths, moving towards YO1 Q4 would have meant (undesirable) longer cables than the existing.
- K Mernick recommends that we don't need the moveable X-Y capability on the triple purpose pick-up, this can simplify the relocation effort and beam line assembly.
- K Mernick requests that the Quad PU (0.25m) from YO1 (40m) be relocated (instead of removed), a suggestion is closer to Q4 in YO1, get confirmation from Kevin on new location.
- Can remove the stochastic cooling ceramic pick-ups [6-9 GHz] in sector 2 yellow (62-66m from IP2) since these are no longer used, this makes more room for the first note mentioned above.
- The preference is for the IPMs to be installed as close to Q3 as possible in sector 12. Since they need to be offset because the beam pipes are close together, the horizontal should be closer to Q3. Jesse will layout new IPM locations (plan view) with longitudinal offset and separate stands for review.
- **George suggests prioritize the order of the installations and bake-out schedule, next comment.**
- **Need to get Mike Mapes & Dan Weiss involved for vacuum, mechanical, and bake-out planning.**
- Rob M is following up with Angelika regarding beta function considerations of the new proposed locations of the ARTUS kickers adjacent to the existing ones in sector 2.
- Confirmation that GOF magnets will stay in sector 1 (near Q3), need to check latest LEReC layout.
- **Joe T : Vito committed for this priority and need mechanical engineers.**
- **System Champions need to approve the relocation plan for their respective systems.**
- **Warm Space Committee needs to approve the relocation plan.**