2.1 GHz Warm RF Cavity for LEReC

Binping Xiao

On behalf of the LEReC team

Collider-Accelerator Department, BNL

Sep 3, 2015

BROOKHAVEN NATIONAL LABORATORY

a passion for discovery

U.S. DEPARTMENT OF ENERGY | Office of Science

Outline

- Layout of the LEReC linac
- Description of 2.1 GHz warm RF system
- Summary

LEReC layout

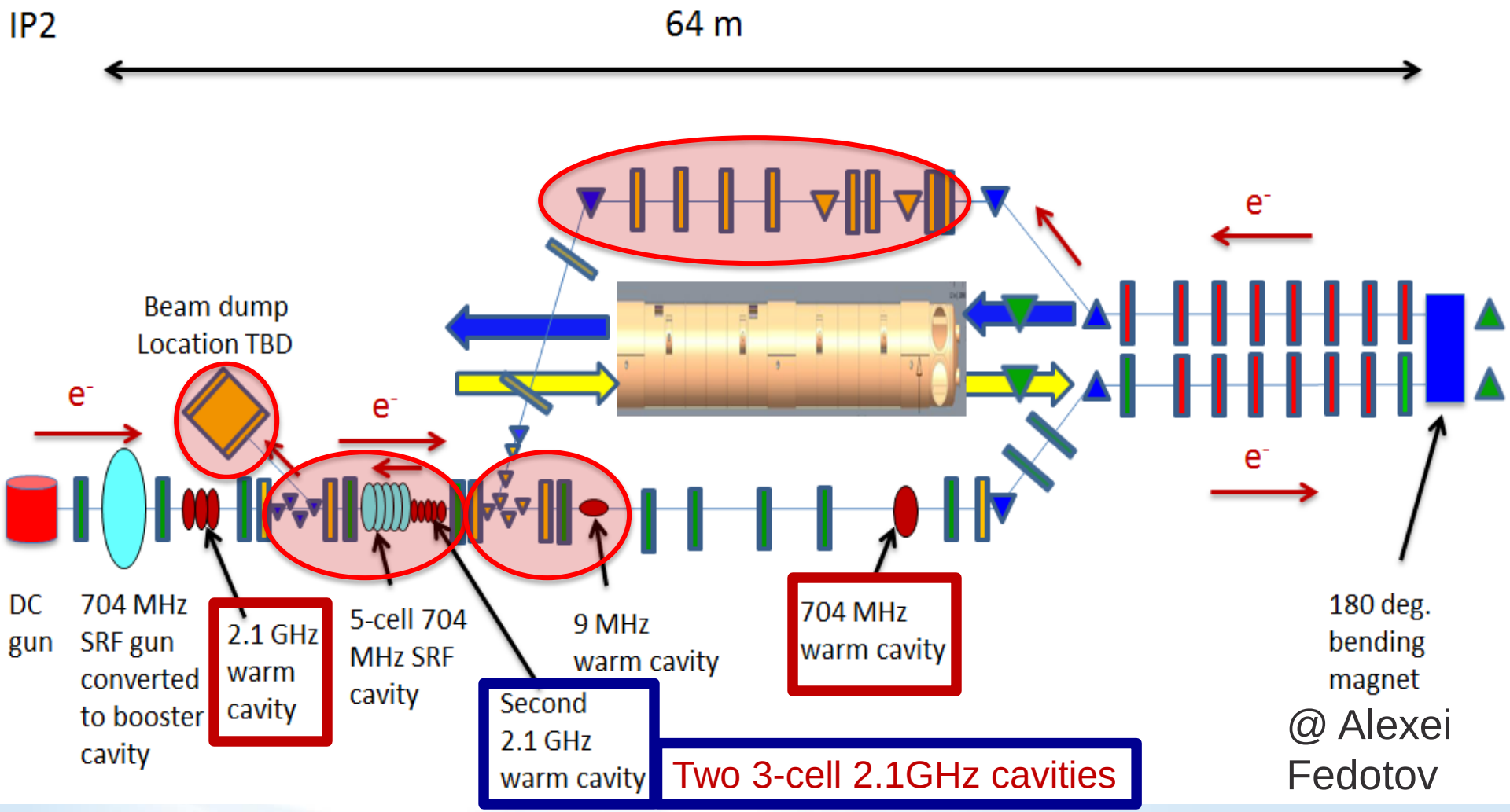

@ Alexei Fedotov

Parameters

	Phase I	Phase II
Frequency [GHz]	2.1107	
Beam pipe ID [inch]	1.875	
# of cells	3	
Voltage [kV]	200	250
R/Q [Ohm]	314	
G [Ohm]	253	
Q0	21000	
Pcav [kW]	6.1	9.5
RF power [kW]	14	14

2.1 GHz warm cavity: 3cell

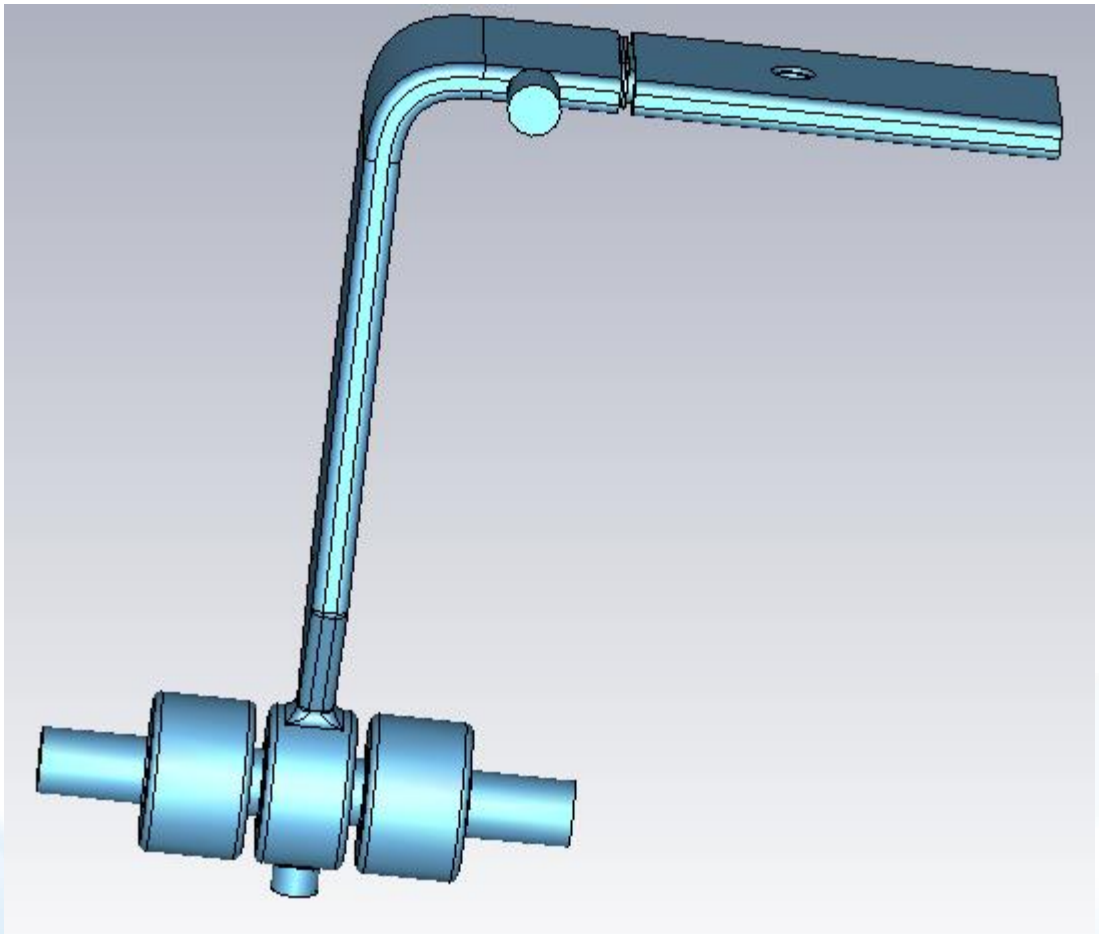

- No coupling slots between cells.
- Beam pipe aperture: cell to cell & end cell 1.875”
- Fixed tuner, FPC tuner, 2 PUs…
- Dimensions (cavity radius, FPC slot height, nose cones etc) are fine tuned.

2.1 GHz warm cavity: stub

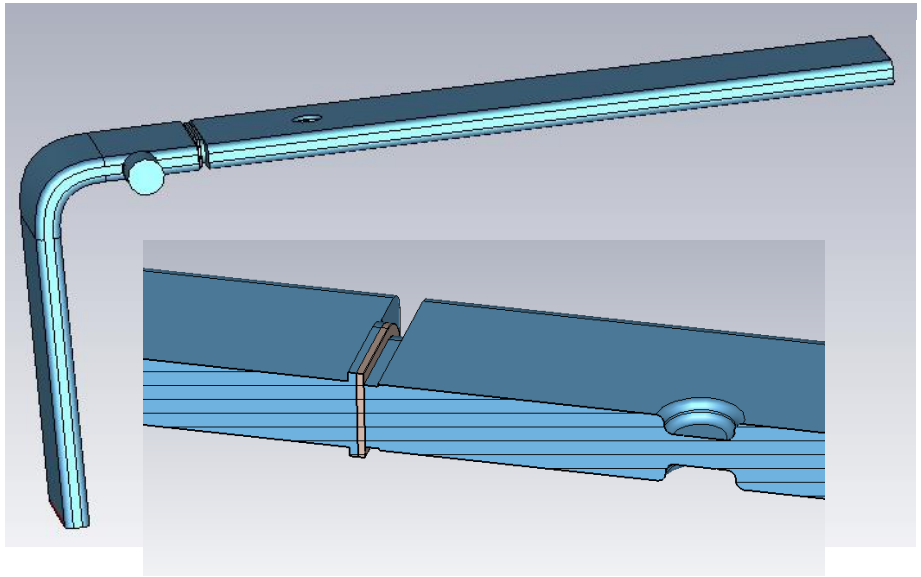

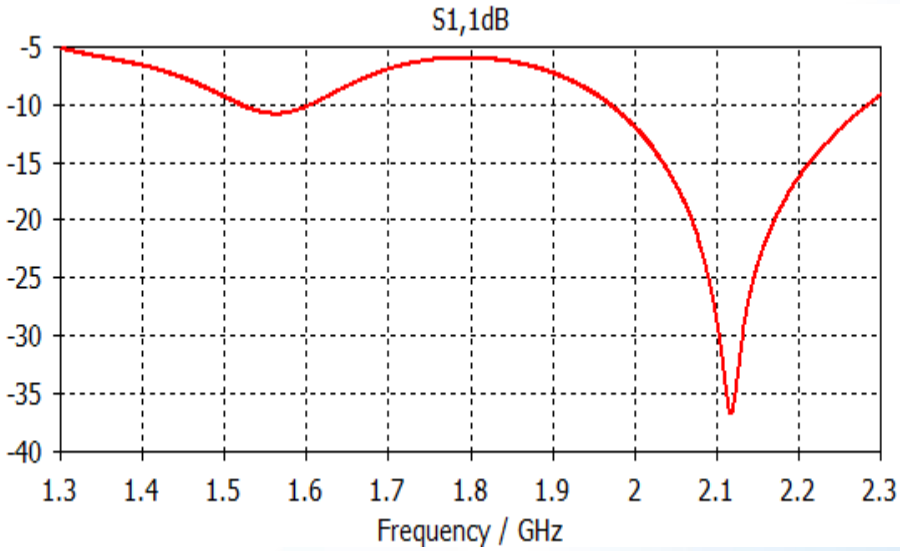

Added stubs near RF window for a better match at 2.1 GHz (window originally designed for 1.5 GHz)

Alumina window RF loss: 5 Watt (1.25 Watt for travelling wave) with 250 kV.

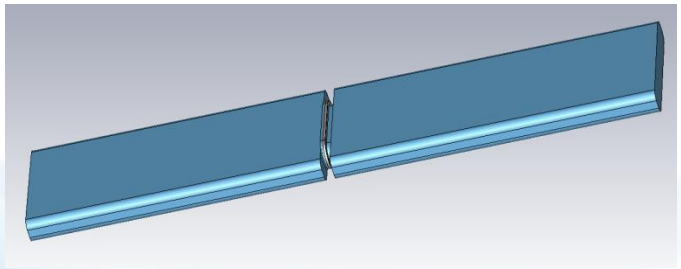

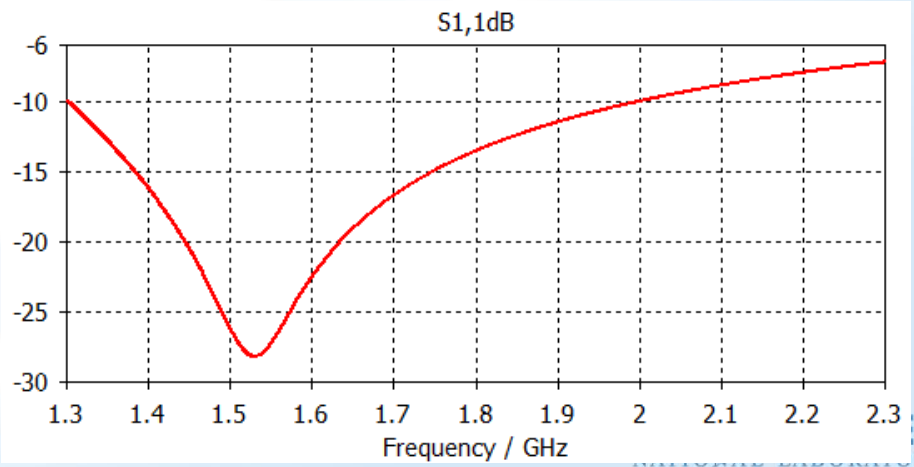

Center cell

			(beta=1)	(beta=1)			
h [mm]	Rd [mm]	f [GHz]	Rsh [ohm]	R/Q [ohm]	Q	E-bound f [GHz]	fh-fe[MHz]
1	57.254	2.1107	2.436E+06	115.076	21168.3	2.04994	60.76
2	56.7332	2.1107	2.460E+06	118.514	20759	2.05655	54.15
2.5	56.4455	2.1107	2.466E+06	120.175	20520.1	2.05971	50.99
3	56.1433	2.1107	2.462E+06	121.703	20233.1	2.06273	47.97
3.5	55.8278	2.1107	2.458E+06	123.185	19954	2.06562	45.08
4	55.5003	2.1107	2.446E+06	124.545	19642.2	2.06838	42.32
5	54.815	2.1107	2.411E+06	126.936	18993.2	2.0735	37.2

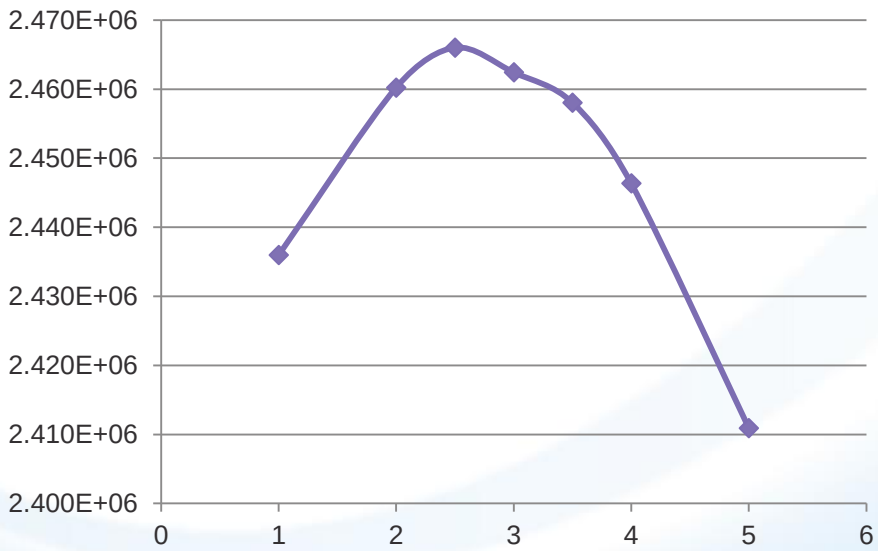

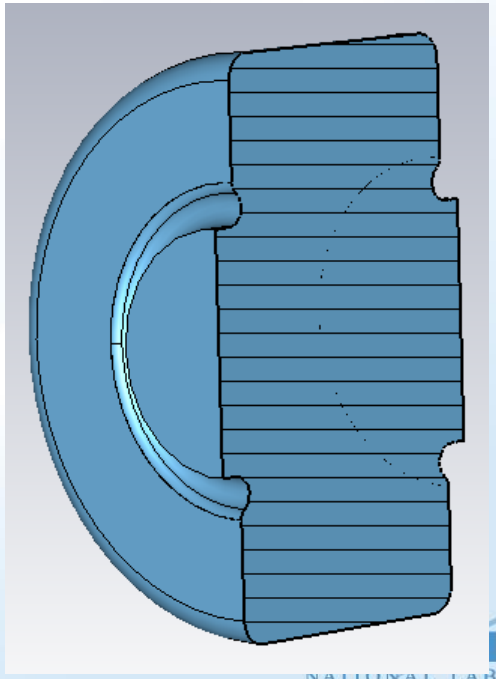

End cell

aperture:	23.8125	radius in mm			
h	2.5	mm			
he	0	mm			
ΔL [mm]	10		(beta=1)	(beta=1)	
r7 [mm]	Rd [mm]	f [GHz]	Rsh [ohm]	R/Q [ohm]	Q
2	56.2459	2.1107	2.715E+06	120.837	22467.9
3.5	56.2981	2.1107	2.702E+06	120.009	22516.3
5	56.3579	2.11068	2.686E+06	119.076	22561.1
7	56.4444	2.1107	2.662E+06	117.713	22613.4

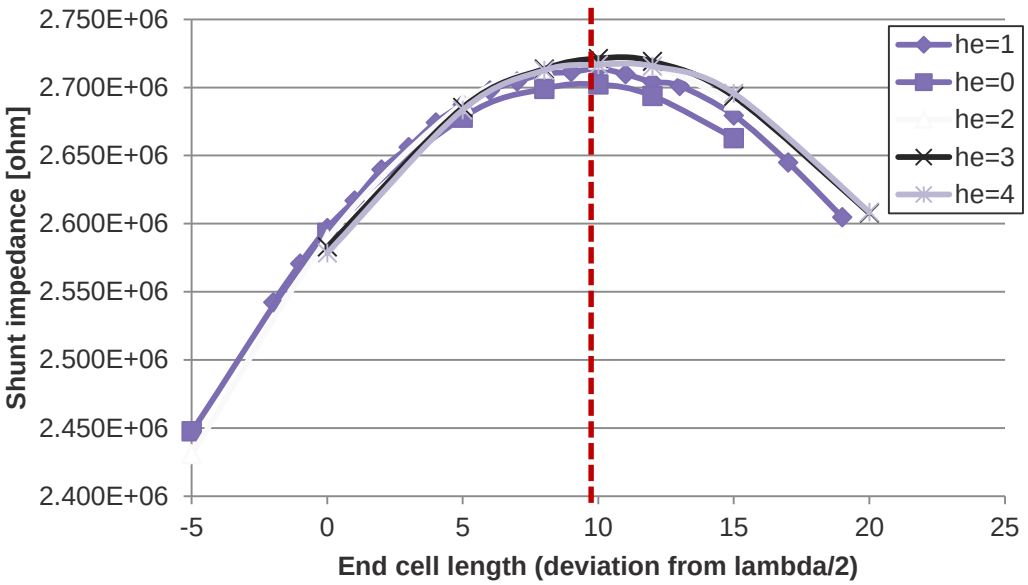

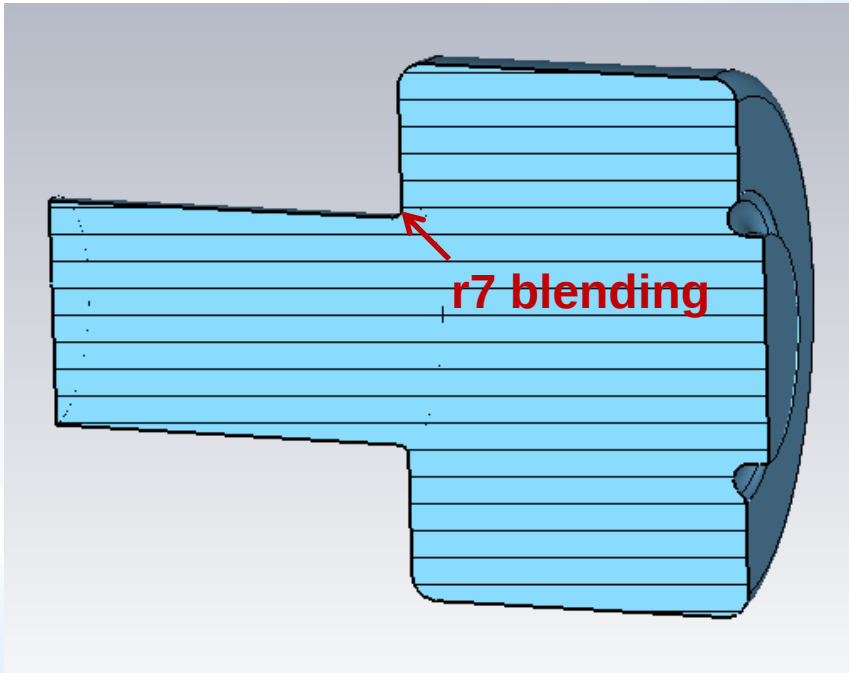

Max E field on the nose cone at 4.17MV/m.

3-cell

- Center cell h = 2.5 mm, cell radius: 55.98 mm
- End cell h = 0 mm with 2 mm blending, cell radius: 54.26 mm
- Fundamental mode: 2.11035 GHz, 6.69 MΩ shunt impedance, power on cavity 9349.1 W.
- SOM separation: 2.0812 GHz π/3 mode (+++), 2.0990 GHz 2π/3 mode (+0-), 2.1105 GHz π mode (+-+).

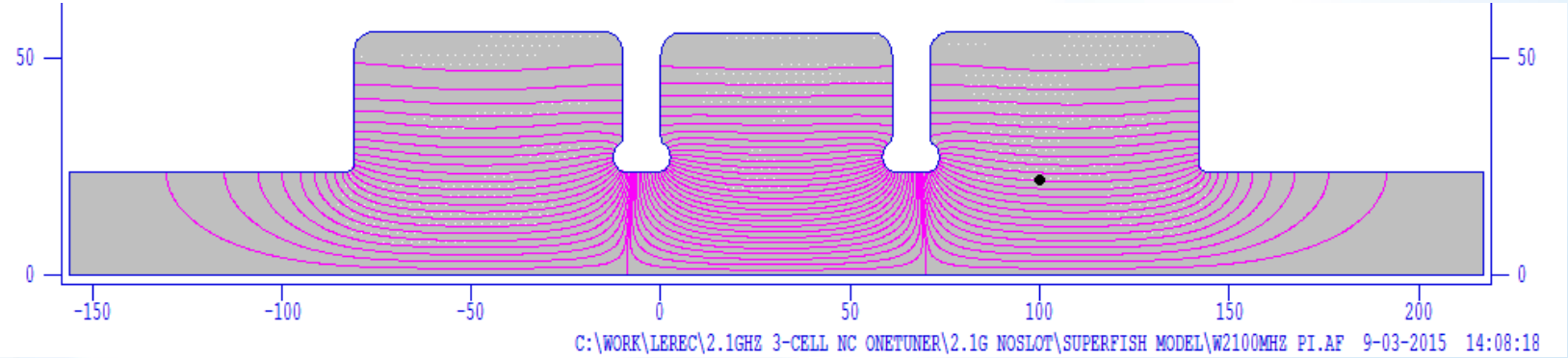

SuperFish model sent to Jorg.

Tuner

Lt [mm]	f [GHz]	R/Q [ohm]	Q	Qext	Qtuner	Rsh [Mohm]	QL	Pcavity [W]	Ptuner [W]
0	2.11032	314.1795	21314	22077	2.38E+06	6.6964219	10844.4	9333.3	83.6
-6	2.109229	312.073	21543	25721	8.66E+06	6.7229886	11723.7	9296.5	23.1
-3	2.10961	313.1065	21468	24269	4.47E+06	6.7217703	11391.4	9298.1	44.7
3	2.11144	315.024	21042	19370	1.34E+06	6.628735	10085.7	9428.6	147.8
6	2.11311	314.0585	20638	16480	8.11E+05	6.4815393	9163.1	9642.8	245.4

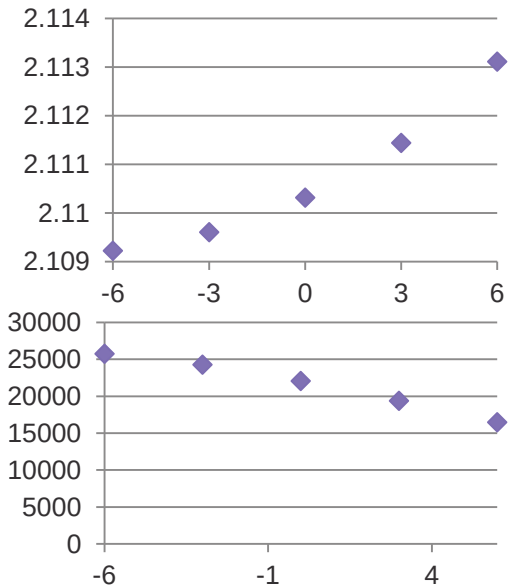

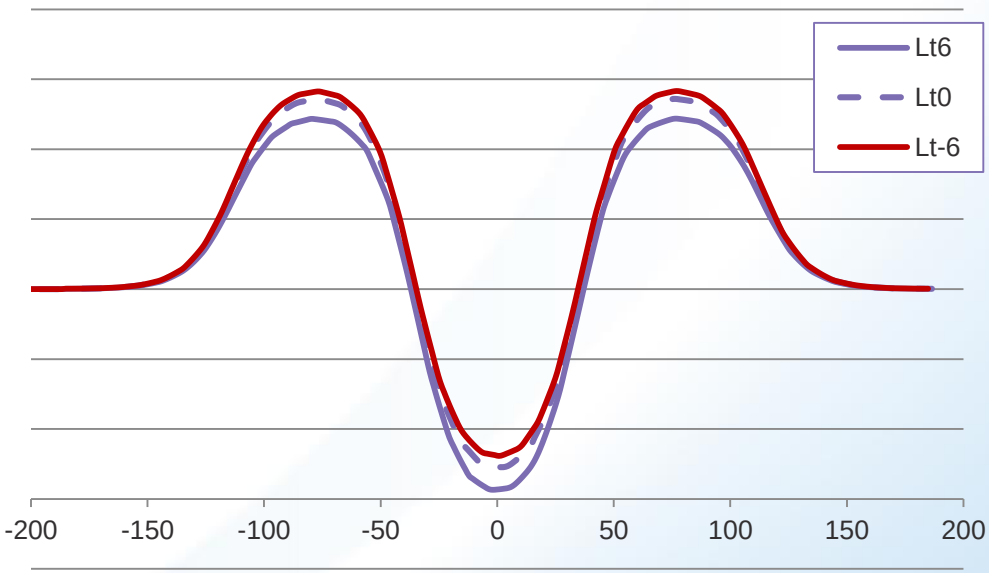

Blending on the tuner changed to 5mm for lower H field.
Max H field on the FPC (not the tuner) blending at 7.9mT

RF loss

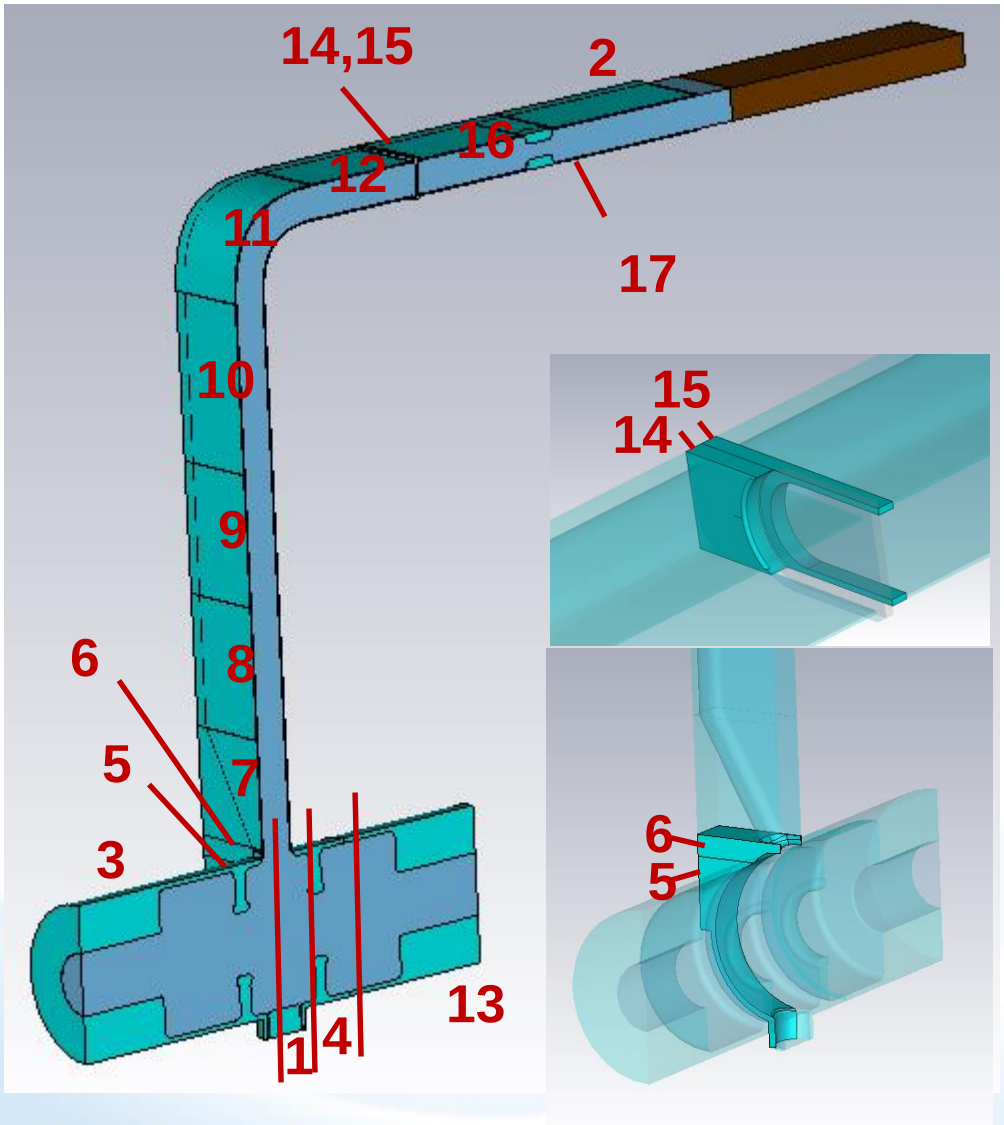

#	Q	Power [W]	SW Power [W]
1	2.35E+06	84.5	
2	5.00E+07	4.0	15.9
3	4.83E+04	4119.3	
4	8.81E+04	2258.1	
5	3.08E+05	645.8	
6	1.61E+06	123.6	
7	1.52E+07	13.1	52.4
8	6.90E+07	2.9	11.5
9	6.89E+07	2.9	11.6
10	5.69E+07	3.5	14.0
11	6.88E+07	2.9	11.6
12	6.99E+07	2.8	11.4
13	1.08E+05	1848.9	
14	1.73E+09	0.15	0.5
15	3.61E+08	0.6	2.2
16	5.46E+07	3.6	14.6
17	1.55E+08	1.3	5.1
	total power	9117.9	

Power

- Cavity works as a decelerating cavity.
- Max RF power needed is <10kW.
- With higher beam current, the RF power needed is lower, till 70mA.

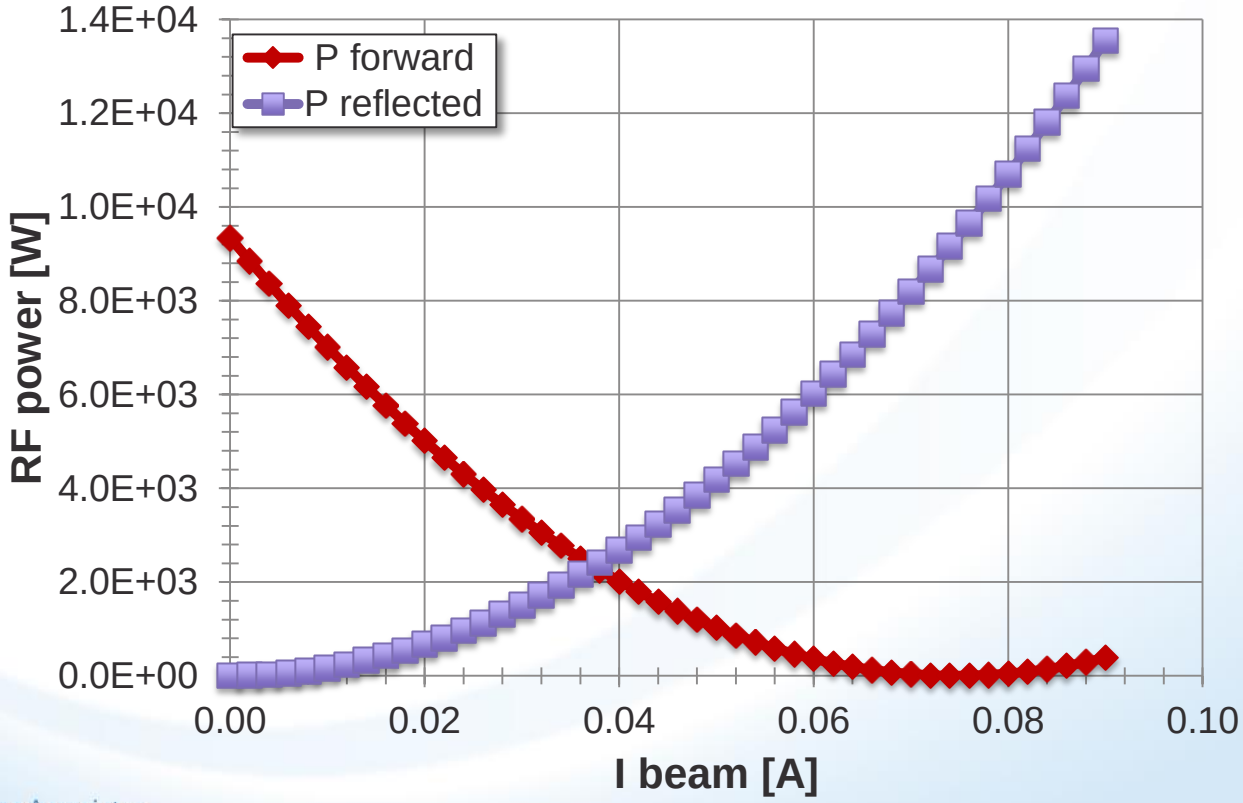

@ Sergey Belomestnykh

FPC tuner

To compensate the possible Q-degradation brought by surface roughness or brazing. We choose FPC stub 0.953” away from the bottom of the flat area on the "V" waveguide, and use two 3/8” or 1" dia threads with 5mm insertion.

Peak E field on FPC tuner is 0.42MV/m

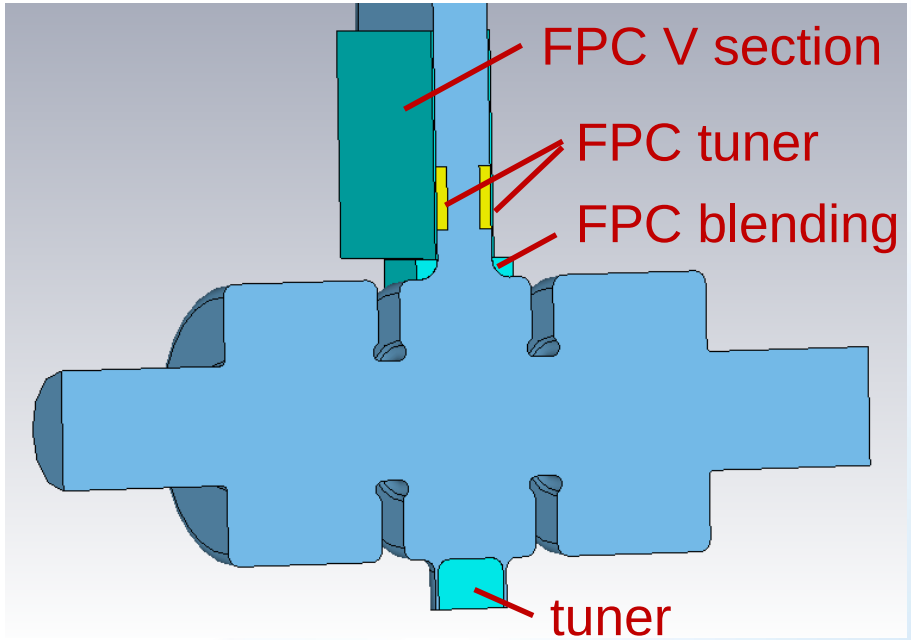

Stub diameter [inch]	f [GHz]	R/Q [ohm]	Qext	Q	Pcavity	Ptuner	P_FPCtuner	P_FPC blending	P_FPCV
0	2.11031	314.2	22138	21304	9338.1	83.5		227.0	18.6
3/8	2.11028	313.6	16287	21286	9362.1	83.0	0.3	228.9	20.6
1	2.11025	312.6	7315.9	21251	9409.7	82.6	2.7	228.4	29.1

HOM

Error analysis

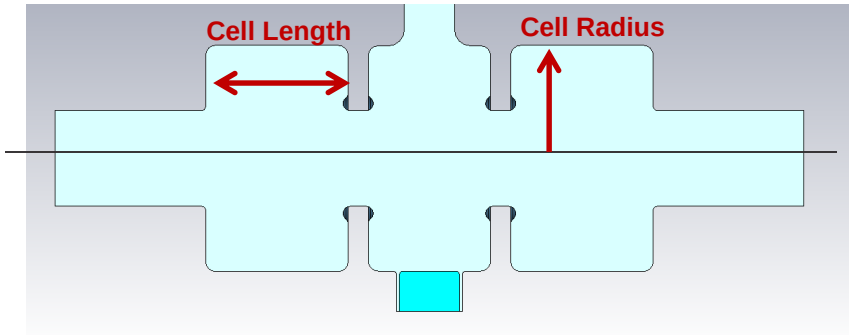

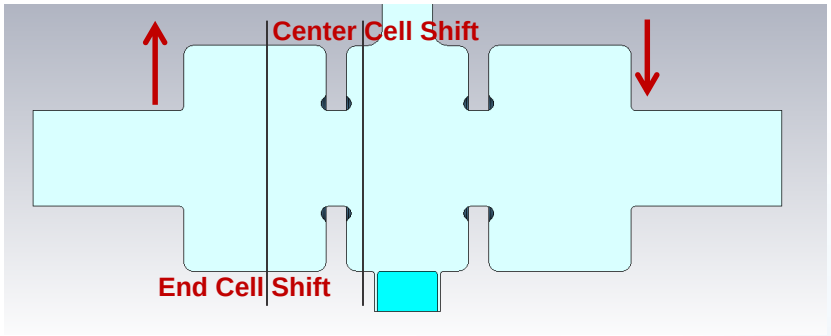

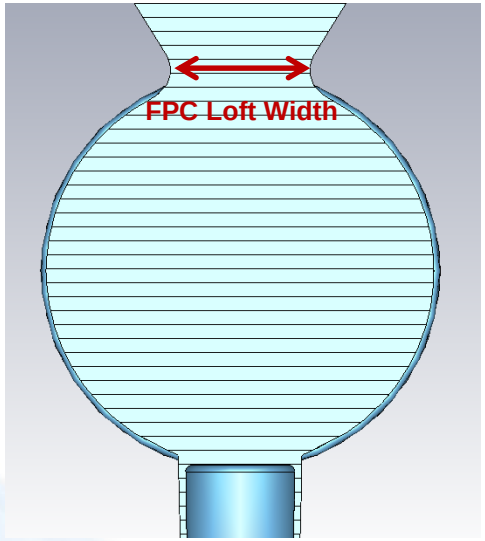

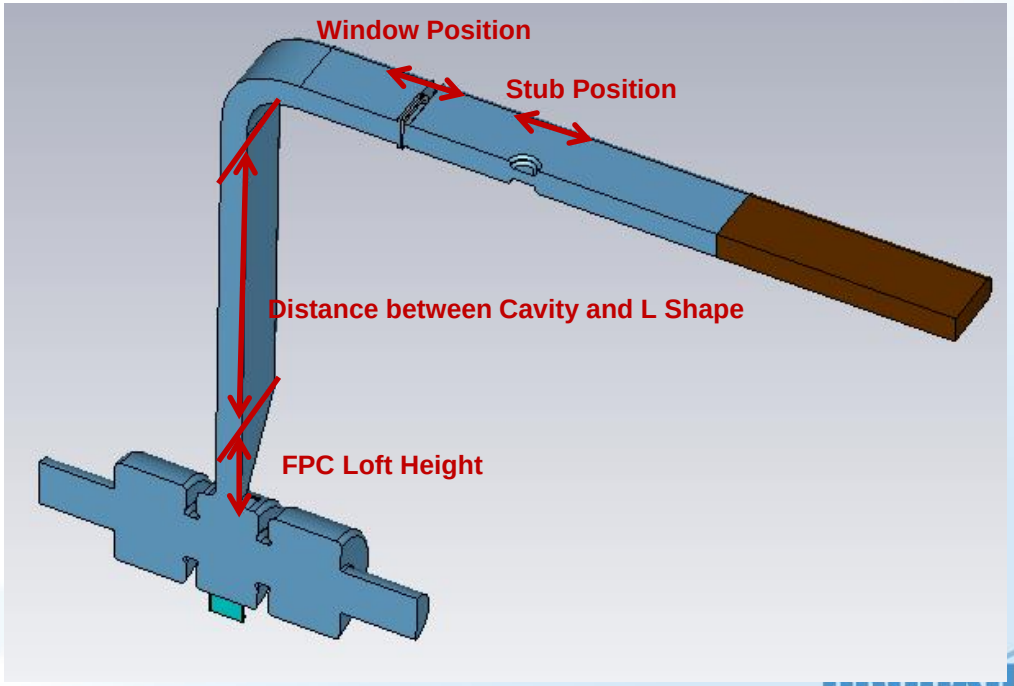

Error analysis (2)

Description	change [mm]	Δf [MHz]	ΔQext
Center cell length	±0.5	∓0.15	±500
Center cell radius	±0.1	∓1.3	±3000
Center cell shift	±0.1	0	0
End cell length	±0.5	∓0.18	∓150
End cell radius	±0.1	∓1.4	∓1500
End cell shift	±0.1	0	0
FPC loft width	±0.1	0	∓300
FPC loft height	±0.5	0	±500
Distance between cavity and L shape	±0.5	0	0
Window position	±1	0	0
Stub position	±1	0	±1000

2.1 GHz warm cavity: frequency compensation

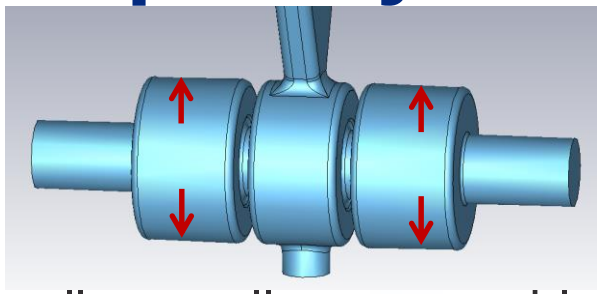

- Machining errors: make the end cells smaller, assemble all components together, measure the frequency, trim the end cells so that frequency is closer to what we want. (May need a few iterations, and trim one cell at a time)
- End cell trimming error (0.005”) ±1.3MHz/cell, error caused by brazing, and cavity temperature caused frequency shift (considering it might not work at 250kV), 0.5MHz from 0 to 250kV (to be confirmed by Cliff): fixed tuner/active tuner.
- Active tuner: -1.4~+2.4MHz, with -6~+6mm tuning range.
- Fixed tuner: 3/8” diameter, 0~+0.32MHz, with 0~+5mm tuning range. (4 on each end cell)

Summary

- There will be two warm RF systems in LEReC: 704 MHz and 2.1 GHz cavities.

For the 2.1 GHz warm RF system:

- 3-cell cylindrical cavity **without** nose cones and coupling slots is designed, and is optimized on shunt impedance.
- FPC, vacuum port for FPC, frequency tuner, fixed tuner and FPC tuner are designed.
- A vacuum pump will be attached to the cavity using a Tee on one of the beam pipe.
- Cavity is fine tuned for field flatness.
- Cavity performance at different tuners' penetrations is evaluated.
- RF power needed and RF loss on the cavity are calculated.

Need to add gauge/arc detector port near RF window, need to design pickup coupler (Q_{ext} 10^8 to provide ~1W power at 200kV, x2)

Thank you!