LEReC INSTRUMENTATION DEVELOPMENT

6-20-15

T MILLER

AGENDA

- **Layout & Beam Functions**
  - Need to finalize instrument placement in Transport!

- **BPM**
  - BPM meeting results

- **Absolute Energy**
  - New electrostatic deflection technique

- Links:
  - Instrumentation Wiki for LEReC:
    http://www.cadops.bnl.gov/Instrumentation/InstWiki/index.php/Low_Energy_Electron_Cooling
  - Meeting presentations found at:
    http://www.cadops.bnl.gov/Instrumentation/InstWiki/index.php/Low_Energy_Electron_Cooling#Meetings

STEPS TOWARD ACHIEVING COOLING

1. Set energy using RF to 10^{-2} accuracy

2. Measure Absolute Energy to 10^{-3} accuracy and readjust to match ion beam energy
   - Primary: 180 Dipole + PM calibrated BPMs up & down stream
     - Requires measuring 180° Dipole field strength to 10^{-3} accuracy
     - Measured reproducability of 10^{-3}
     - We need to buy a magnetic field probe accurate to 10^{-3} down to 180 gauss.
   - Secondary: Electrostatic Energy Spectrometer with dual YAG screen & Optics
   - Back-up: Time of Flight measurement using BPMs

3. Measure beam position and adjust alignment

4. Measure emittance in 3 places and adjust optics accordingly
   - Injection with multislit
   - Upstream of Yellow cooling section
   - Upstream of Blue cooling section

5. Measure energy spread in 2 places and adjust optics accordingly
   - Merger section with only YAG screen
   - Between cooling sections with 180 dipole, upstream slit, reference PM, and downstream PM

6. Look for evidence of cooling, adjusting/scanning energy if necessary

   - Using Schottky Monitor to look for Au^{+78} peak or cooling peak
   - Using Synchronous Kick Recombination Monitor

Scope: Injection

- Beam pipe size shall match ERL devices
- Bake-out to 200°C only
- DC Gun instrumentation :
  - Large Button BPM(s)
  - Profile Monitor in Laser Cross
  - Cathode Camera in Laser Cross

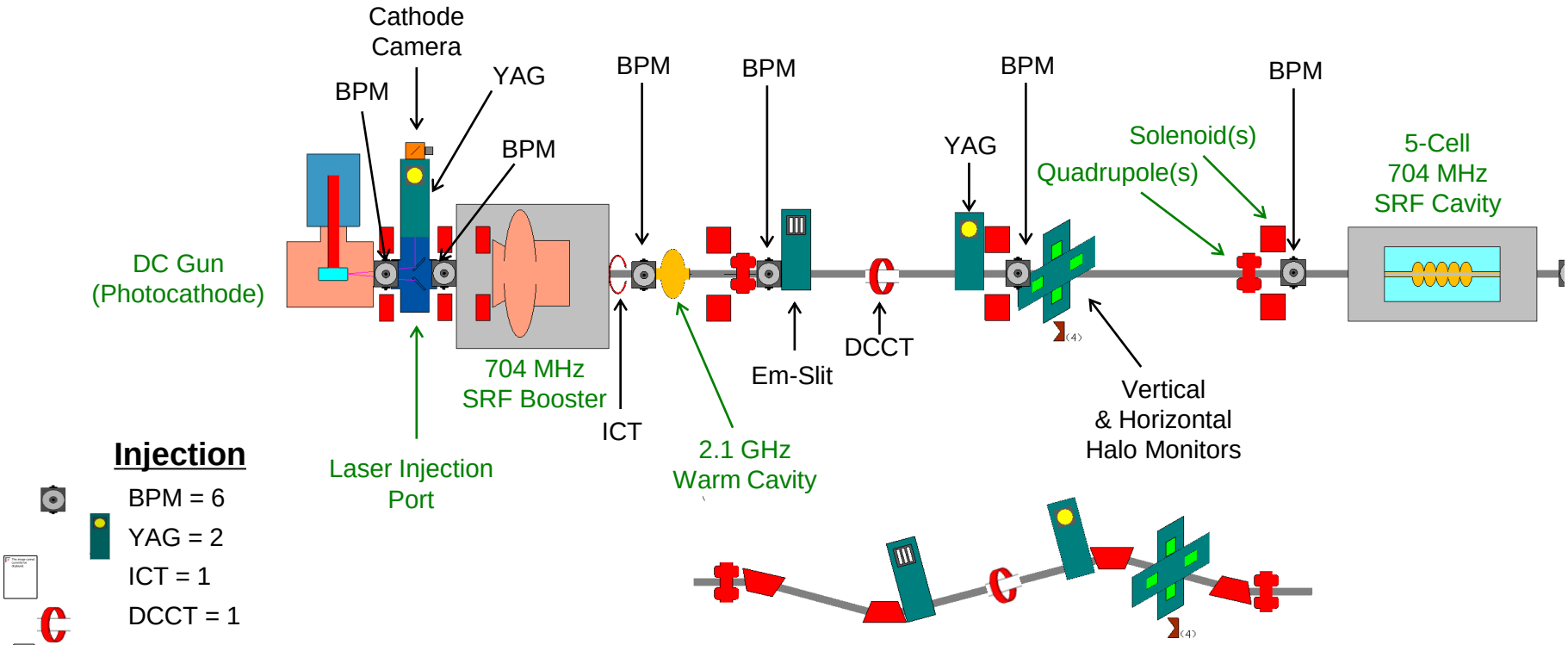

Injection

- BPM = 6
- YAG = 2
- ICT = 1
- DCCT = 1
- Emittance Slit = 1
- Halo Pairs = 2
- Faraday Cup = 4

Scope: Transport

DETAILS:

1. 1st Diag. B/L for commissioning
2. Do we need to add YAG in transport?
3. REVISED LAYOUT BELOW:

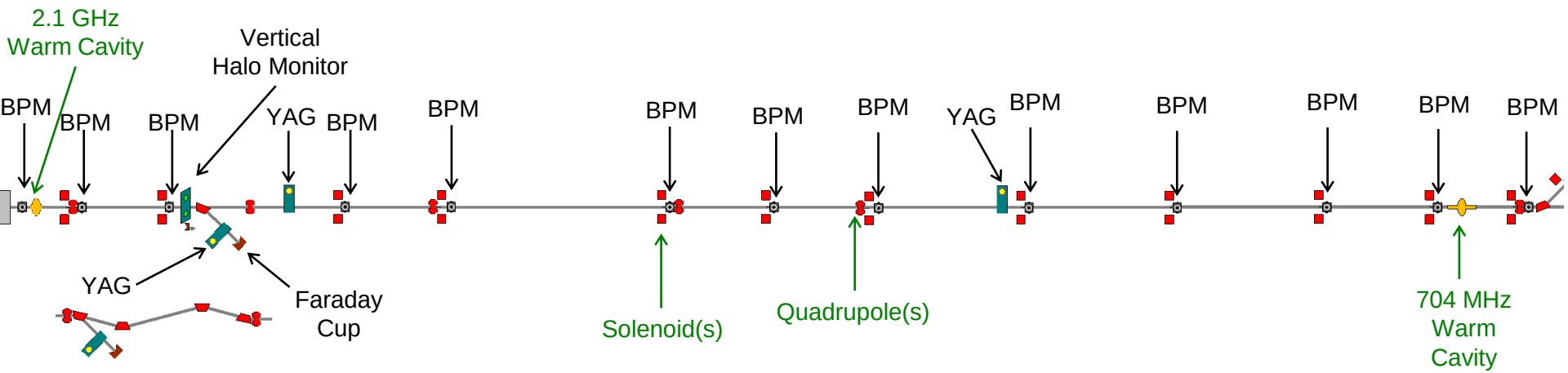

e-Beam Transport

~~BPM = 13~~

YAG = 3

Faraday Cup = 1 + 2

Halo Scraper Pair = 1

Merger & Diagnostic Beam Line

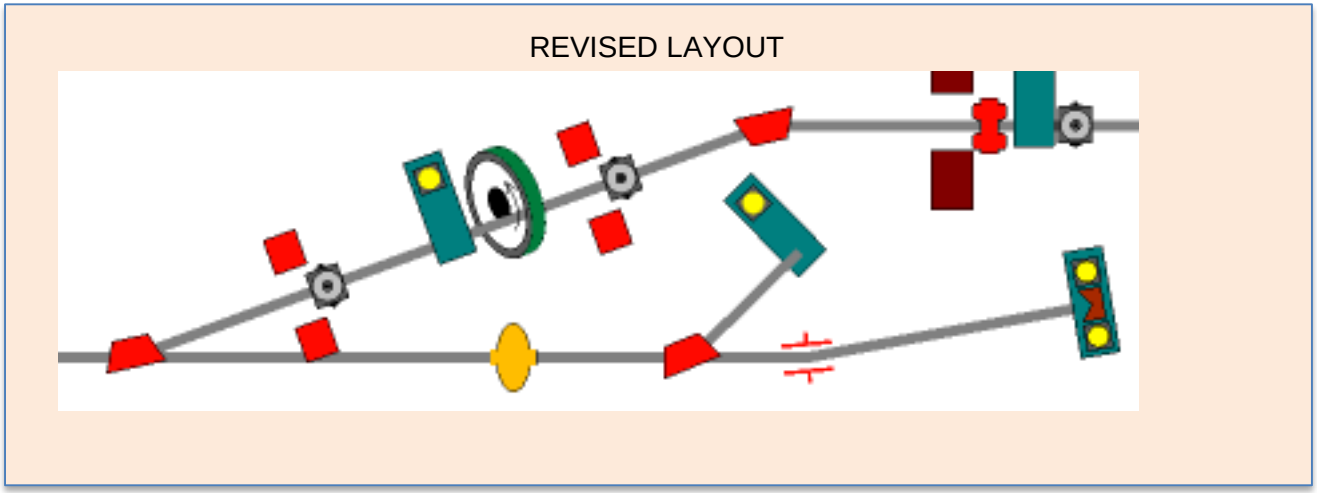

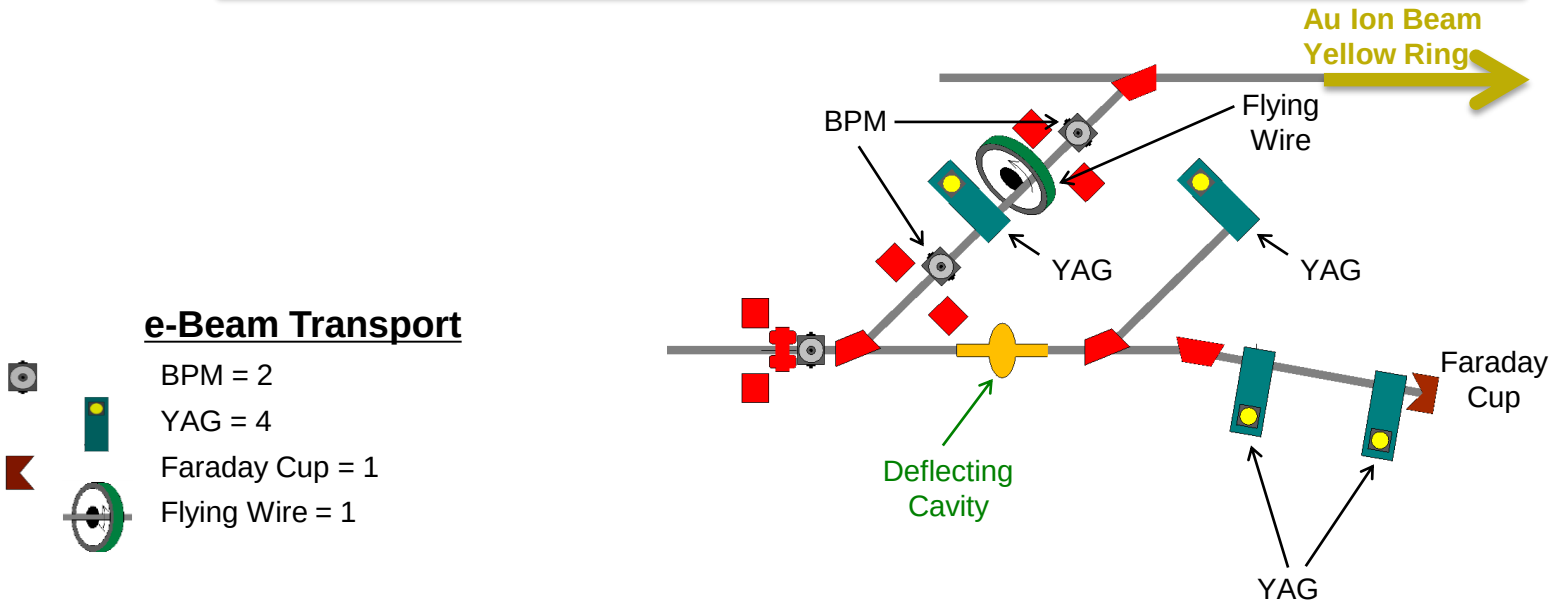

Scope: Cooling Sections

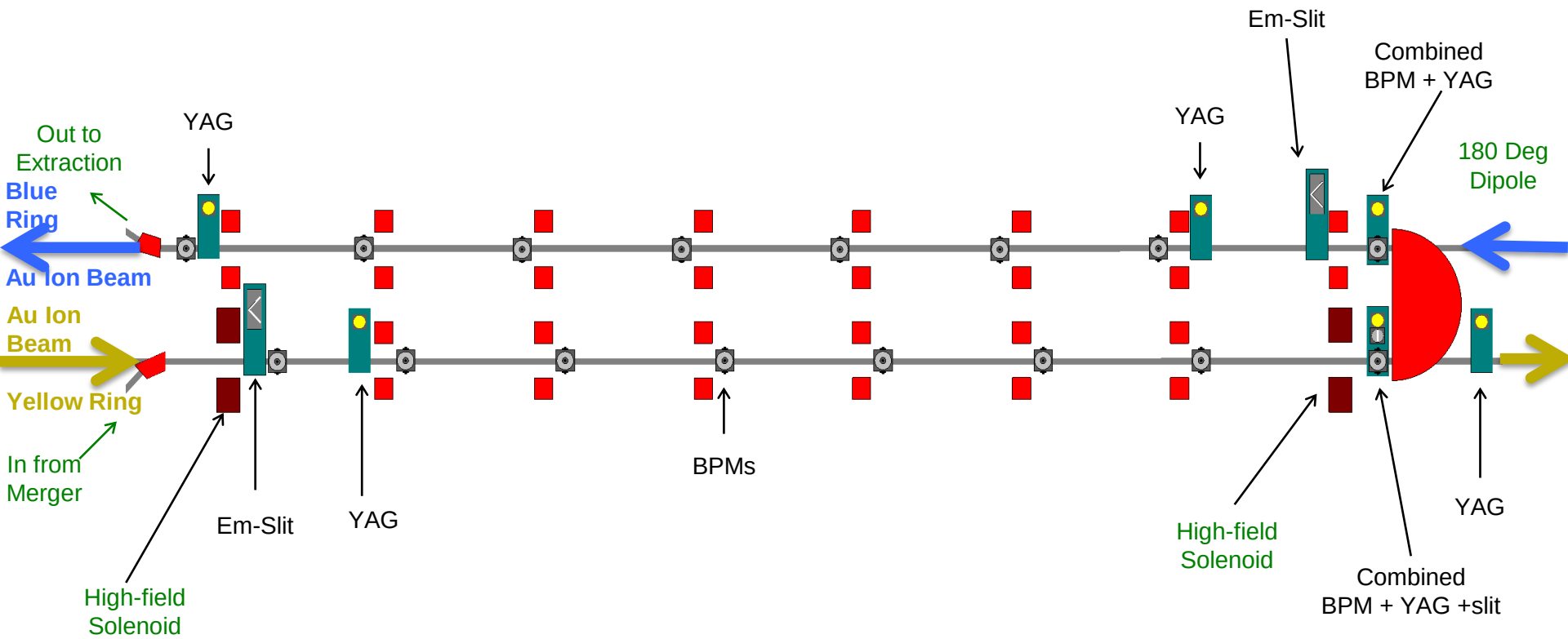

Cooling Sections

BPM = 16

YAG = 6

Scanning Emit. slits = 2

Defining Slit = 1

Extraction

BPM = 1

YAG = 1

DCCT = 1

Faraday Cup = 1

Wire scanner = 1

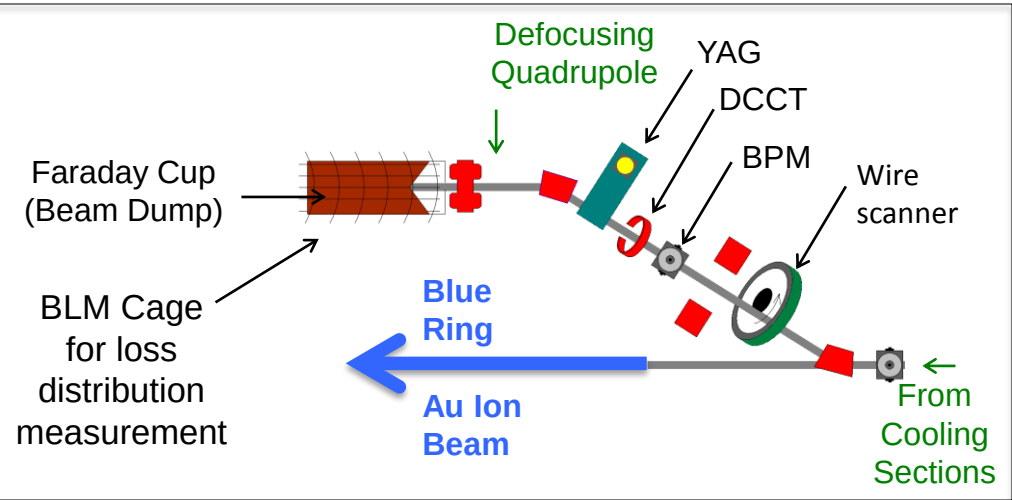

	M. Fedurin	T. Shaftan	S. Seletskiy
Diagnostics	#2 measure beam profiles with full-current-compatible OTR	#1 careful assessment of quantities and capabilities of the various diagnostics under different operating conditions #4 use multiple compact kicker beamlines + full-current-compatible OTR (cooled copper mirrors) #5 study and optimize BPMs based on sensitivity, noise and accuracy #6 consider diagnostics for bunch pattern (i.e. bunch-by-bunch)	#2 proceed with vertical deflecting cavity + bend + full-current-compatible OTR #3 include several laser wires in cooling section
General Concerns	#1 measurement accuracy (180 Gauss level) of 180 deg dipole challenging #3 energy collimator after beam optic redesign	#2 diagnostics specs and placement should be based on detailed beam dynamics analysis #3 beam dynamics analysis should address uncertainty in initial conditions from the gun	#1 “more than any other aspect of project…” be concerned with • providing energy stability (1E-4) • controlling energy spread (5E-4)

Emittance Slit Mech Design

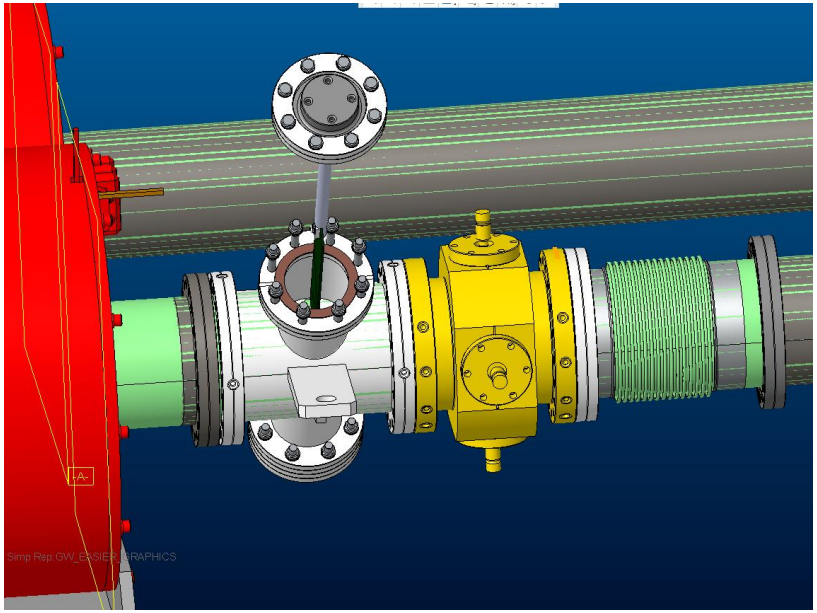

Courtesy Dan Weiss

The attached picture shows the EMS in the beam line. The chamber length is specified in the general system spec. and the flanges are fixed. The scanner port does not allow for the bolts to be inserted from the scanner side into the BPM chamber. There are a number of options to consider.

1. Referring back to the attached picture, there appears to be enough room to increase the chamber length and permit bolt installation
2. use a rotatable flange on the scanner chamber and preinstall bolts into the flange and rotate the flange into position
3. maintain the fixed flange and preinstall the flange with studs prior to assembly
4. move the port off chamber center away from the BPM and adjust the scanner chamber support design.

Our preference is to increase the chamber length if permitted.

Can we increase the length of the chamber by ~1 inch? (YES)

Is there a specific location for the mask plane either relative to the lattice or to the profile monitor that must be maintained?

Cooling BPM Design

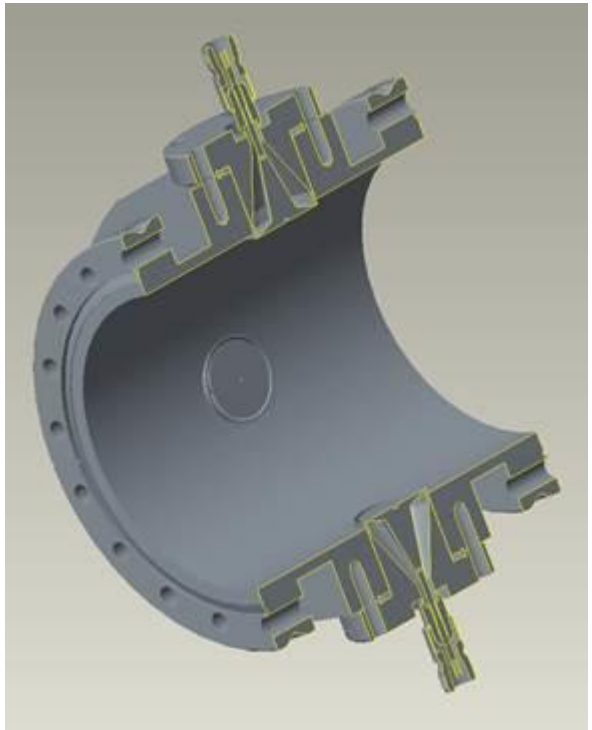

Courtesy Lou S using MPF step files 6-18-15

I've asked Vito to make two more drawings, each with min & max extreme tolerances that shows the full range of possible distances from the side of the button face to the adjacent housing aperture ID. Peter T has tentatively agreed to relax the +0.000/-0.004 as long as the distance of opposing buttons to the beam line center is as accurate as possible (+/- 0.002).

Result range is recess of 0.030" and protrusion of 0.013"

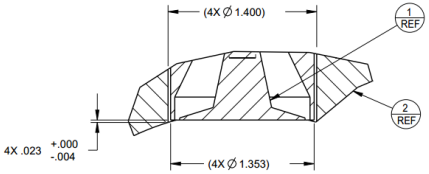

DETAIL A
SCALE 2/1

Need to schedule a Final Design Review with MPF next week.

Before that meeting we need to finalize:

All tolerances and dimensions

The production schedule, present deliver is Feb 2016

If we can have guaranteed acceptance of components without change, we can cut the schedule nearly in half. Please let us know if we can order any or all of any components.

MPF Proposed BPM Schedule

6-18-15

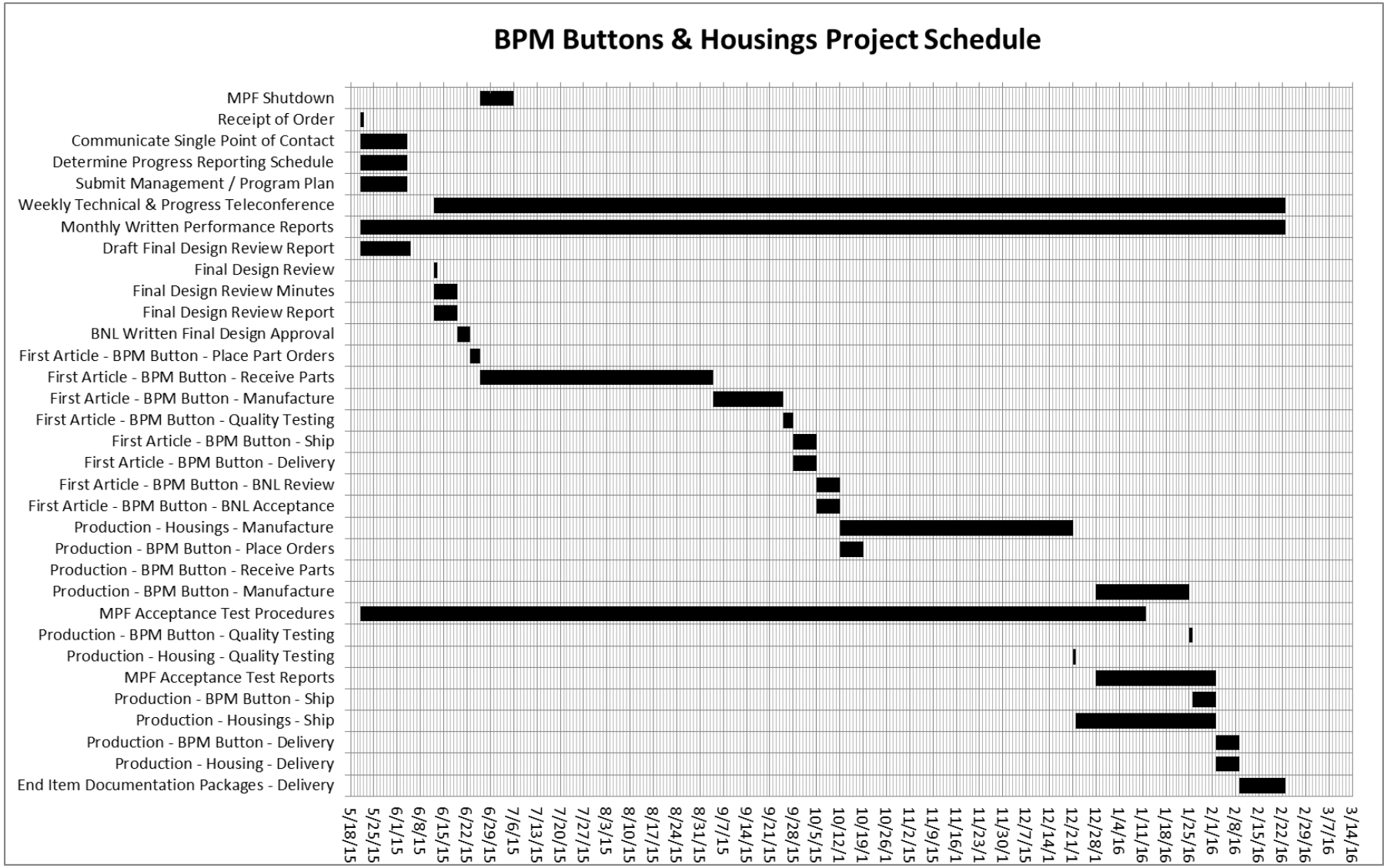

Comparison of output trajectories for the 180° magnet generated by Wuzheng for his models with and without shims.

P. Thieberger

6/16/2015

Output deviations with respect to the central output ray for rays offset by 1 cm at the input

Preliminary conclusions

- The model without shims shows generally similar or smaller deviations in in positions and angles, except for the significant vertical defocusing which is much larger.
- This is the well known fringe-field effect for a trajectory initially perpendicular to the pole-face of an ideal dipole. This is the dominant contribution to the observed quadrupole component at the pole edges.
- We can correct this defocusing term and we are much better off with the solution without shims. High accuracy mapping of a slowly varying field will be challenging enough
- If possible, I would like to perform the same analysis for a model without the fringe field shield.

		WITH SHIMS			
X in (cm)	Y in (cm)	Delta x (mm)	Delta y (mm)	D angle X (degree)	D angle Y (degree)
-36	0	-0.762	0.000	-0.168	0.000
-34	0	0.720	0.000	0.169	0.000
-35	1	-0.266	-0.030	-0.002	-0.001

		WITHOUT SHIMS			
X in (cm)	Y in (cm)	Delta x (mm)	Delta y (mm)	D angle X (degree)	D angle Y (degree)
-36	0	0.099	0.000	0.023	0.000
-34	0	-0.101	0.000	-0.023	0.000
-35	1	-0.360	2.992	0.001	0.227

Impedance matching

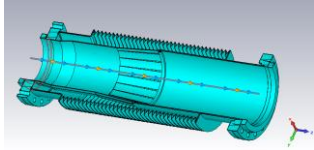

Need 180 deg chamber
& rest of Transport line

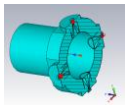

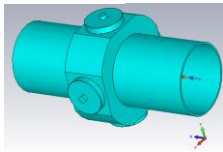

Cooling section energy losses for a 300 pC, 1.5 cm rms long bunch

(180 degree magnet chamber and tow welded bellows not yet included)

DEVICE	Wake loss factor	Wake loss for 300 pC	Count	Total
	(V/pC)	(eV)		(eV)
Toby's hybrid device	6.28E-02	18.84	2	37.68
Profile monitor	2.33E-02	6.99	2	13.98
Emittance slits	1.68E-02	5.04	2	10.08
BPM	5.30E-03	1.59	14	22.26
Welded bellows	9.07E-02	27.21	2	54.42
Formed Bellows	3.00E-02	9.00	18	162.00
180 degree chamber			1	
40 cm of beam pipe	5.70E-04	0.17	1510"	16.40

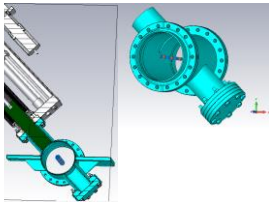

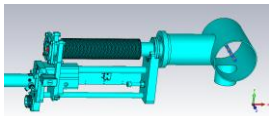

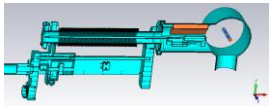

TOTAL 316.82 eV

Estimate of the wake amplitude superposition of the 30 electron bunches using the one-bunch simulation shown on the previous slide. The oscillation amplitude decay is approximated by and exponential. The contributions from individual bunches added in quadrature are elements of a geometric series.

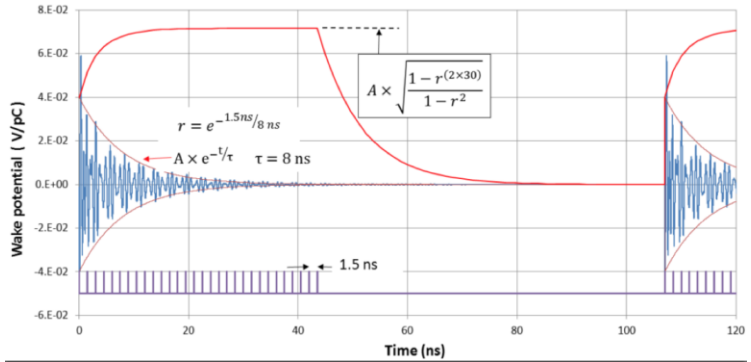

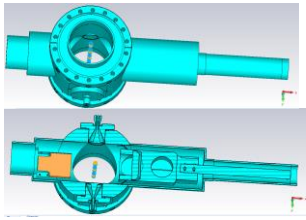

Profile Monitors

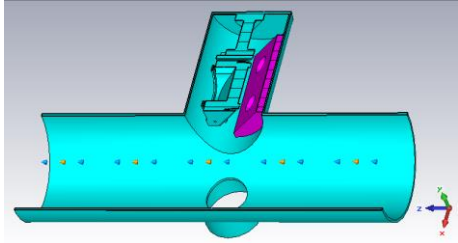

- Cooling Section PMs
  - Vacuum chamber modified
    - Enlarged 1.75” optics port penetration to 2.37” for illumination & ease of fabrication.
    - Simulation shows acceptable results.
  - 100µm YAG current choice
  - Ferrite temp rise due to 19mW => 2.2°C (low enough to disregard)
  - 20cm Radius of Mu Metal puts optics assembly ~20cm away from YAG crystal

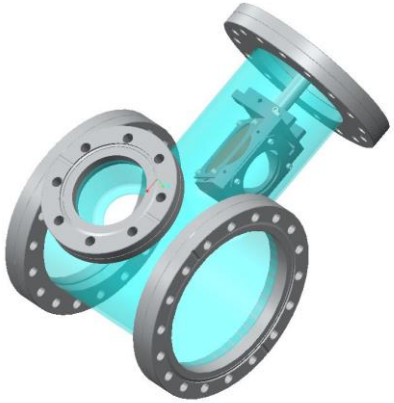

- Transport ERL PMs
  - Beam size (4mm sigma) in TWO transport PMs too large for 25x15mm YAG
    - require redesign of YAG & holder for TWO PM’s
    - Location of 25x15mm YAG PMs needs to be determined
      - All in transport (2 with modified – larger – YAG crystals)
    - Need beam size simulation in energy spectrometer beam line
  - Cage in all 5 ERL PMs will require modification
    - Addition of ferrite rings
    - May require single contact point in vacuum

ERL PM With Ferrite only

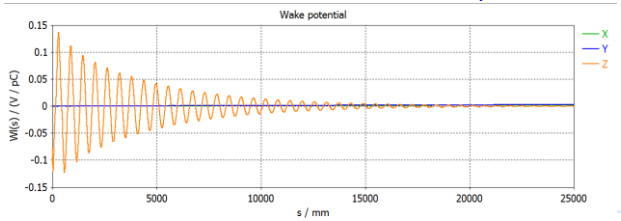

ERL PM With Ferrite & contact point

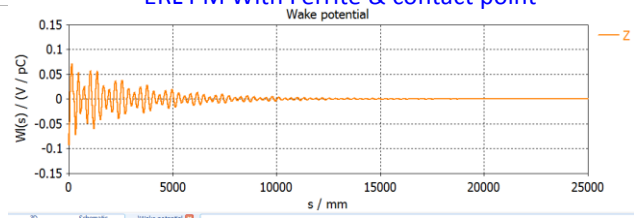

25x15mm YAG

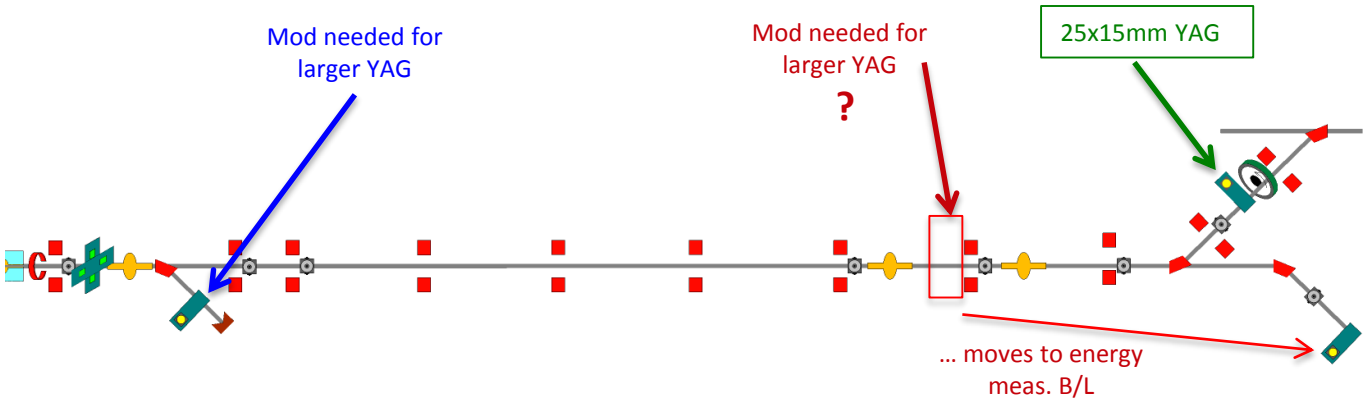

40mm YAG

Modified BPM + YAG Study

- Design Details:
  - Single plane BPM in smaller chamber
  - Three position actuator for YAG + Slit
  - 45mm YAG crystal actuated into chamber
  - Impedance simulation calls for ferrite in window port

- Used for BPM Calibration:
  - Fiducial points around YAG for reference circle
  - Beam spot center compared to ref. circle to find offsets
  - Offsets entered in BPM electronics

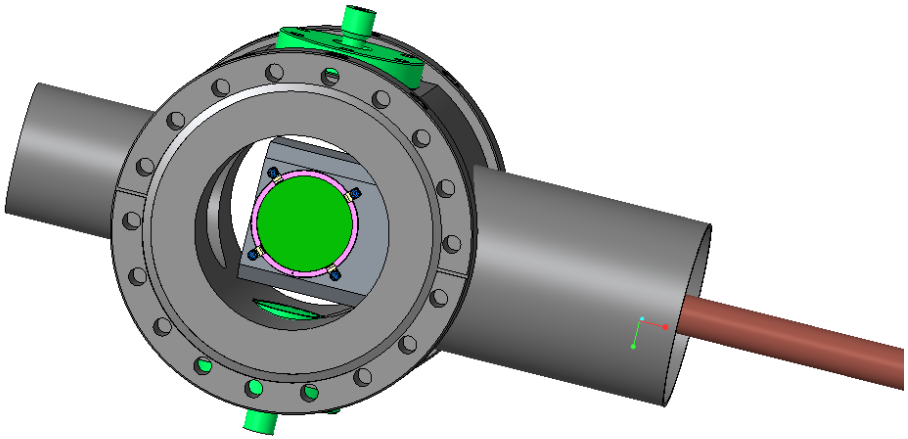

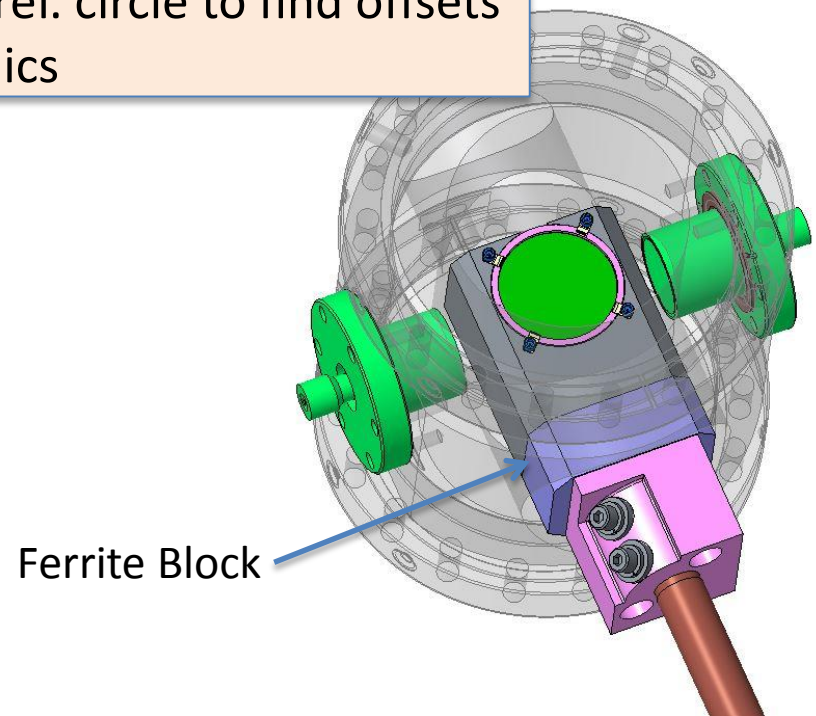

Emittance measurements

- Measurement Scheme
  - Injection Section: H+V slit mask (1.6 – 2.0MeV). Compromise design for energy range required
    - Mask design needed
    - Spacing to PM: 2m for low energy, 1.5m for high energy
  - Cooling Section: Dual scanning slit upstream of PM.
    - 45 Deg linear scan of horizontal and vertical single slit mask, positioned just after the first solenoid in **each** of the cooling sections.
    - New vacuum chamber design complete
    - Alignment:
      - » 1 degree fabrication/installation tolerance (1 degree => 30% reduction in 150um aperture in a 1mm thick mask)
      - » 5 miliradian dynamic tolerance during operation
    - Camera sensitivity requirement calculations - underway
    - Simulation to ensure 10% measurement
      - » Simulation results from Chuyu predict a measurement **to 5%**

Beam Position Measurements

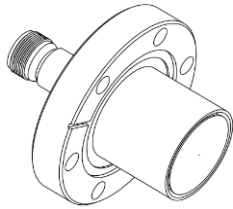

- Accuracy of relative measurements: 50 microns. [Per M. Blaskiewicz, e-mail 01/23/15]
- Accuracy of absolute measurements: 1 mm. [Per A. Fedotov, verbal 01/30/15 meeting]
- Accuracy of absolute measurements: 0.7 mm near 180 deg. Dipole to support absolute energy measurement [Per M. Blaskiewicz, LEReC Instr. Meeting 4-16-15]
  - **Q? Commissioning** with single bunch or single bunch train?
  - 50um stability requirement of electron beam relative to ion beam
    - Two independent beam position measurements result in a factor √2 worse
    - 1mm absolute position wrt beam pipe center requirement for electron beam

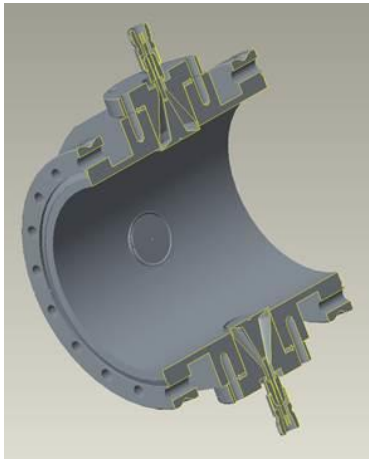

Courtesy Lou S using MPF step files 6-18-15

- Scheme: Dual Electronics with tailored front end filters
  - Electrons: 700MHz BP front end filter + Band Pass Pre-Amp
    - Additional pre-amp needed to boost 100µV signals with 30pC bunches
    - Filter will ring from one electron macrobunch through to the next
    - Electrons in the cooling section will be measured during the abort gap
  - Ions: 39MHz LP front end filter
    - Measurement of single bunch per turn averaged over many turns
    - Requires skipped electron bunch alternated through all RHIC bunches
  - Expected frequency response mismatch between electron and ion electronics shall be mitigated by calibration with beam and cable swapping to determine offsets.

  - Slow position feedback to dipole magnets required – some simulations and investigation by physics is needed.
  - Failed RHIC BPM in sector 1 at 2530.87 m may need replacement. Q/ Importance to LEReC?

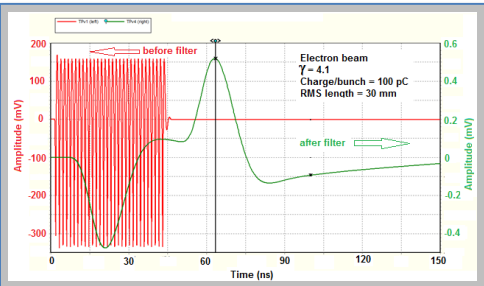

Previous simulations made for using 39MHz filter for both ions & electrons…

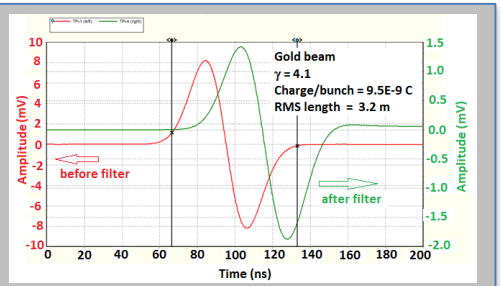

Energy Spread Measurements

- Method: Profile Monitor (no slits)
  - In merger before cooling section
    - beam sizes in the Dog-Leg merger (with dispersion) are simulated to be 0.2x1.2mmσ (VxH) with one upstream slit compared to 1.2x3.6mmσ (VxH) *without* using a slit -> suggests no slit needed before merger!
  - In 180 Deg dipole between cooling sections
    - Requirement of dipole field measurement? Precision of 10^{-3} **IS** good enough?
    - Jorg's simulations showed horizontal dispersion of 2¼ X vertical beam size, based on strong solenoid focusing before the 180 dipole without using slits. **(*see next slide*)**
      - The high field solenoid at the end of the blue cooling section shall be moved to the end of the yellow cooling section, just before the 180 dipole. *Bucking coils will not be needed in this magnet.*
    - Laminated vs solid core for field uniformity:
      - hysteresis test done – analysis shows repeatability of 10^{-3} => consensus is to continue with **solid core** magnet procurement.
      - Field quality measurement NOT made. This will require mapping with an ultra-sensitive probe. Results to predict quadrupole & sextupole errors in the field quality.
      - Axial scan done – axial profiles look the same in all the 5 scans, but this is on a very coarse scale. The integral field, however, shows excellent reproducibility with a standard deviation of 0.02%, which is comparable to measurement errors at this low field, and is well below the required 0.1%.
    - Simulations of sextupole components in 180 dipole.
      - Results shown on next slide

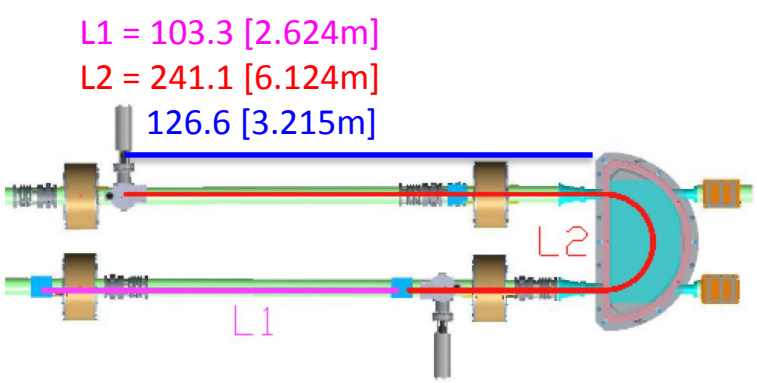

Energy Spread Measurements

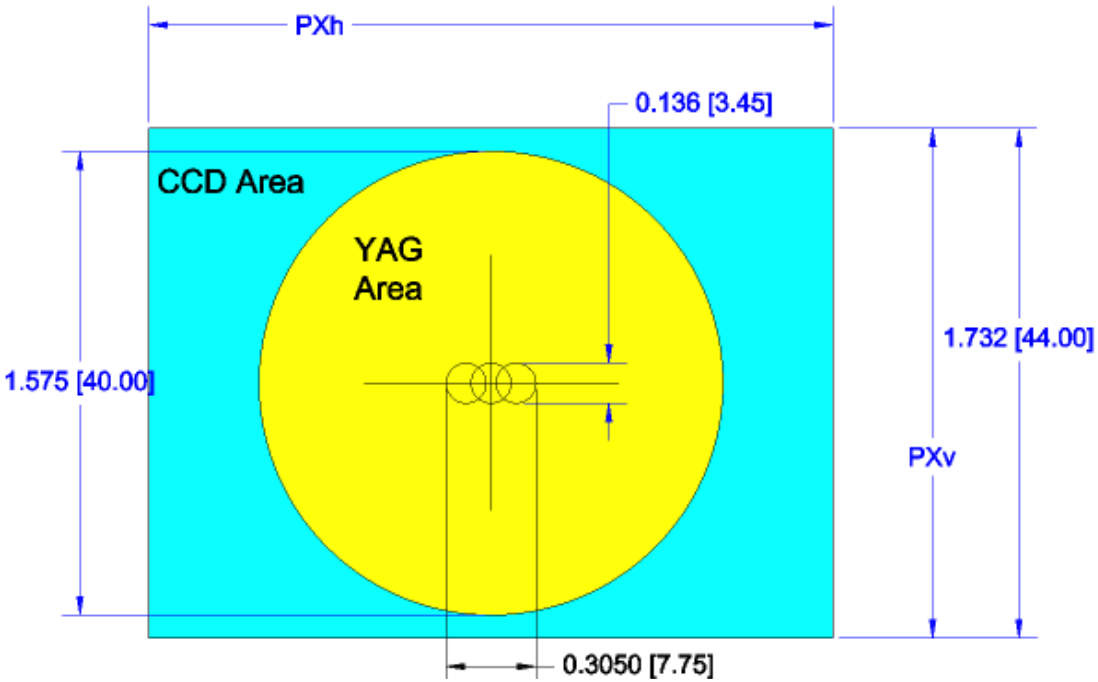

Simulations (J. Kewisch)
3-26-15

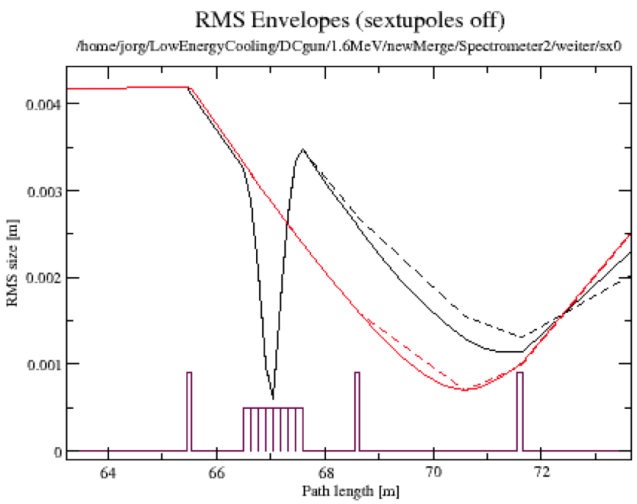

Simulations (J. Kewisch) 3-26-15
without sextupole field errors

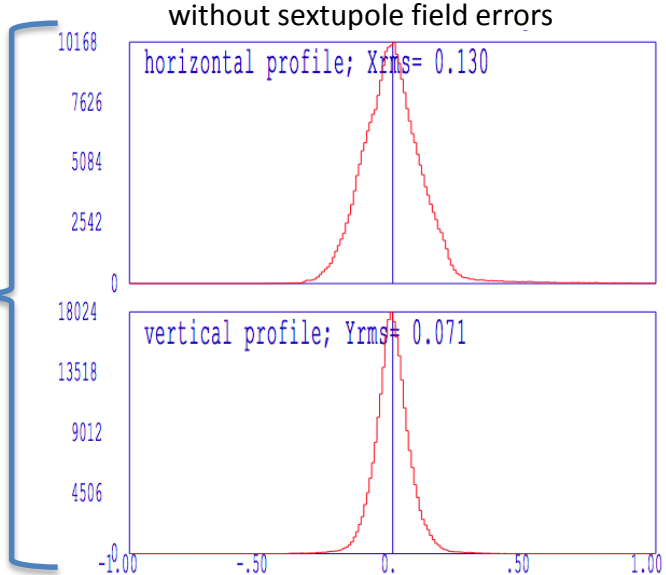

The rms size is 1.55 mm horizontal and 0.69 mm vertical.
$\Delta p/p = 1.7*10^3$. (Beam sizes shown at 2.5 σ.)

Measurement Resolution:

- σ_δ = 1.30 - 0.71 = 590µm
- Resolution = σ_δ / $Pitch_{YAG}$
- 590µm / 45µm/px = 13 px

➔ **7.62%** Resolution (dispersion measured in 13 discrete elements = 100%/13)

UPDATED

Enhanced Energy Spread Measurement

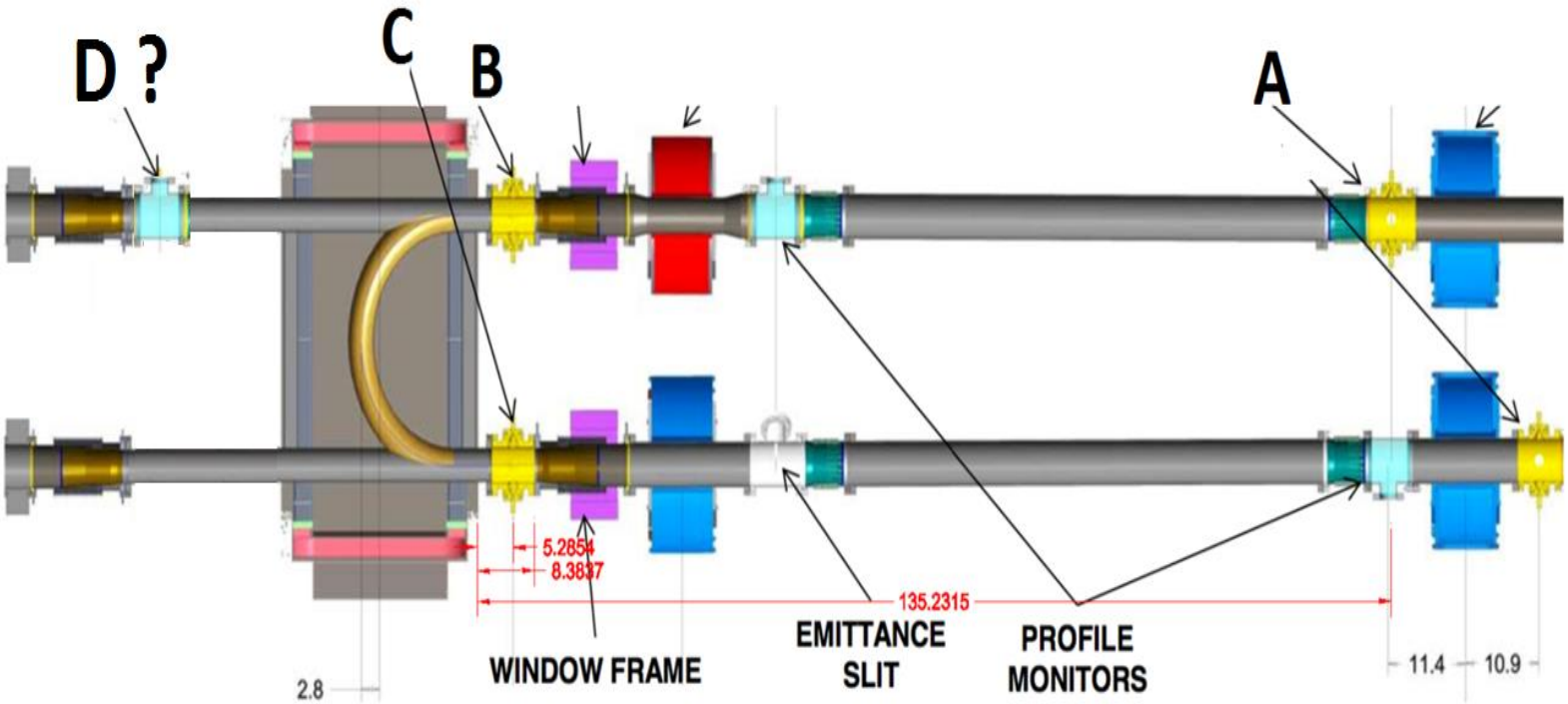

1) Install a slit on the YAG actuator in B
2) Install a profile monitor D at a distance BD equal to the trajectory length from B to C

A better energy measurement would result with a smaller image at C
A better energy spread measurement would result by comparing beam spot widths at D and C. The red solenoid would not need to be strong and could have steering correctors.

Absolute Energy Measurement

- Energy Matching & Recombination Monitor may suffice…
- Current approach:
  - Dual YAG screen (+/- deflection)
  - 1.5 kV deflecting electrodes
  - Calibration using Tandem ion accelerator

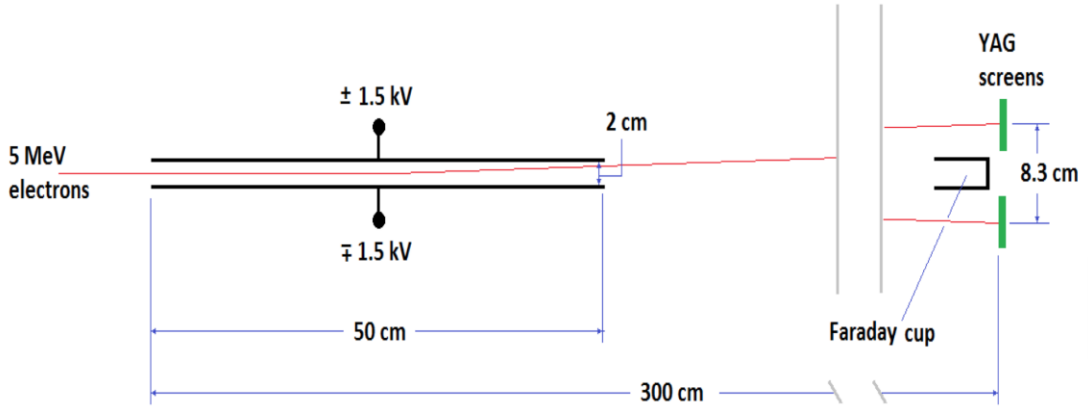

- Detailed study requried

Absolute Energy Measurement - ToF

- Ion/electron time-of-flight difference across cooling section using BPM signals
  - For pick-up electrodes separated by 10 meters total time of flight is about 30 nanoseconds and therefore we need to have accuracy 0.03 picoseconds. (I. Pinayev)
  - We do not need *absolute accuracy* of 30 fs, only r.m.s. phase noise and short term stability over 1-10 minutes (I. Pinayev)
  - LLRF integrated phase noise (jitter) spec is on the order of 200fs rms measured over a 100kHz bandwidth. In a 1Hz bandwidth, integrated jitter would be uh, substantially (K. Smith)
  - Employ *very low BW* phase difference measurement
  - Measurement easier at $\gamma = 2 - 4$.
  - Need to bench-test the effect of "long" pulse vs. 10fs pulse on this method with long cables. (P. Thieberger)
  - Suggested use of specific fill patterns where there are ions and electrons at the same time, just separated longitudinally (by populating desired buckets); providing both ion and electron TOF measurements simultaneously. The short term drift effects are then further minimized. (K. Smith)
  - Presentation made by Igor Pinayev 2-12-15
    - Test set-up that can be installed on two buttons of one BPM station in RHIC to collect statistics on measurements of noise and systematic error in the system.
    - Signals from two separate BPM stations will suffer form effects of differing frequency content during rebucketing. This is more complicated than the single BPM test in that a position signal is derived using two - not just one- pickup signals (so convoluting timing errors with the response of each electrode) [M. Minty]

Absolute Energy – Time of Flight (Cornell's Approach)

- Cornell uses ToF from all BPMs for relative phase measuremnt
  - 1 - 2° of phase measurement is easy and 0.1° is possible with high bunch charge and averaging over many bunches
  - Alexei stated that 7ps at 1.6MeV is required instead of 0.03ps (as previously suggested by Igor).
  - Igor cited ESRF's phase **monitor upgrade** to their BPMs
  - Jorg's suggested measuring 400keV energy in cooling section. It isn't possible to propagate the 400keV beam that far.
  - ToF measurements may need to be done only at low voltages and close to the gun. Which BPMs to be used for Gun energy measurement?
    - Need 2 BPMs spaced 2m apart
    - Need to measure dt of better than 2 – 4 ps for phase diff:
      - gamma=1.78, beta=0.8 (400kV): dE/E=1.6e-3
      - gamma=4.1, beta=0.97 (1.6MeV): dE/E=9.7e-3
  - "To get better than 1e-2 for the high energy with gamma=4.1 we would need either improve phase measurement accuracy better than 1 deg. (4ps) which sounded possible from Cornell people or calibrate booster cavity is steps using lower voltages and then extrapolate to 1.6 MeV. This could be complimentary to the measurement with the spectrometer magnet, which is also done at Cornell at 5-6MeV, so it should be possible to get information on these measurements as well."

Absolute Energy Measurement with 2 BPMs

Colwyn Gulliford
Cornell

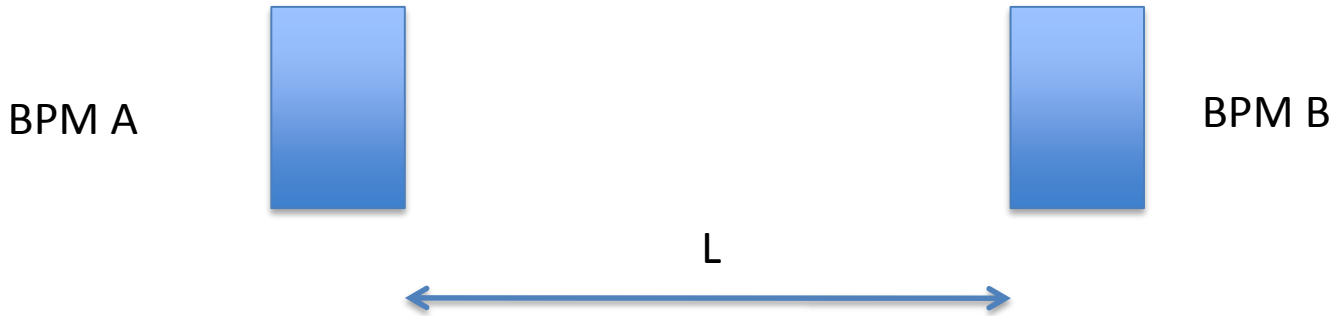

For identical BPMs: $f_A = \omega t_A + f_0 \quad f_B = \omega t_B + f_0$

$$\frac{\Delta\phi}{\omega} = (t_B - t_A) = \frac{L}{c\beta}$$

$$\gamma = \frac{1}{\sqrt{1 - \left(\frac{\omega L}{c\Delta\phi(\pi/180)}\right)}}$$

For:

- drift length of 0.75 m (keeps phase change < 360 deg for simplicity)
- E = 2 MeV
- f = 704 MHz
- δL, $\delta\phi \sim 10^{-4}$ -> $\delta\gamma = 0.003$, requires knowing the phases to 0.07 deg

For non-identical BPMs: $f_A = \omega t_A + f_A \quad f_B = \omega t_B + f_B$

$$\frac{\Delta\phi}{\omega} = (t_B - t_A) + \Delta\phi_{BA} = \frac{L}{c\beta}$$

Do measurements at different energies:

$$\frac{\Delta\phi_1}{\omega} = (t_{B,1} - t_{A,1}) + \Delta\phi_{BA} = \frac{L}{c\beta_1}$$

$$\frac{\Delta\phi_2}{\omega} = (t_{B,2} - t_{A,2}) + \Delta\phi_{BA} = \frac{L}{c\beta_2}$$

$$\frac{\Delta\phi_2}{\omega} - \frac{\Delta\phi_1}{\omega} = \frac{L}{c}\left(\frac{1}{\beta_2} - \frac{1}{\beta_1}\right)$$

Option 1: if β1 is known (say, from the gun voltage), then:

$$\beta_2 = \frac{\beta_1}{1 + \beta_1 \frac{c}{\omega L}(\Delta\phi_2 - \Delta\phi_1)}$$

For:

- 350 kV reference energy with $\delta\gamma_1 \sim 10^{-4}$
- Desired energy of 2 MeV
- Drift length of 1 m
- 704 MHz
- $\delta\phi$, $\delta L \sim 10^{-4}$

Implies $\delta\gamma = 0.002$, but requires 0.033 deg BPM phase

A second approach is to do two measurements where the relationship between The energies is known:

$$g_2 = a g_1 \qquad a = \frac{x_2}{x_1}, \qquad a = \frac{V_2}{V_1}$$

Math is more complicated, but can still compute δγ…

Just an example:

- For energies E1 = 2 MeV and E2 = $\delta\gamma_1 \sim 10^{-4}$
- Desired energy of 2 MeV
- Drift length of 2 m
- f = 704 MHz
- $\delta\phi$, $\delta L \sim 10^{-4}$
- $\delta\alpha \sim 10^{-3}$

Implies δγ = 0.002, for 0.03 deg BPM phase as well (roughly the same)

Phase Measurement

- Deflecting cavity for longitudinal phase measurement with Profile Monitor
  - Need quote for cavity & for RF driver
  - Can PM be shared with S.A. Energy Meas. B/L?
  - Pulsed Stripline vs. RF cavity

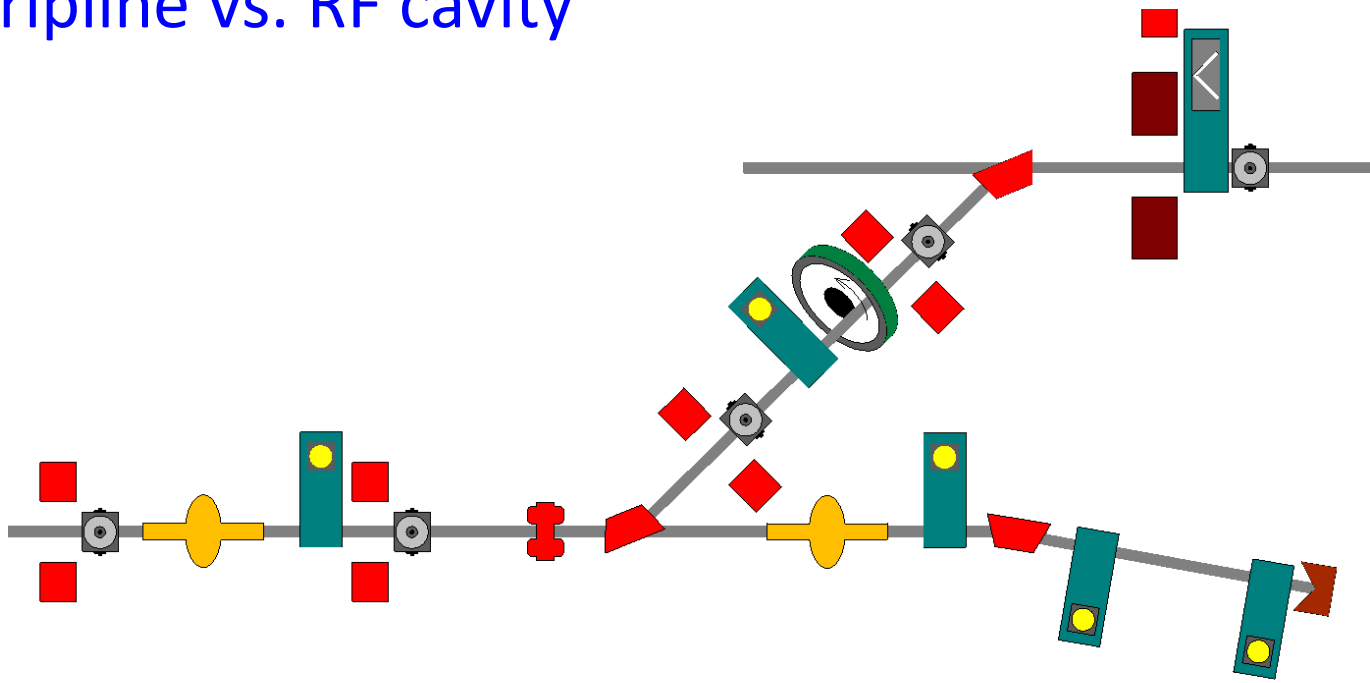

Longitudinal Phase Space

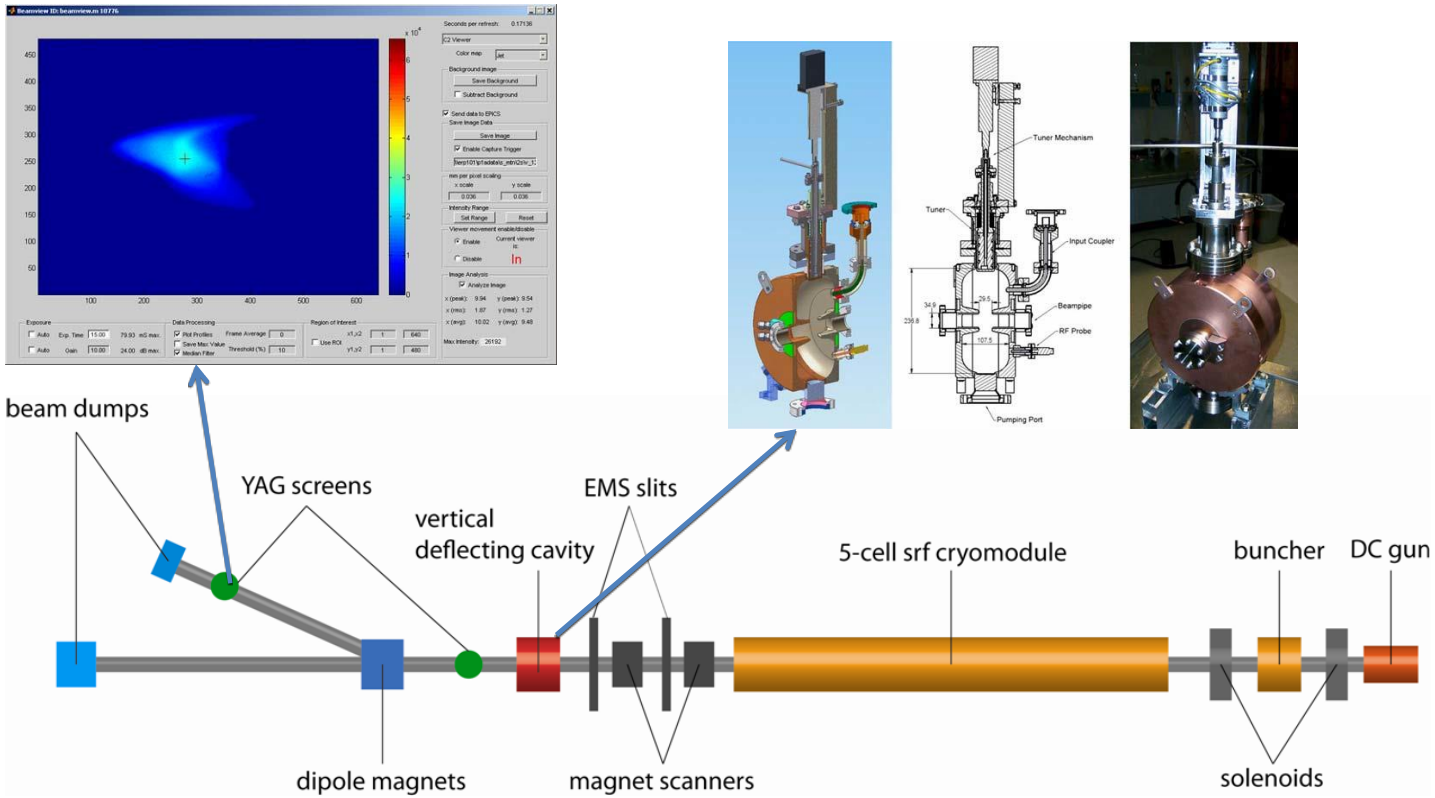

Easy to get a direct measurement of energy spread vs time

Bruce Dunham Cornell University

Courtesy of Burce Dunham

Energy Matching

- Schottky Monitor
  - Calculations show that the 250 MHz Schottky pickup will work. [Mike Blaskiewicz]
  - gamma=4, gammat=25 then eta= 0.0609. The revolution frequency is 76 kHz so the maximum half width is df=35kHz . Take f=250.e6 .
  - Then gives dp/p = +/- 2.3e-3 which is above the 1.e-3 we plan to dead reckon.
  - 2.3e-3 is ABOVE the 1.e-3 we plan to dead reckon. This give a factor of 2.3 safety margin.
  - The alternative method is the 2nd line in the Schottky Monitor BUT will require very good signal/noise ratio.
    - Mike Blaskiewicz will provide some calculations.
      - Looking at existing longitudinal Schottky measurements it looks like we have a dynamic range of about 40 dB. With a recombination time of 60 hours we have 1.e-4 of the beam in the 78 charge state in 22 seconds. We would have a 10dB measurement in 220 seconds. The big question here is dynamic aperture. Yun Luo tested the 10,000 turn dynamic aperture with dp/p = -0.013 and found it was OK. Checking the 22 second = 1.7 million turn dynamic aperture would be helpful. (M. Blaskiewicz, email 5/21/15)
    - A mock-up bench test was suggested using a BPM being removed this summer
    - Reconfiguring the resonant BPM for a sum/diff measurement for better signal was suggested

- Consider df/f=-eta*dp/p. This gives dp/p = +/- 2.3e-3 which is below the 1.e-3 we plan to dead reckon.

Bunch Length Measurements

- Schemes:
  - LOLA-like (transverse mode deflecting cavity) ß we should document why this idea has been rejected
  - inferred from energy spread and misphasing of cavities
- Physics simulations required to identify method to pursue,

Notes from this meeting (8-20-15)

- **BPMs:** Simulations of signal intensity with the new 30mm buttons have been modeled but for using the RHIC 39MHz input filter.
  - Much discussion was made over the decision to use separate input filters for electrons and ions. – A meeting dedicated to BPM electronics is needed as soon as possible.
  - We could not work out how cable swapping will overcome the difference in frequency response of the two systems.
  - Mike added that a well designed (3 or 4 pole) LPF for the ions should be able to completely ignore the 700MHz component of the electron macrobunch. If this is true, one set of electronics should be sufficient to respond to both electrons and ions.
  - An ion clearing gap is expected to turn off electrons for 1 – 2 turns every 100ms. Ions could be measured in this gap but may provide insufficient sampling for a good average.
  - RHIC is reported to have ~15um turn-by-turn position resolution (without averaging). If this is true, we shouldn't need any averaging here.

- **Absolute Energy:** Electrostatic energy spectrometer depiction in layout should have FC element in line with beam with the two YAGs left and right of the beam.
  - The measurement should be made after the transients in the RF cavities have settled to a steady state. This means that the beam would have to be absorbed by the FC (beam dump) for up to 1s before it is kicked to each YAG and held momentarily before returning to the FC beam dump.
  - This puts high power requirements on the FC design.

- **Longintudinal Phase** measurement with RF kicker needs to have the profile monitor on its diagnostic beam line turned up into the vertical plane.

NOTES From Last Meeting (8-16-15)

- Michiko pointed out the need for a beam function plot showing longitudinal phase space

- For the diagnostic beamline after the 5-cell to be useful, we need to create dispersion at that point.

- The addition of y-chambers with kickers after each RF cavity was discussed but the damage to the beam impedance by the Y-chambers was pointed out as a discouragement.

- We need to finish the machine impedance budget summary. We can estimate 1 bellows for every solenoid and/or on each side of the RF cavities.
  - A redesign of the bellows shield may be necessary to remain within budget.
  - The smaller transport beam pipe (1.87”ID) doubles the effects on impedance
  - Note that the merger beam pipe is 2.5”ID
  - The Wire Scanner may have a smaller aperture of 1.38”; this needs to be redesigned (by Cornell).

- Modeling is needed for all devices in the inserted position to estimate the effects of charge buildup to the fast response of the devices (Screens & Slits).

- Peter presented his proposal for an electrostatic deflection energy measurement (Slides in separate presentation).

Notes from previous meeting (8-6-15)

- BPM: Update as per Jorg's lattice design calls for 38 BPMs instead of the 32.
  - Rob Michnoff explained (outside of the meeting) that the cooling section electronics will need to be single units per BPM instead of the previously suggested dual modules with different front end filters for Au and electrons. This may offer some savings in increasing the number of BPMs in the system.
  - Peter T's simulations predict only 0.1mV signal from the BPM buttons for the 25pC e-beam.
  - Alexei explained the motivation of low charge operations is that the system can operate and achieve cooling with all solenoids turned off with the the bunch charge reduced to ~30pC; thereby reducing the complexity of the optics during early commissioning.
- FC: M. Fedurin's suggestion of monitoring OTR from a polished FC surface needs design work for an instantaneous power of 250kW on the FC surface. Alexei asked us to reach out to Misha for help with this design.
  - Peter T. suggested the use of a thin foil that would not melt installed before the FC.
  - An alternative would be the installation of additional wire scanners in the transport line.
  - The addition of a FC feature to the custom profile monitor planned to insert into the laser cross was suggested to give a basic commissioning tool very close to the gun.
- The energy spectrometer beam line should be mirrored so as not to hit the tunnel wall.
- Absolute Energy: Igor's Small Angle Spectrometer was discussed. Care must be taken to correctly measure the field integral with a long rotating coil along the angle that the beam will be bent to properly account for the large fringe fields.
  - Igor suggested that the angle may be small enough to disregard and measure the field integral along a straight path. Peter T. wasn't sure the error introduced would be small enough
  - This system requires further detailed design. However it is a back-up plan only and competes with the feasibility of the Time of Flight system implemented in the BPM electronics which still needs to be designed.
- CRITICAL MEASUREMENTS WITH RISKS
  - ABSOLUTE ENERGY
    - Principle Method
      - 180 Dipole magnet with upstream & downstream BPMs calibrated by integrated & surveyed YAG screens
    - Back-Up Method
      - Time of Flight measurement implemented in BPM electronics with extrapolation to high energy – NOT DESIGNED YET…
  - ENERGY SPREAD (are these two methods different enough to be considered back-up?)
    - Principle Method
      - Slit + 2 PMs with and without dispersion
    - Back-Up Method
      - Focused round beam on PM after 180 dipole with comparison of H/V beam size
- ENERGY MATCH: This is indicated by recombination, which is proportional to $\Delta E_{e\text{-}Au}$.
- PHASE MATCH: A lock-in amplifier may be needed to capture the phase of the long ion bunches for accurate comparison to the phase of the short electron bunches.
  - An electronics platform needs to be chose for this measurement.
- Igor suggested an electrostatic deflector for the energy spectrometer beam line. A 50mm gap between electrodes will have to be controlled & known to a ~10μm accuracy. However, dealing with the strong electrostatic principle & fringe fields are much easier than the weak magnetic fields. This idea warrants further investigation.
- Added instrumentation:
  - Diamond Loss Monitor to the 180 Dipole
  - Magnetic field monitor in the 180 Dipole
  - 4 axes of motion to the gun solenoids
- Post Meeting Thoughts:
  - Sergei Seletskiy's recommendation to pay close attention to monitoring energy stability suggests the need for continuous measurement of beam energy with relatively fast response. → This shall be done with the hybrid BPMs up & down stream of the 180 degree dipole.
  - Sergei also encourages fast kickers with OTR imaging Faraday cups after each RF cavity. Can this be done in an inexpensive way?
  - Sergei recommends online profile measurements in the cooling section. Options are wire scanner and laser wire.

Notes from Previous Meeting 7/16/15

- Beam line instrumentation layout was discussed and needs to be further updated.
- Beam pipe from DC gun needs to expand to largest reasonable (~4” dia. Maybe) up to booster to accommodate beam expansion due to space charge before reduced by booster. DC Gun must have a tapered nipple. The Booster is installed backwards for it’s larger aperture in the rear (~2” vs ~5”).
- Clearing electrodes are expected to be a necessity.
  - Using BPM buttons is not efficient due to small area and interference with BPM electronics.
  - Long wire electrodes were suggested but need simulation to determine effect on impedance.
  - Need physics simulations to estimate ion accumulaion rates.
- Two BPM buttons for DC gun need to be mounted inside large aperture solenoids due to space constraints.
- Should have 2 PM’s for DC gun to align beam through solenoid centers. There is no space for this!
  - Colwin’s paper from Cornell discusses this technique. (He will be at BNL for 2 weeks in August.)
- HTSSol in ERL booster is needed. 2nd solenoid after DC gun is added in case this HTSSol doesn’t work.
- The Emittance Slit measurements have to move to after the 5-cell due to space constraints.

Notes from Previous meeting 7-9-15

- There are now a total of 4 regular type PM's in the cooling section (one downstream of the 180° dipole and two hybrid PM+BPM units and a total of 14 regular BPM stations plus the two in the hybrids.
  - 5 standard PM actuators currently on order.
    - Actuator for hybrid may have shorter travel… need to check… No, the same…
    - Need additional 3-pos actuator for the PM+Slit+BPM hybrid device
- Alexei presented updated layouts for the transport beamline and full machine.
- We need to make a Wake Potential Summary of Results with signatures of approval to put on the Wiki. So far, all simulations of Wake Potentials for beam-line devices are approved for fabrication.
  - Worst offender are the bellows. Design optimization may be required for bellows in transport line.
  - Need a column in the summary table for RMS energy loss.
- We need to make a summary of flange gap types
- Effort to reduce bellows to one per BPM to mitigate wake potential causes concern of angular alignment errors of BPMs. Igor pointed out that BPMs are mounted at 45° in some machines intentionally. Peter was concerned about the effect at multiple frequencies. Peter T. will simulate error due to angular misalignment of PUEs.
- Igor suggested using a stripline kicker with HV Pulsed PS for the instead of an RF deflecting cavity to measure the longitudinal phase. This device (RF or stripline) shall be mounted in the diagnostic beamline downstream of the 1st dog-leg dipole along with a profile monitor.

Notes from 6-25-15 meeting

- In general the instrumentation designs for the cooling section are converging. Peter T continues to work on the hybrid BPM simulations. Alexei suggests the shielded bellows (have about quantity = 20) also be simulated as other labs had problems with their shielded bellows.
- Wusheng continues to work on the 180deg magnet design, Peter T's simulations are helping advise regarding the use of shims.
- Vito reports that the profile monitor and emittance slit heads (aka "Inserts") are being fabricated in central shops. The actuators are on order.
- Minor but necessary decision is which way the profile monitors plunge in from, top or bottom? (any conflict with stands ?)
- Peter T encourages more progress with the magnetic shielding design that is needed to cover the majority of the beam line.
- We will need to prepare ourselves in advance to have a high quality magnetic field monitoring/mapping facility to measure the 3m mock-up cooling beam line section. These parts and development likely have a month or more lead time.
- Gary W asked for mechanical descriptions of candidate profile monitor cameras, he also asked for suggested part numbers for profile monitor view ports, these need to be metalized to drain any collected charge from the e-beam
- Wolfram recommends we think through the machine protection strategy in the cooling region. Specifically in the 180deg bend. He suggests placing one or more loss detectors inside the magnet gap along the bent beam pipe. Since there is a magnetic field there, PMT or ion chambers might be problematic or impractical. He suggests another type of x-ray detector such as a diamond crystal that can function well in a variety of magnetic fields.

Notes from (6-18-15) meeting

- Joe T asked for an updated drawing of the cooling region (without YAG in cooling region just before the extraction beamline), I updated the cartoon on the slides and asked Gary Whitbeck if he has a better more accurate version.
- Alexei recommends we include a second wire scanner in the extraction beamline, this is the advice from folks at Cornell based on their experience with beam profile increase as the beam power is increased. The device design can be copied from Cornell and the cost is ~$5k. I reminded that Bruce Dunham warned that the PMT detector for the wire scanner might pick up backscatter x-rays from the nearby dump, Igor said lead brick shielding will likely help. May consider moving the dump further downstream.
- Alexei also recently learned that it will be important to have a good strategy to clear accumulated ions out of the electron beam transports either by clearing electrodes and/or by clever e-bunch spacing. He shared related slides from Cornell. This is not needed in the RHIC cooling section since the ion beam will be present. A question that arose later is; will this be a problem in the cooling regions when we commission e-beams without RHIC ion beams present? Clearing electrode designs might end up being biased BPM stripline electrons in the e-beam transports, but need to be careful about their effective impedance. Mike B suggests considering a long biased wire along the edge of the inside edge of the beam pipe. The concern how an ion clearing applied voltage might negatively affect the electron beams was recognized and needs to be simulated.
- The topic of shielding or coating all insulators (ceramic breaks and viewports) that have line-of-sight to the beam was discussed, this was indicated by Bruce and Pavel at ERL15. Simple solutions such as installing sleeve-like shields need to be thought thru to avoid detrimental effects (capacitance, impedance, etc..) that could corrupt current or charge measurements.
- Alexei shared that an rf deflecting cavity is very important to be included in the injection beamline to help understand longitudinal bunch characteristics. This was confirmed by several people at other labs who found it a critical measurement. We will likely need a custom design to match our unique rf frequencies, copying an existing one will likely not be an easy option.
- The PAC15 paper that described the BerlinPro impedance analysis was discussed and distributed to meeting attendee's. Alexei encourages our team to consider similar analysis for LEReC.
- Jorg shared a nice set of slides describing a technique to measure absolute beam energy by inserting a 100u thick Aerogel screen in the e-beam path before the first bend, then measure the shape of the resulting emitted photons on a screen downstream of the first bend after the electrons are bent away. One might expect an absolute energy measurement on the order of 1e-4. This was demonstrated by folks in Japan, Jorg will look for published references for more details. One concern is if the aerogel will outgas and spoil the vacuum, and Igor asked how well will we know the aerogel characteristics and if they will change with time, beam exposure and outgassing, etc….
- Peter T share CST simulations of the Hybrid YAG+BPM+Slit assembly. Initial results look promising with a ferrite sleeve, he expects to have results for a more practical ferrite slug in a few days that might be easier and more reliable to fabricate.
- The Cooling BPM mechanical design was discussed. We can accept the tolerance error stack up (~0.024") for the button face position with respect to the adjacent housing aperture ID as long as the distance between opposing electrodes to beam line center is equal to high accuracy, MPF estimates (+/-0.002"). Regarding schedule, Joe recommends we tell MPF that if the BPM housings can be fabricated to spec, then it is reasonable to have MPF fabricate the BPM housings and buttons simultaneously to improve the overall delivery time.
- MPF requests a Final Design Review for the Cooling BPMs next week so they can place bulk orders before their 2 week July 4th shutdown. Will try to plan something early in the week.

Notes from This Meeting (6-4-15)

LAYOUT

- 2 solenoids & BPMs in the DC gun beam line before the booster cavity.
- profile monitor and cathode monitor camera in the laser cross. Also, to accommodate Peter's energy spread slit method,
- the downstream Blue cooling section PM will be converted for use as the Yellow PM downstream of the 180 dipole
- the Hybrid BPM+YAG in the Yellow B/L will become a 3-position device with both slit and YAG.

Profile Monitors

- Cooling section PM design to be converted to a plug design instead of left open with ferrite absorber.
  - May also be applied to the new Hybrid but will require an actuator modification for on-axis optics.
  - Will only need 4 two-pos pneumatic actuators; where the 5th one will have to be a new 3-position design.
  - Gary will get the model ready for Peter to perform a simulation based on the ferrite method and then convert the model to the plug version for a repeat of the simulation for comparison.

Time of Flight Energy Measurement

- This measurement needs to be made using two BPMs with more than 2m separation.
- Which BPMs shall we use to measure the Gun's 400keV ToF?
- This measurement will be calibrated against the 400kV HV measurement. How good is the Cornell Voltage Divider (better than 10-3)?
- The time of flight will be measured from the phase while increasing the RF accelerating voltage toward the 1.6MeV beam energy to obtain a calibration. There will likely be some "blind gap" between an upper energy limit that the ToF can measure and a low energy limit that the 180 Dipole energy spectrometer can measure.
- Further discussion with the RF group need to take place.
- Testing of the ESRF phase monitor technique needs to be performed.

Recombination Monitor

- Recent tests during APEX showed that a 70:1 Au ion in the RHIC beam dump to Pin Diode count was measured.
- With the expected recombination rate, the use of the existing Pin Diode BLMs seem to be sufficient to count the gated recombination rate.
- The noise background still needs to be measured in a gated mode.

Current Loss Measurement

- The common mode DCCT is now planned to be mounted just upstream of the 5-cell. Jorg's optics afforded a short space for the DCCT (need to confirm the space allotment). Where to install the first DCCT (currently planned for roughly the same place… maybe in the beam dump line.

Phase 2 Layout

- The beam envelope plot will be ready after Jorg presents it at next week's ERL Workshop. This will allow the final decision on the count and placement of return transport line instrumentation.

Notes from Previous Meeting (5-28-15)

ENERGY MEASUREMENTS

Bruce and Ivan encouraged us to have more than one method of energy measurement. They suggested a time of flight (ToF) measurement system based on BPMs (as they use) in conjunction with either of our spectrometry techniques.

- **180 DIPOLE + PM'S**
  - 1. Peter's slides on angle sensitivity were presented, showing how the upstream BPM for angular measurement requires less accuracy than the BPM near the Dipole. Thus, only the two BPMs near the Dipole will be fitted with YAG screens.
  - 2. Peter's suggestion of using a slit in the upstream BPM+PM and an additional PM downstream of the Dipole to improve energy spread measurements was presented but discouraged due to lack of need over current use of strong focusing solenoid and PM after the Dipole.
- **SA SPECTROMETER + PM'S**
  - Igor's design of small-angle air-core-dipole energy spectrometer beamline with two YAG screens for position measurement was presented and met with encouraging nods.
- **TIME OF FLIGHT**
  - 1. Cornell uses standard CEASER BPMs that are clocked @ ~12.5MHz and give relative phase information for all BPMs relative to the clock. Bruce sent slides by email & explained that we should calibrate the cavity at low energy using ToF at measurement and extrapolate up to 1.6 and 2MeV.
  - 2. Bruce & Ivan stated that 1 - 2° of phase measurement is easy and 0.1° is possible with high bunch charge and averaging over many bunches.
  - 3. Rob Michnoff can talk with John Dobbins at Corness about BPM electronics.
  - 4. Alexei stated that 7ps at 1.6MeV is required instead of 0.03ps (as previously suggested by Igor).
  - 5. Jorg suggested to use Frist & Last BPM buttons in the Yellow & Blue cooling sections (respectively) to have a 20m separation. Turning off the accelerating cavities propagates a 400keV beam from the gun; which is 1Ž4 the 1.6MeV energy. Reducing all the magnets to 1Ž4 of their setpoints should allow the 400keV beam to propagate all the way through these two BPMs with 20m separation. Measuring the relative phase between the two with a dedicated electronics provides a dedicated instrument in one place to measure the beam energy by time of flight for both 400keV and 1.6MeV energies with high resolution afforded by the long 20m separation.

GUN INSTRUMENTATION

- **Position Measurement**
  - It was discussed in the earlier meeting to install a large button BPM at the Gun solenoid (instead of the stripline BPM).
- **Profile Measurement**
  - Bruce explained that it is necessary to have a profile monitor before the SRF booster. It was decided to fit it into the laser-cross chamber.
- **Laser & Cathode Monitoring**
  - 1. Bruce explained that they needed to scan the cathode surface with a pinhole sized laser spot while measuring the beam produced on the YAG screen to make a "pin cushion" map to find the charge center. This requires automated steering of the laser beam.
  - 2. In addition to the camera imaging the cathode, monitoring the laser beam reflected off of the cathode surface was very important. This will require special optics to separate the reflected laser beam from the cathode view.
- **Gun Shielding**
  - 1. As the cathode is sensitive to stimulated emission, stray X-Rays & UV from the SRF cavity or beam loss can reach the cathode and produce more halo. Bruce suggested a couple of sheets of lead be added to the face of the SRF cavity cryostat to provide shielding for the gun.
  - 2. Bruce claimed that 50pC of beam loss would produce 1R/hr of background radiation that can swamp PMT BLMs. He had to abandon the use of PMT BLMs due to their oversensitivity to background radiation.

Notes from last meeting (5-14-15)

- Discussions concerning the 180 dipole chamber resulted in a decision that the permeability (μ) in the welds and in the bulk SS metal should be <1.01 in order for the difference Δμ across the welds to be inconsequential.
- For Phase2, a common mode DCCT was requested and encouraged to be placed upstream of the 5-cell. A location for the 2nd DCCT in was discussed.
  - It was suggested to be on the gun side of the 5-cell, if space permits.
  - Its affect on impedance is likely negligible, according to Igor P., since:
    - It has a short gap
    - It is well shielded
    - A microwave absorber could be easily added if needed
- The test scintillator for the synchronous kick recombination monitor was discussed. It was decided to install TWO scintillators (PgGl+PMT) downstream of the Yellow collimators: one at beam height and one below the beam pipe.
  - We will test saturation & recovery time of the detector
- Commmissioning Time vs. Operation Time of measurements was discussed, but put off for later consideration.

Notes from previous meeting (5-7-15)

- Discussions of the Synchronous Kick Recombination Monitor revealed the need to estimate the detected secondary radiation from the collimators due to the gold ions. Even though the recombination rate is high, only a small portion of these secondaries will be captured by a detector.
  - YAG:Ce was suggested as a fast detector available in large sizes
  - Use of Cherenkov detectors was also proposed.
  - The detector of choice must not be too sensitive to background γ's.
  - A test was suggested of the response of a detector to the radiation that the gold beam produces on the collimators to aid in the selection of the best scintillator. BGO, YAG:Ce, etc….
- The Commissioning Approach was refined as follows:
  - Set energy using RF to 10^{-2} accuracy
  - Use 180° Dipole to measure absolute energy to 10^{-3} accuracy and readjust to match ion beam energy
    - Requires measuring 180° Dipole field strength to 10^{-3} accuracy
    - Animesh's reproducability of 10^{-3}
    - We need to buy a magnetic field probe accurate to 10^{-3} down to 180 gauss.
  - Measure beam position and adjust alignment
  - Measure emittance and adjust optics accordingly
  - Measure energy spread and adjust optics accordingly
  - Look for evidence of cooling, adjusting scanning energy if necessary
    - Using Schottky Monitor to look for Au^{+78} peak or cooling peak
    - Using Synchronous Kick Recombination Monitor
- Discussing the placement of the emittance slit before or after the solenoid, it was mentioned that:
  - With no Mu metal over the solenoids, annealing of the solenoid's steel is prudent.
  - The solenoid end plates could be removed and re-annealed if necessary
  - All solenoids will have to have their fields mapped during receiving tests
- Current & Loss Measurement techniques were discussed…
  - The impedance effect of the ceramic gap in the ICT needs to be accounted for!
  - There is a 5 – 10uA loss limit
  - DCCT may be too slow or noise floor may be too high
  - Can DCCT be placed in common point in ERL arrangement for real differential measurement?
  - PMT's may be useful only without ion beam – noise background should be checked.

Notes from last meeting (4-30-15)

- Magnet measurement results presented by Animesh
  - Tests show reproducibility of betterh than 10^{-3}
  - Test not made for field quailty. This will require a rotating coil to map the field in 2-D
  - Power supply for 180° Dipole must be bipolar for a proper anhystersis cycle of the magnet to reduce the remnant field
  - Animesh suggested a company called Sinus in Switzerland who may make a suitable low-field probe. He mentioned an electron spin resolution probe as well…

- Mu-Metal shielding calculations were presented in Joe's meeting. Currently, the outer layer of the two shall have a radius of 20cm. This determine the distance the Profile Monitor optics shall be from the beam center.

- Impedance simulations of the Y-pipes show 0.01V/pC per joint. The total budget is 10V/pC for the entire machine.

- Phase 2 layout was discussed. There is only a rough sketch of the proposed layout at this time. Jorg is preparing a full description of the optical lattice for both Phase 1 & 2.
  - For the time being, the cable requirement for phase 2 was agreed to be estimated as equivalent to that of phase 1, thereby doubling the current cable quantities for the full project count.
  - The layout of the controls trailer is complete with 16 racks for instrumentation and a preliminary rack layout
  - A list of suggested instruments will be generated as soon as Jorg's beam line description is presented.

- The expected rate of recombination was debated and finally settled on a rate of ~500kHz (worst case) for $\Delta\rho/\rho=10^{-2}$ and a beam lifetime of 60Hrs. It was reiterated that the Au^{+78} ions would need to be detected with gated electronics to only pick-up the ions synchronously kicked out during the abort gap.

- The alternative method rivaling that of the Synchronous Kick Recombination Monitor is the 2nd line in the Schottky Monitor and will require very good signal/noise ratio.
  - Mike Blaskiewicz said he will need to provide some calculations.
  - A field test was suggested.
  - A mock-up bench test was also suggested using a BPM being removed this summer
  - Reconfiguring the resonant BPM for a sum/diff measurement for better signal was suggested

- Commissioning Approach:
  - Set energy using RF to 10^{-2} accuracy
  - Use 180° Dipole to measure absolute energy to 10^{-3} accuracy and readjust to match ion beam energy
    - Requires measuring 180° Dipole field strength to 10^{-3} accuracy
    - Animesh's reproducability of 10^{-3}
    - We need to buy a magnetic field probe accurate to 10^{-3} down to 180 gauss.
  - Use Schottky Monitor to look for Au^{+78} peak or cooling peak

Notes from previous meeting meeting (4-23-15)

- The layout changes to the end of the Yellow cooling section must change
  - Will meet with Joe T. for details
  - …
- Animesh will present his test results at a meeting next Thursday scheuled for 2:00pm, followed by Joe's meeting at 2:30, followed by this meeting at 3:00.
- Christoph presented his technique of resonant kicking recombination monitor.
  - Peter Thieberger will estimate how much of the Au^{+78} ions will have their recombination electron stripped off due to 10^{-9} vacuum level gas stripping.
  - His simulation predicts that practically no Au^{+79} ions will appear in the background with the same tune as the Au^{+78} ions.
  - The resonant kick will have to be in the vertical plane.
  - A new amplifier with a narrow enough bandwidth to kick on the resonant tune line, and only in the abort gap, is commercially available for ~$20K
  - An alternative method was pointed out of looking for a corresponding Au+78 revolution line in the Schottky monitor.

Notes from previous meeting (4-16-15)

- The preliminary results from Animesh's tests were discussed with a pertinent question whether the results refer to an absolute accuracy of $2x10^{-4}$ or a relative measurement only. Alexei plans to invite Animesh to a meeting next week.

- Concerning an absolute energy measurement in the 180 deg dipole, a 0.7mm absolute accuracy in beam position measurement is necessary. This seemed feasible.

- It was decided to move the High Field Solenoid in yellow cooling section closer to the 180 deg dipole and move the BPM to the upstream side of the solenoid to accommodate the beam pipe transitions pieces and keep a standard size BPM.

- The recombination monitor may suffer from a low S/N ratio. We can expect 10kHz events/1% $\Delta p/p$. BUT, with a resonant kicker to target the Au+78 ions, we may be able to detect the Au+78 secondaries on the collimators with gated detectors to look only in the abort gap. Christoph will preset the technique at the next meeting.

- The commissioning plan is to tune the energy:
  - to 10-2 with the RF then using the 180 deg dipole energy measurement
  - Then to 10-3 using the recombination monitor with resonant kicker
  - Then to 10-4 using the Schottky Monitor

Notes from previous meeting (4-9-15)

- Alexie & Joe confirmed that bucking coils will **not** be needed to suppress the field on the high field solenoid that moved from the end of the Blue cooling section to the end of the Yellow cooling section.

- There is still no report on test results from Animesh concerning our decision to use laminated or solid core for the 180 degree dipole magnet. Our concern is field quality throughout the core; where small anomalies in the core structure can lead to higher order field errors.

- With the move of this high field solenoid, its smaller aperture will require a transition from 5" to 3.75" beam pipe before the solenoid. This will require either the movement of the last BPM in the Yellow cooling section from the end of the section to just upstream of the high field solenoid (and a resulting shift of PM slightly upstream) OR the procurement of a smaller aperture BPM chamber. We will proceed with procurement of the BPM chamber based on the original 5" beam pipe design for now.

- There is no instrumentation defined for the phase 2 return beam line. Moreover, it was explained that phase 1 will run until July 2018 when it will be opened for 1 year of construction of phase 2 (ending in July 2019).

- The recombination monitor is still a feature to provide a signal to lead us to an energy match of 10-3 where the Schottky monitor will show evidence of cooling and allow us to tune to 10-4. Challenges of this method still include:
  - Procuring a narrow-enough bandwidth kicker for the abort gap cleaner (vertical tune-resonant-kick planned)
  - Determining how much power will be needed in the kick
  - Picking up enough signal from the PIN Diode LM's detecting Au+78 ions collected on the collimators. We may have to move to scintillators & PMTs for greater sensitivity. The signals must be HBW so that they can be gated to be synchronized with the abort gap. Statistics are collected as bunch-by-bunch loss monitor data that will be used to display the evidence of the lost recombined ions.
  - Mike Bl. is still looking into determining whether or not we will need to upgrade our Schottky monitor.
  - How much background signal will there be from +79 ions leaking into the abort gap due to IBS and loosing momentum that will give them the same effect as the +78 ions.

- The transport beam line layout and instrument placement will be done once Jorg completes a summary of the lattice and beam line elements (~2 weeks)

- A first pass at developing a DC gun layout gives a 70 cm space between the DC gun and the SRF cavity cryostat. Work on this section is put off for up to 6 months due to growing tasks to complete in the design room.

- It was decided to move forward with procurement of the PM & EMS where the optics shall be excluded from the SOW. Joe decided that the procurements shall be for full packages of actuator and in-vacuum components (YAG in PM and Tungsten Slit mask in EMS).

Summary of total wake potential estimates from Particle Studio simulations for single LEReC instrumentation device housings calculated for 30 16mm RMS long, 100 pC bunches per RHIC bunch.

P. Thieberger 3/12/2015

Device housing	Total wake potential estimates for one device	Comments
	(V/pC)	
Floating ERL cage without ferrite	17	Coherent sum
Floating ERL cage with ferrite *	2.2	Coherent sum
Floating ERL cage without ferrite	1.17	Incoherent sum (applies to all lines below)
Floating ERL cage with ferrite *	0.44	
Connected ERL cage without ferrite	0.70	Connected at one point at each end
Connected ERL cage with ferrite*	0.20	Connected at one point at each end
Cooling section housing without ferrite	0.08	
Cooling section housing with ferrite	0.02	One ferrite slug** – Power absorbed **19 mW***

* 2 rings: OD =101 mm , ID =68 mm , Height =76 mm

** Designed by Gary Whitbeck

*** The power dissipation in the ERL cage ferrite rings was not calculated but is expected to be smaller.

Notes from previous meeting (3-26-15)

- The DC gun interface is being designed and a space of 70cm (27.5”) is planned between the DC gun and the SRF gun cavity.
  - The laser cross, stripline BPM & PM should all go there. However, there may not be enough space:
    - PM can be as short as 7.5”,
    - BPM may be ~12”,
    - laser cross may be ~8.5” (based on 6-way 6”CF)
  - Totaling -1/2” if bolted end-to-end…
  - Q/ Could profile monitor and laser mirrors be built into one 6-way cross?
  - Q/ Could laser cross & PM remain downstream of the SRF gun cavity?
  - Q/ will PM chamber need to be a special impedance matched design as e-beam will be its shortest and lowest energy here.
- The current schedule has LEReC taking the space occupied by the CeC undulators in 2016.
- Jorg needs the distance from the last solenoid to the energy measuring PM to calculate a focused beam size for the energy measurement section. This PM has a 25x15mm YAG crystal.
- The transport line design shall have a design review near the end of April.
- Need for simulations to proove a 10% precision in emittance measurement is prudent before procurement of both PM & EMS; however Joe recommends to proceed with procurement. Chuyu will not have enough time. I will speak with Michiko & Peter T. about for help with these calculations.
- Procurement process for PM & EMS
  - Waiting on PM chamber simulation from Peter T.
  - Waiting on design envelop specification from designer
  - SPEC & SOW ready for co-author review next week.

Notes from last meeting (3-19-15)

- Concerning the **absolute energy** measurement beam line, Igor explained that the deflection angle will be about 10mrad and the drift length will be about 1m. Alexei asked if this can be done within the transport beam pipe.
  - Peter explained that the magnet should be separate from the beam line to make in-situ magnetic field measurements more convenient.
  - Peter added that an air core magnet will not work here but a steel core magnet with low packing factor should work well.
- Concerning **BPMs**, Igor spoke of a proposal to purchase 6 BPMs to be set up for CeC that would later be used on LEReC. These would be installed in the CeC straight section.
- Jorg presented simulations on how sextupole field errors in the 180° dipole magnet would adversely affect the **energy spread** measurements. The group found variables that should change in the calculations. Jorg will send out an updated version for review.
  - Although the energy spread measurement without slits will not work with a great sextupole error, Dmitry suggested a small sextupole corrector before or after the dipole could be an effective way to mitigate large field errors.
  - Peter urged for the simulations to include also quadrupole field errors since the real magnet will have imperfections leading to quadrupole errors as well as sextupole errors.
  - It was agreed that for energy spread measurements, the 10^{-3} field requirements of the 180° dipole is sufficient the energy spread measurement has also a10^{-3} resolution requirement.
  - The addition of bucking coils to the high field solenoid, that moved to the end of the yellow cooling section, will be decided upon once there are studies performed by Wuzheng.
- In discussing new vacuum chamber design requirements with improved **impedance matching** characteristics for instrumentation, there was much debate as to the need for the halo scrapers (now called “halo monitors”). In the end no one asked that the 6 from ERL be removed. Possibly, the quad scraper (downstream of the LINAC) may exchange place with the dual scraper (downstream of the Gun).
- Michiko and Chuyu discussed the use of OTR for **absolute energy** measurements. In a later conversation, Chuyu explained that the OTR energy measurement would not have as good of a resolution as the newly proposed energy measurement beam line. Therefore, we decided to drop the idea of modifying the profile monitor’s spec to include OTR measurements.
- During discussions of the **recombination monitor** for absolute energy measurement, Mike B. pointed out that simulations have been made that revealed that the Au+78 ions will fall out of the RF buckets and into the abort gap in about 10,000 turns; where the dynamic aperture for the Au+78 ions is about 8 sigma.
  - The signal to noise ratio is being studied where the noise floor is determined by ions leaking into the abort gap due to IBS.
  - Alexei pointed out that with an energy error greater than 1%, leakage due to IBS would be so great that it would consume the signal.
  - THUS, are there performance requirements that have to be met in order for this method to be useful and what steps can be taken in the commissioning plan to ensure that this level of performance is met before we can use this tool for cooling indication?
- While discussing the vacuum chamber for the **profile monitors**, Alexei asked if we can generate real numbers for the temperature rise of the ferrite. Peter explained in a follow-up email that the power absorbed by the ferrite block is only 19mW. Moreover, the power absorbed in the ferrite rings in the ERL profile monitors will be even less. Thus, the temperature rise is expected to be negligible.

Notes from previous meeting (3-12-15)

- Remove the **recombination monitors** in the cooling section and use the money in the estimate to fund the Roman Pots type detector to pick up the +78 Au ions – provided the RHIC lattice can provide an extraction point. Christoph advised that the efforts so far provide only 1.5σ maximum separation where only the tails might be picked up.
  - It was suggested that a low RF bucket voltage may allow the +78 Au ions to fall out of the bucket into the abort gap where an injection kicker could be used as a gap cleaner to kick out these ions to be picked up at a strategic point.

- Concerning the **absolute energy** measurement beam line, a new magnet, BPM and PM will be required.
  - A permanently installed rotating coil is desired in the dipole of this beam line to measure in situ the magnetic field. Animesh needs to be consulted concerning the accuracy of measurement possible with this device.
  - An relatively small air core magnet was suggested but may need to change to a laminated steel core with low PF.

- Much discussion was had of the order in which measurements would have to be made to achieve cooling. Alexei was asked to put together a **commissioning plan** to lead the path of instrumentation and commissioning development.

- Discussions on **energy spread measurements** led to Jorg's slide on the measurement in the cooling section with the properly spaced PM. This showed an acceptable horizontal dispersion of about 3 – 4 X that of the vertical beam size, based on strong solenoid focusing before the 180 dipole. It was decided to omit use of the four slits. The high field solenoid at the end of the blue cooling section shall be moved to the end of the yellow cooling section, just before the 180 dipole. Bucking coils may have to be added to this magnet.
- Tests continue on 45 dipole to determine field repeatability when turning the magnet on and off. This will drive the decision on core type for the magnet(s).

- During the discussion on the summary of **impedance matching** device chambers that Peter T. put together, Alexei asked that the table include values for the following instruments, noting that all valves, bellows, and ion pumps have been specified to have RF shields.
  - BPMs
  - Warm cavities
  - Flying Wire PM
  - Dipole Chambers

Notes From Previous Meeting (6-6-15)

- While discussing the ferrite use in the profile monitors, proximity to the SRF cavity (1st PM before the 704MHz LINAC) may require special glass encapsulation of the ferrite. This will require some investigation, including the use of alternate absorbing materials.

- Peter T. has compiled a chart detailing the V/pC effect of the simulated chambers.

- Comparing OTR with YAG, Igor explained that OTR flux = $\gamma*\alpha$ (# photons/e). As LEReC has a gamma of 1/37 at its low energy, the flux would be much lower than that from the YAG. Although 5MeV may be perfect. Although the time response and transverse resolution of the OTR emission is superior, it may not warrant the decrease in emission.

- While discussing the 180 degree dipole for energy measurements and the recent magnetic measurement results, the stability of the magnetic field came into question. It was suggested that cooling water be stabilized to stabilize the magnetic drifts in the magnet. Many pointed out that this may be just as hard as anything else. Looking at beam position out of this magnet will indicate both energy change and/or magnetic field change. However a position change correlated to positions near other magnets can confirm energy changes. A need for

- RF feedback on the 10-4 scale was discussed.
- Existing orbit feedback may need an upgrade for low energy (12-bit to 16-bit). Christoph explained that this is already underway (~$40K for the project). Upgrade in the LEReC cooling section was requested for run18, but may need to be pushed up sooner.

- BPM discussions questioned how low of a charge in the bunch train will the BPMs measure, as 300pC/train already produces a low voltage signal. Rob & Igor discussed whether or not a single electron bunch or a train of bunches will be a better starting point for commissioning. Rob will study this in detail.
- The effect of beam size on the beam position measurement was questioned. This requires further investigation.

- Jorg's presentation on energy spread measurements in the cooling section showed that there are only 250 particles left (out of ¼ Million) through the first slit. Thus the slits will be impractical to use. However, we can expect $\Delta\sigma$=6X thus giving good resolution measurements when compared to a horizontal slit for a vertical size measurement. We will plan to use no slits. Jorg will repeat the simulation based on the current location of the profile monitor at 126.6 inches downstream of the face of the dipole.

- While discussing hysteresis cycling of the magnet(s), this requirement of the solenoids was questioned. Peter T. thought they were less sensitive enough to neglect that requirement and Jorg K. agreed.

- Igor presented a novel and ingenious solution to the absolute energy measurement where the current diagnostic beam line can be replaced with a spectrometer composed of an air core bending magnet, two tandem BPMs to track the turning-point error in the deflection angle, and a mechanically scanning profile monitor used to track the deflection distance while tracking the centroid of the beam profile. A 10µm resolution will be required of the scanning profile system in order to overcome pincushion distortion of the lens.

Notes From Previous Meeting (2-26-15)

- There was a question about bake out temperature (200C or 250C). Joe will make determination with the vacuum group. During discussions about the impedance matching design for instrument vacuum chambers, it was suggested to investigate a think black paper type RF absorbing material for use in vacuum. Mike Brennan may have information about this material. The work on the cooling section PM vacuum chamber design was presented and discussed. The use of ferrite has made the design acceptable. It was suggested that ferrite also be used in the ERL PMs. Moreover, Mike B. suggested that we try simulating the placement of ferrite in the chamber and avoid modifying the cage to have contact fingers – that this might be good enough. Peter T. is running this simulation, increasing the ferrite rings to as large as possible.
- During discussion of the energy spread measurements, Jorg explained that the beam sizes in the Dog-Leg merger (with dispersion) are simulated to be 0.2x1.2mmσ (VxH) with one upstream slit compared to 1.2x3.6mmσ (VxH) *without* using a slit. Thus, **no slit may be required at all** for this measurement in the Dog-Leg merger. However, the simulation for this measurement in the cooling section is not yet complete. Jorg will present this at the next meeting.
- During discussions of energy measurement, it was suggested to use only the BPM downstream of the 180° dipole. Igor mentioned limitations to this solution such as nonliear response of the BPMs and difficulty of precise calibration. However, it was determined that the entrance to exit position accuracy requirement would only be 0.7mm. Jorg mentioned a novel idea of using an upstream slit mask and measuring the line rotation through all solenoids as an indication of the beam energy but this would require very precise field measurements of the solenoids.
- There are efforts to avoid requiring the 180° dipole to function as a quality energy spectrometer magnet. Alexei is pushing to place a smaller spectrometer-like magnet where the diagnostic beamline is planned, just after the linac. However, there was much opposition to making the measurement before the two warm 704 & 2100 MHz cavities. This would require a stand-alone energy spectrometer beam line at the end of the transport (as in the contingency). Currently, the 180° dipole is being designed with a separable core so that the vacuum chamber can be installed and the design of the core & magnet can be delayed as needed for design. The final decision to use this magnet will be based on measurements of a similar magnet being made by Animesh.
- It was announced that ***no slits will be needed to make the absolute energy measurement*** – only for the energy spread measurement.
- Chuyu's suggestion of using OTR to predict beam energy is still on the table. Chuyu may have something to present on the subject at the next meeting.
- While discussing profile monitor sensitivity for the energy spread measurements, Igor quoted an expected quantum effeciency of YAG to be 1% (photos generated for 1% of all impinging electrons).

Notes from Previous Meeting (2-19-15)

- The angle 0.42 degree difference between Blue & Yellow beams was discussed. This increase to the cooling section dipole of 180 to 180.42 degrees may necessitate an additional dipole at the entrance to the magnet to compensate. Dmitry's email from 2-11-15 suggested to keep "mirror symmetry installation". Moreover, the **dipole movement required** will be +/- 10cm (too large for a static vacuum chamber) thus requiring long bellows before & after the 180 dipole. This will take up space originally planed for instrumentation. However, only a BPM is planned there (and perhaps an externally mounted PMT for recombination detection).

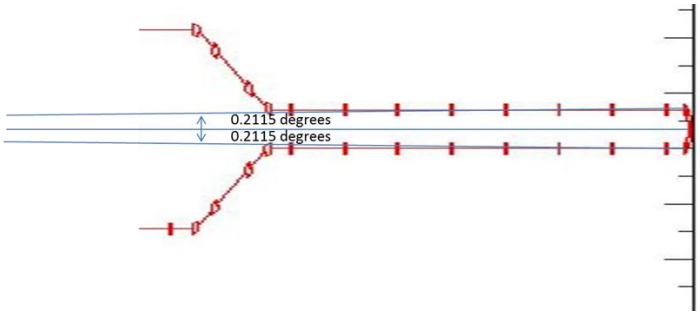

- Concerning energy & **energy spread measurements**, Mike B. suggested that if the total momentum aperture for RHIC is larger than 10^-3, then a field measurement of the 180 dipole of 10^-3 accuracy would be sufficient. Wolfram confirmed that since the Au+78 ions are not lost, then this should be true. Thus, we will move forward with a field measurement of 10^-3 accuracy for the energy spread measurements using a NMR probe + Hall probe, potentially from Caylar, France.
- Concerning the energy slits, we shall adopt the fixed slit mask with several slit sizes (30, 50, 100 um) spaced by 22mm. This measurement will be scanned through the beam. One horizontal slit for vertical size reference will be required so that slits can be used instead of a hole mask.
- Position resolution of 5 – 10 umvwas agreed to be OK. No alignment laser should be necessary – alignment with beam should be sufficient.
- According to Jorg's simulations, energy spread in merger using 20 deg dipole should have a horizontal dispersion of 2 – 3 X beam size for the expected 10^-4 energy spread. Thus, we can use the same type of slits as in the cooling section.

- This lead to **absolute energy measurements** where Mike B. suggested that we spread the energy of the RHIC beam and monitor the schotky signal for a spike indicative of cooling at whatever energy the e-beam has. The f-offset wrt RHIC beam will indicate the difference in beam energies. This is much like the technique at FermiLab. This may require an upgrade to the Schotky pick-ups and associated electronics. Mike B. will look at this more closely. This could alleviate the entire cost of an absolute energy measurement beam line and perhaps even the Roman Pot detector for recombination.

- Concerning **impedance matching**, current simulations of the CERN style half connected beam tube aren't good enough. Repeat simulation with a solid beam tube, half connected, is underway. Peter will generate intensity plots to locate the modal maxima for possible ferrite placement within the vacuum chamber. Mike B. suggested a simulation be run to calculate the Eigen Modes as an alternative method to this approach.

- Peter T. made a presentation on the advantages of building the **dipoles used for energy measurements** from laminated steel and employing a degaussing technique (anhysteretic conditioning) to put the remnant field on the anhysteric curve. This requirement would affect both the 180 deg dipole as well as the one 20 deg dipole used in the energy spread measurement.

Notes from previous meeting 2-12-15

- Beam transport line pipe size shall change from 2.5 to that which matches the ERL beam pipe.
- Review specs for Cornel's energy slits they used for energy spread measurement and copy details – power requirement, etc.
- Chuyu advised that the YAG thickness beyond 0.1mm will adversely the image resolution. Peter added that decreasing the N.A. of the optics can compensate and increase resolution. We should consider an image intensifier for the camera to support this during the low flux of the energy spread measurement through the 30um slits. The intensities need to be calculated and confirmed.
- Mike B. reminded us that Jorg's previous presentation showed that this double slit method did not give a respectable measurement – that it was coupled to the beam size. This needs to be confirmed with Jorg.
- The transport beam line is not yet defined by Jorg and thus all instrument placements are not yet defined. Even so, a plot of the beam envelope needs to be added alongside the layout to see where to place the different sized YAG screens.
- To optimize the PM in the merger for energy spread measurement, place it at the beam size minimum (presumably in the middle of the two solenoids, thus swapping positions of the flying wire & PM).
- During discussions on energy measurement, Peter T. said he is investigating an NMR from a company that can operate as low as 200G.
  - It was mentioned that we should take advantage of the department's expert on spectrometer design
  - It was also mentioned that NSLS has an spherical electron energy analyzer on the UV beamline and that perhaps we could learn something from that device.
- Chuyu described how OTR is much better than using a YAG when the intensity is high enough, as is in the case of the profile measurement. However, with the low intensity expected for the double slit energy spread measurement, the YAG is better suited. Should we add a second screen to the PM's to have both YAG and OTR?
- Chuyu will present a slide on using OTR for determining beam absolute energy during next week's meeting.
- Igor presented his method of measuring the phase difference of an ion / electron bunch from two consecutive BPM buttons to determine the time of flight. The independent measurements from the electron and ion bunches are then compared to check for energy match and one is adjusted accordingly.
  - He & Michiko discussed a test set-up that can be installed on two buttons of one BPM station in RHIC to collect statistics on measurements of noise and systematic error in the system.
- The recombination monitor was discussed and Igor estimated that a 1m dispersion would suffice in an IP region to extract the +78 ions. Although coincidence detectors was mentioned to determine Blue or Yellow beam ions, Mike B. suggested locating the detector ¼ wavelength from the IP so that a phase relationship to the RF could determine which way round the ring the signal was coupled to – hence Blue or Yellow beam. Later it was suggested to simply measure Blue and Yellow beams separately to save on complexity.