ELECTROMAGNETIC, THERMAL, AND STRUCTURAL ANALYSIS OF RF CAVITIES USING ANSYS

2.1 GHz 3-Cell Cavity

Cliff Brutus

7/9/15

Workbench Job Name: 2.1ghz_Symmetry_4-25-15
APDL Job Name: 2_1_ghz_apdl_6-19-15

Overall Layout

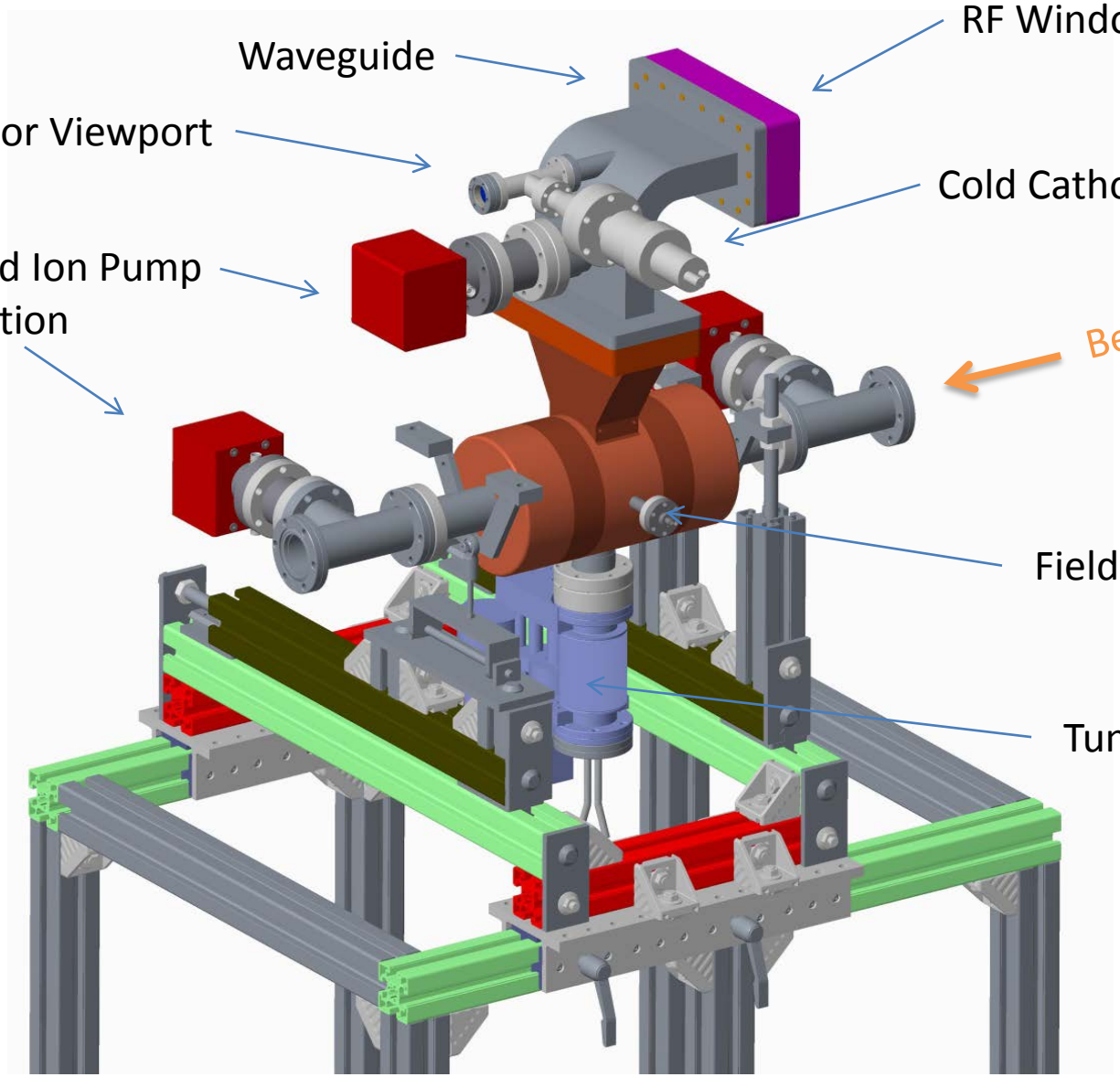

RF, Thermal and Structural Simulation

CAD Model

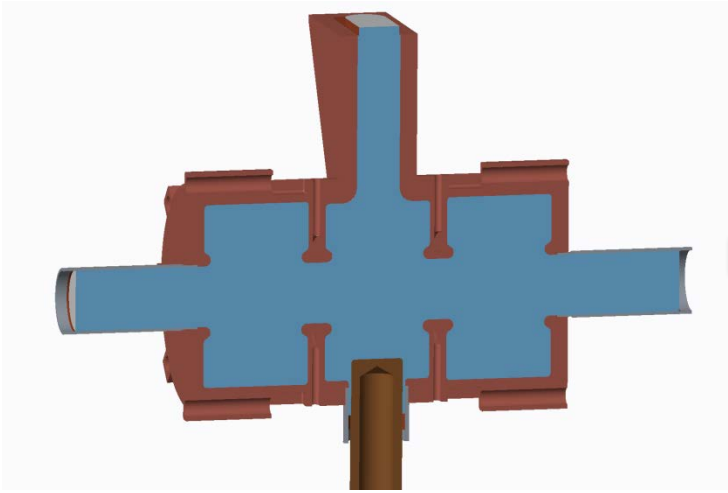

RF Analysis

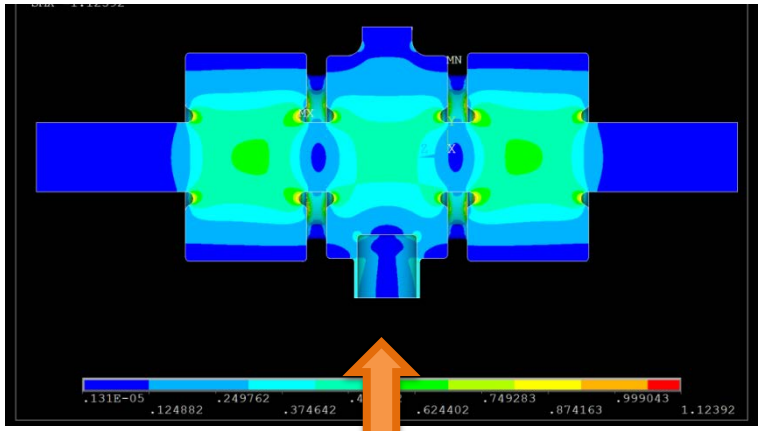

Thermal Analysis

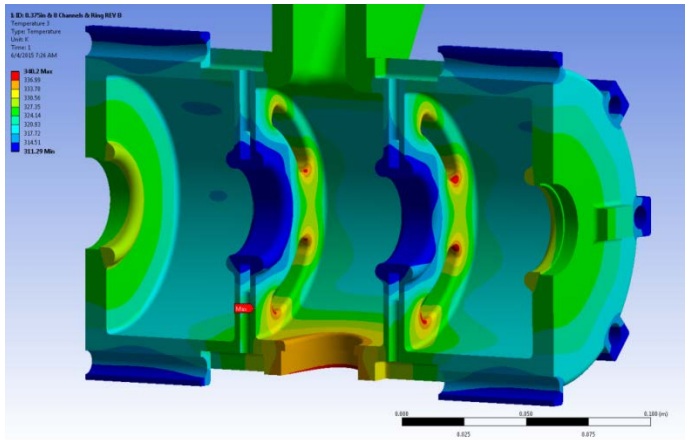

Structural Analysis

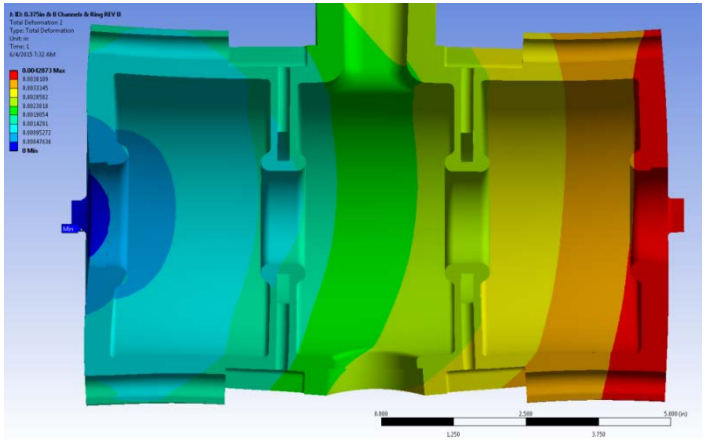

RF Analysis

Full Model

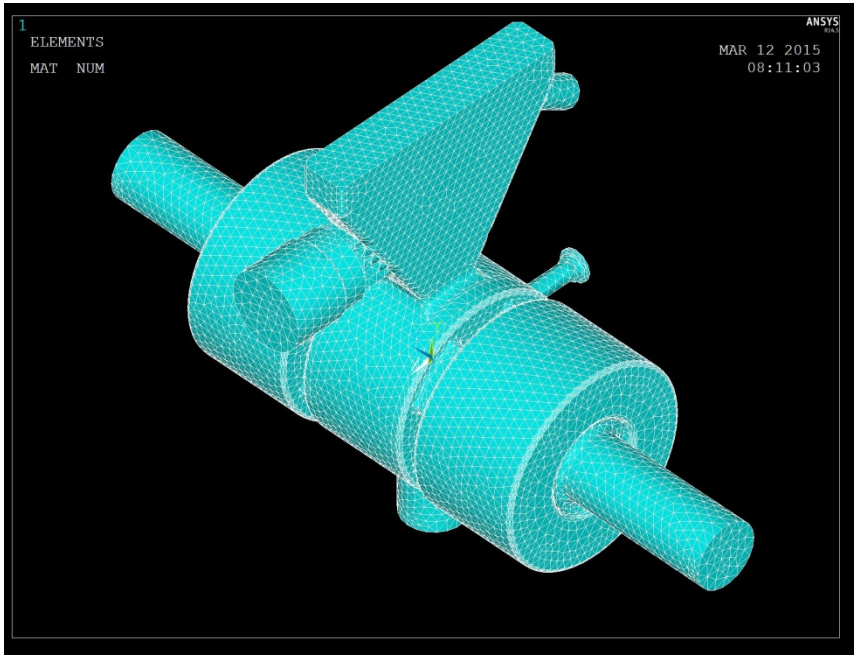

Symmetry

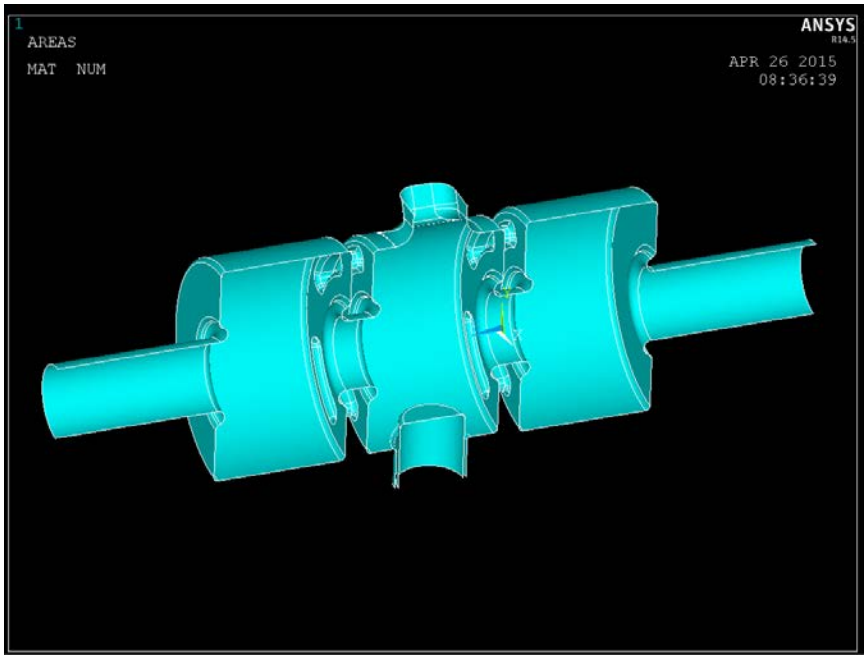

- **The cavity is not symmetric about its mid-plane since field probe port is on one side.**
- **Model is simplified by removing all the flanges, bolts and some ports that are not needed in the analysis**
- **Then the model is constructed to take advantage of the symmetry of the cavity about the beam axis**

RF Analysis

Frequency: 2114781678.364 Hz

6,423,586 Elements

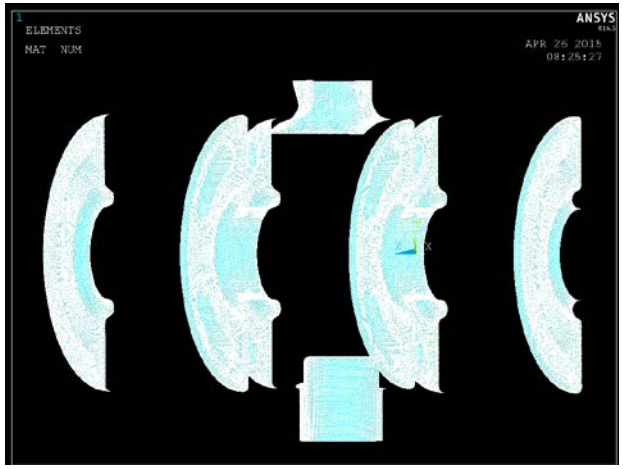

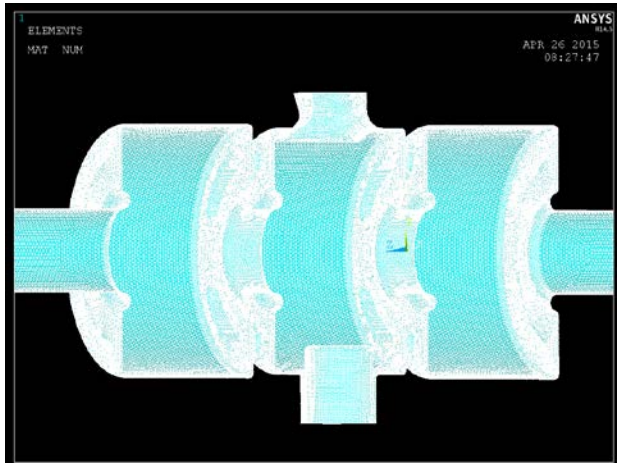

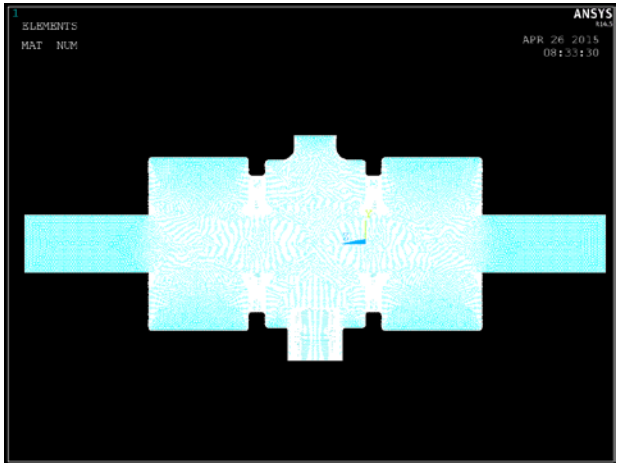

CRITICAL AREAS: 0.0008 m

BODY AREAS: 0.0015 m

VOLUME: 0.005 m

- **Regions near coupling slots, nose cones, waveguide and tuner are especially important for accurate frequency prediction**
  - ✓Mesh density enhanced 6x in this region
- **Maintains accuracy while keeping solution time convenient**

RF Analysis

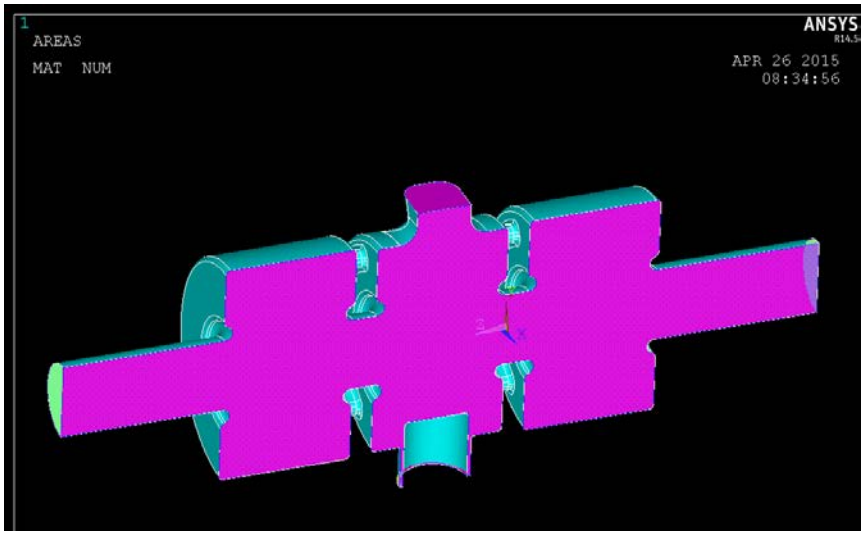

Unselected surfaces for BC

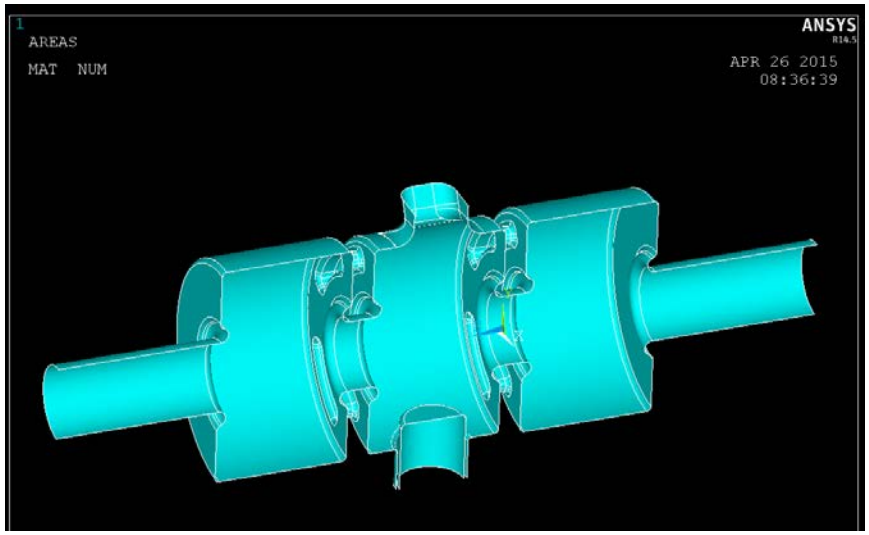

Electric Wall Areas

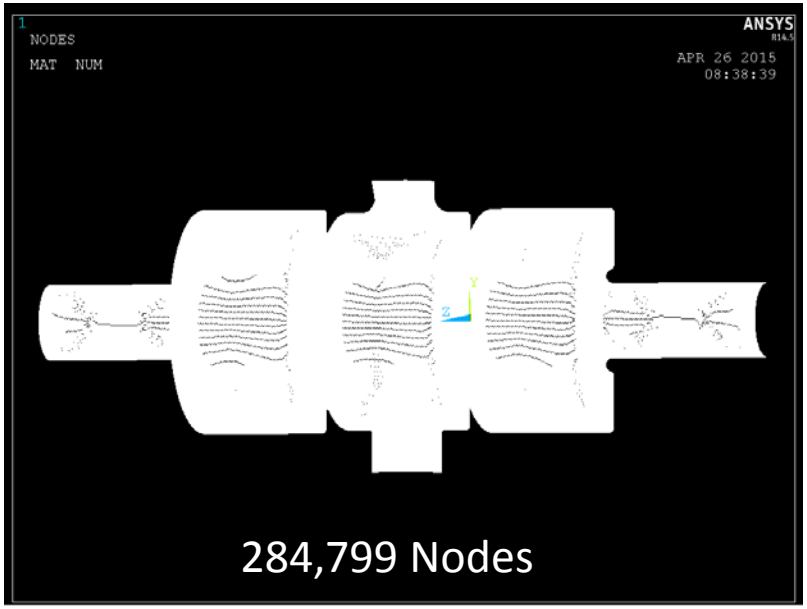

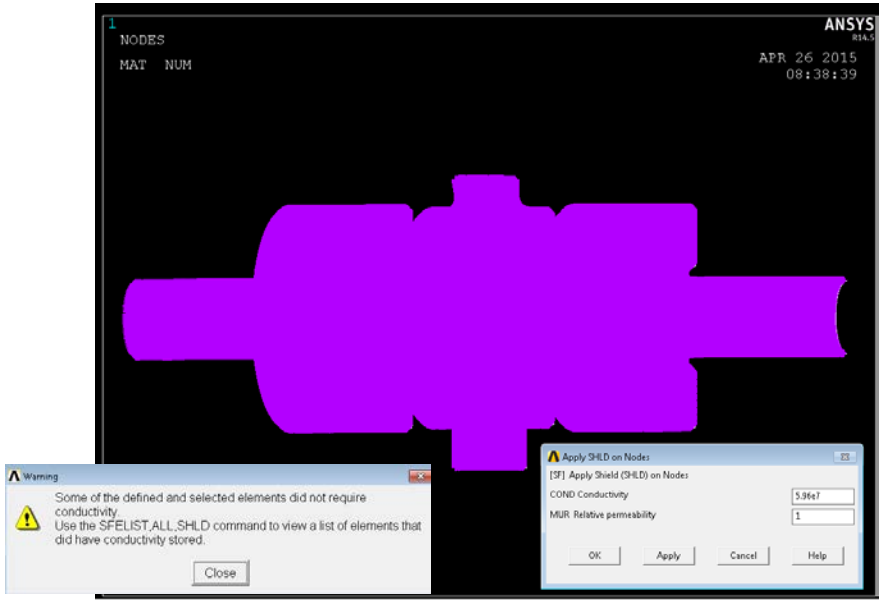

E-sum Nodal Solution

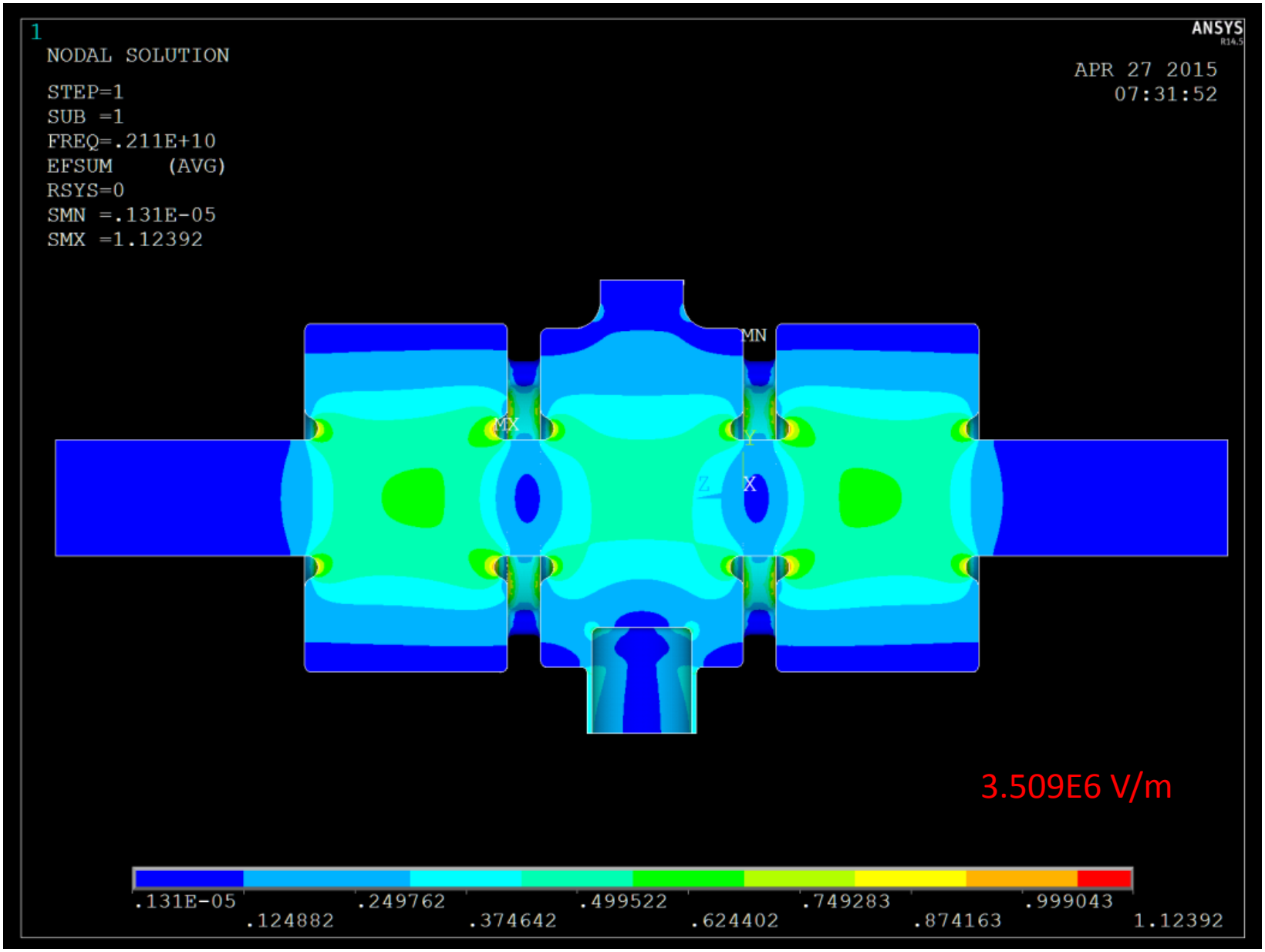

H-sum Nodal Solution

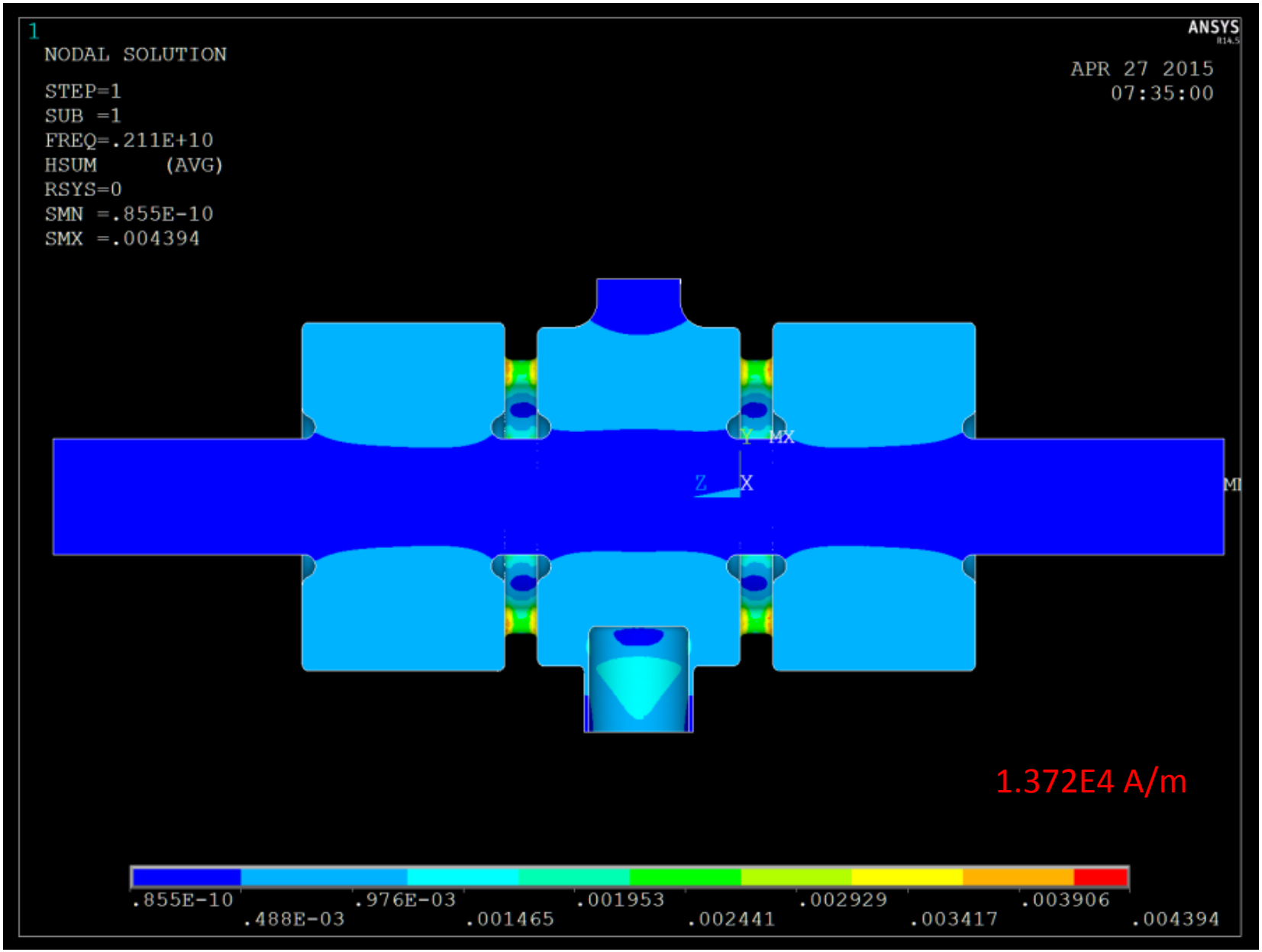

E-field along beam axis

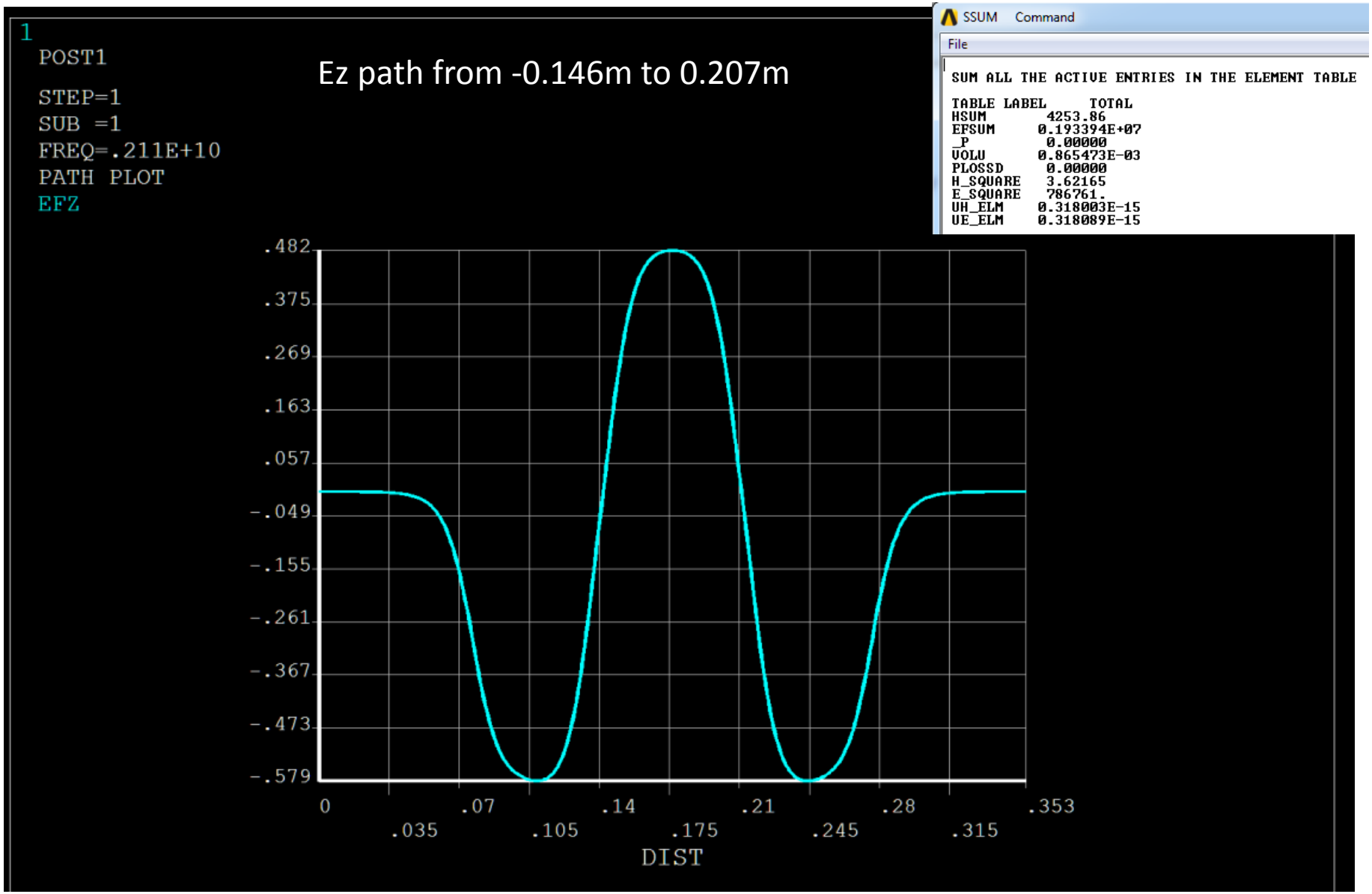

Thermal Analysis

- **Must determine scaling factor for power dissipation -> used the integral of the E-field along the beam axis also the stored energy as a comparison**

Scaling Factor = sqrt(U_{250k}/U_{ansys})
= 3902790.61

- **Thermal loads**
  - ✓Calculated heat flux on walls from RF solution (H-field) $HF = ½ * H^2 * R$
  - ✓Cooling channel convection

	[meter]	[meter]	[meter]			A/m^2	surface re	R =	0.01132		SF	3902790.61
NODE	X	Y	Z	HSUM	H Scaled	Heat Flux						
1	0	5.05E-02	-1.00E-02	9.99E-04	3.90E+03	8.60E+04						
2	0	-5.05E-02	-1.00E-02	1.00E-03	3.91E+03	8.64E+04						
4	-7.97E-04	5.05E-02	-1.00E-02	1.03E-03	4.03E+03	9.21E+04						
6	-1.59E-03	5.05E-02	-1.00E-02	1.01E-03	3.95E+03	8.82E+04						
8	-2.39E-03	5.04E-02	-1.00E-02	9.94E-04	3.88E+03	8.51E+04						
10	-3.19E-03	5.04E-02	-1.00E-02	1.00E-03	3.92E+03	8.70E+04						
12	-3.98E-03	5.03E-02	-1.00E-02	1.02E-03	3.99E+03	9.00E+04						
14	-4.78E-03	5.03E-02	-1.00E-02	1.03E-03	4.03E+03	9.18E+04						
16	-5.57E-03	5.02E-02	-1.00E-02	1.03E-03	4.01E+03	9.10E+04						
18	-6.36E-03	5.01E-02	-1.00E-02	1.06E-03	4.14E+03	9.69E+04						
20	-7.15E-03	5.00E-02	-1.00E-02	1.07E-03	4.18E+03	9.88E+04						
22	-7.94E-03	4.99E-02	-1.00E-02	1.04E-03	4.07E+03	9.38E+04						
24	-8.73E-03	4.97E-02	-1.00E-02	1.05E-03	4.08E+03	9.44E+04						
26	-9.51E-03	4.96E-02	-1.00E-02	1.04E-03	4.05E+03	9.28E+04						
28	-1.03E-02	4.94E-02	-1.00E-02	1.04E-03	4.06E+03	9.35E+04						
30	-1.11E-02	4.93E-02	-1.00E-02	1.06E-03	4.13E+03	9.67E+04						
32	-1.18E-02	4.91E-02	-1.00E-02	1.06E-03	4.14E+03	9.72E+04						

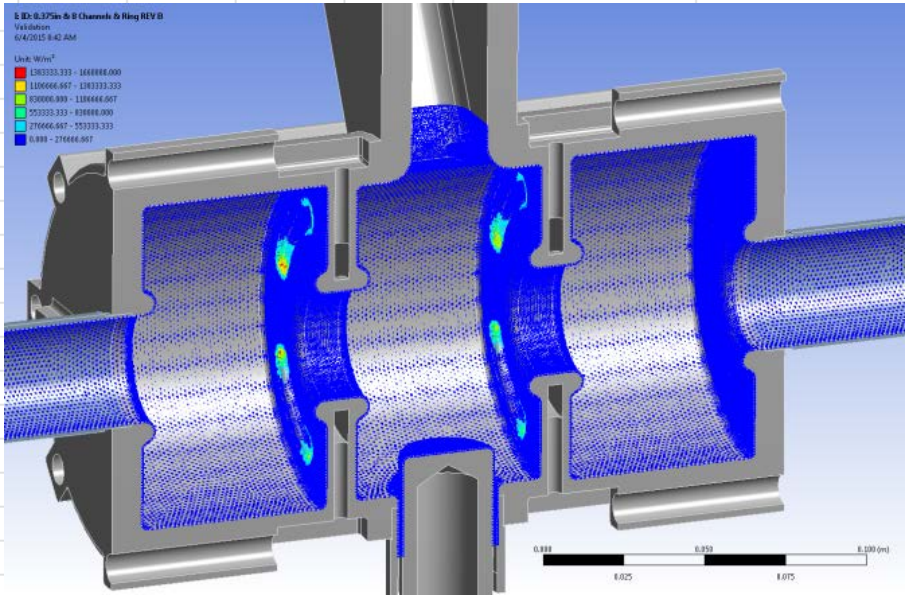

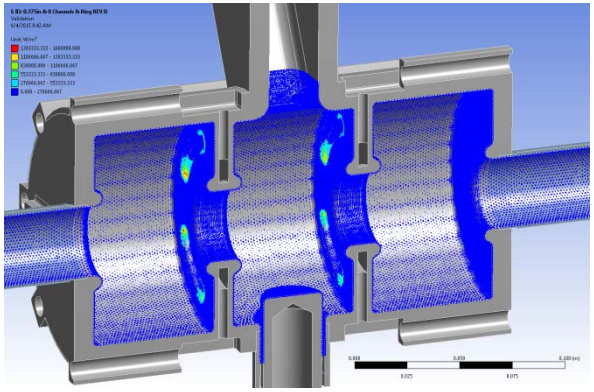

ANSYS	Freq.	2.1147816GHz
	U @ 250KV	0.0096875 J
	[illegible]	[illegible]
	[illegible]	[illegible]
	[illegible]	[illegible]
	Q factor	[illegible]

Est. Power Loss @ 200KV = 5927.630773 W

Est. Power Loss @ 250KV = 9261.923084 W

ANSYS APDL Total Est. Power Loss including Tuner	9261.92	W
ANSYS Workbench Total Est. Power Loss including Tuner	9413.78	W
Est. Power Loss on cavity surface	8728.58	W
Est. Power Loss on tuner	685.2	W
Est. Power Loss on window	TBD	W

>> For the window, Binping has not finish the design to move the window further away from the cavity.

Workbench reaction:
- 4706.89 W for ½ model

Scaling Factor = sqrt(U_{250k}/U_{ansys})
= 3902790.61

-342.6 W

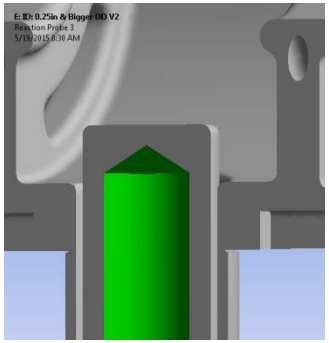

-2867.7 W

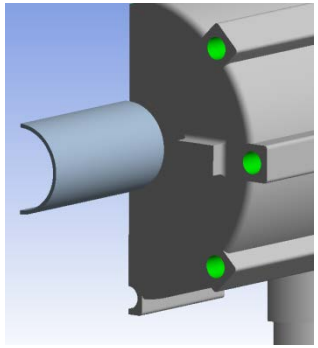

-166.83 W

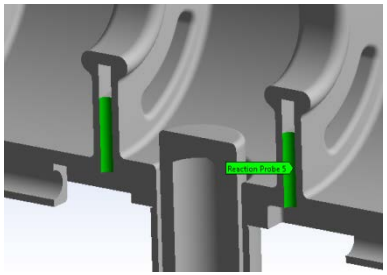

-202.36 W

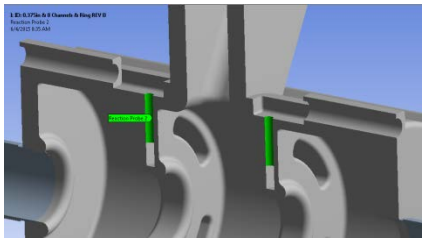

-1127.4 W

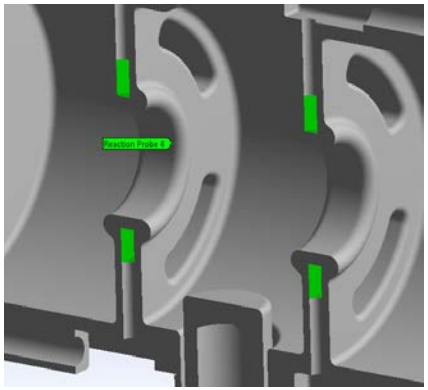

Nose Cone and Coupling Slots Cooling

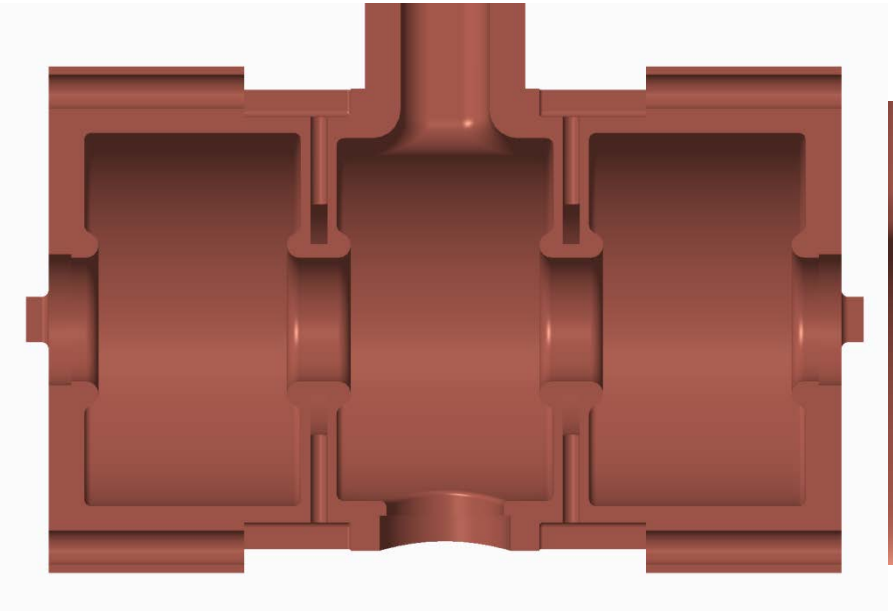

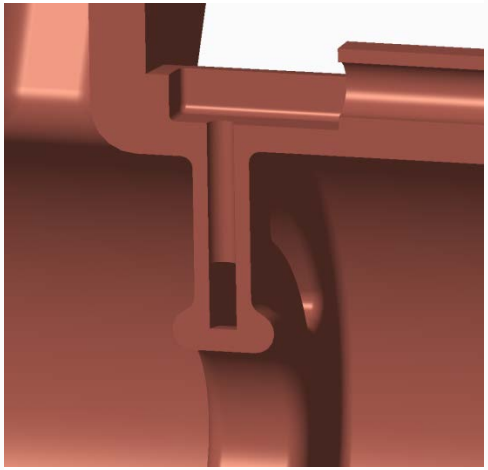

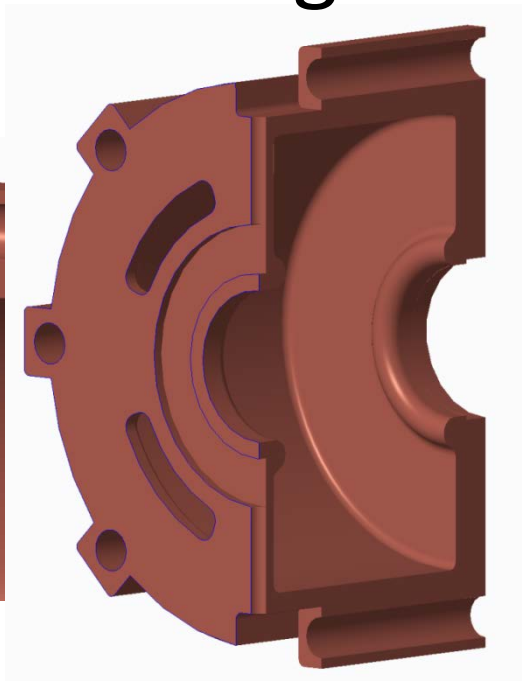

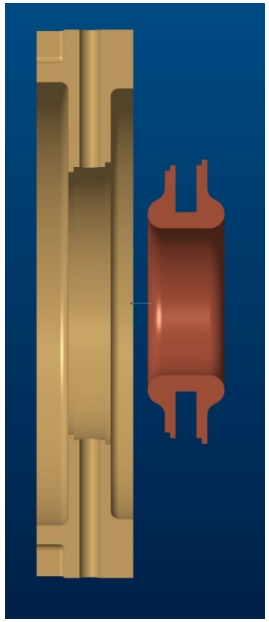

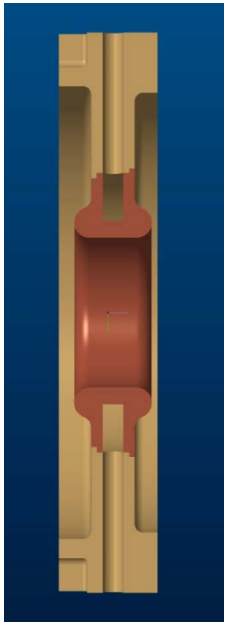

Table 1 - Maximum Recommended Water Velocities for Specific Materials

Water	
Low carbon steel	10 ft/sec
Stainless steel	15 ft/sec
Aluminum	6 ft/sec
Copper	8 ft/sec
90-10 Cupronickel	10 ft/sec
70-30 Cupronickel	15 ft/sec

Thermal Simulation

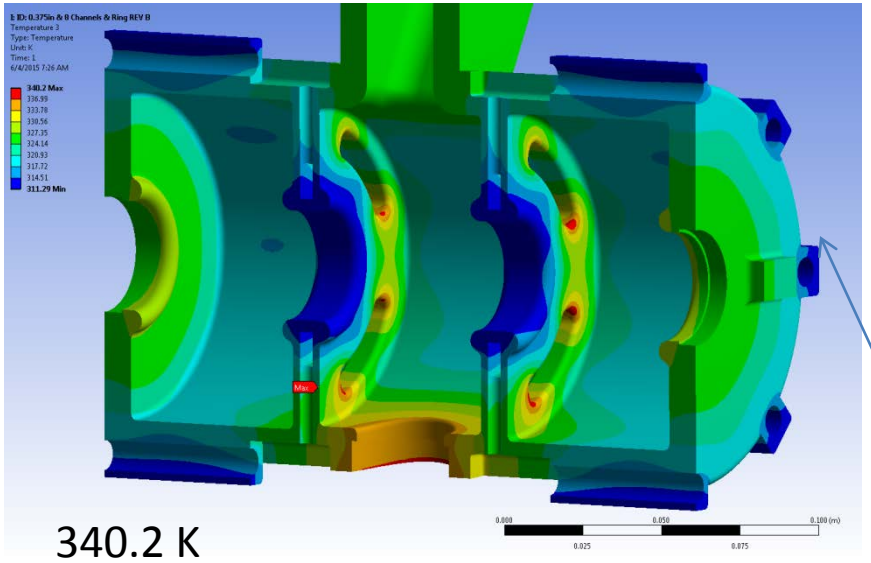

340.2 K

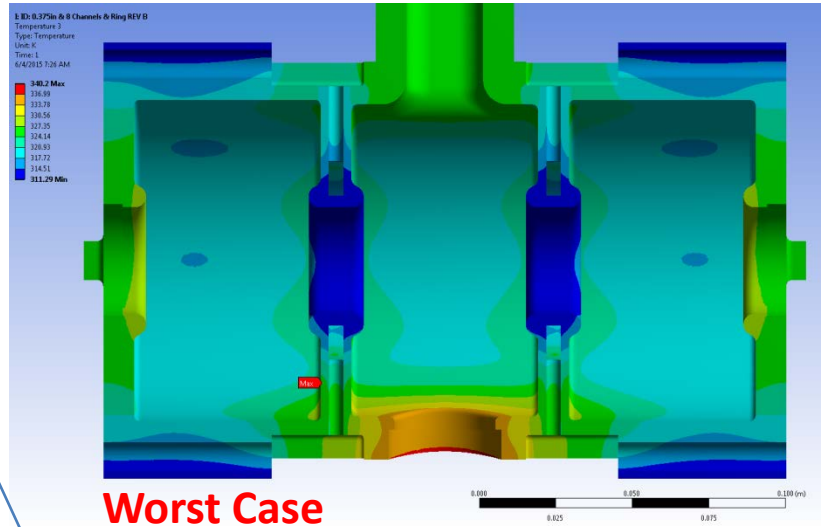

Worst Case

Water Ambient Temperature : 305.15 K

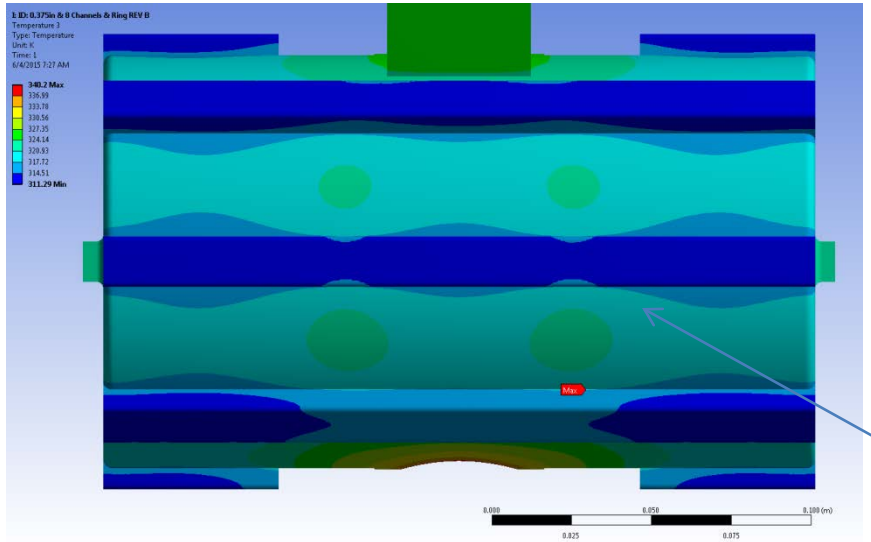

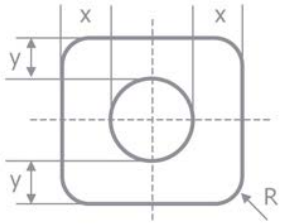

8494

OD	ID	x = y	R	
15.88	9.52	3.18	1.5	mm
0.625195	0.374802019	0.125196	0.059055	in
Flow		3		GPM
h			12131	W/m^2-K
Velocity			8.71	Ft/sec

h =	13153	W/m^2-K
Dh=	.2634	in
Flow	1.5	GPM
Velocity	8.83	Ft/sc

Structural Simulation

Fix Support

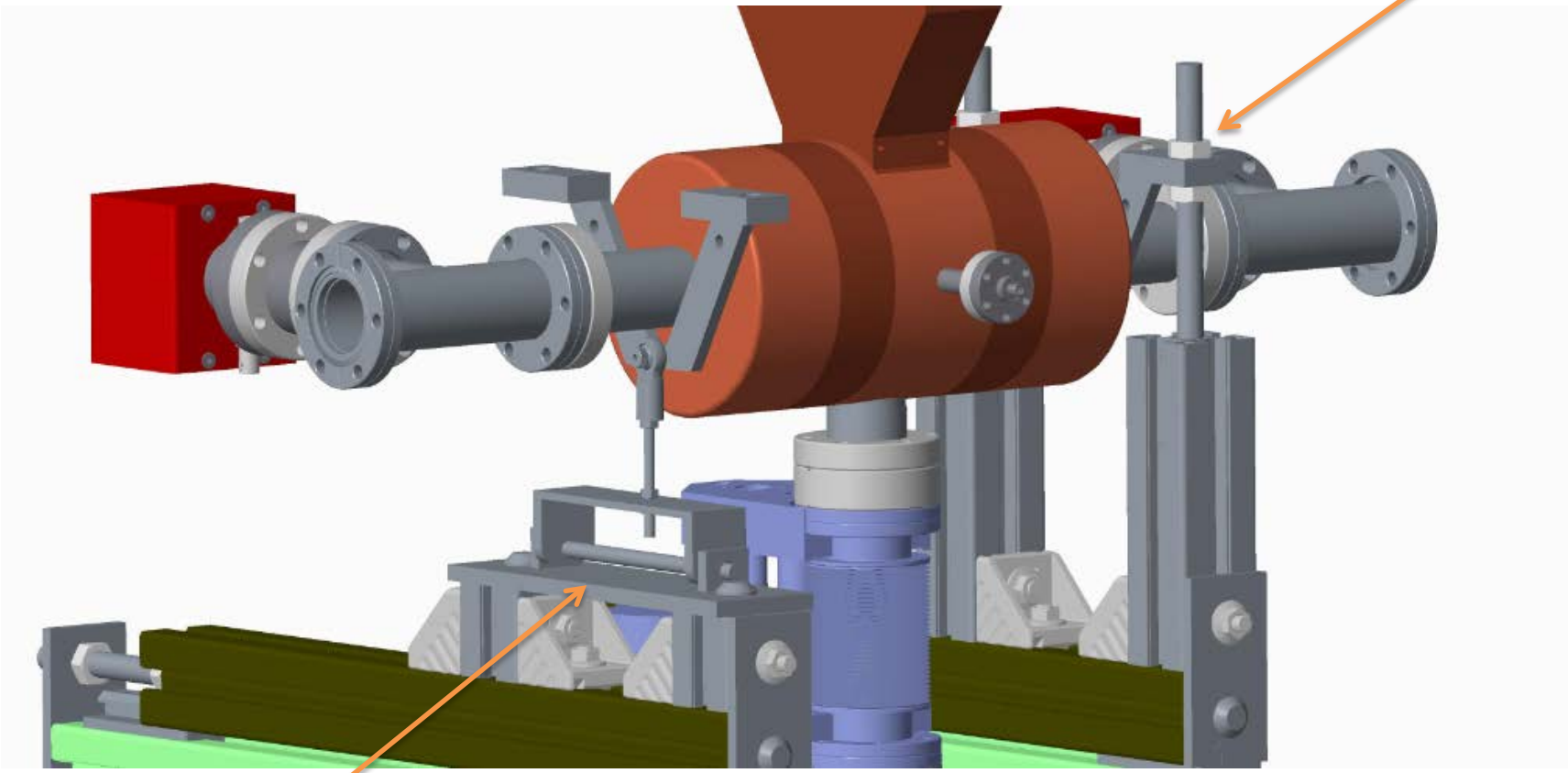

Sliding and Rotating Support

Structural Simulation

Without vacuum & displacement on one end

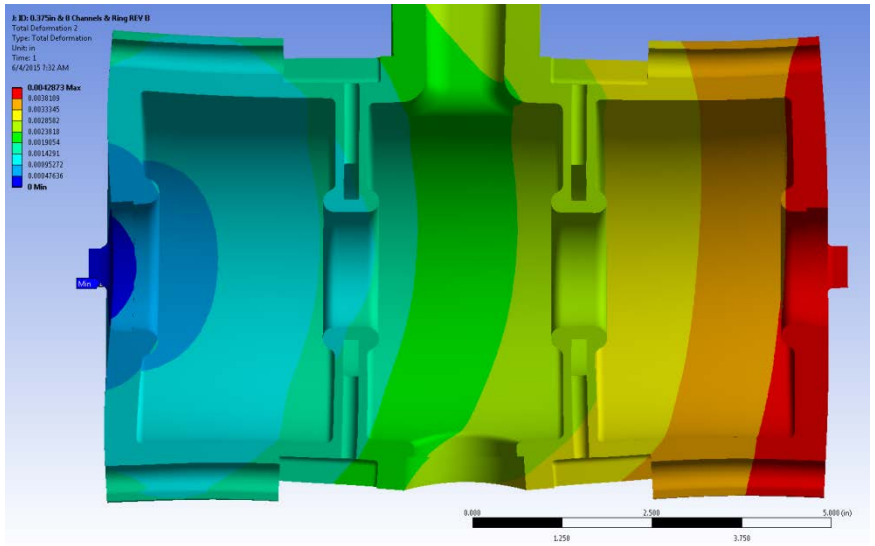

Axial thermal expansion: 0.0043”

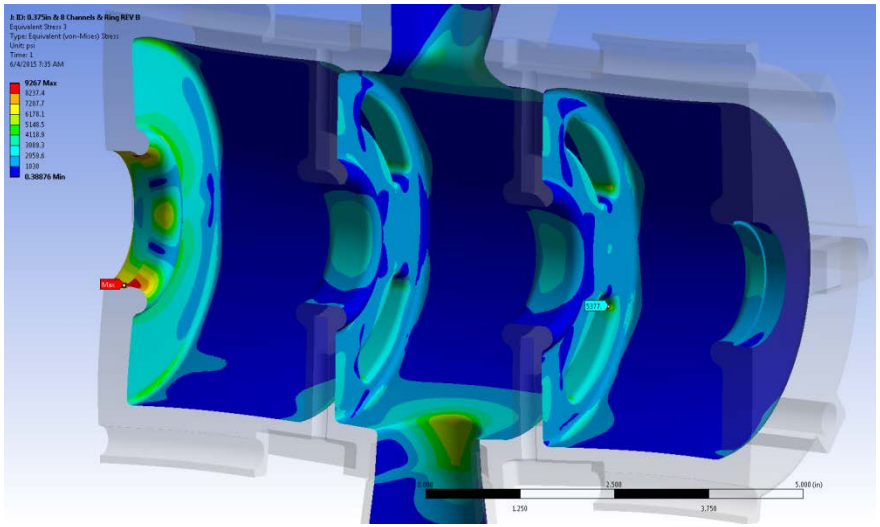

9267 psi

Coupling Slots Sizing: 0.0005m

Body sizing: 0.001m

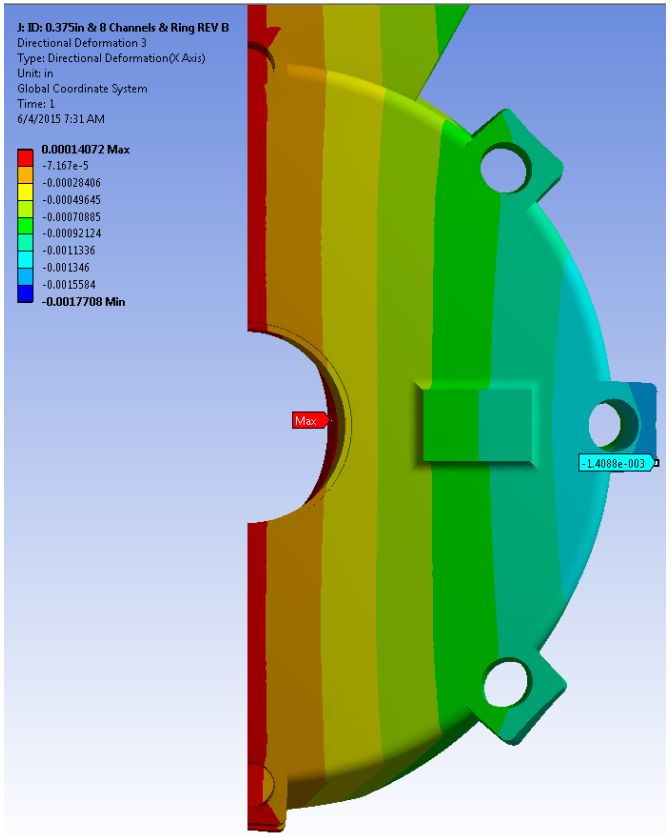

Radial thermal expansion: 0.0014”

Frequency Shift and Tuning

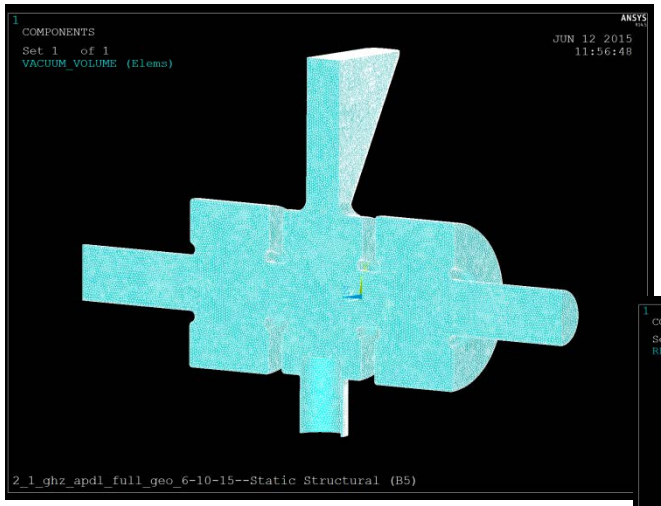

9254748 elements
12963308 nodes

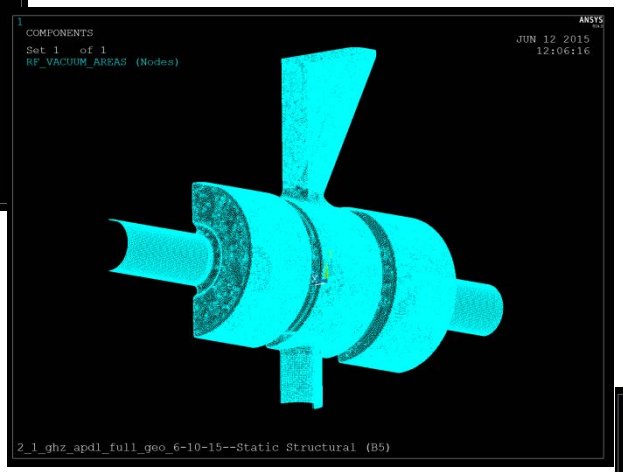

17562405 elements
23836406 nodes

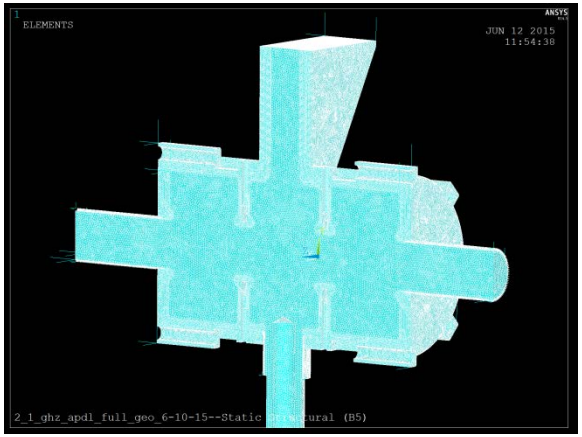

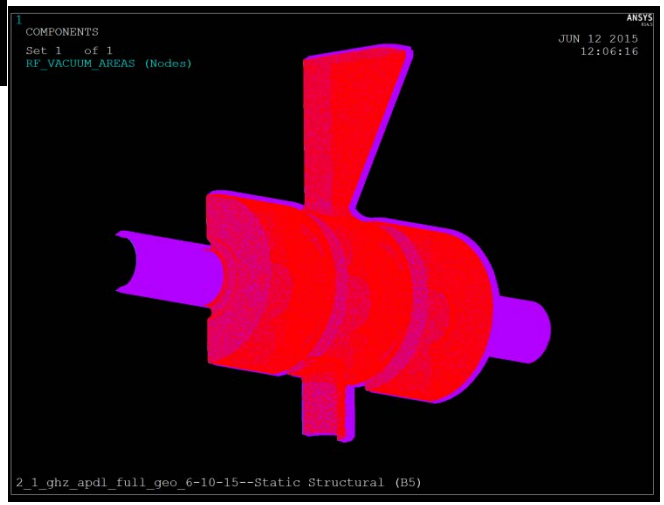

E-sum Nodal Solution

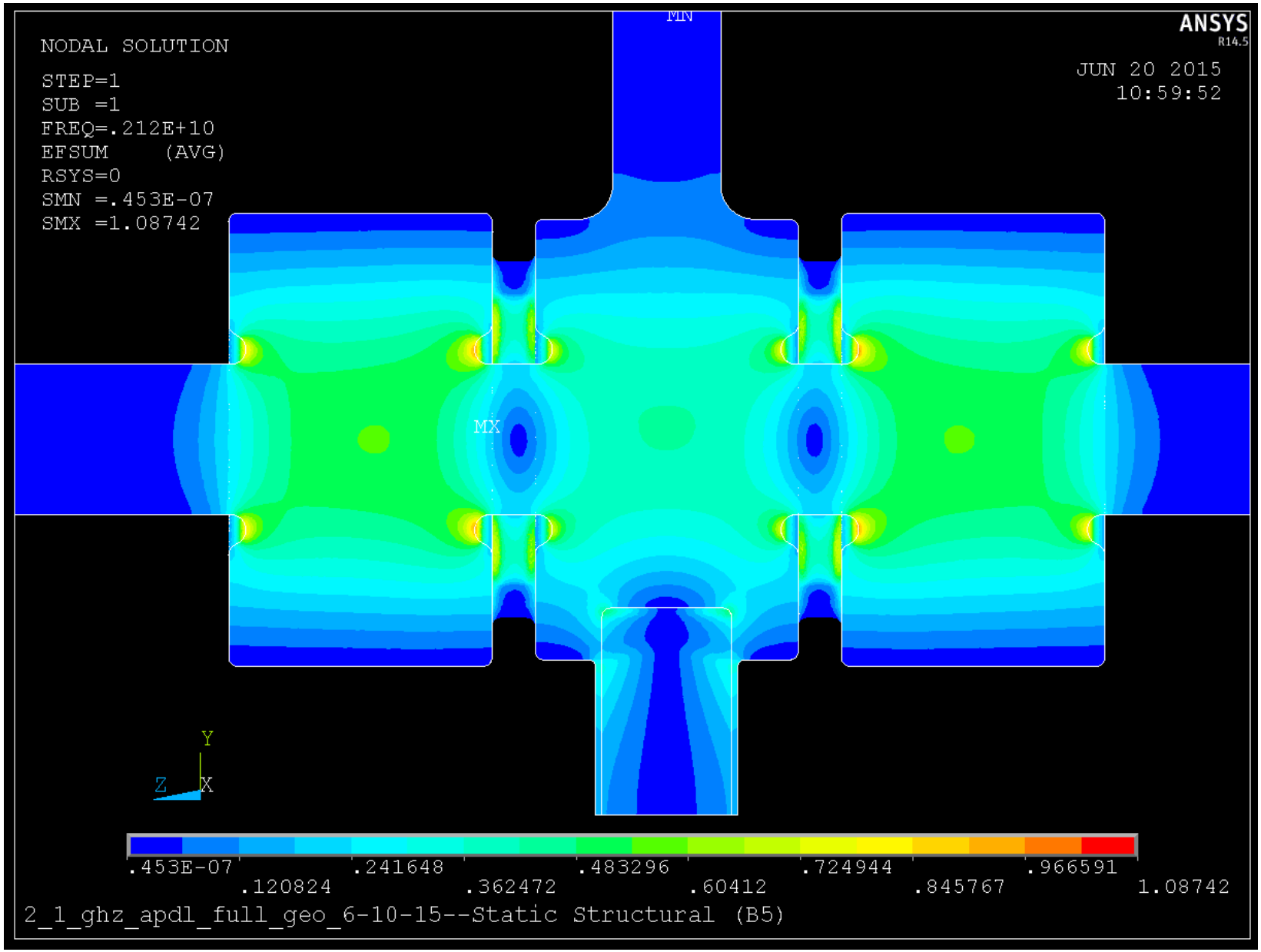

E-sum Nodal Solution

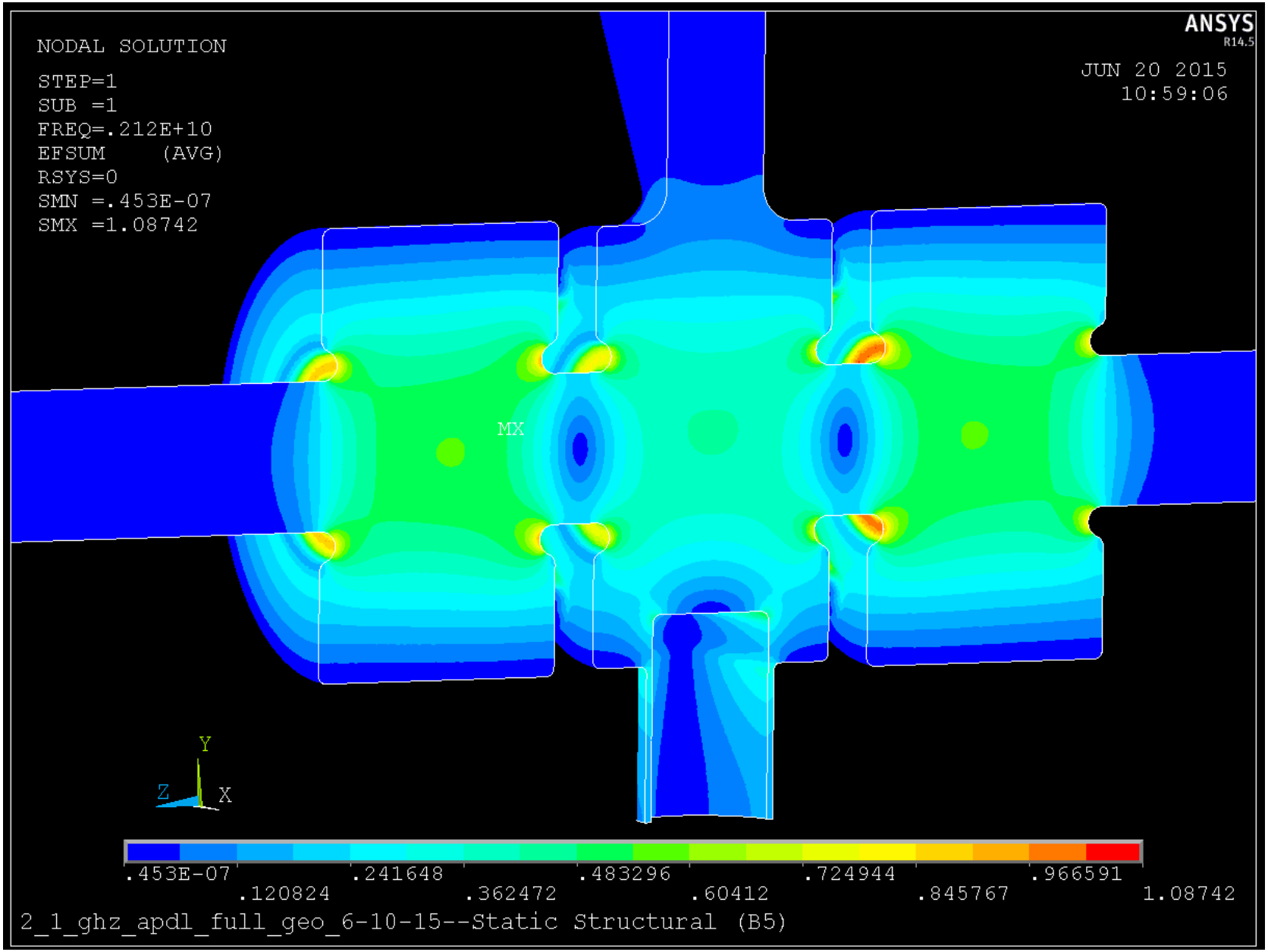

H-sum Nodal Solution

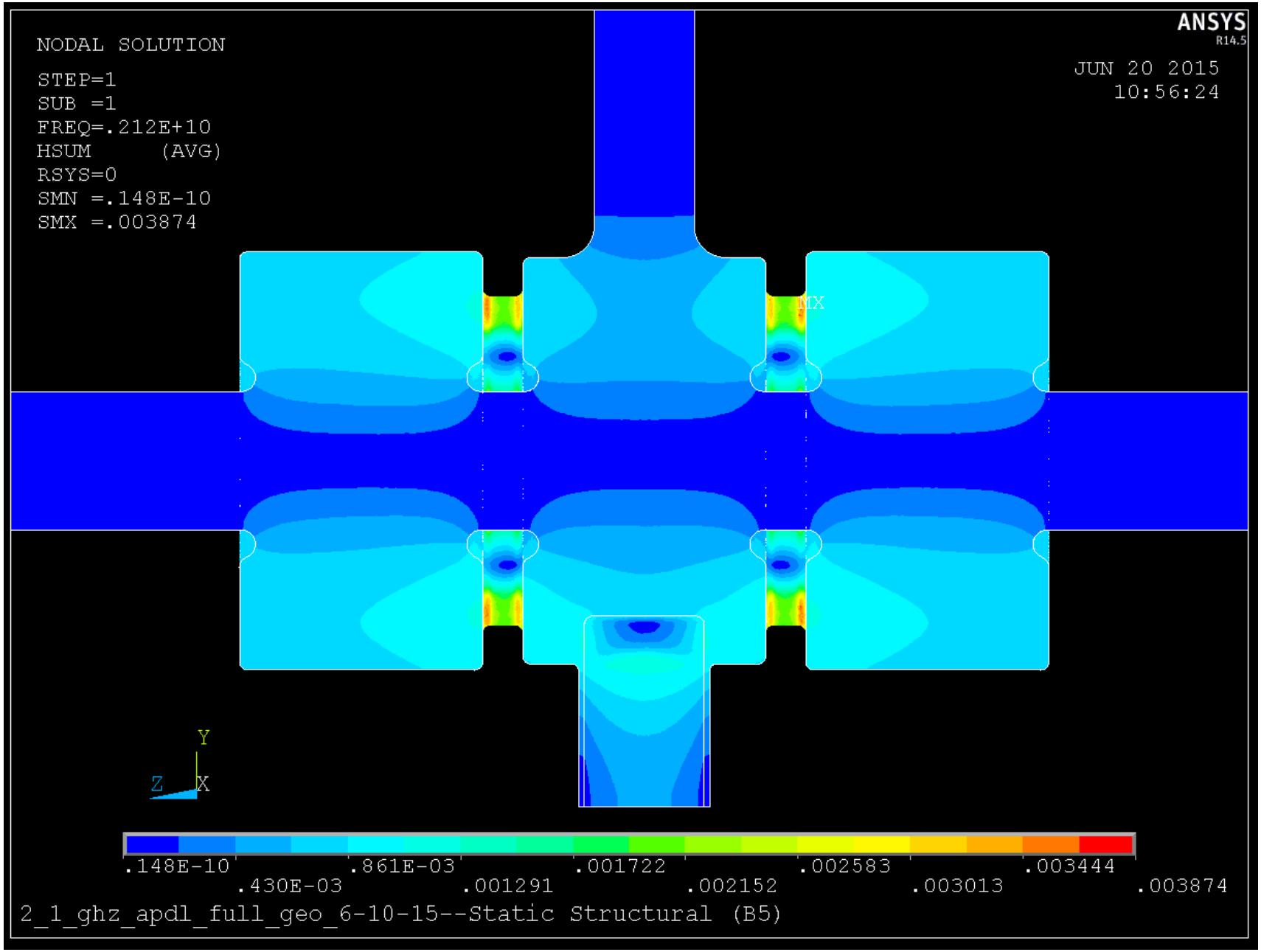

H-sum Nodal Solution

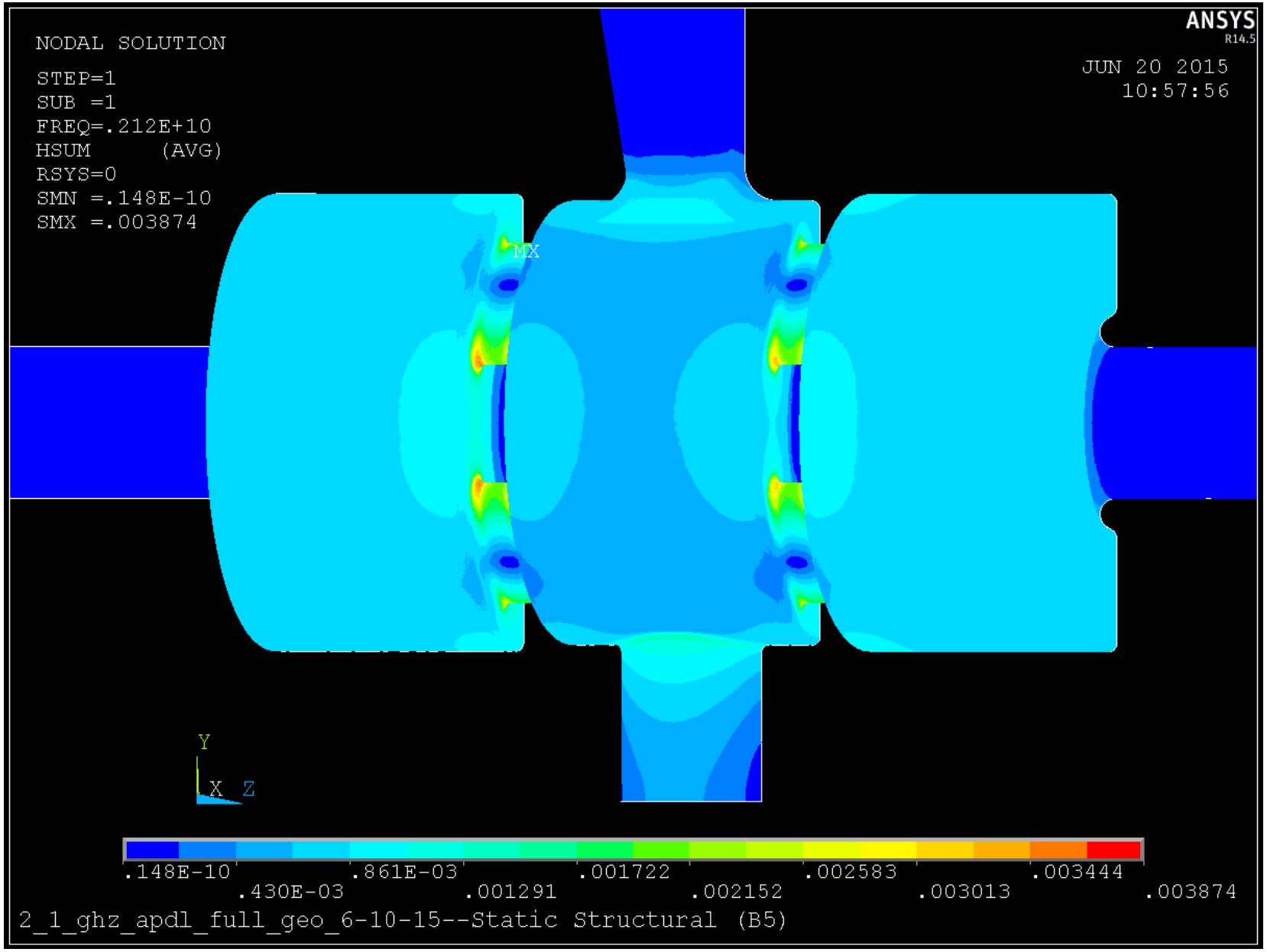

E-field along beam axis

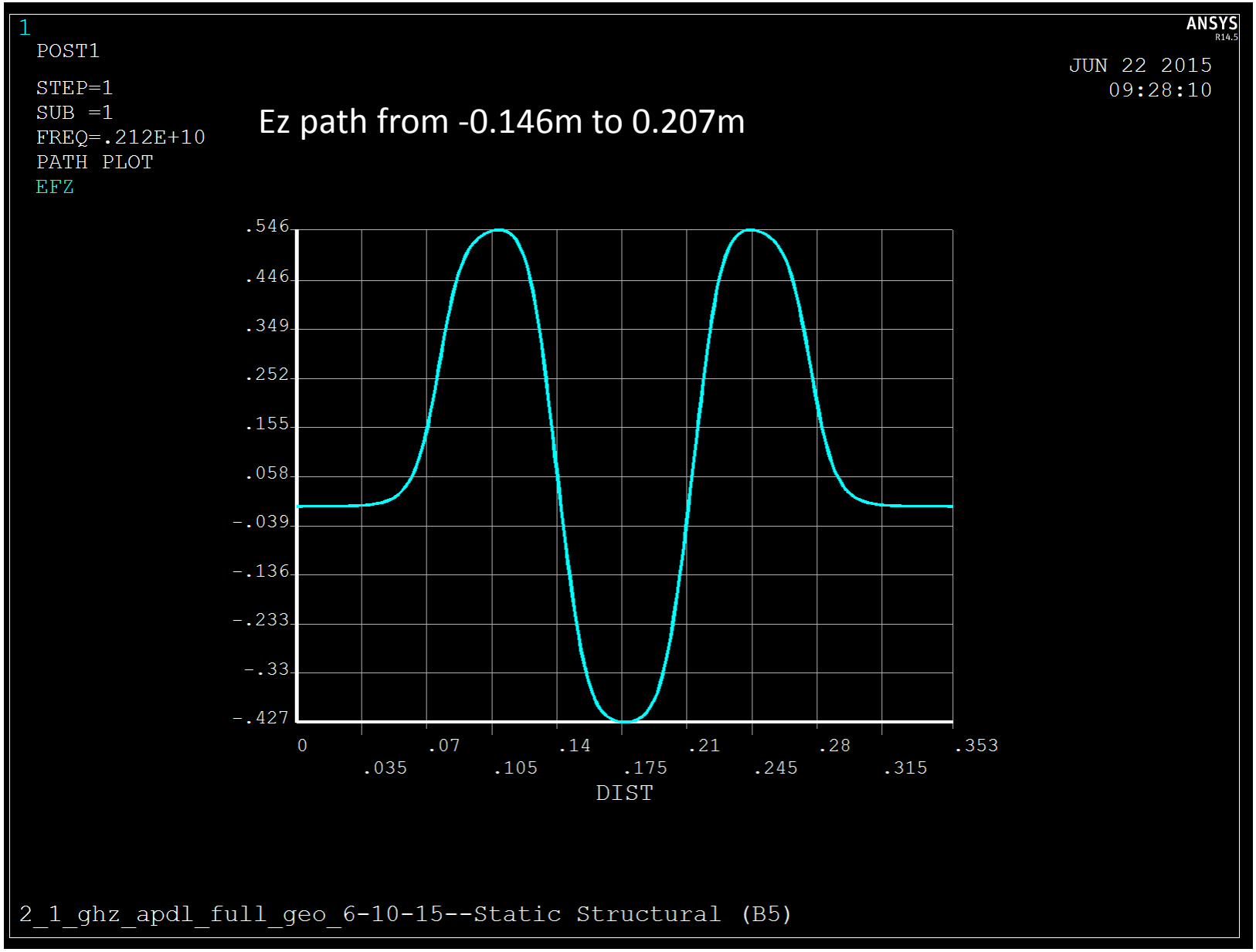

RF Results

ANSYS	Freq.	2.1154457 GHz
	U @ 250KV	0.0096875 J
	Est. Power Loss	9006.96 W
	Epk @ 250KV	4.5751E6 V/m
	Hpk @ 250KV	1.6299E4 A/m
	Integ. Esum along Z @ 250KV	350005.26 V
	Q-factor	14296.2845

Scaling Factor = U_{250k}/U_{ansys}
= 0.0096875/2*0.273637E-15
= 1.770137079E13

Ez int 0.8319E-1

SSUM Command

File

```
SUM ALL THE ACTIVE ENTRIES IN THE ELEMENT TABLE

TABLE LABEL      TOTAL
HSUM          5603.89
EFSUM       0.180755E+07
_P           0.00000
VOLU        0.965956E-03
PLOSSD       0.00000
H_SQUARE     4.58753
E_SQUARE     619969.
UH_ELM      0.273610E-15
UE_ELM      0.273637E-15
```

```
***** ANSYS - ENGINEERING ANALYSIS SYSTEM  RELEASE 14.5      ***
ANSYS Multiphysics
00331714          VERSION=WINDOWS x64   15:00:40  JUN 19, 2015

2_1_ghz_apdl_full_geo_6-10-15--Static Structural (B5)

*** FREQUENCIES FROM BLOCK LANCZOS ITERATION ***

  FREQUENCY RANGE REQUESTED=  0.210000E+10  0.220000E+10

  MODE    FREQUENCY (HERTZ)

   1      2115445725.041
```

```
_____________ SUMMARY OF POWER LOSS CALCULATION _____________

Load step =   1.   Substep =   1.   Freq.=  0.2115E+10

Time average dielectric loss = 0 Watts.

Time average surface loss = 2.544142132E-10 Watts.

Total time average loss = 2.544142132E-10 Watts.

Parameter defined for power loss: PAVG.
Element table item for dielectric power loss density: PLOSSD.
```

qfact.out

File

```
_____________ SUMMARY OF QUALITY FACTOR CALCULATION _____________

Frequency:   2.115 (GHz)

Q-factor with dielectric loss: Qd = 0.

Q-factor with surface ohmic loss: Qc = 14296.2845.

Q-factor with dielectric and surface ohmic loss: Q = 14296.2845.
```

Thermal Simulation

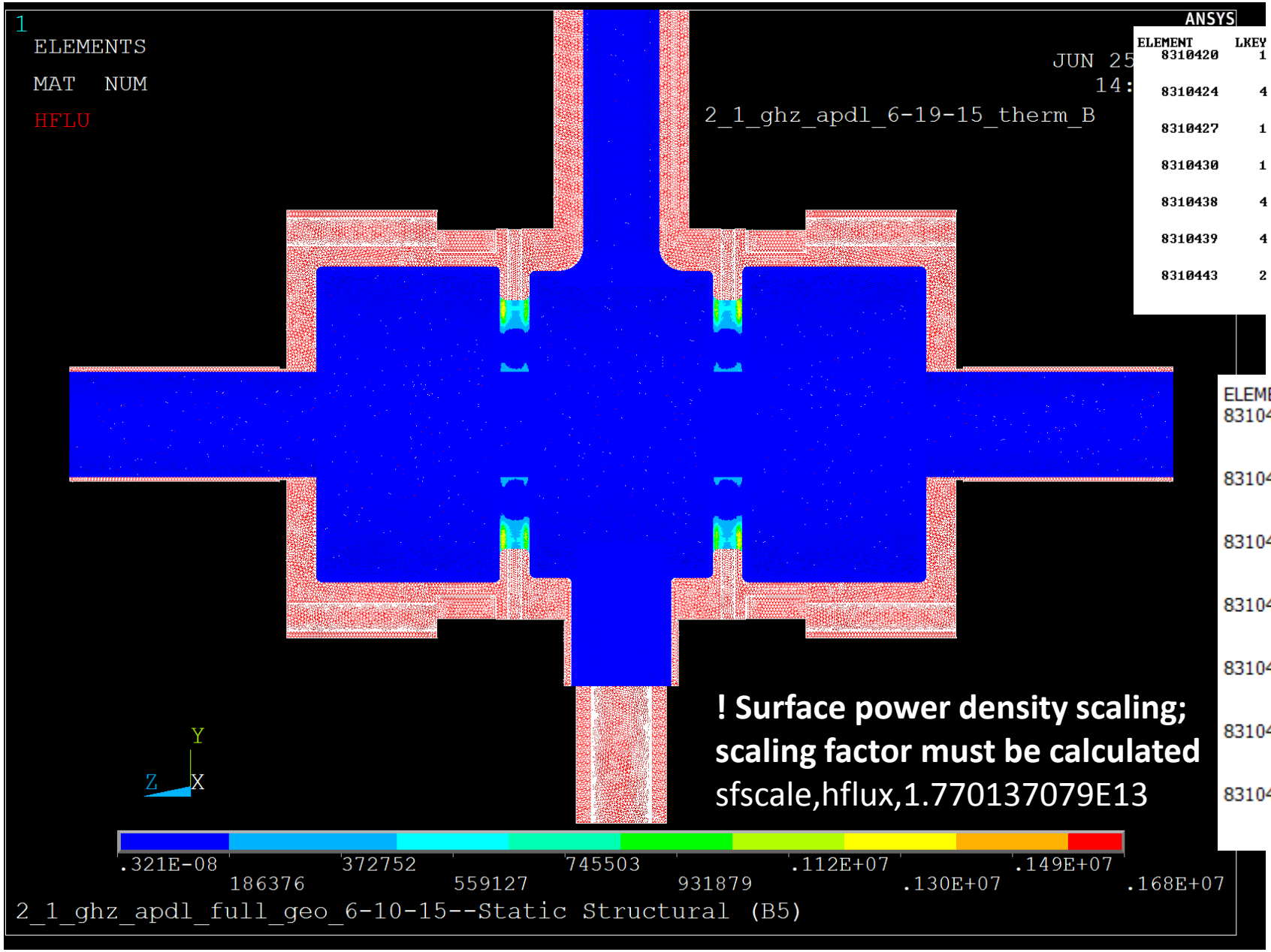

Thermal Simulation

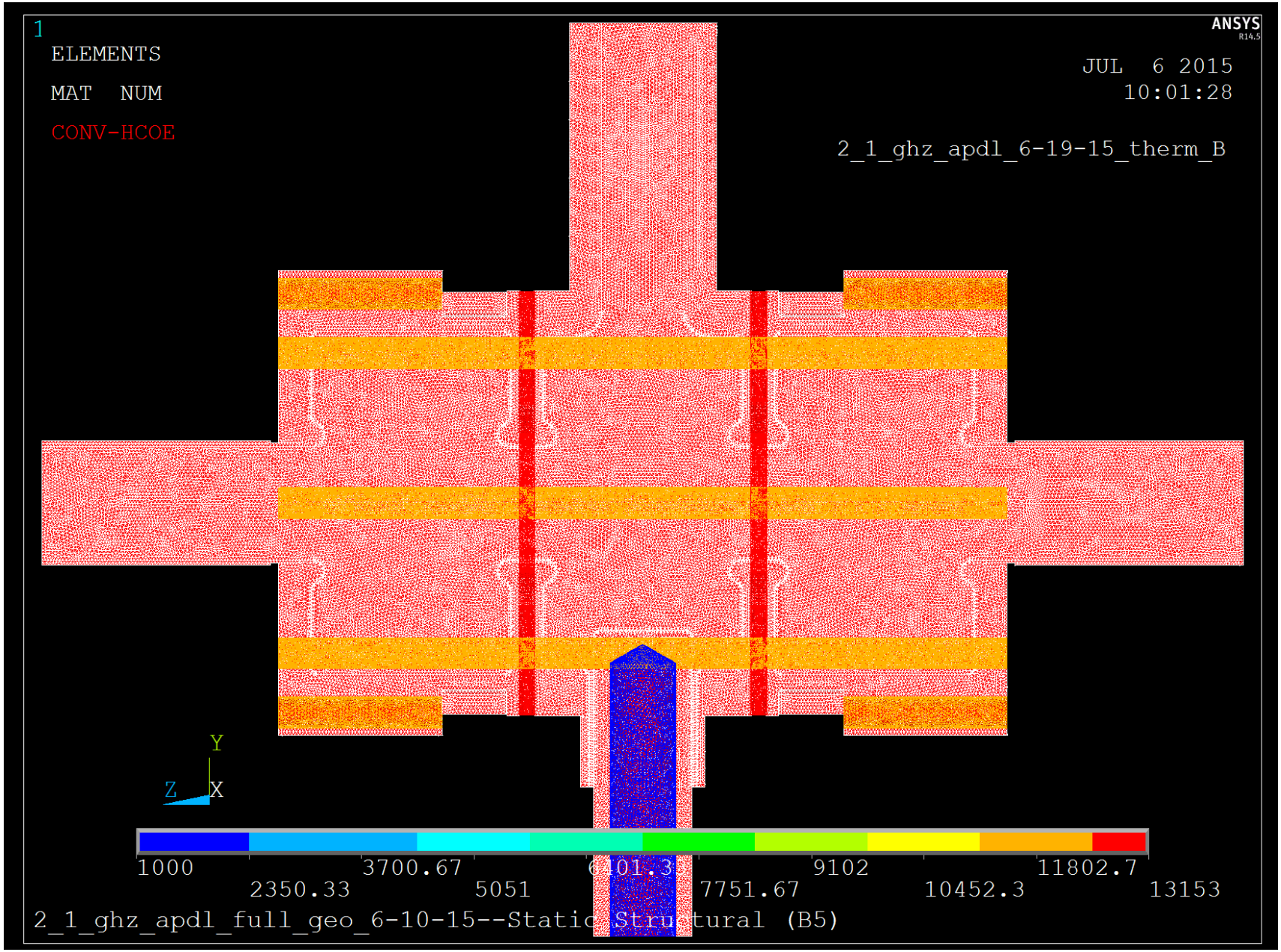

Thermal Simulation

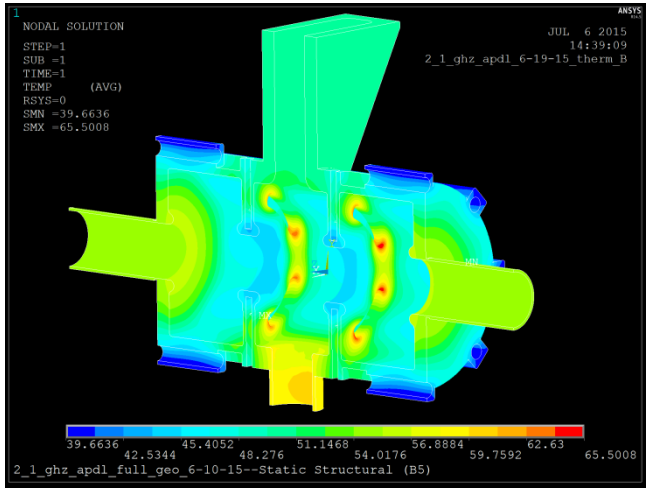

665.5 C = 338.65 K

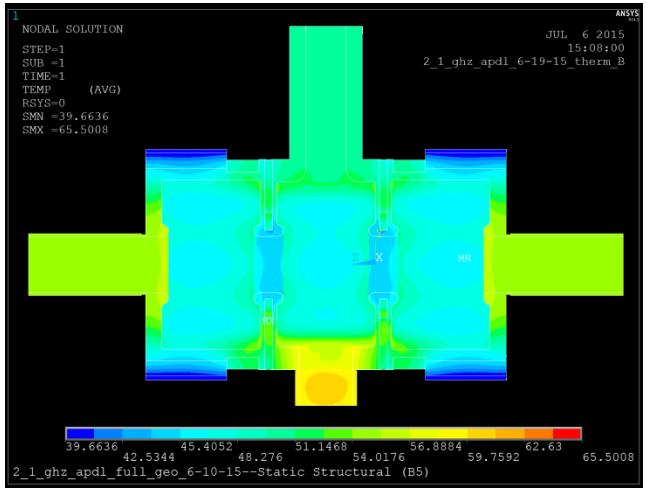

Worst Case

Water Ambient Temperature : 305.15 K

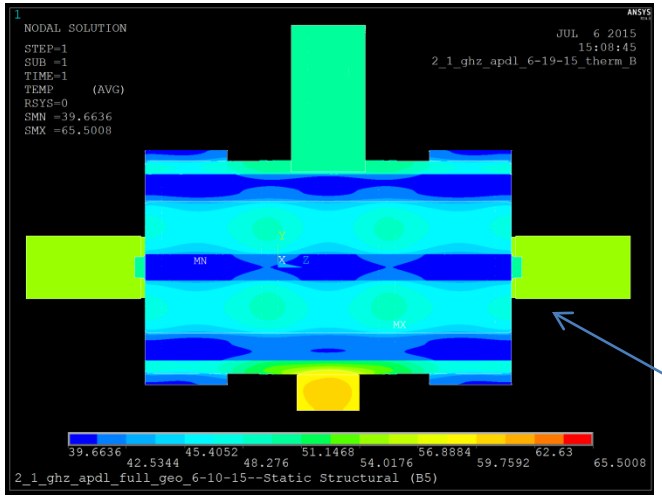

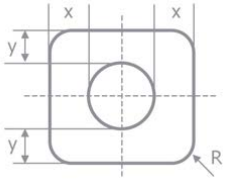

8494

OD	ID	x = y	R	
15.88	9.52	3.18	1.5	mm
0.625195	0.374802019	0.125196	0.059055	in
Flow		3		GPM
h			12131	W/m^2-K
Velocity			8.71	Ft/sec

h =	13153	W/m^2-K
Dh=	.2634	in
Flow	1.5	GPM
Velocity	8.83	Ft/sc

mp,kxx,14,401 **!* Thermal Conductivity**

Thermal Simulation

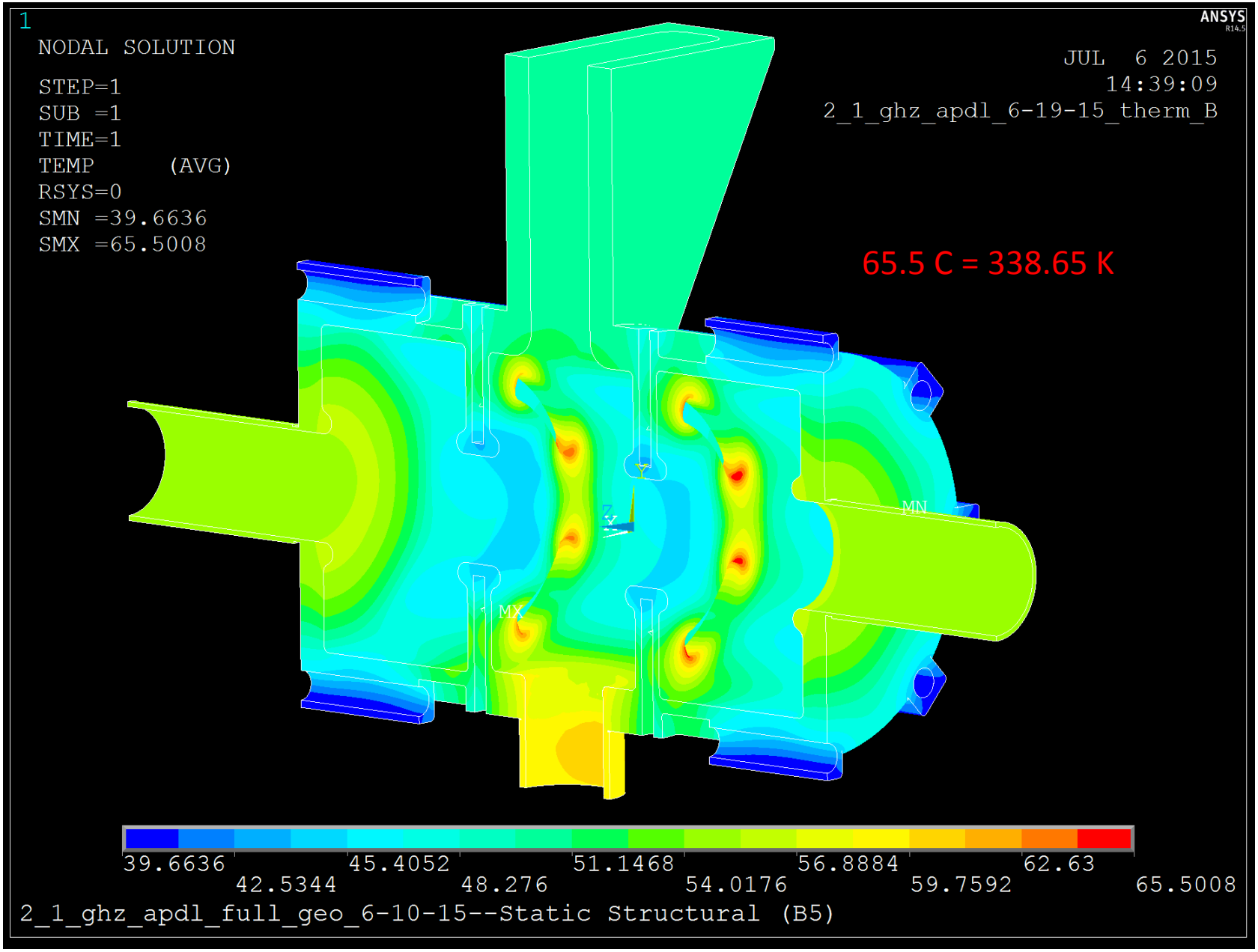

Thermal Simulation

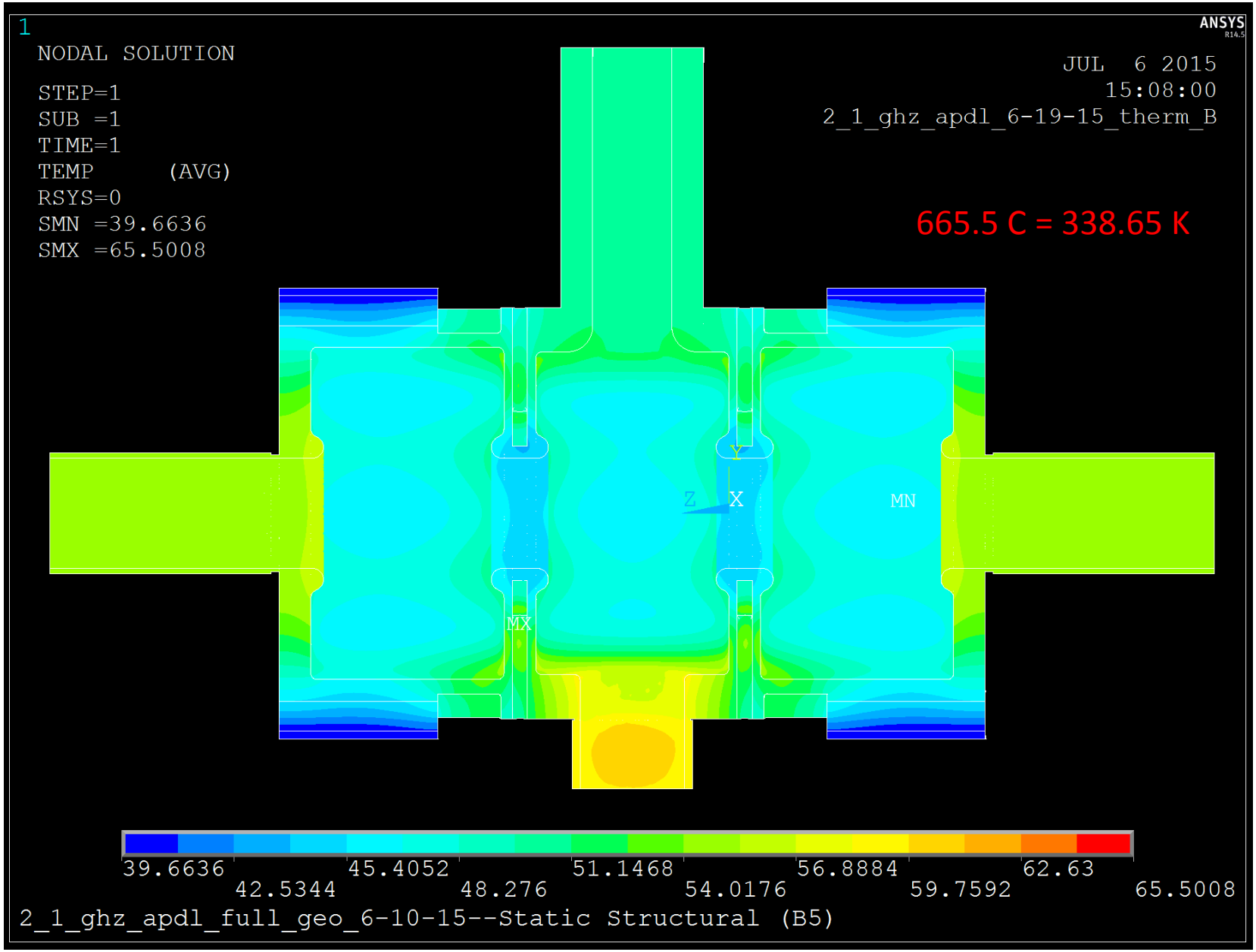

Thermal Simulation

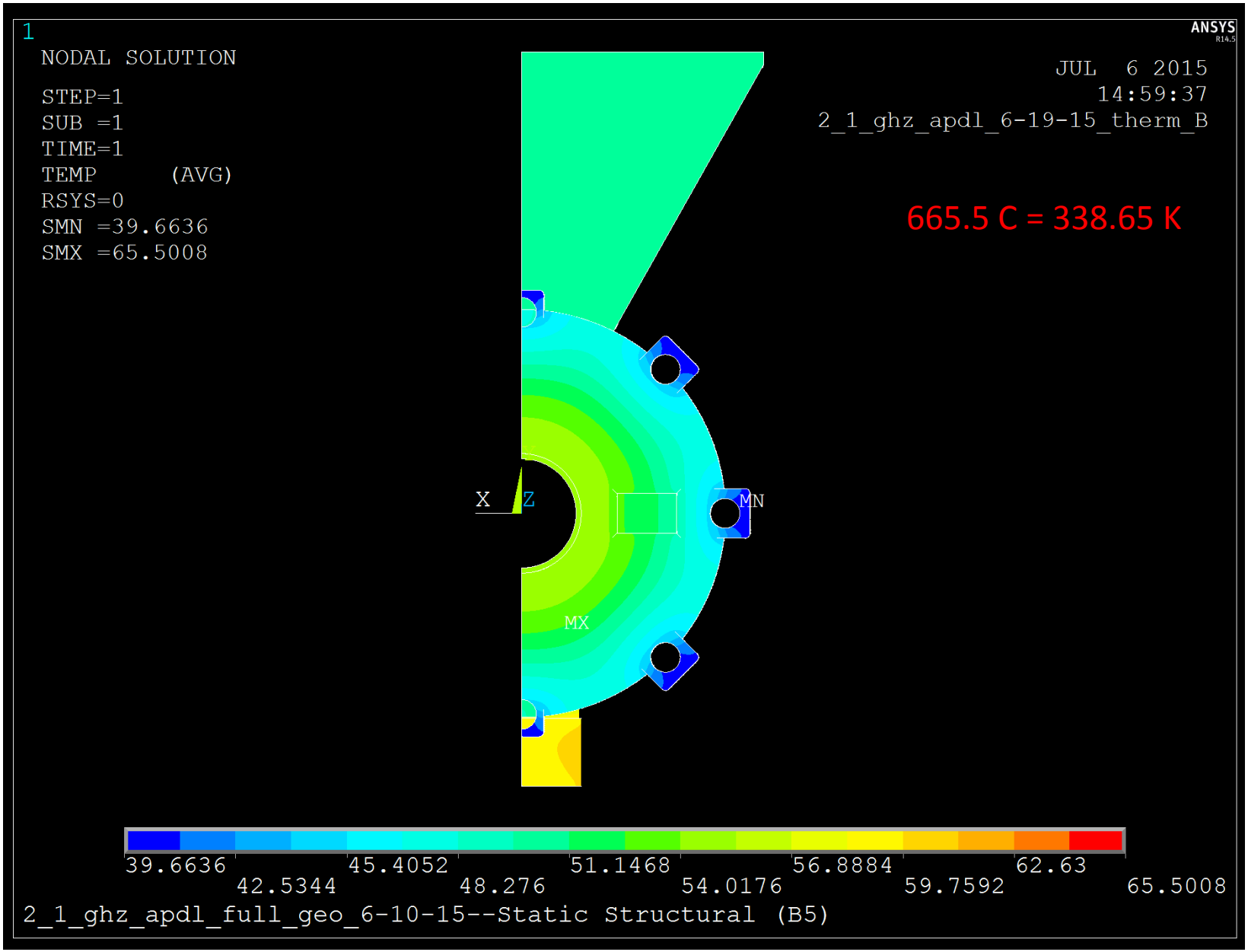

Structural Simulation

```
mp,ex,15,129.8E9        !* Young's Modulus (Pa) copper
mp,kxx,15,401           !* Thermal Conductivity
mp,alpx,15,1.77e-5      !* Coefficient of Thermal Expansion
mp,nuxy,15,0.343        !* Poisson's Ratio

mp,ex,15,10             !* Young's Modulus (Pa) Vacuum
```

Coupling Slots Sizing: 0.0005m

Body sizing: 0.001m

Without vacuum & displacement on one end

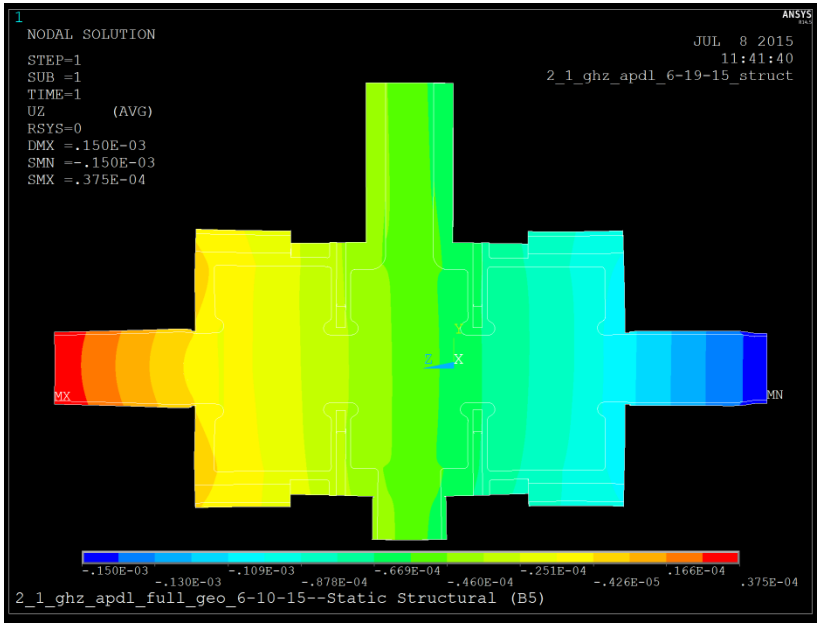

Axial thermal expansion:
0.15E-3 m = 0.0059”

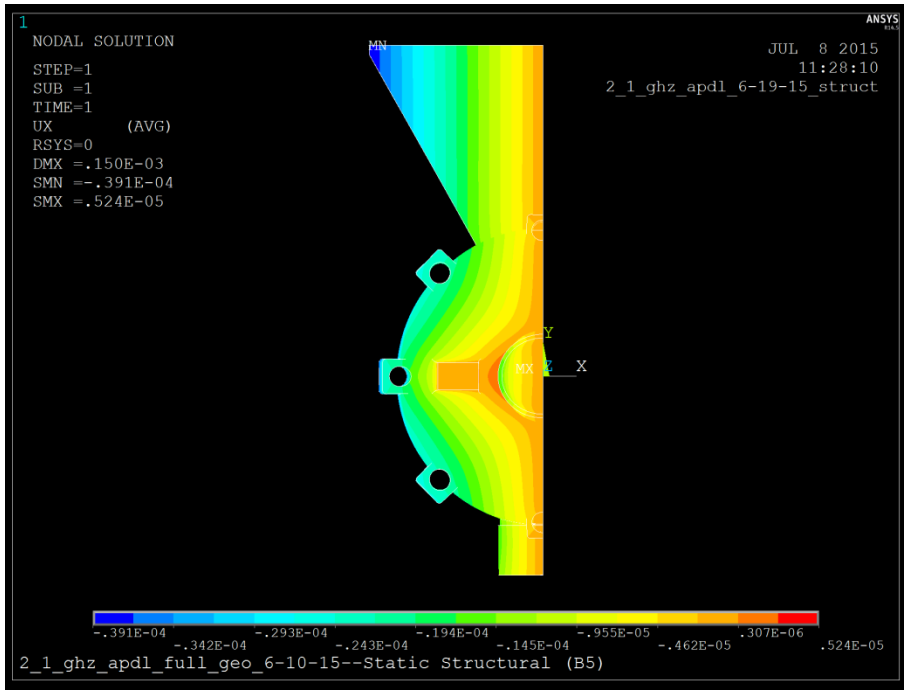

Radial thermal expansion:
0.391E-4 m = 0.0015 ”

Frequency Shift and Tuning

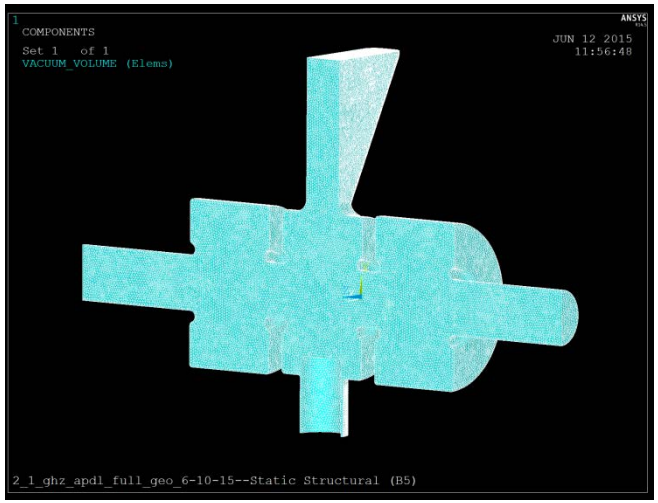

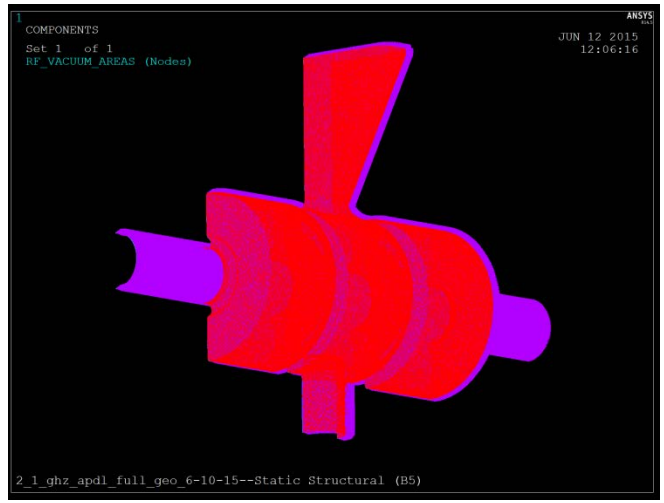

9254748 elements
12963308 nodes

```
***** ANSYS - ENGINEERING ANALYSIS SYSTEM  RELEASE 14.5      ***
ANSYS Multiphysics
00331714          VERSION=WINDOWS x64   15:00:40  JUN 19, 2015

2_1_ghz_apdl_full_geo_6-10-15--Static Structural (B5)

*** FREQUENCIES FROM BLOCK LANCZOS ITERATION ***

  FREQUENCY RANGE REQUESTED=  0.210000E+10  0.220000E+10

  MODE   FREQUENCY (HERTZ)

   1     2115445725.041
```

```
***** ANSYS - ENGINEERING ANALYSIS SYSTEM  RELEASE 14.5
ANSYS Multiphysics
00331714          VERSION=WINDOWS x64   22:13:49  JUL 08, 2

2_1_ghz_apdl_full_geo_6-10-15--Static Structural (B5)

*** FREQUENCIES FROM BLOCK LANCZOS ITERATION ***

  FREQUENCY RANGE REQUESTED=  0.210000E+10  0.220000E+10

  MODE   FREQUENCY (HERTZ)

   1     2113456623.968
```

Frequency Shift = Ideal Shape Frequency – Steady State Deformed Shape Frequency
=2115445725.041Hz – 2113456626.968 Hz
= 1989098.073 Hz
= 1.989 MHz

5MHz Tuning Range of tuner

E-sum Nodal Solution

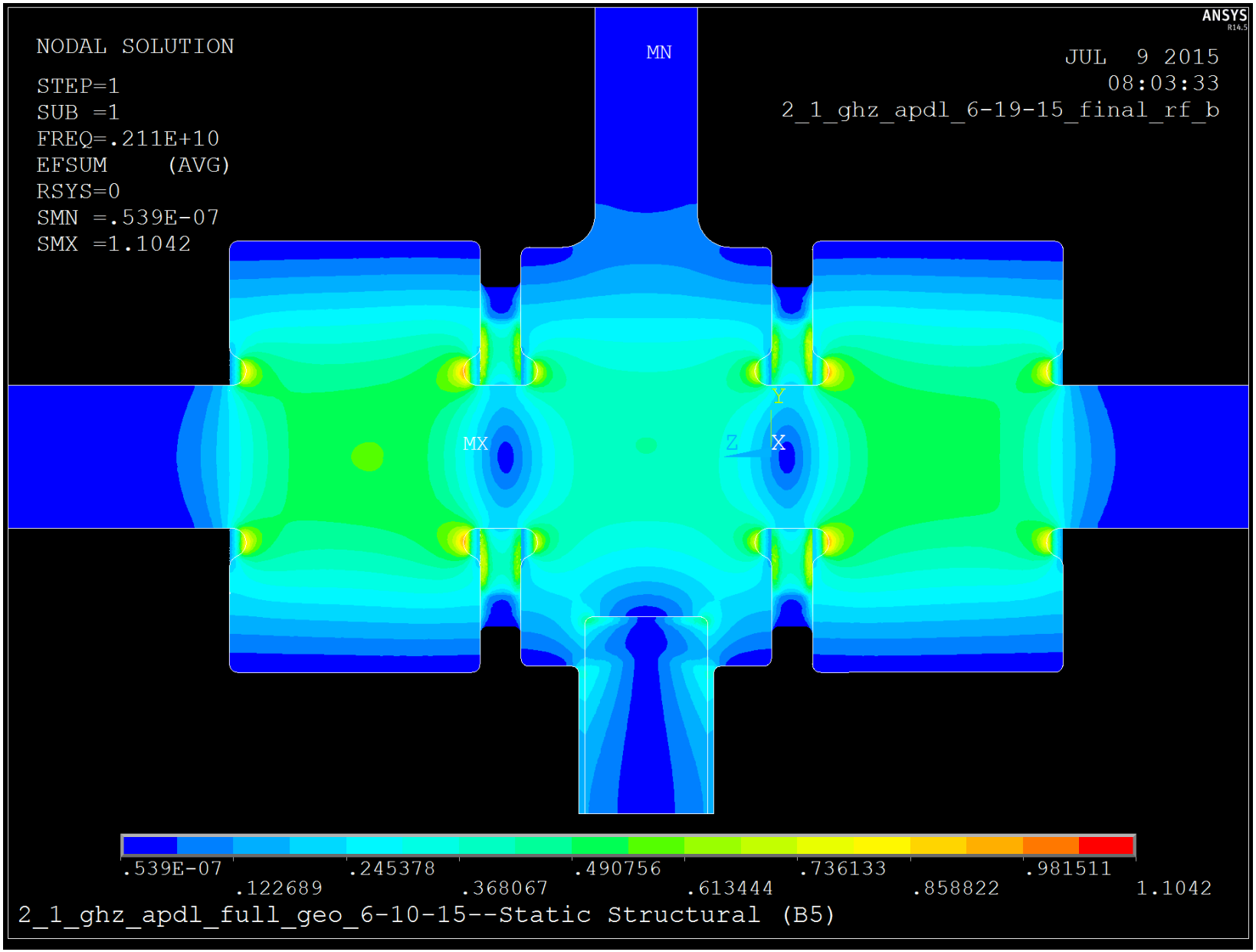

E-sum Nodal Solution

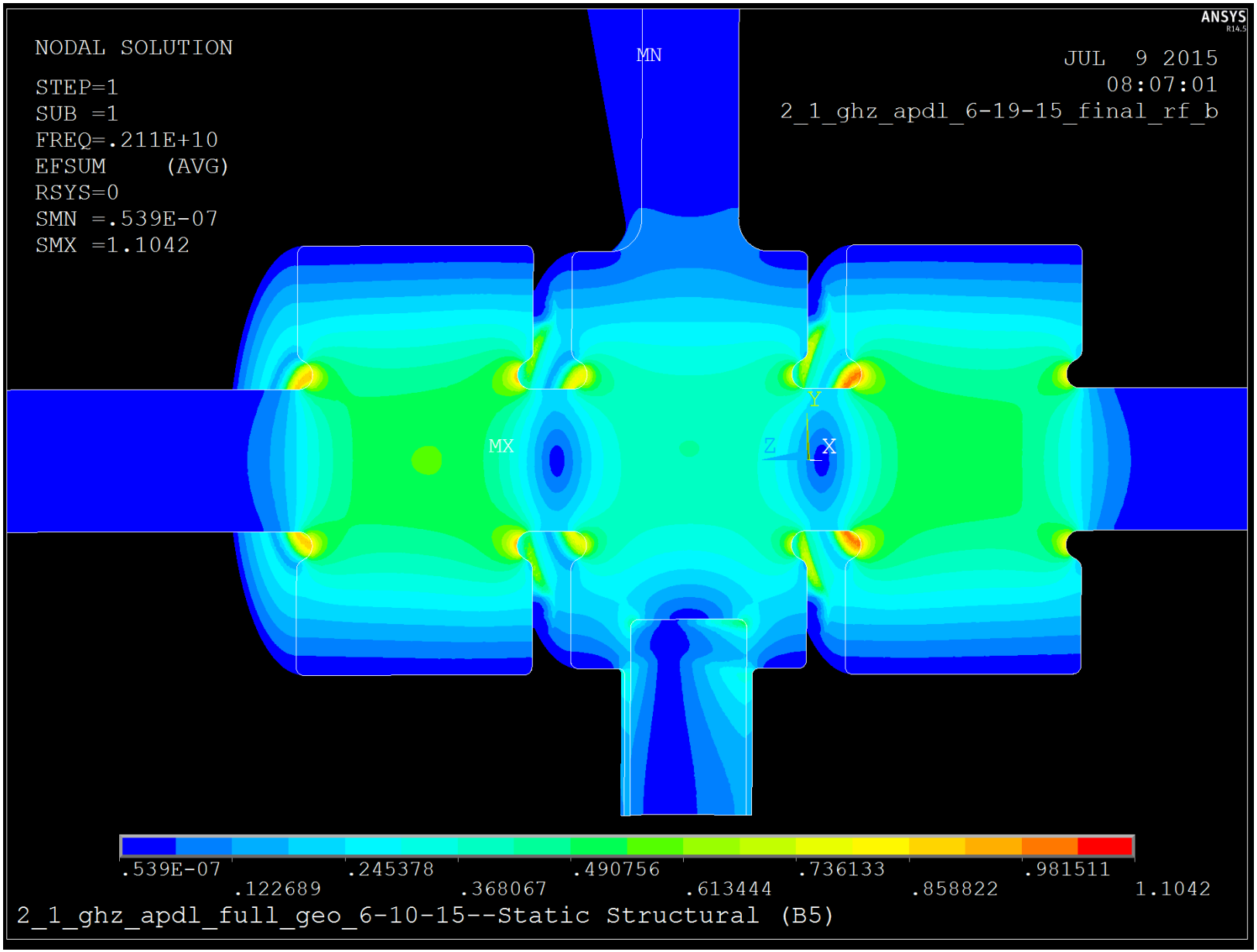

H-sum Nodal Solution

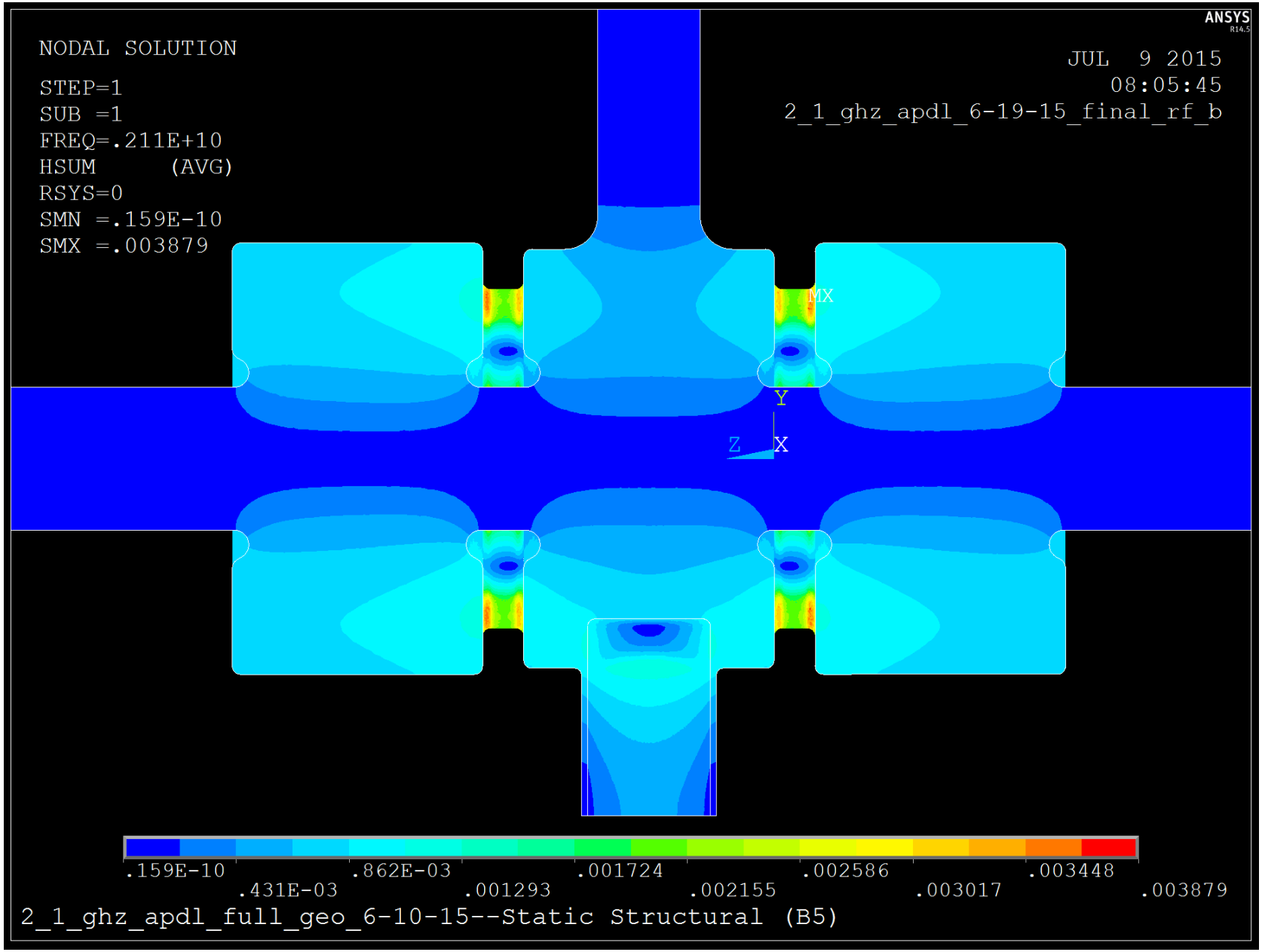

H-sum Nodal Solution

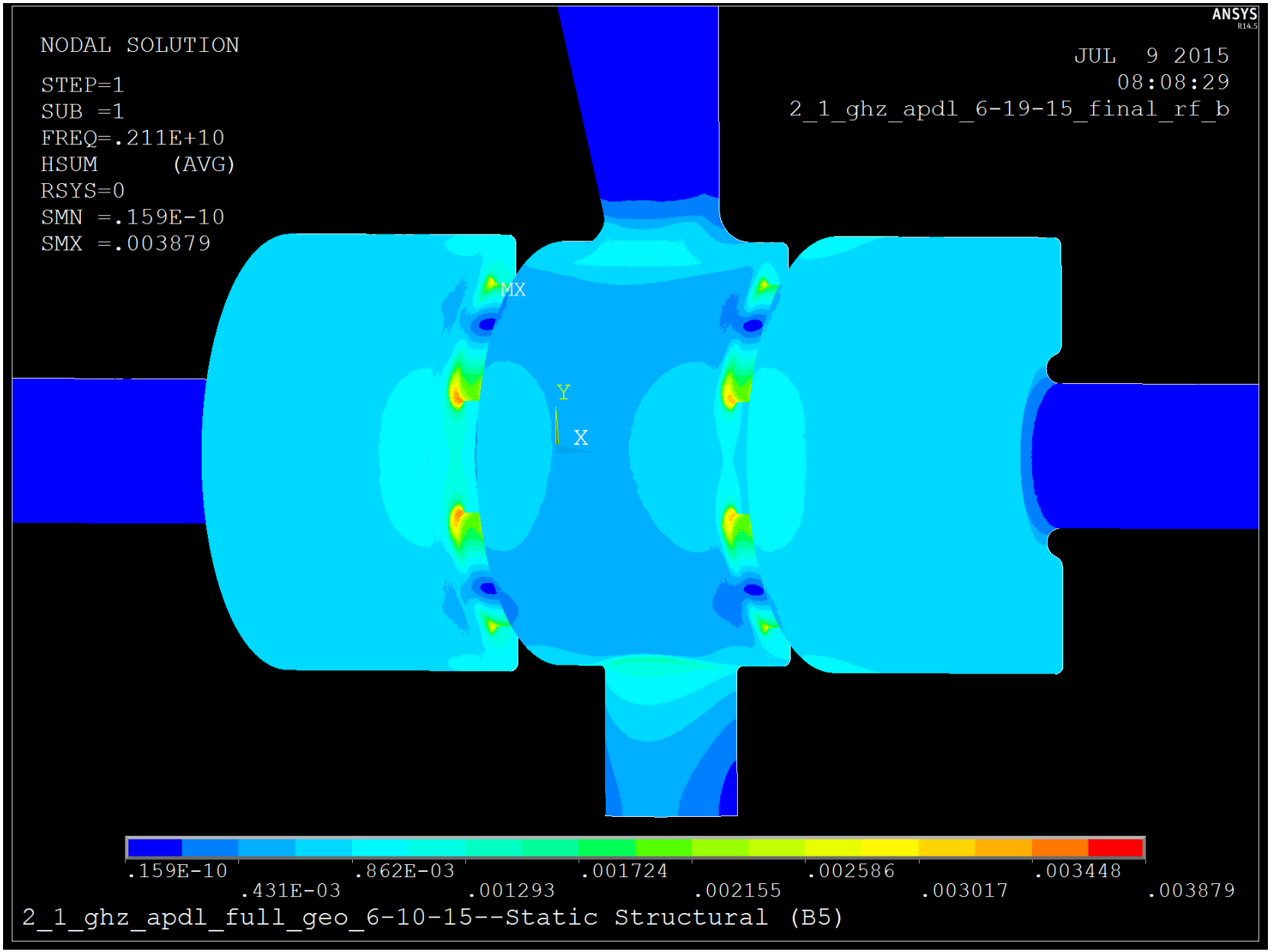

RF Results

ANSYS	Freq.	2.113456626 GHz
	U @ 250KV	0.0096875 J
	Est. Power Loss	8993.06 W
	Epk @ 250KV	4.6045E6 V/m
	Hpk @ 250KV	1.6175E4 A/m
	Integ. Esum along Z @ 250KV	349828.06 V
	Q-factor	14304.927

Scaling Factor = U_{250k}/U_{ansys}
= 0.0096875/2*0.273637E-15
= 1.738915814E13

Ez int 0.83891E-1

SSUM Command

File

```
SUM ALL THE ACTIVE ENTRIES IN THE ELEMENT TABLE

TABLE LABEL      TOTAL
HSUM          5645.59
EFSUM       0.182112E+07
_P           0.00000
VOLU        0.968613E-03
PLOSSD       0.00000
H_SQUARE     4.65613
E_SQUARE     629369.
UH_ELM      0.278523E-15
UE_ELM      0.278550E-15
```

```
***** ANSYS - ENGINEERING ANALYSIS SYSTEM  RELEASE 14.5
ANSYS Multiphysics
00331714          VERSION=WINDOWS x64   22:13:49  JUL 08, 2

2_1_ghz_apdl_full_geo_6-10-15--Static Structural (B5)

*** FREQUENCIES FROM BLOCK LANCZOS ITERATION ***

  FREQUENCY RANGE REQUESTED=  0.210000E+10  0.220000E+10

  MODE    FREQUENCY (HERTZ)

   1      2113456623.968
```

powerh.out

File

```
____________ SUMMARY OF POWER LOSS CALCULATION ____________

Load step =   1.   Substep =   1.   Freq.=  0.2113E+10

Time average dielectric loss = 0 Watts.

Time average surface loss = 2.585822775E-10 Watts.

Total time average loss = 2.585822775E-10 Watts.

Parameter defined for power loss: PAVG.
Element table item for dielectric power loss density: PLOSSD.
_____________________________________________________________
```

qfact.out

File

```
____________ SUMMARY OF QUALITY FACTOR CALCULATION ____________

Frequency:   2.113 (GHz)

Q-factor with dielectric loss: Qd = 0.

Q-factor with surface ohmic loss: Qc = 14304.927.

Q-factor with dielectric and surface ohmic loss: Q = 14304.927.

_____________________________________________________________
```

2.1 GHz Cavity

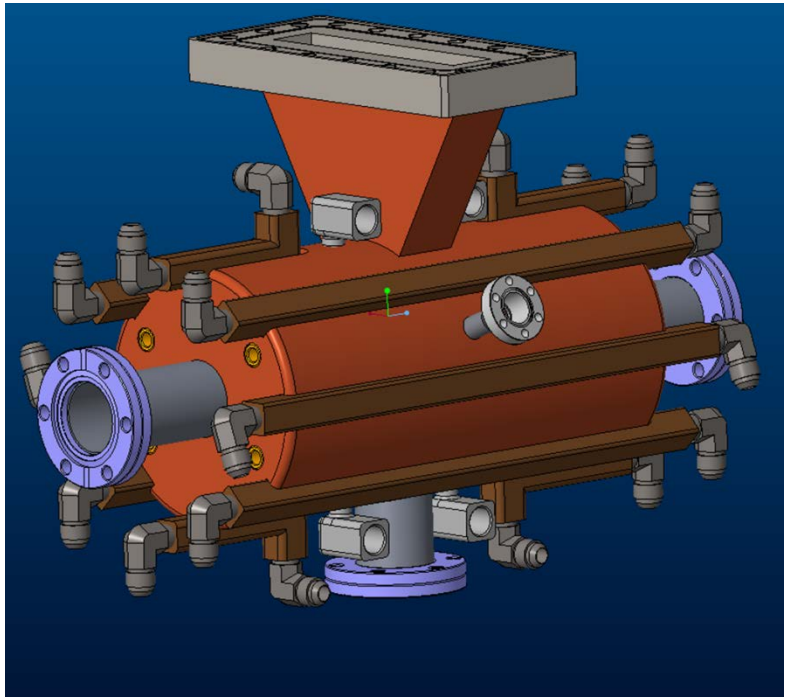

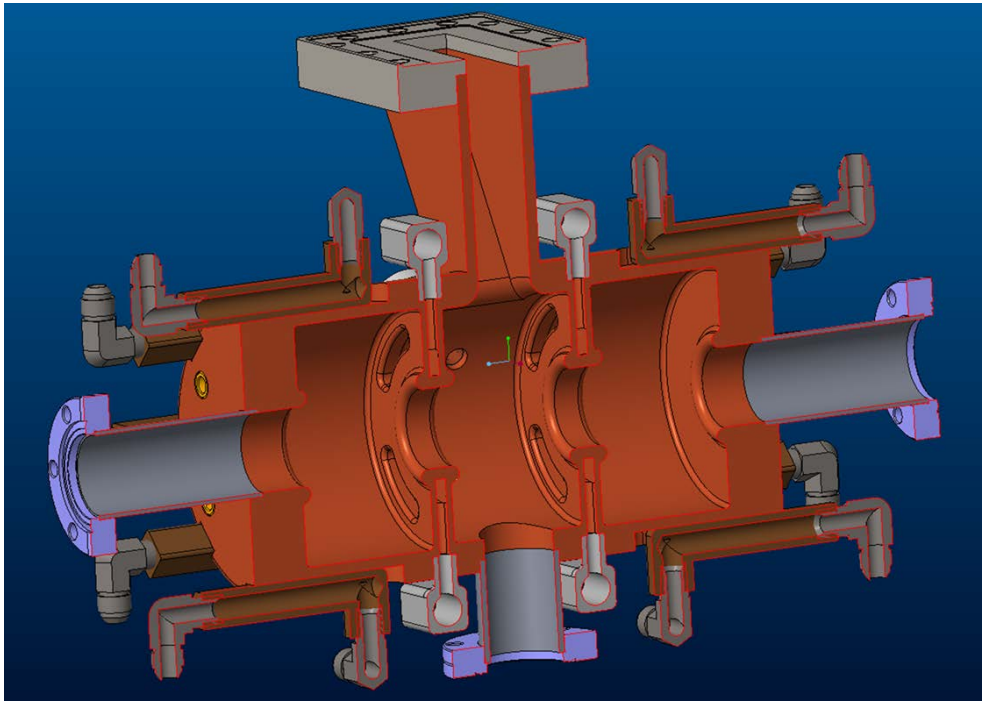

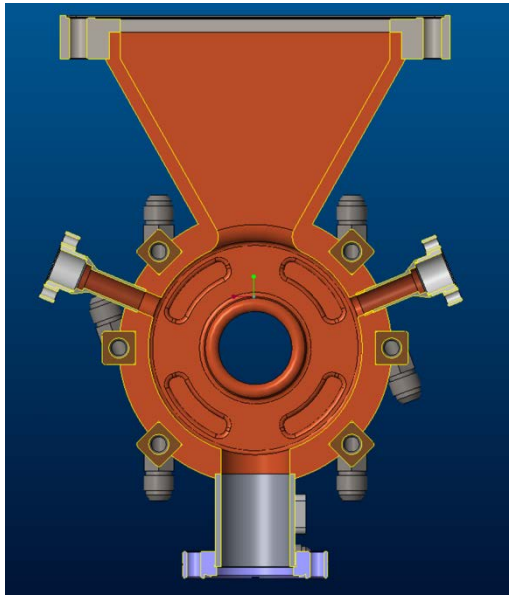

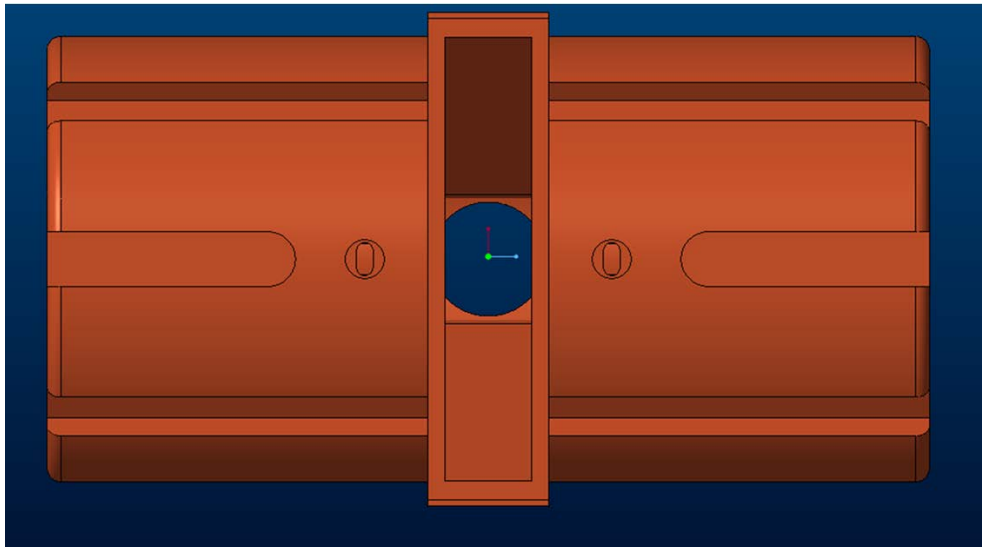

Thanks

- Silvia Verdu Andres
- Binping Xiao
- Chen Pai
- Steve Bellavia
- Chris Cullen
- Andrew Lambert (Berkley National Lab)
- Tom Schultheiss (AES)