ELECTROMAGNETIC, THERMAL, AND STRUCTURAL ANALYSIS OF RF CAVITIES USING ANSYS

2.1 GHz 3-Cell Cavity

Cliff Brutus

6/15/15

Job Name: 2.1ghz_Symmetry_4-25-15

Overall Layout

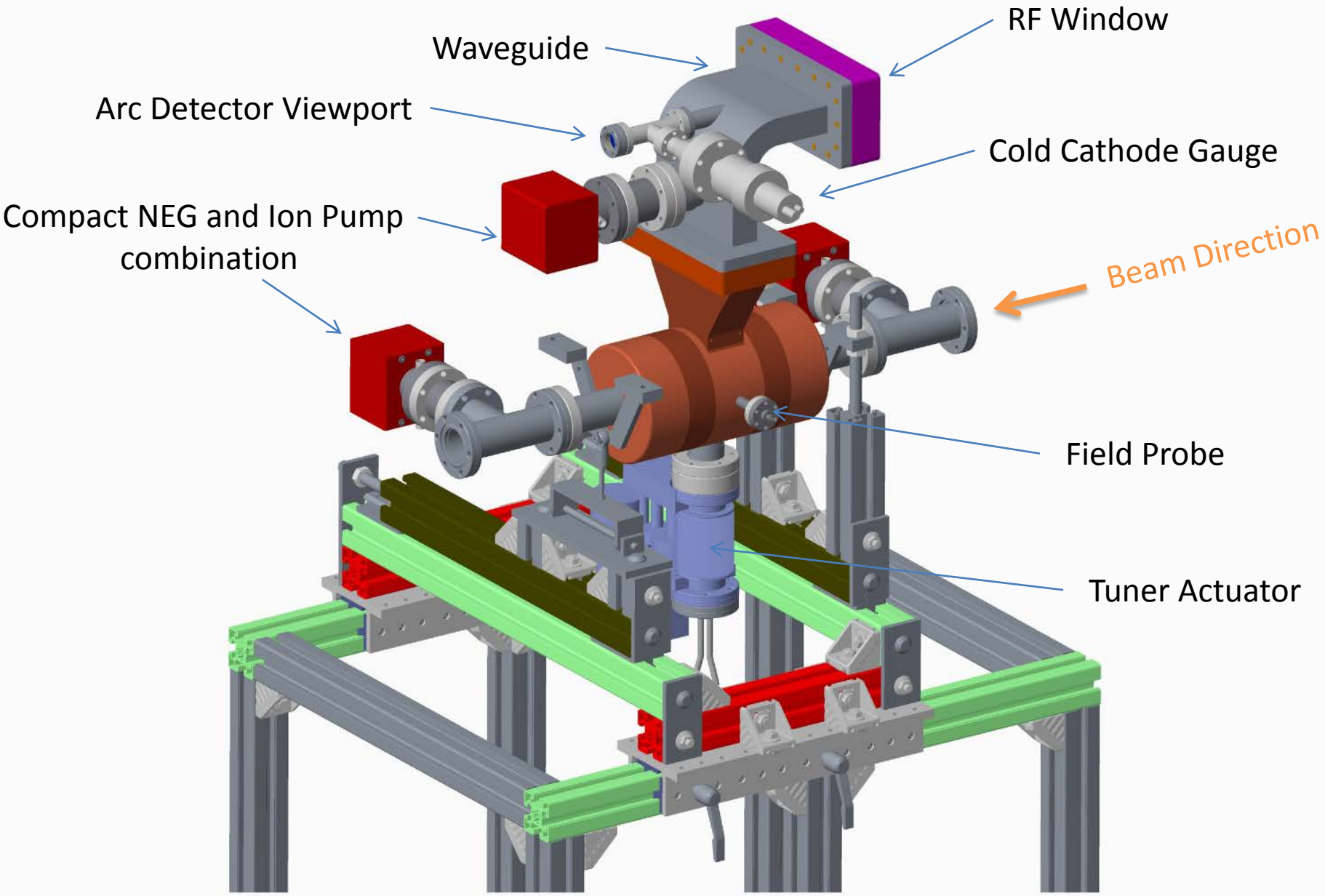

Overall Layout

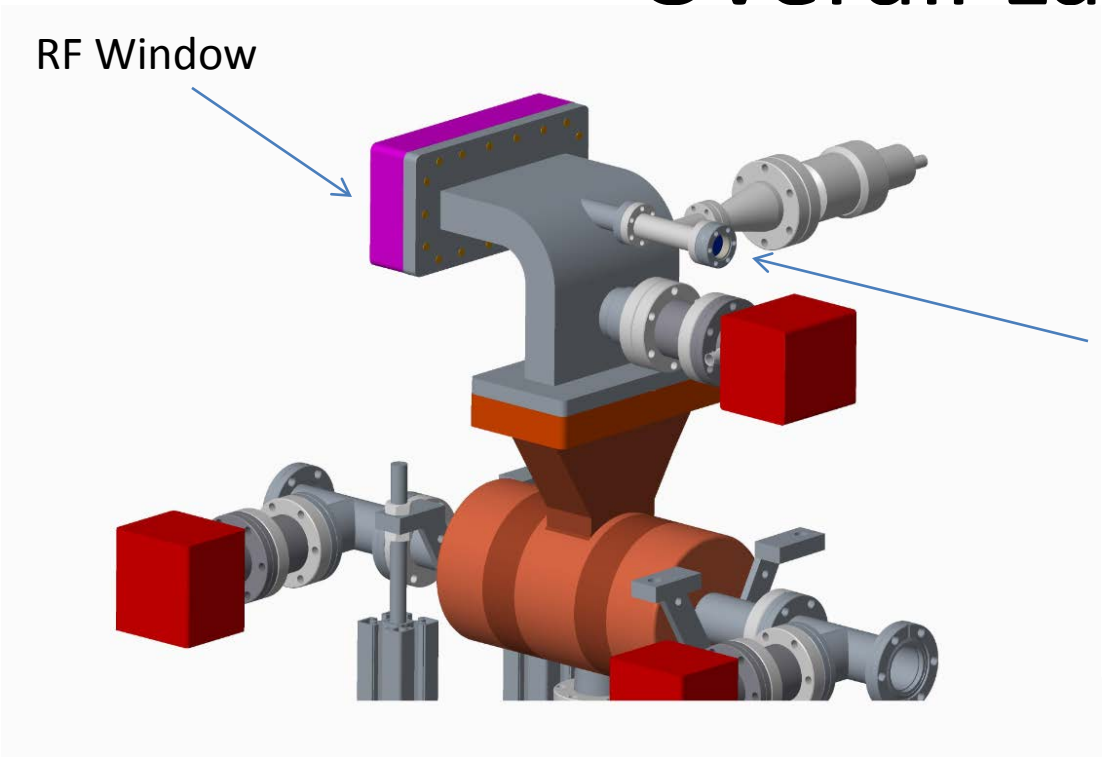

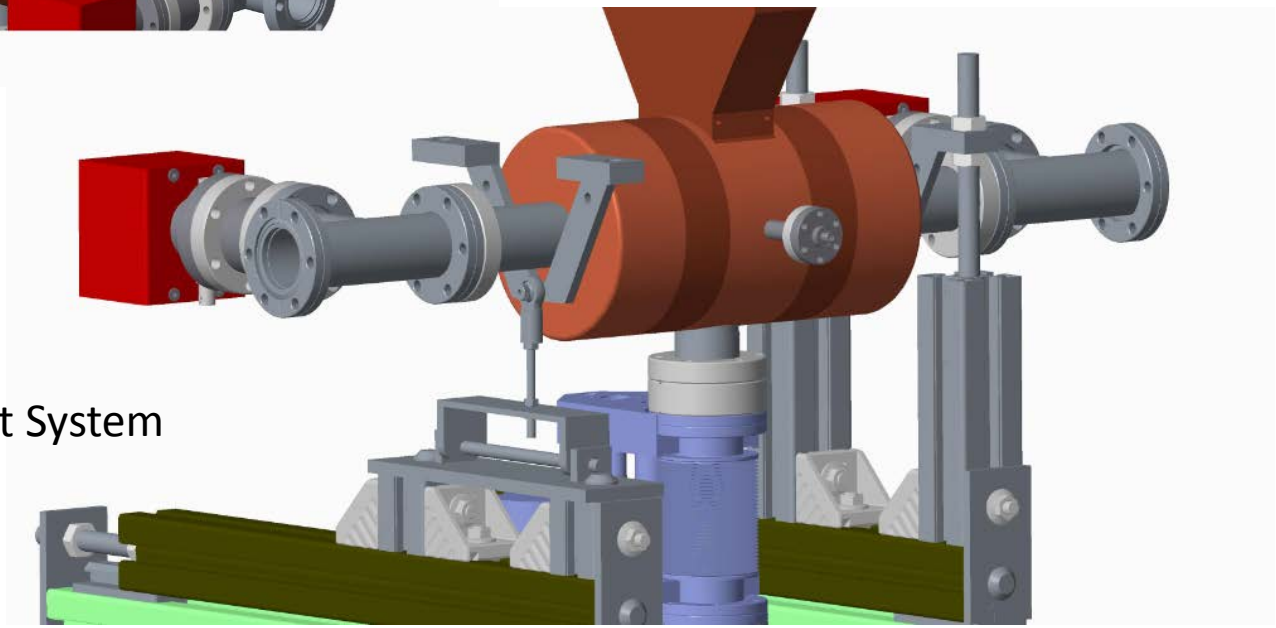

Conceptual Cavity Support System

Overall Layout

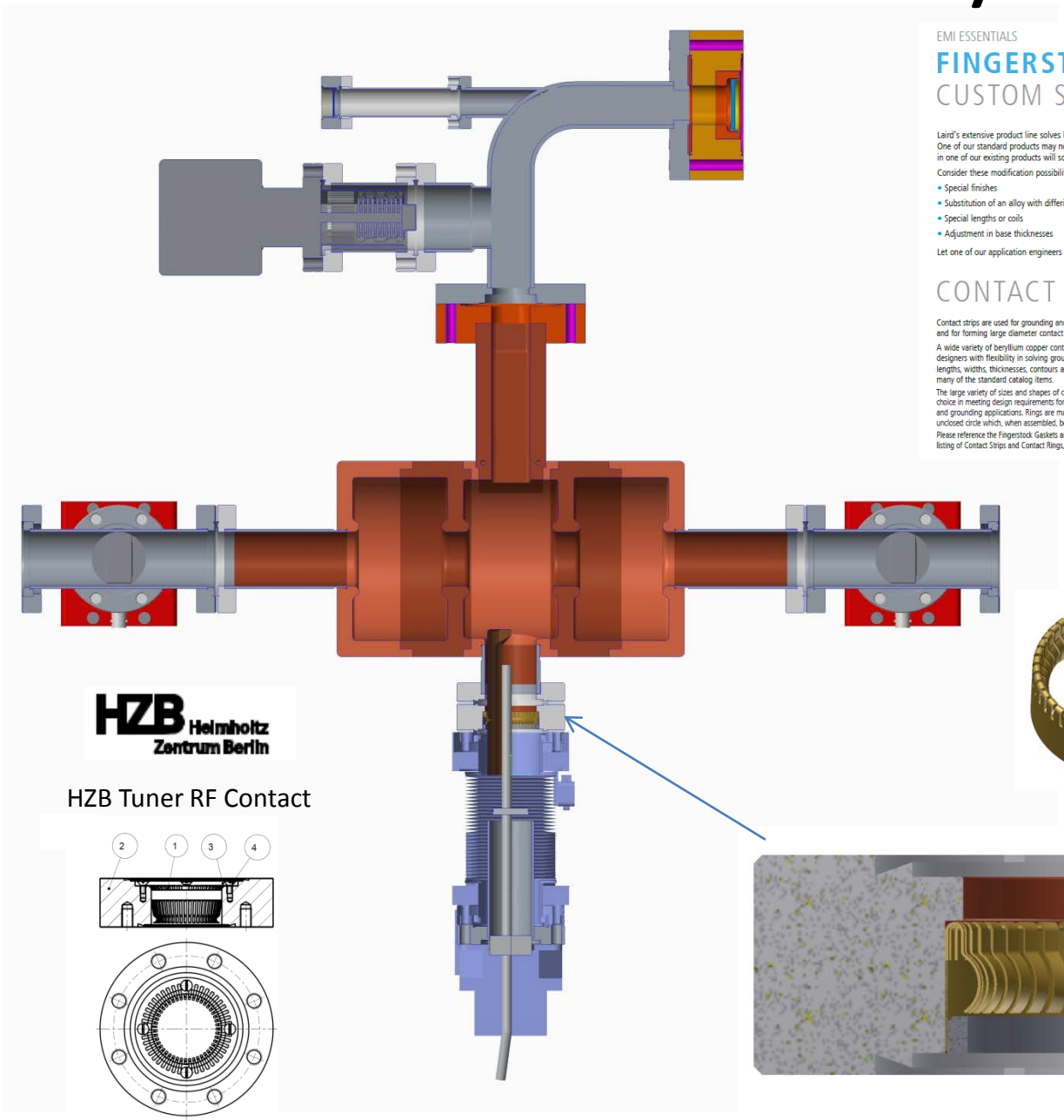

Laird
Smart Technology. Delivered.

EMI ESSENTIALS

FINGERSTOCK
CUSTOM STAMPING

Laird's extensive product line solves hundreds of EMC problems. But each customer problem is unique. One of our standard products may not precisely meet your needs. Often a modest modification in one of our existing products will solve your problem quickly, effectively and economically.

Consider these modification possibilities:

- Special finishes
- Substitution of an alloy with differing properties
- Special lengths or coils
- Adjustment in base thicknesses
- Addition of bends, slots, holes
- Changes in width of mounting surfaces
- Removal of fingers

Let one of our application engineers show you a full range of modified standard possibilities.

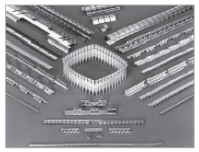

CONTACT STRIPS / CONTACT RINGS

Contact strips are used for grounding and shielding in high-frequency equipment and for forming large diameter contact rings.

A wide variety of beryllium copper contact strips provides engineers and designers with flexibility in solving grounding and shielding problems. Various lengths, widths, thicknesses, contours and hole locations are possible for many of the standard catalog items.

The large variety of sizes and shapes of contact rings offers engineers a wide choice in meeting design requirements for microwave cavities, tuning, shielding and grounding applications. Rings are made from strip stock formed into an unclosed circle which, when assembled, becomes a complete ring.

Please reference the Fingerstock Gaskets and Metal Grounding Catalog for a complete listing of Contact Strips and Contact Rings, including part numbers and dimensions.

FEMALE RINGS

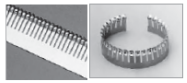

MALE RINGS

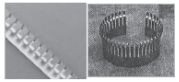

RF Contact

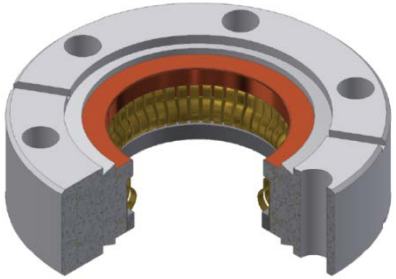

HZB Helmholtz Zentrum Berlin

HZB Tuner RF Contact

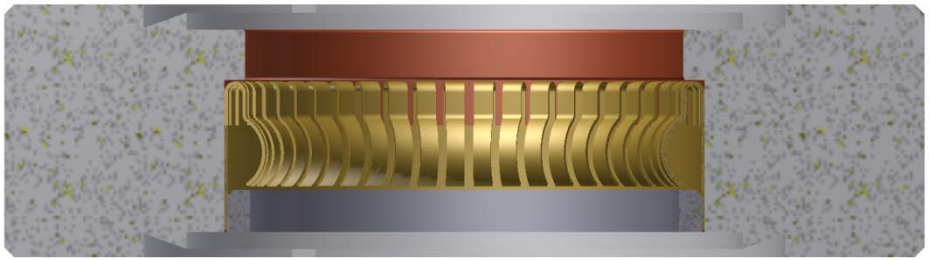

Copper Braze Joints

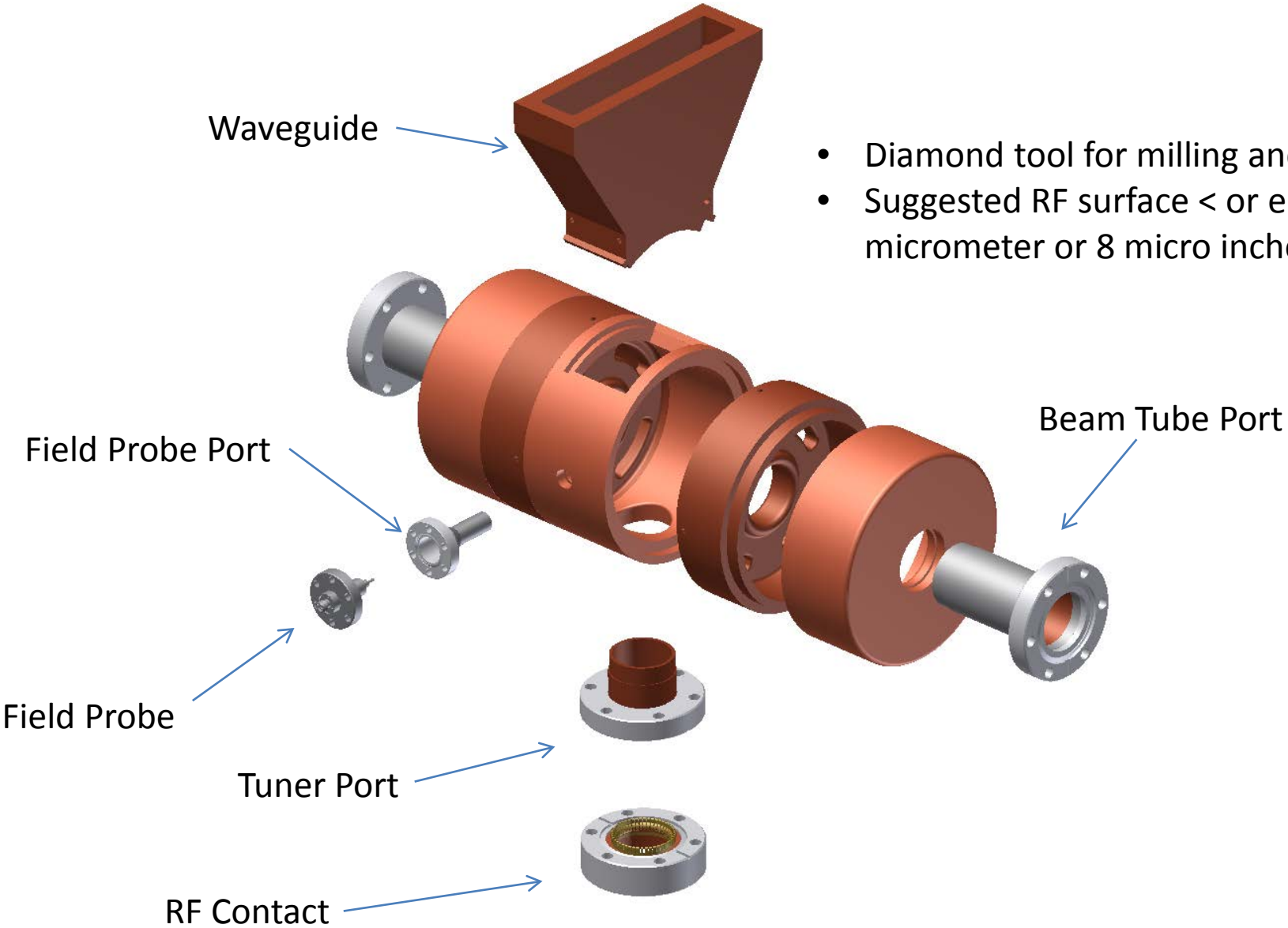

- Diamond tool for milling and turning
- Suggested RF surface < or equal to 0.2 micrometer or 8 micro inches

RF, Thermal and Structural Simulation

CAD Model

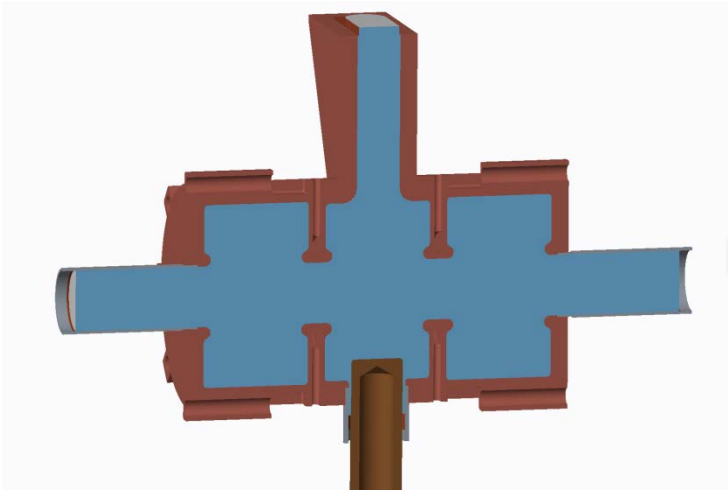

RF Analysis

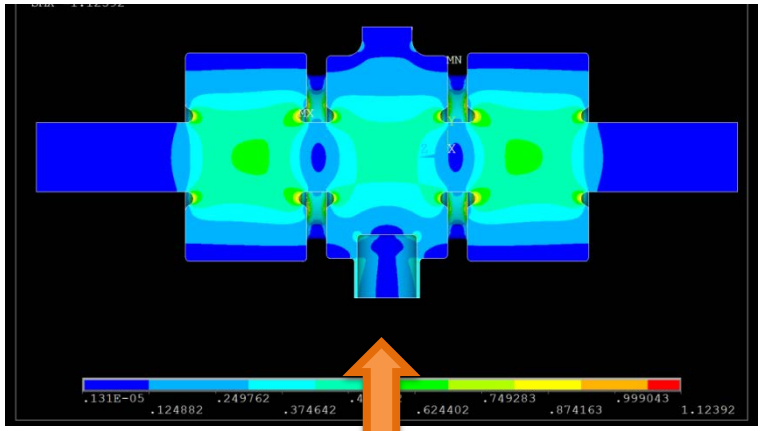

Thermal Analysis

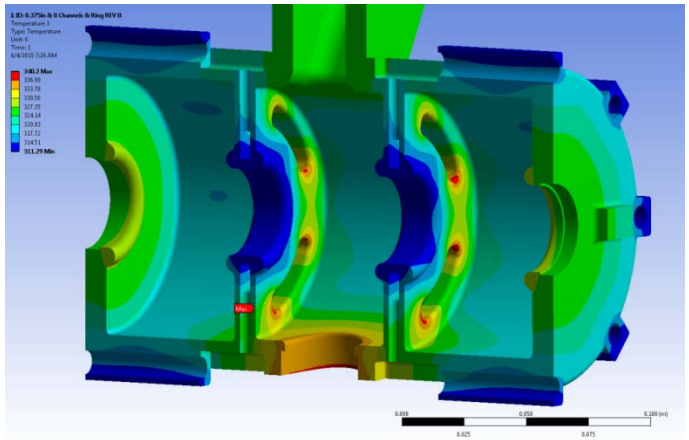

Structural Analysis

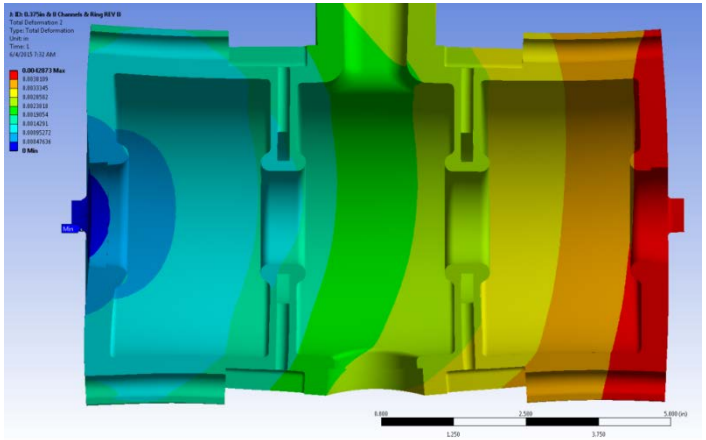

RF Analysis

Full Model

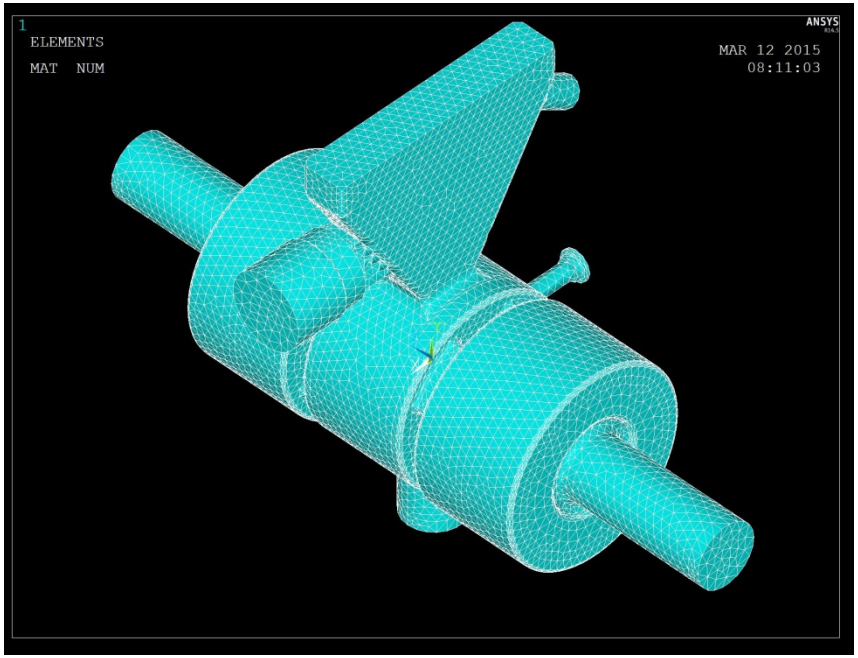

Symmetry

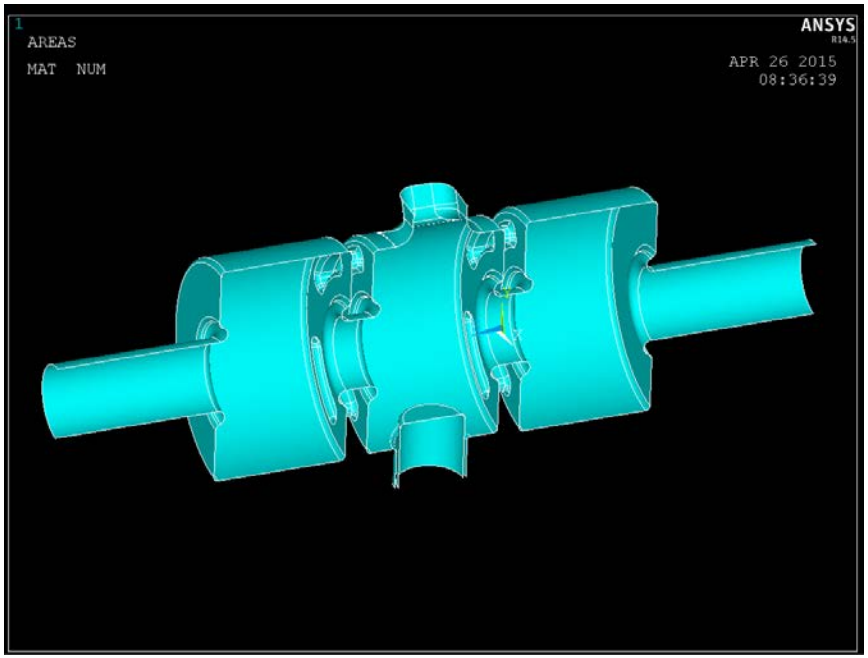

- **The cavity is not symmetric about its mid-plane since field probe port is on one side.**
- **Model is simplified by removing all the flanges, bolts and some ports that are not needed in the analysis**
- **Then the model is constructed to take advantage of the symmetry of the cavity about the beam axis**

RF Analysis

Frequency: 2114781678.364 Hz

6,423,586 Elements

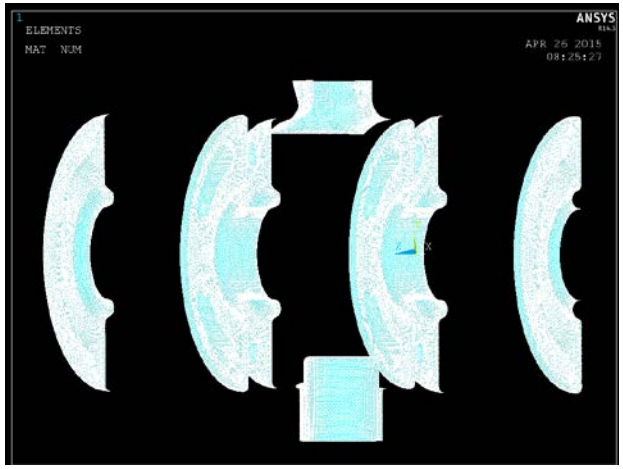

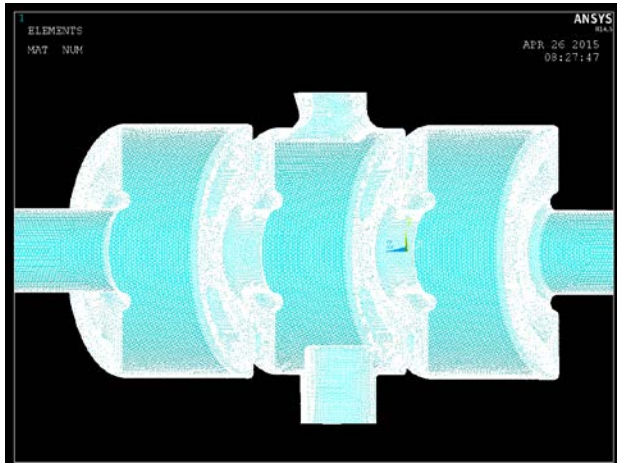

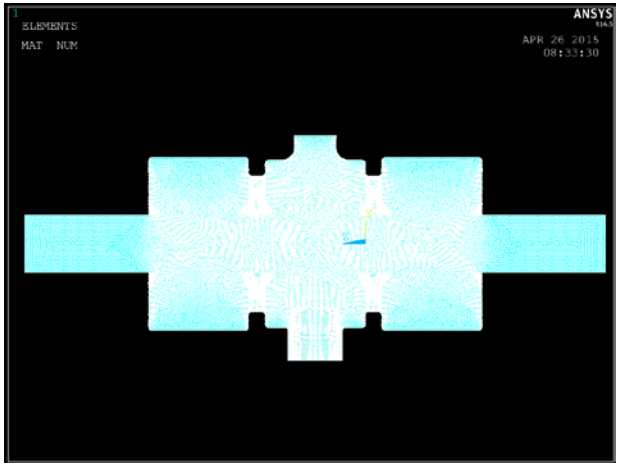

CRITICAL AREAS: 0.0008 m

BODY AREAS: 0.0015 m

VOLUME: 0.005 m

- **Regions near coupling slots, nose cones, waveguide and tuner are especially important for accurate frequency prediction**
  - ✓Mesh density enhanced 6x in this region
- **Maintains accuracy while keeping solution time convenient**

RF Analysis

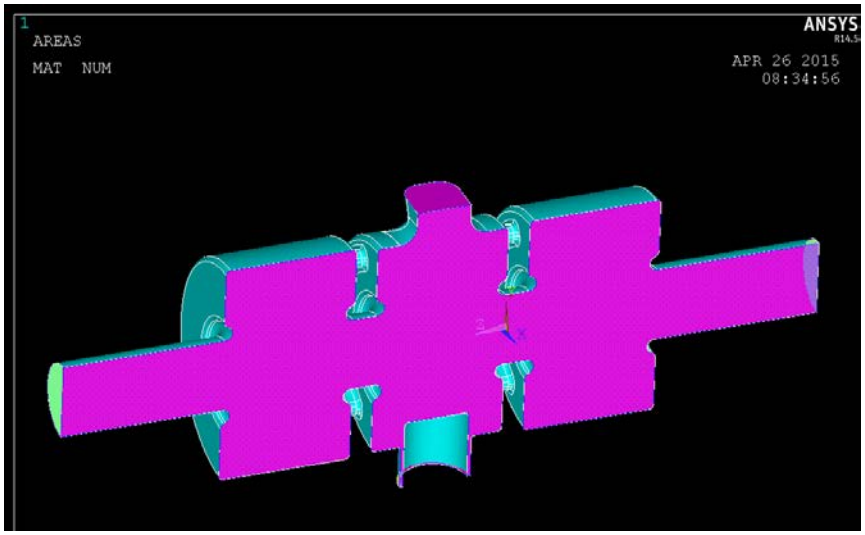

Unselected surfaces for BC

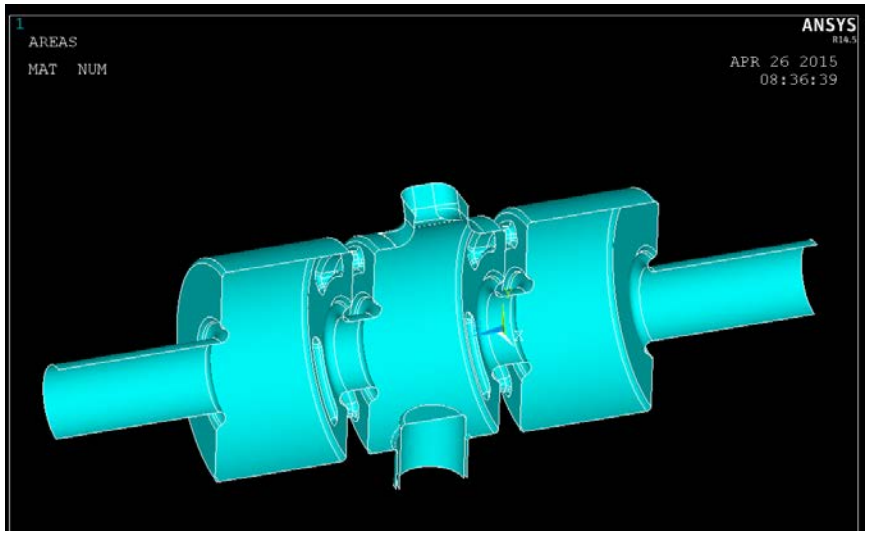

Electric Wall Areas

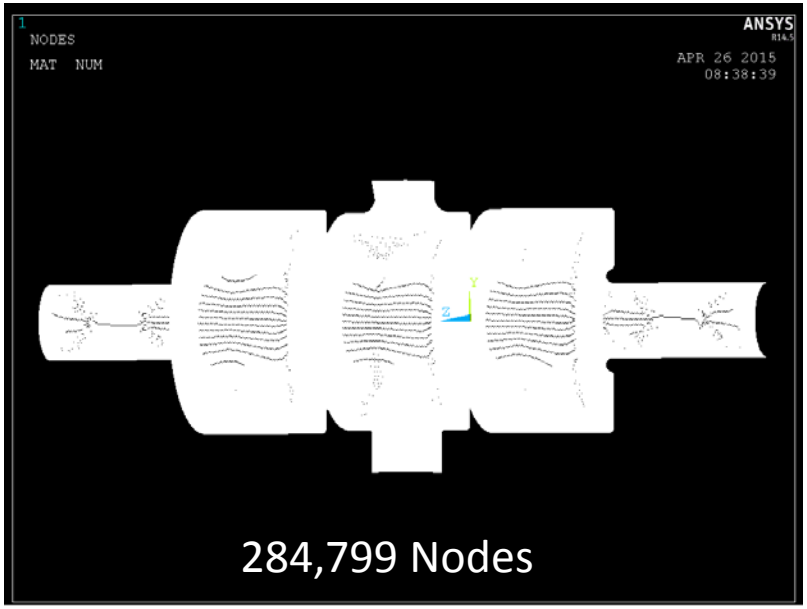

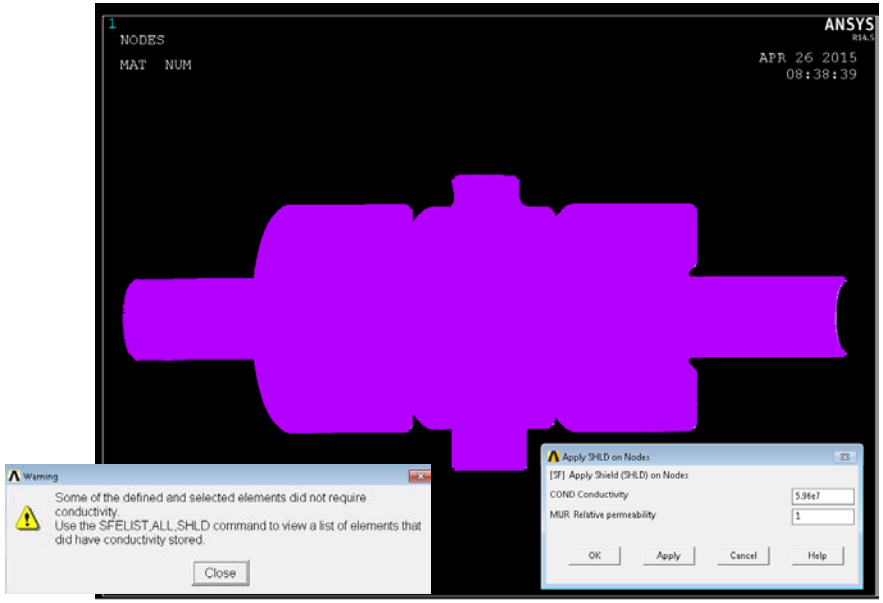

E-sum Nodal Solution

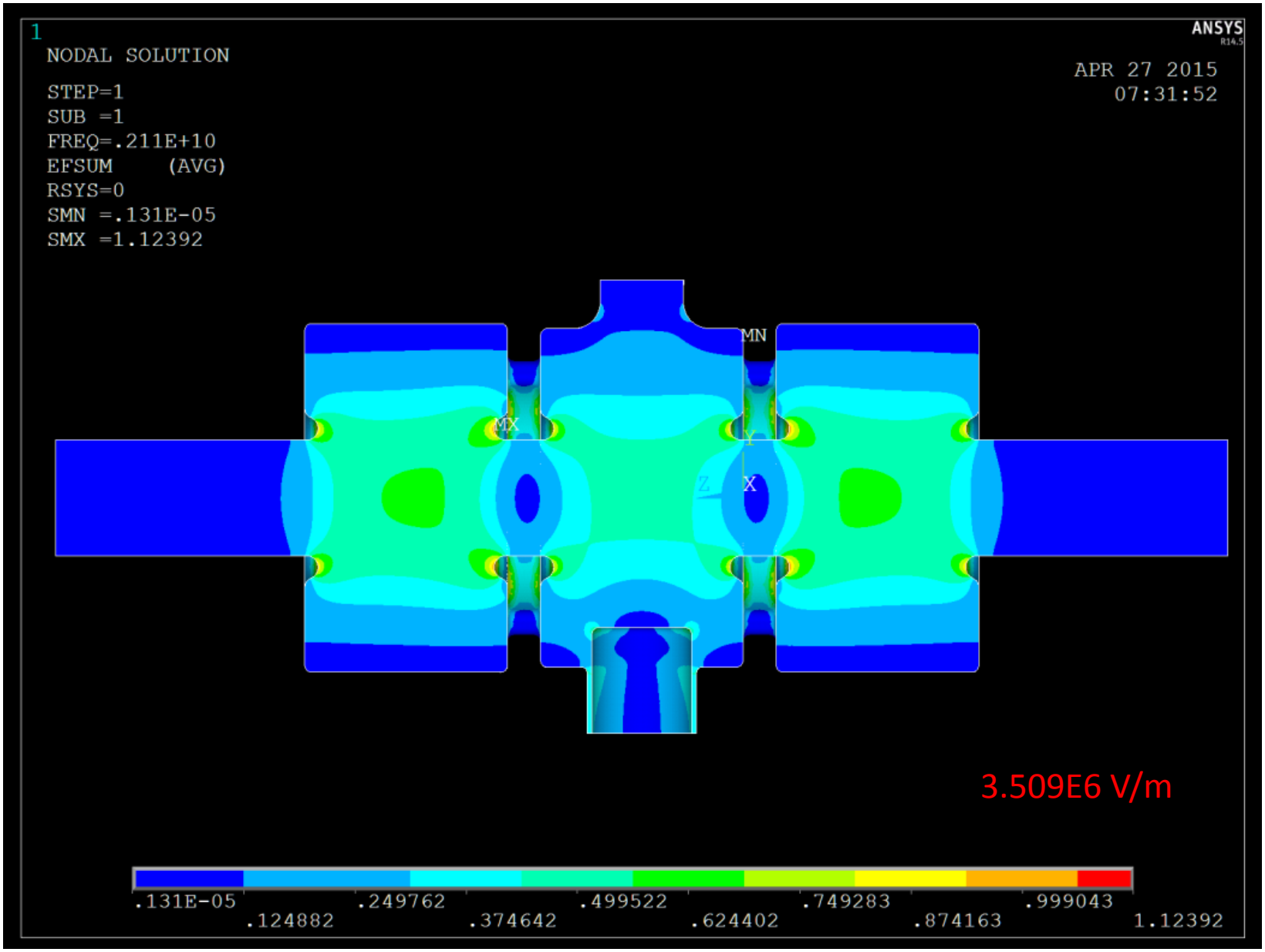

H-sum Nodal Solution

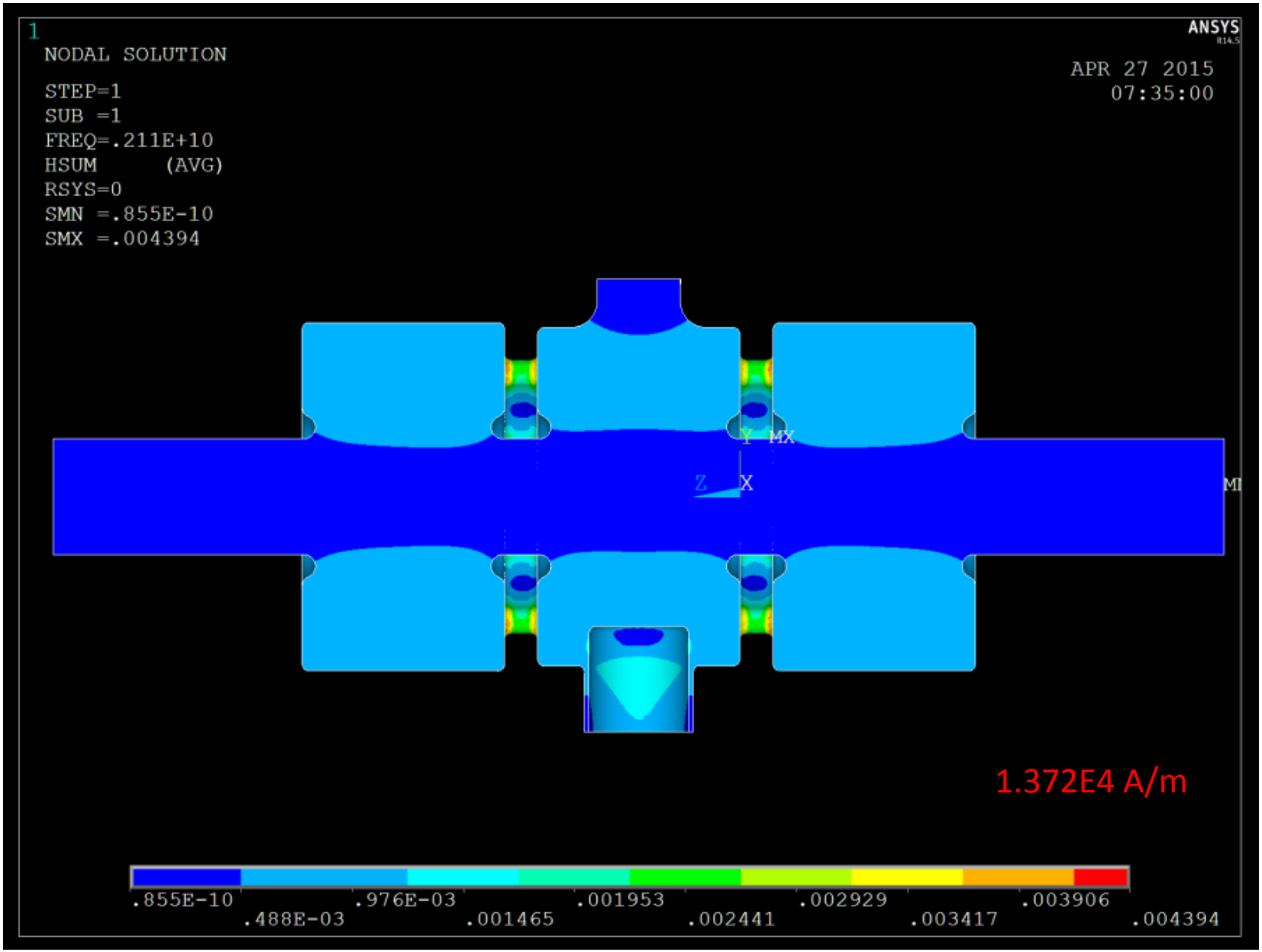

E-field along beam axis

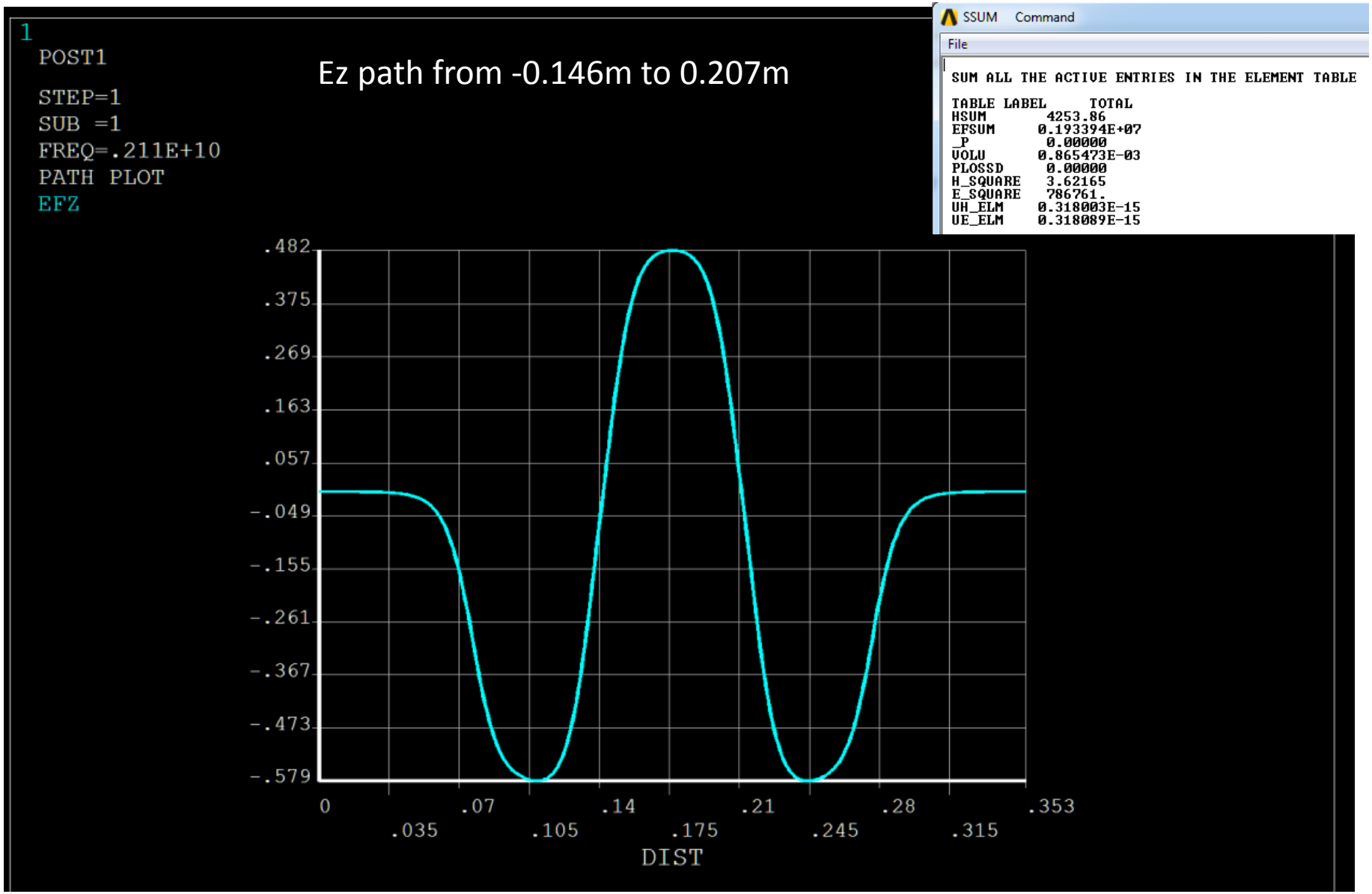

Thermal Analysis

- **Must determine scaling factor for power dissipation -> used the integral of the E-field along the beam axis also the stored energy as a comparison**

Scaling Factor = sqrt(U_{250k}/U_{ansys})
= 3902790.61

- **Thermal loads**
  - ✓Calculated heat flux on walls from RF solution (H-field) $HF = ½ * H^2 * R$
  - ✓Cooling channel convection

	[meter]	[meter]	[meter]			A/m^2	surface re	R =	0.01132		SF	3902790.61
NODE	X	Y	Z	HSUM	H Scaled	Heat Flux						
1	0	5.05E-02	-1.00E-02	9.99E-04	3.90E+03	8.60E+04						
2	0	-5.05E-02	-1.00E-02	1.00E-03	3.91E+03	8.64E+04						
4	-7.97E-04	5.05E-02	-1.00E-02	1.03E-03	4.03E+03	9.21E+04						
6	-1.59E-03	5.05E-02	-1.00E-02	1.01E-03	3.95E+03	8.82E+04						
8	-2.39E-03	5.04E-02	-1.00E-02	9.94E-04	3.88E+03	8.51E+04						
10	-3.19E-03	5.04E-02	-1.00E-02	1.00E-03	3.92E+03	8.70E+04						
12	-3.98E-03	5.03E-02	-1.00E-02	1.02E-03	3.99E+03	9.00E+04						
14	-4.78E-03	5.03E-02	-1.00E-02	1.03E-03	4.03E+03	9.18E+04						
16	-5.57E-03	5.02E-02	-1.00E-02	1.03E-03	4.01E+03	9.10E+04						
18	-6.36E-03	5.01E-02	-1.00E-02	1.06E-03	4.14E+03	9.69E+04						
20	-7.15E-03	5.00E-02	-1.00E-02	1.07E-03	4.18E+03	9.88E+04						
22	-7.94E-03	4.99E-02	-1.00E-02	1.04E-03	4.07E+03	9.38E+04						
24	-8.73E-03	4.97E-02	-1.00E-02	1.05E-03	4.08E+03	9.44E+04						
26	-9.51E-03	4.96E-02	-1.00E-02	1.04E-03	4.05E+03	9.28E+04						
28	-1.03E-02	4.94E-02	-1.00E-02	1.04E-03	4.06E+03	9.35E+04						
30	-1.11E-02	4.93E-02	-1.00E-02	1.06E-03	4.13E+03	9.67E+04						
32	-1.18E-02	4.91E-02	-1.00E-02	1.06E-03	4.14E+03	9.72E+04						

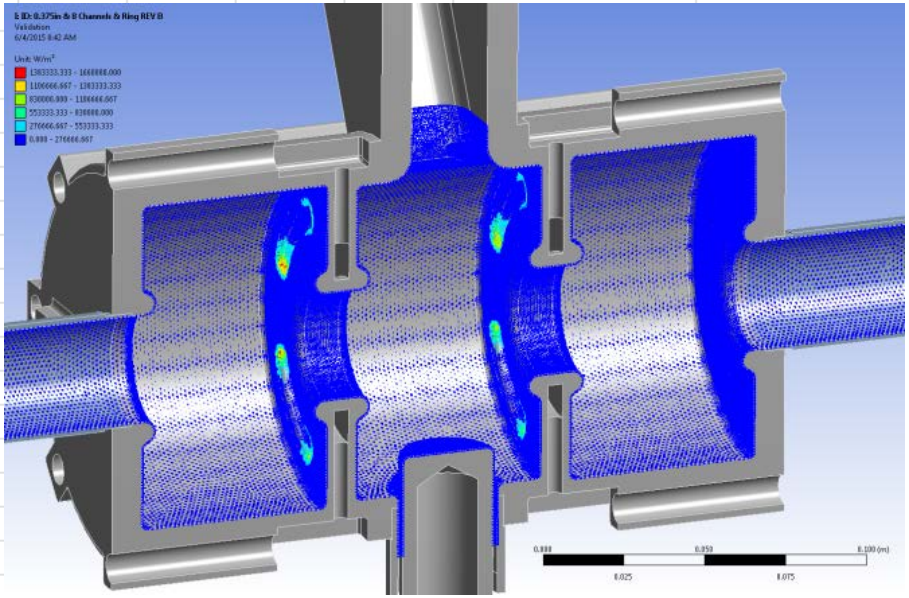

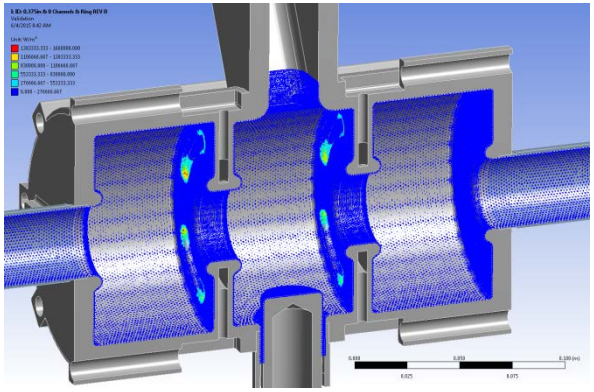

ANSYS	Freq.	2.1147816GHz
	U @ 250KV	0.0096875 J
	[illegible]	[illegible]
	[illegible]	[illegible]
	[illegible]	[illegible]
	Q factor	[illegible]

Est. Power Loss @ 200KV = 5927.630773 W

Est. Power Loss @ 250KV = 9261.923084 W

ANSYS APDL Total Est. Power Loss including Tuner	9261.92	W
ANSYS Workbench Total Est. Power Loss including Tuner	9413.78	W
Est. Power Loss on cavity surface	8728.58	W
Est. Power Loss on tuner	685.2	W
Est. Power Loss on window	TBD	W

>> For the window, Binping has not finish the design to move the window further away from the cavity.

Workbench reaction:
- 4706.89 W for ½ model

Scaling Factor = sqrt(U_{250k}/U_{ansys})
= 3902790.61

-342.6 W

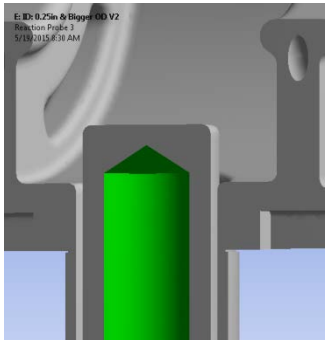

-2867.7 W

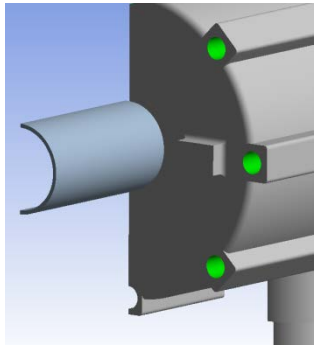

-166.83 W

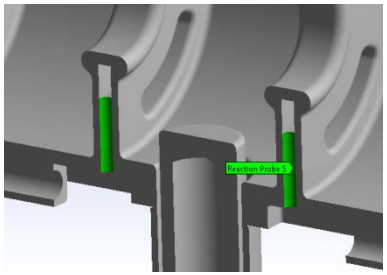

-202.36 W

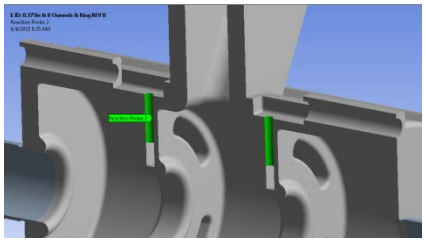

-1127.4 W

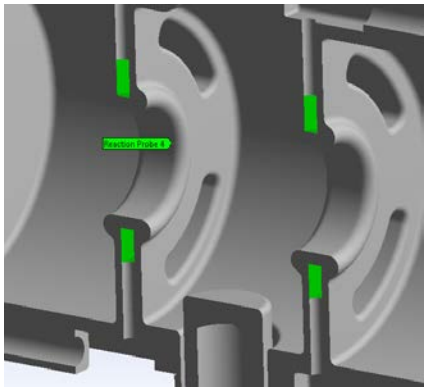

2.856 GHz ELI-project

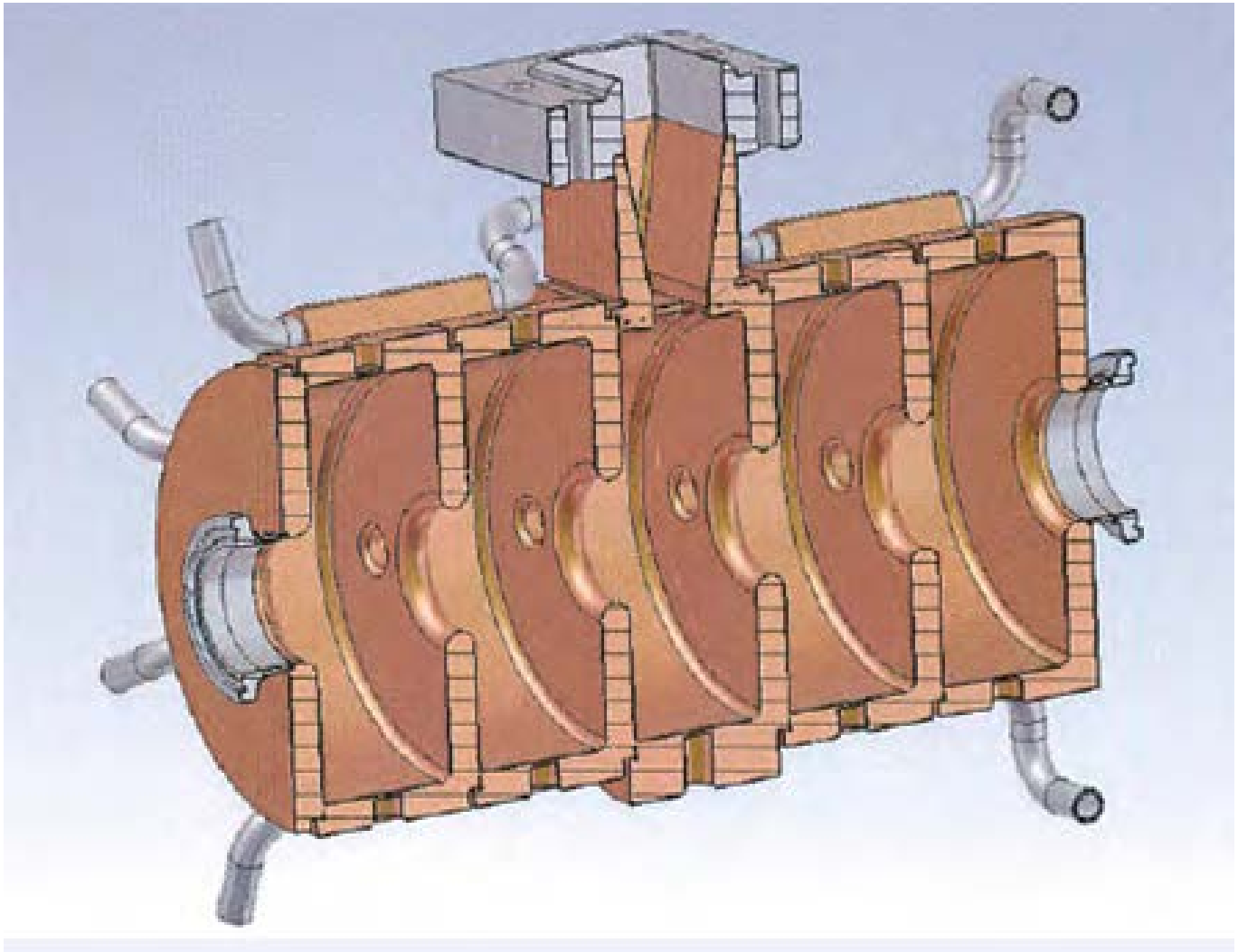

Manufacturer: RI

Nose Cone and Coupling Slots Cooling

- Numerous engineering analyses carried for design validation

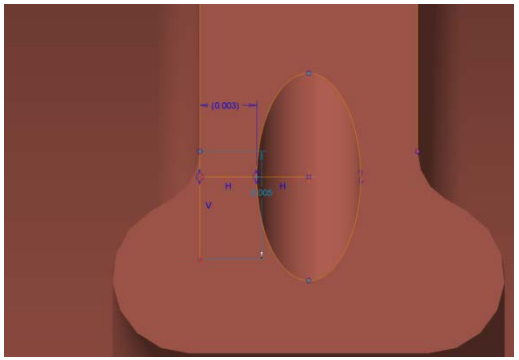

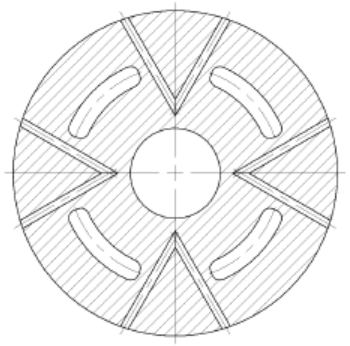

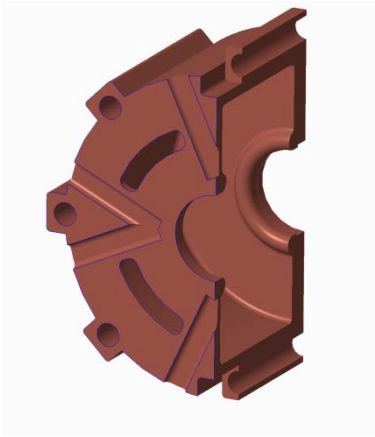

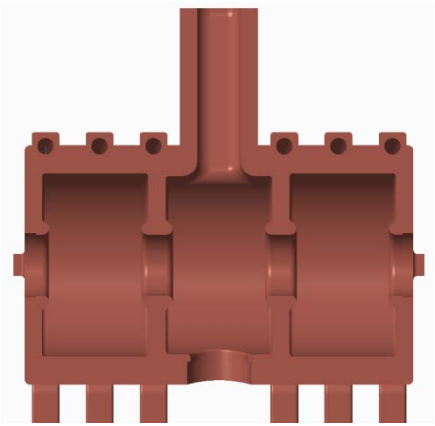

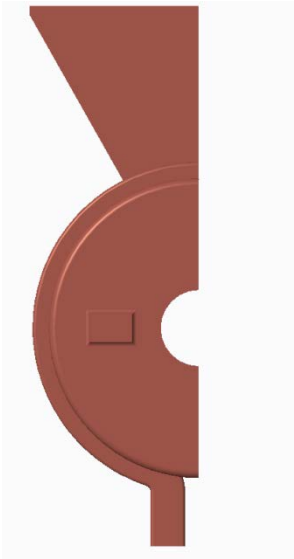

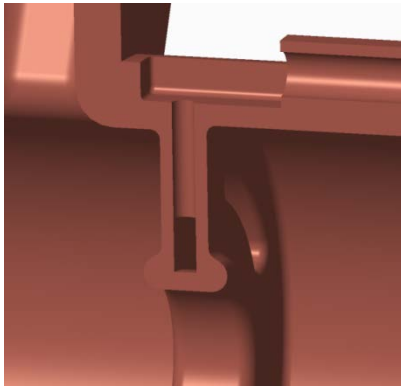

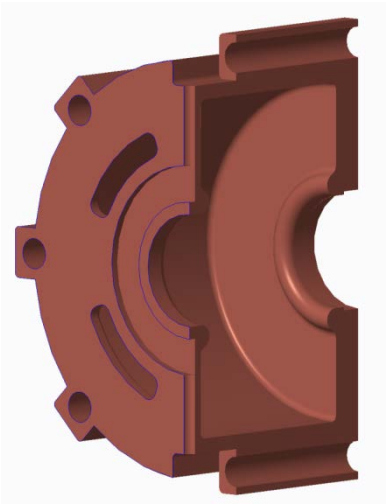

Nose Cone and Coupling Slots Cooling

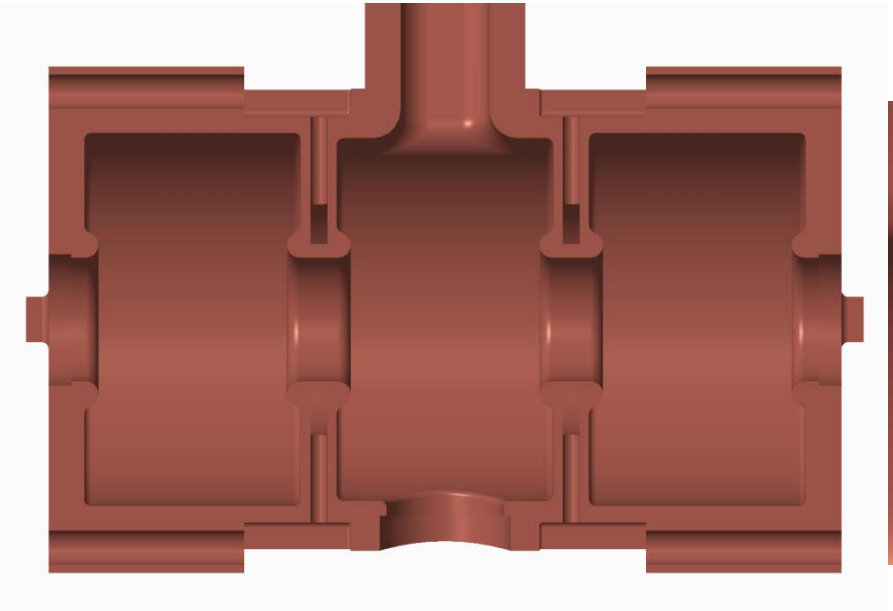

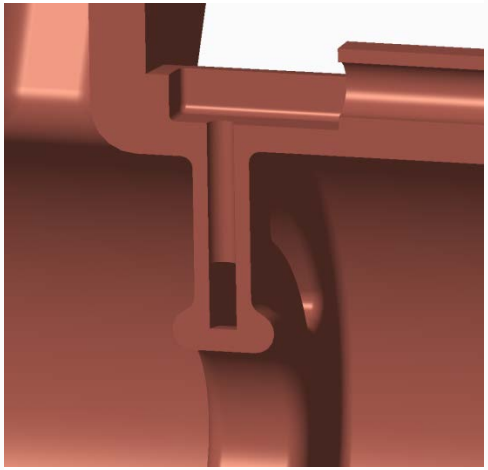

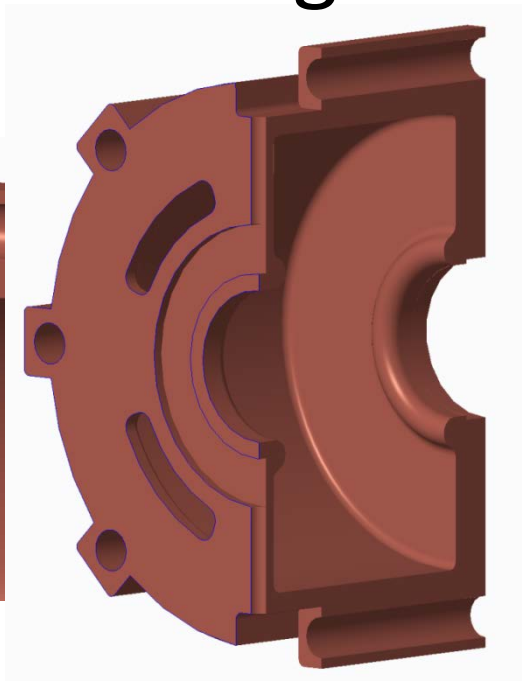

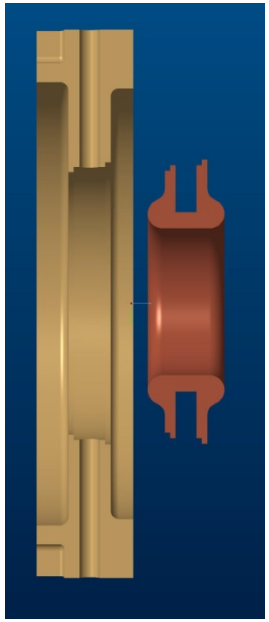

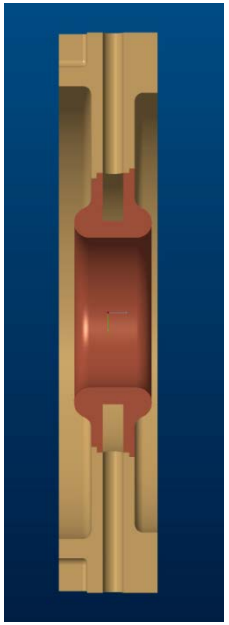

Table 1 - Maximum Recommended Water Velocities for Specific Materials

Water	
Low carbon steel	10 ft/sec
Stainless steel	15 ft/sec
Aluminum	6 ft/sec
Copper	8 ft/sec
90-10 Cupronickel	10 ft/sec
70-30 Cupronickel	15 ft/sec

Thermal Simulation

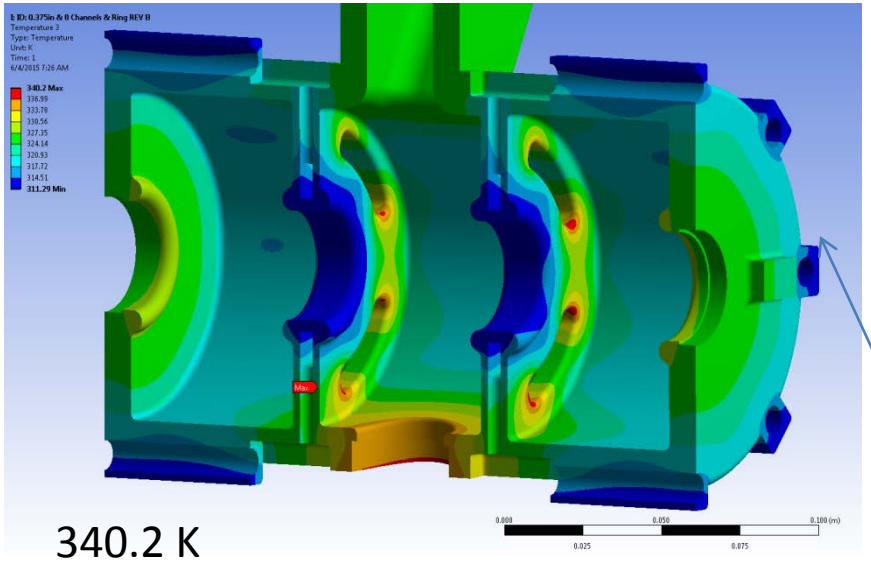

340.2 K

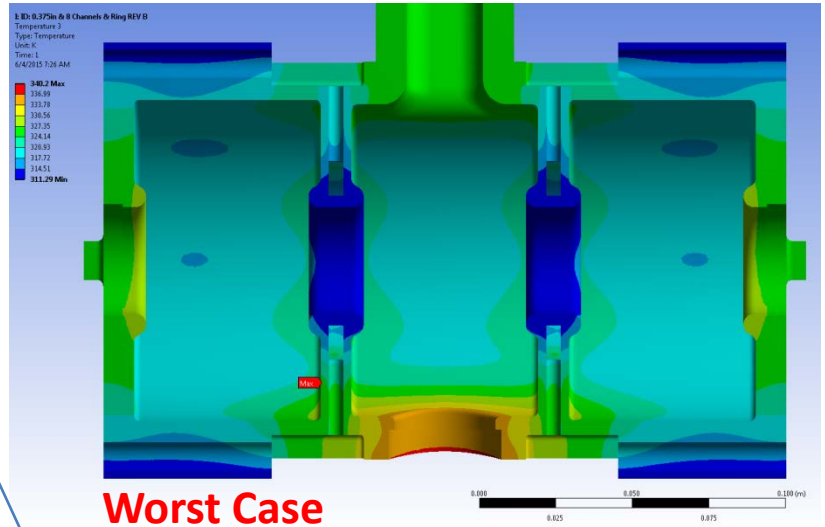

Worst Case

Water Ambient Temperature : 305.15 K

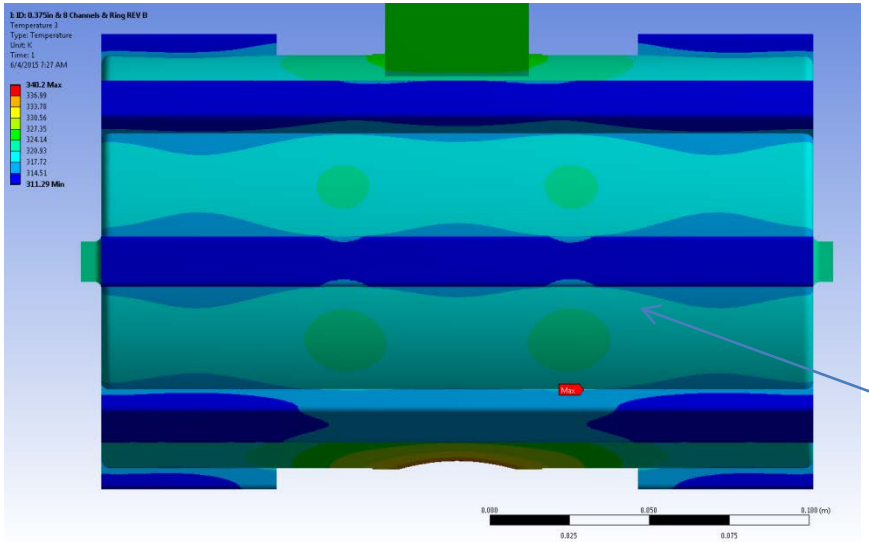

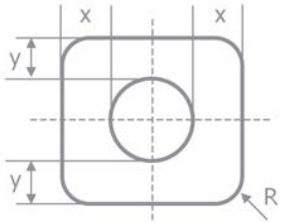

8494

OD	ID	x = y	R	
15.88	9.52	3.18	1.5	mm
0.625195	0.374802019	0.125196	0.059055	in
Flow		3		GPM
h			12131	W/m^2-K
Velocity			8.71	Ft/sec

h =	24262	W/m^2-K
ID=	.1875	in
Flow	1.5	GPM
Velocity	17.43	Ft/sc

h =	13153	W/m^2-K
Dh=	.2634	in
Flow	1.5	GPM
Velocity	8.83	Ft/sc

Structural Simulation

Fix Support

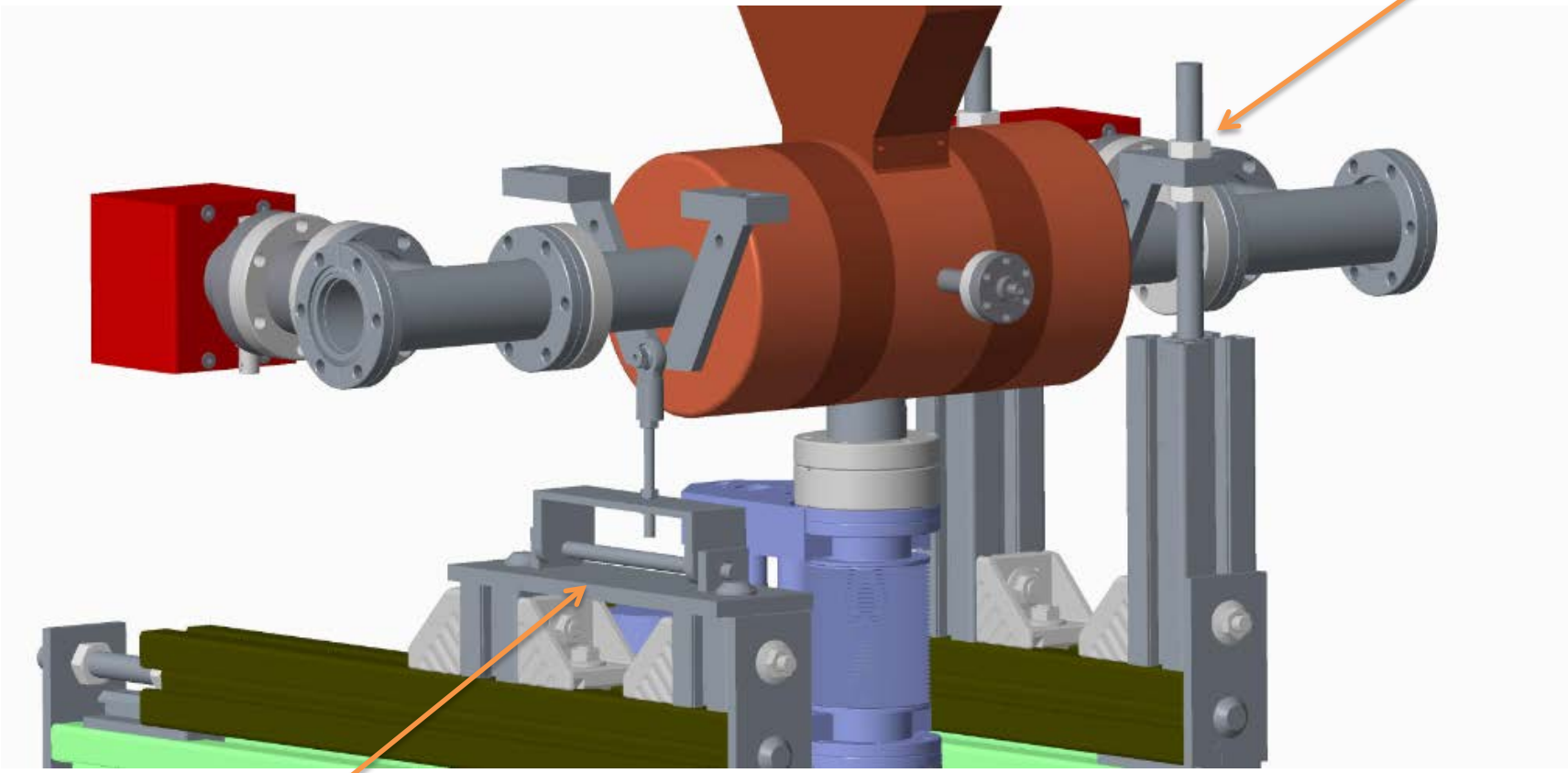

Sliding and Rotating Support

Structural Simulation

Without vacuum & displacement on one end

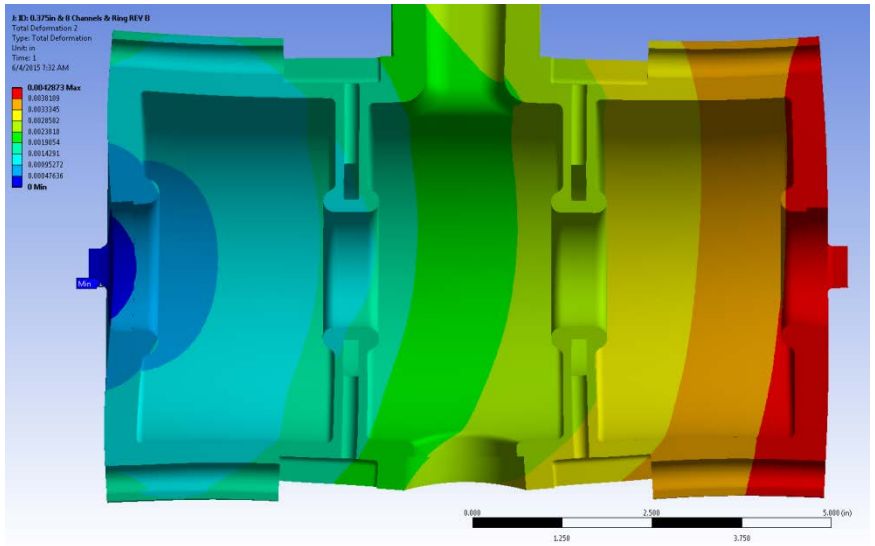

Axial thermal expansion: 0.0043”

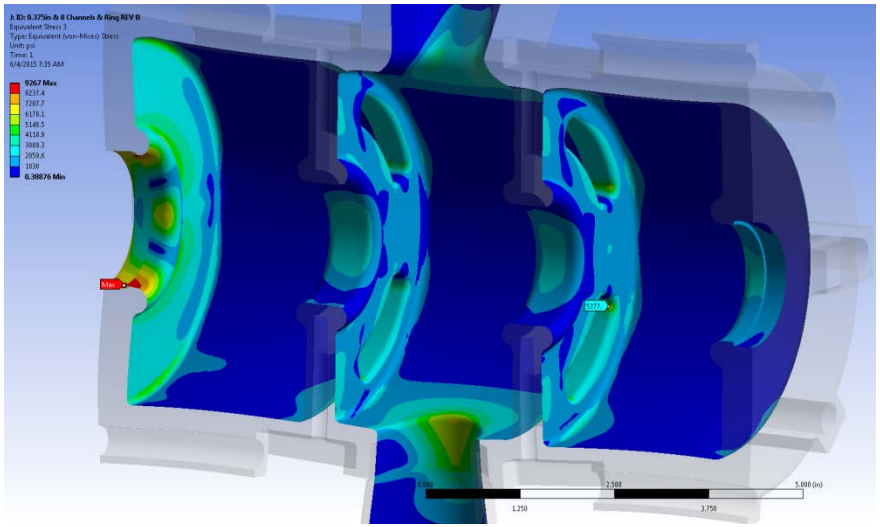

9267 psi

Coupling Slots Sizing: 0.0005m

Body sizing: 0.001m

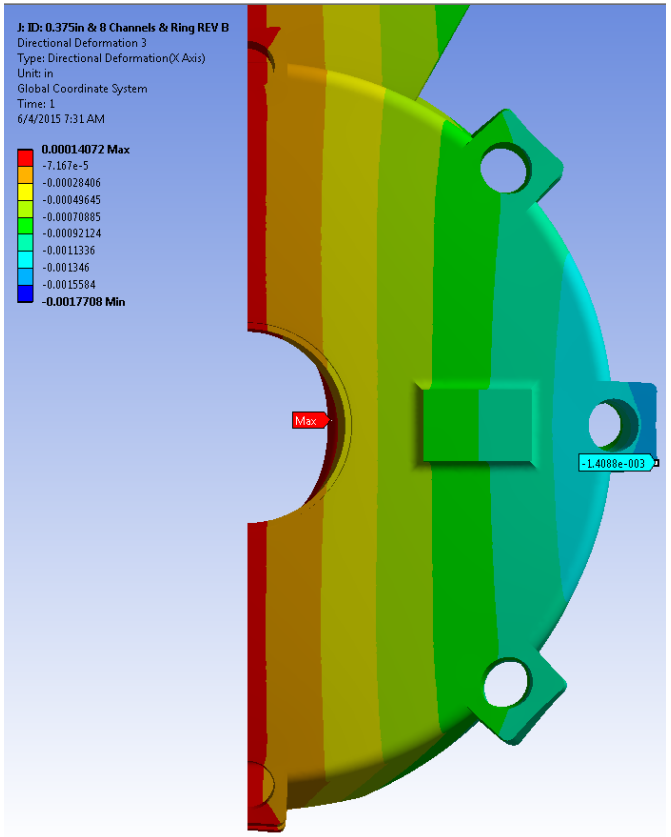

Radial thermal expansion: 0.0014”

Frequency Shift and Tuning

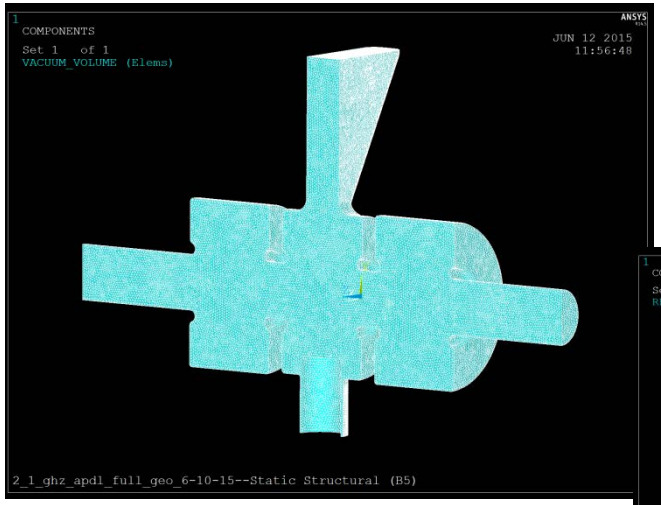

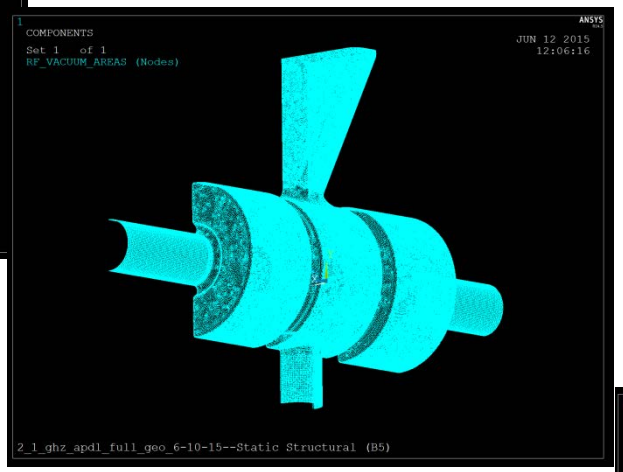

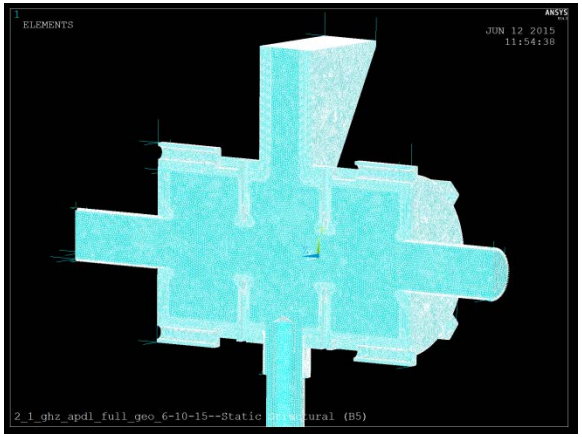

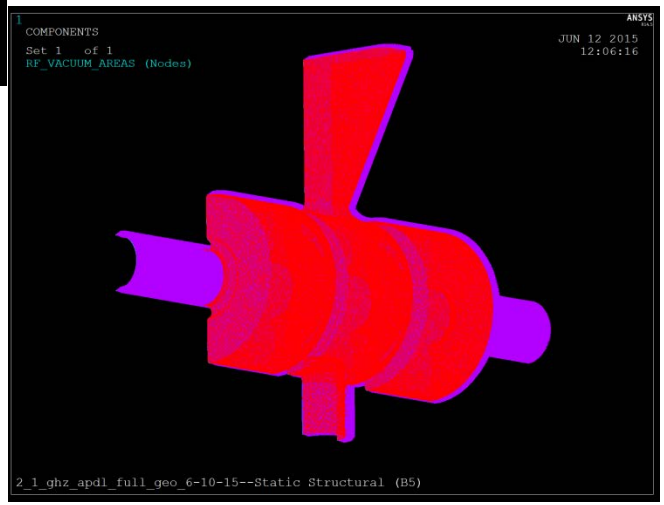

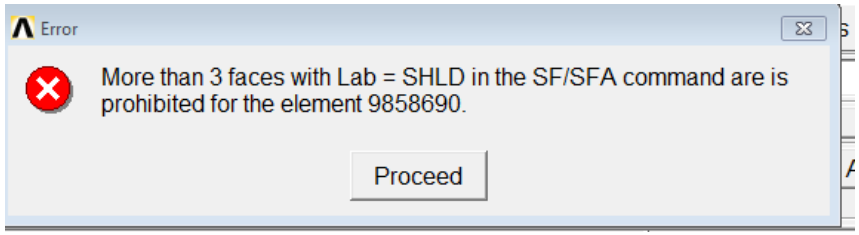

Water Cooled RF Window

DEVELOPMENT OF A 50 KW CW L-BAND RECTANGULAR WINDOW FOR JEFFERSON LAB FEL CRYOMODULE

Basic design of the window

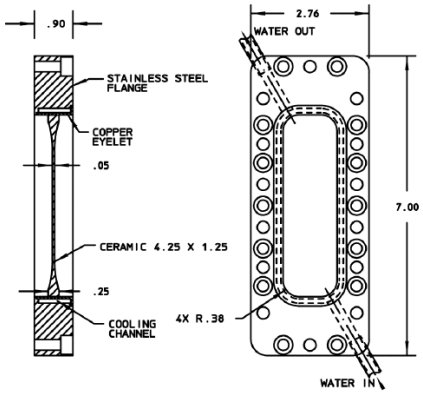

Main elements of the window

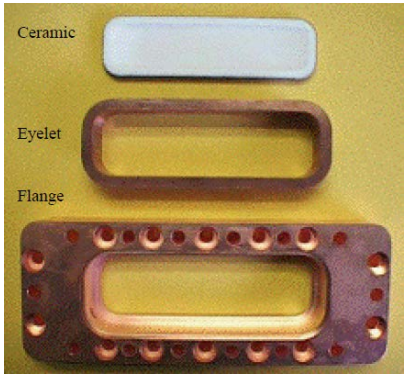

Completed window

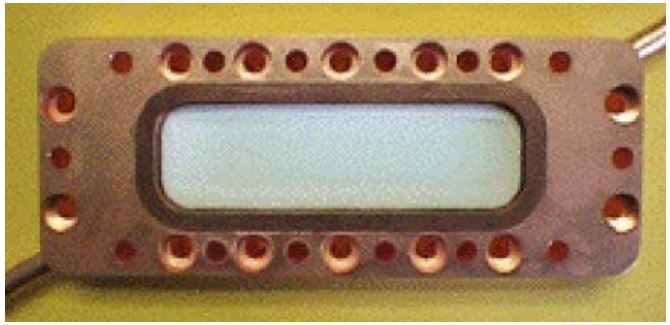

- The ceramic was ground from AL-995 material and metallized with a conventional tungsten-manganese process.
- The ceramic was first brazed to the copper eyelet using 50-50 coppergold alloy.
- This assembly is then brazed to the copper plated stainless steel flange using copper-silver eutectic alloy.
- After brazing and leak checking, the ceramic window is coated with 35 of chrome oxide on the vacuum side to prevent multipacting.

Current Progress

- Cavity engineering design nearly complete - finalize with input from design review and final RF simulation
- Thermal, RF and mechanical analyses are nearly complete

Additional Tasks

- Perform additional analyses
  - Tuner RF/heating analysis
  - Window and waveguide design
  - Frame design and support system
- Complete of overall layout of 2.1 GHz Cavity
- Generate drawings for RFP
- Write documents for RFP (SOW)

Thanks

- Silvia Verdu Andres
- Binping Xiao
- Chen Pai
- Steve Bellavia
- Chris Cullen
- Andrew Lambert (Berkley National Lab)
- Tom Schultheiss (AES)

Backup Slides

Nose Cone and Coupling Slots Cooling

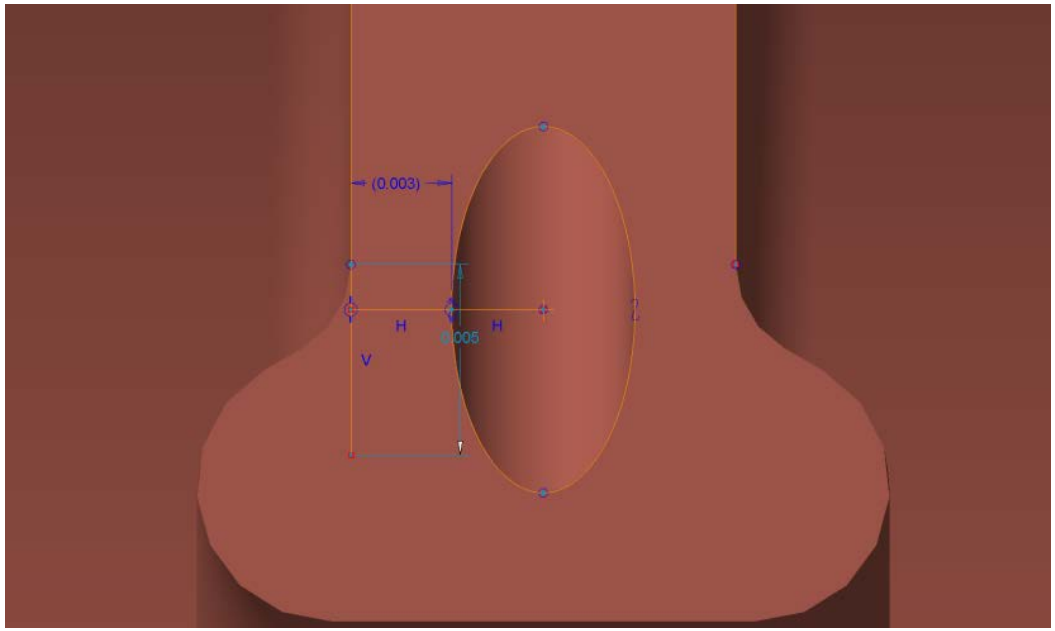

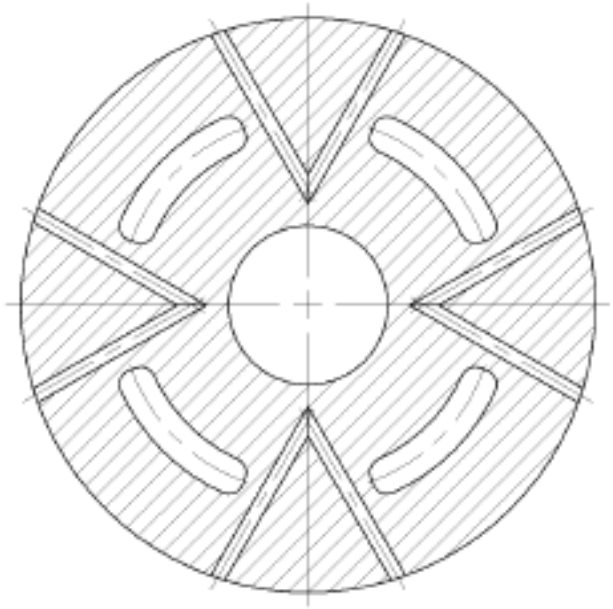

250 KV

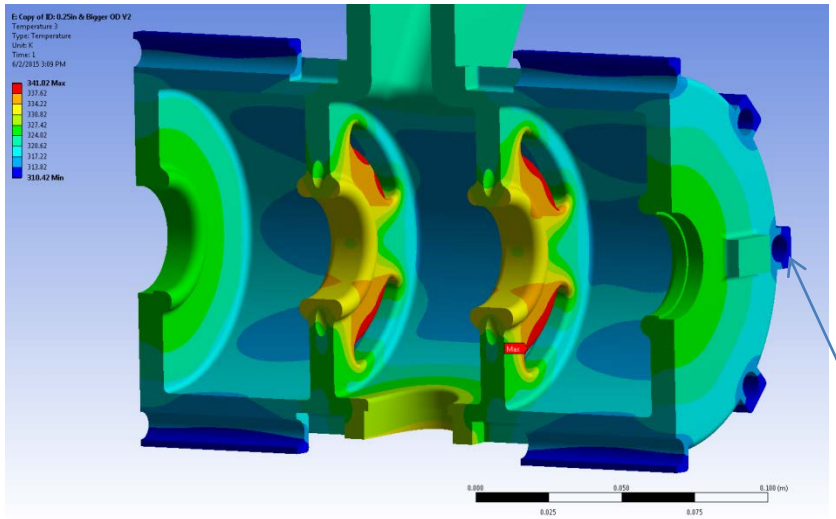

341.02 K

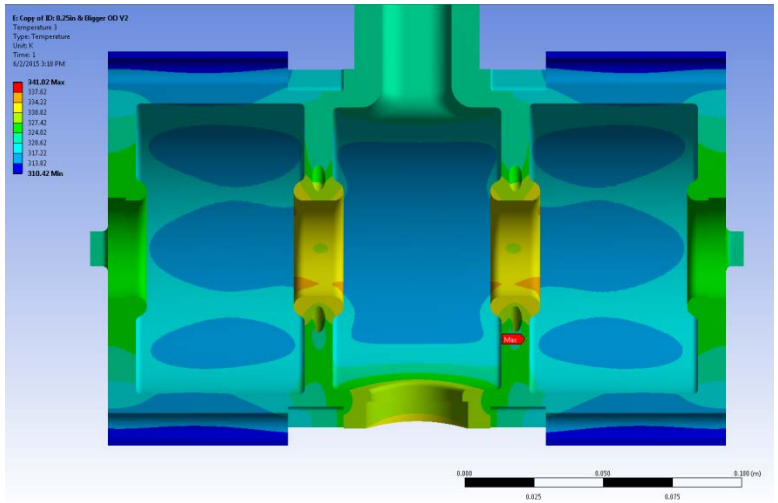

Worst Case

Water Ambient Temperature : 305.15 K

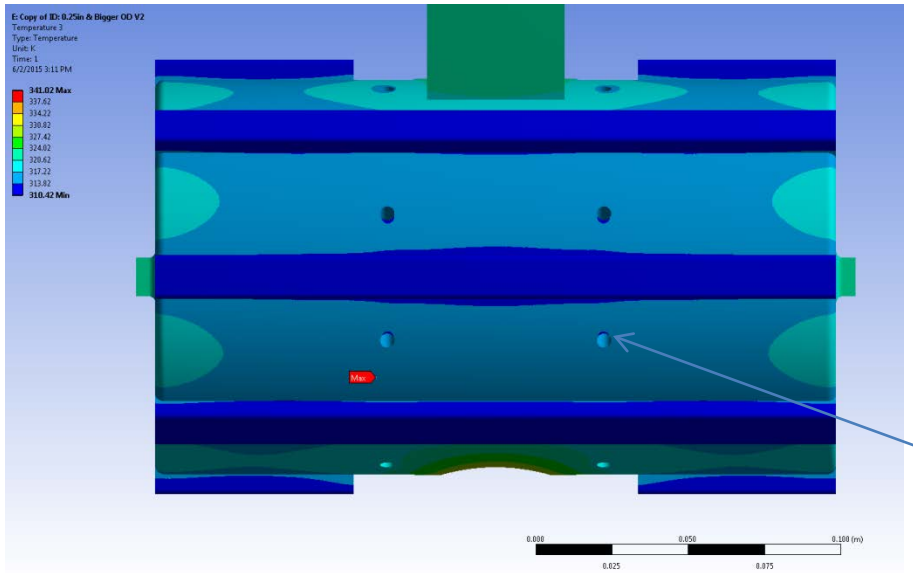

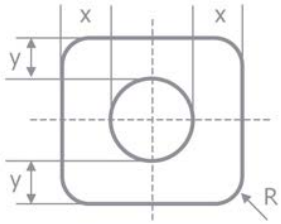

OD	ID	x = y	R	
14.22	9.53	2.35	1.59	mm
0.559841	0.375195719	0.092519	0.062598	in
Flow		3		GPM
h			12131	W/m^2-K
Velocity			8.71	Ft/sec

h =	24262	W/m^2-K
ID=	.1875	in
Flow	1.5	GPM
Velocity	17.43	Ft/sc

250 KV

Coupling Slots Sizing: 0.0005m

Without vacuum & displacement on one end

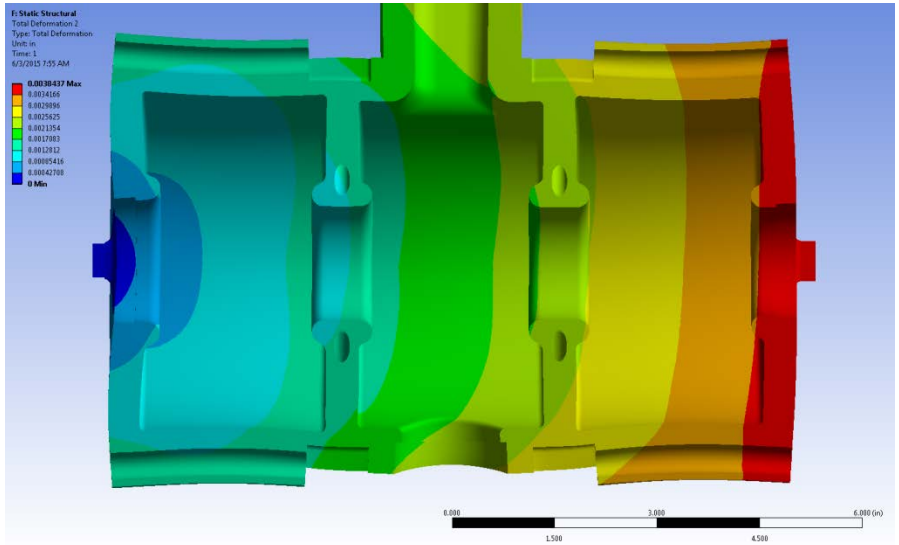

Axial thermal expansion: 0.0038”

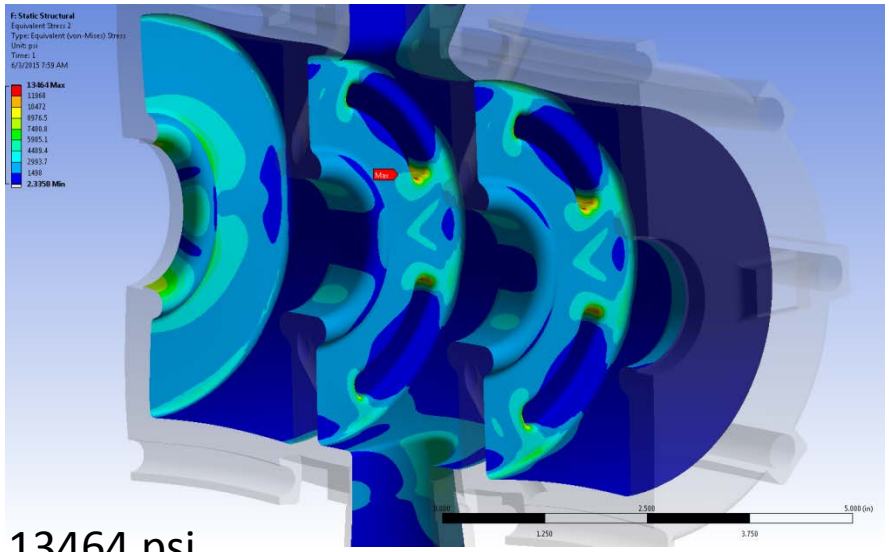

13464 psi

Body sizing: 0.001m

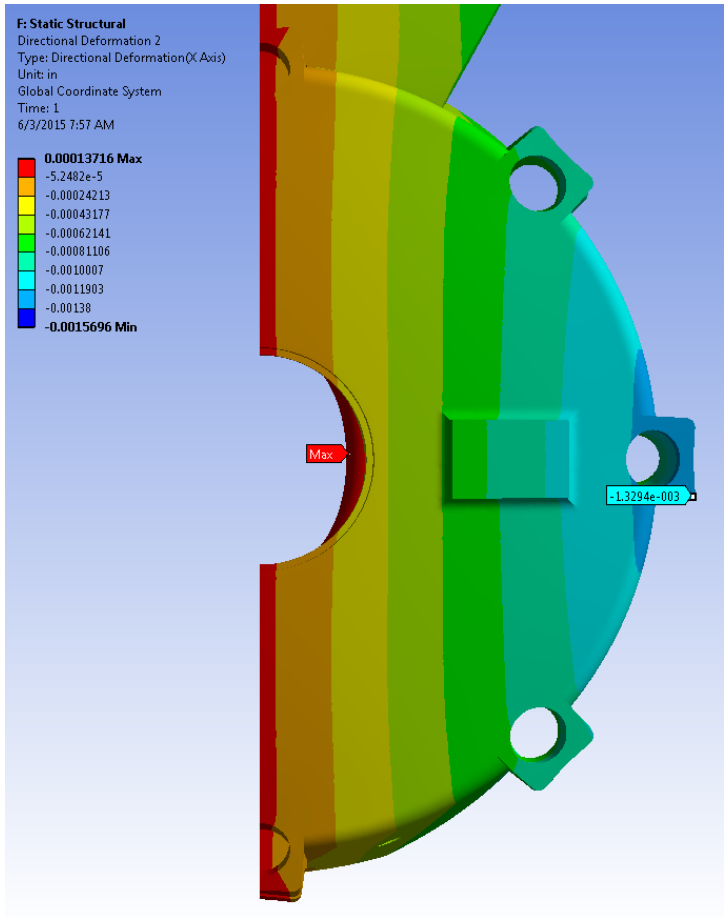

Radial thermal expansion: 0.00133”

Nose Cone and Coupling Slots Cooling

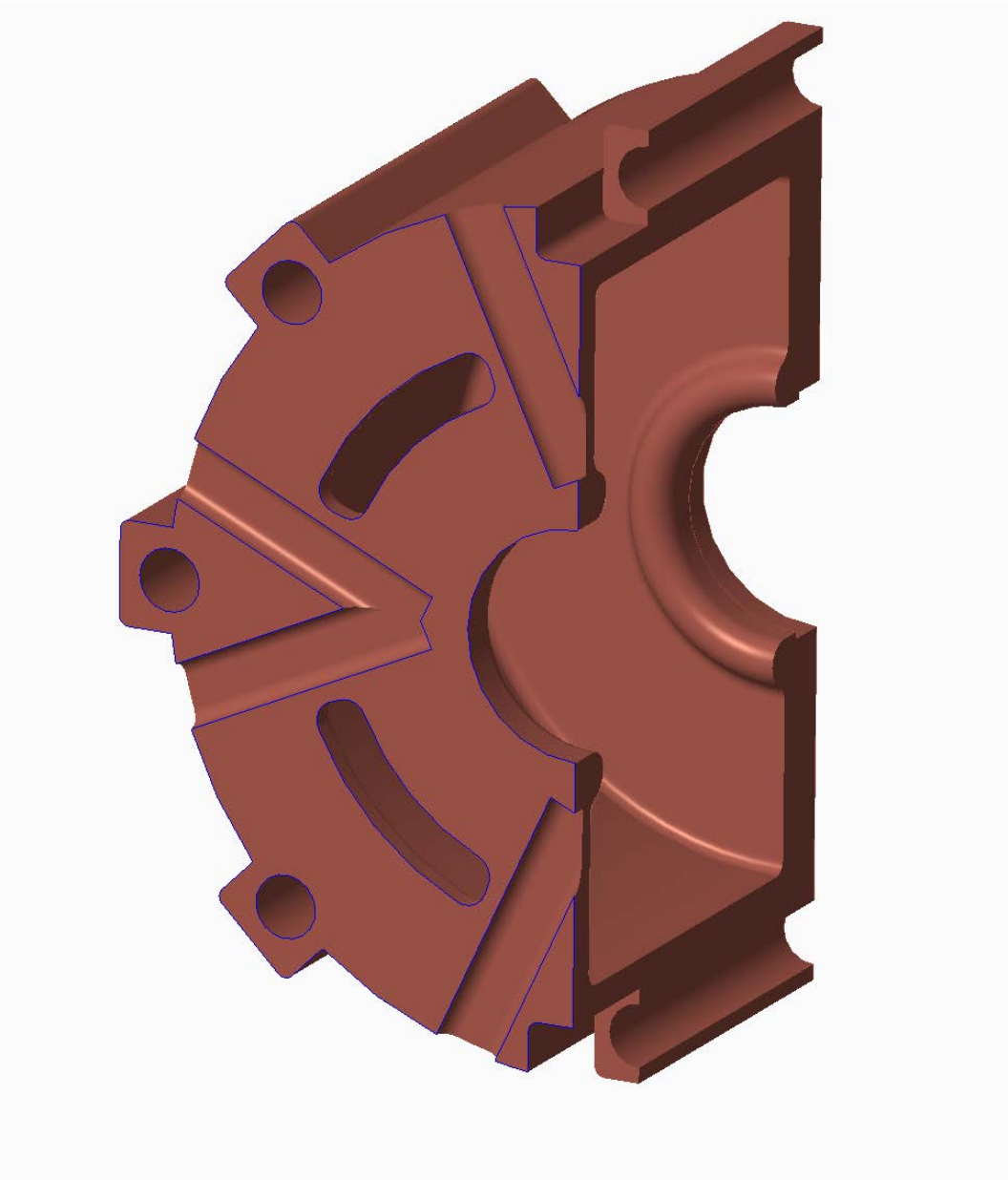

Table 1 - Maximum Recommended Water Velocities for Specific Materials

Water	
Low carbon steel	10 ft/sec
Stainless steel	15 ft/sec
Aluminum	6 ft/sec
Copper	8 ft/sec
90-10 Cupronickel	10 ft/sec
70-30 Cupronickel	15 ft/sec

250 KV

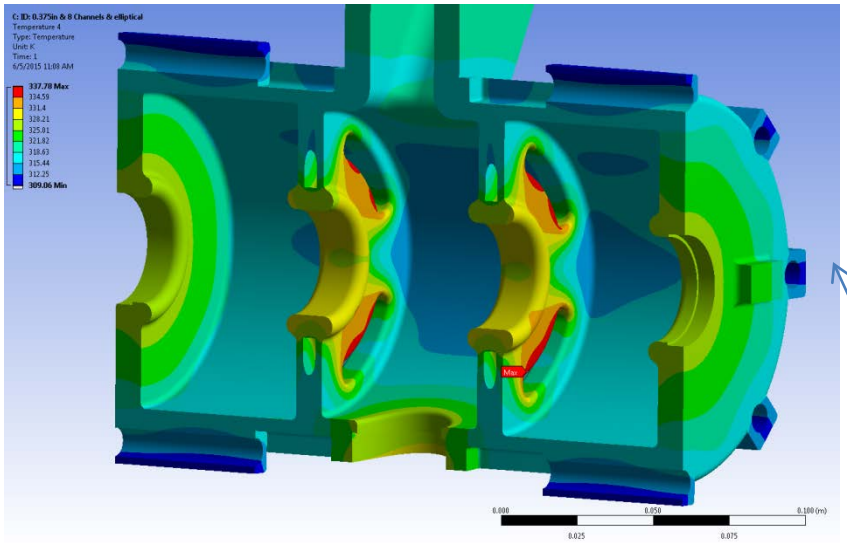

337.78 K

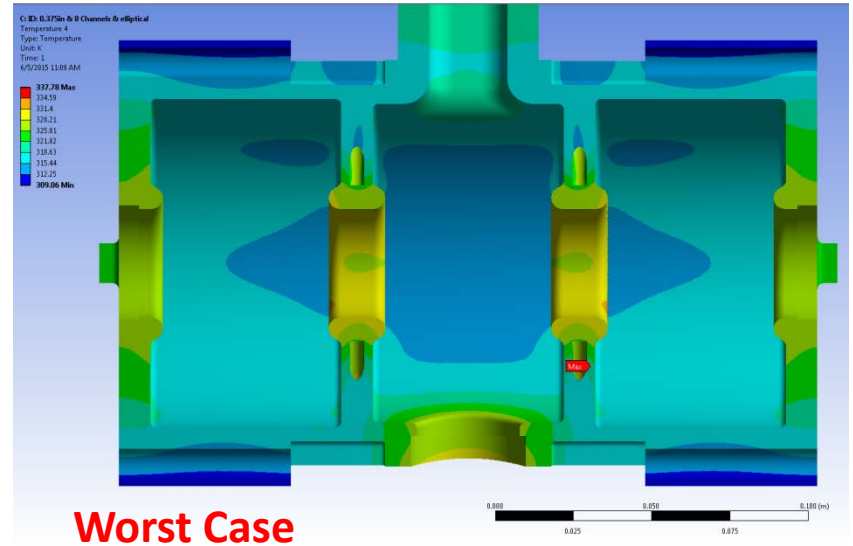

Worst Case

Water Ambient Temperature : 305.15 K

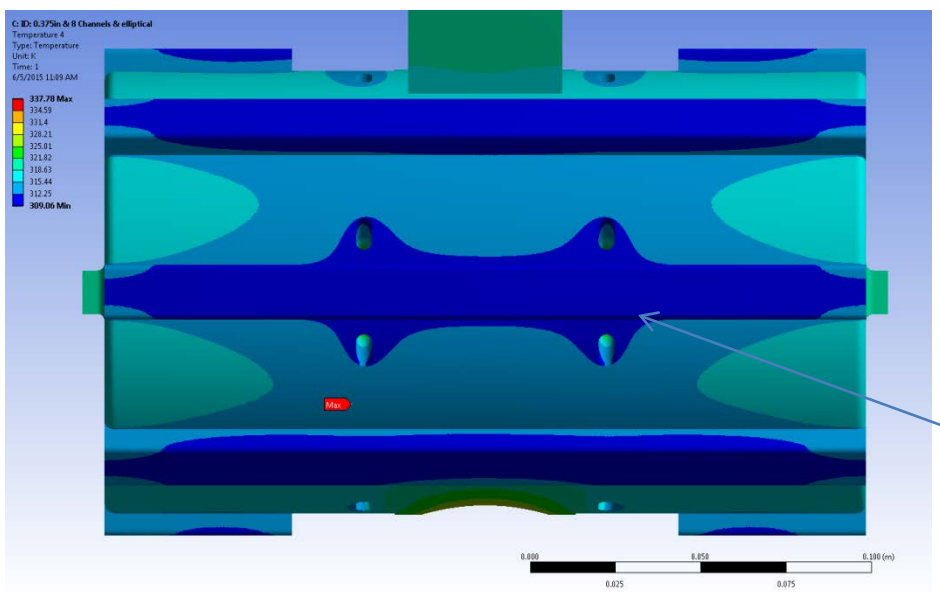

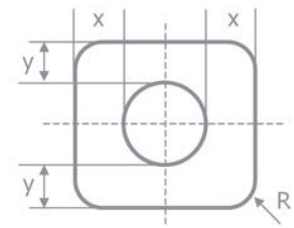

8494

OD	ID	x = y	R	
15.88	9.52	3.18	1.5	mm
0.625195	0.374802019	0.125196	0.059055	in
Flow		3		GPM
h			12131	W/m^2-K
Velocity			8.71	Ft/sec

h =	13430	W/m^2-K
Dh=	0.2604	in
Flow	1.5	GPM
Velocity	9.03	Ft/sc

250 KV

Without vacuum & displacement on one end

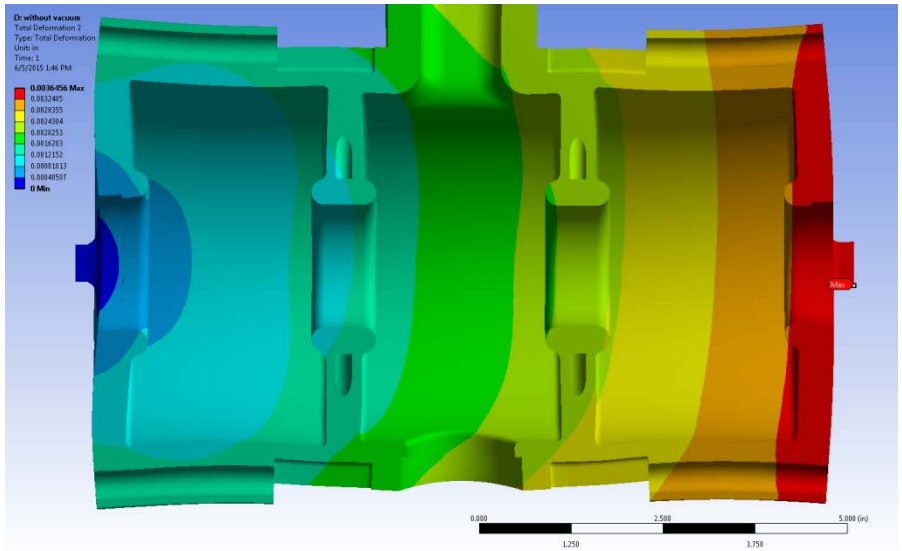

Axial thermal expansion: 0.0037”

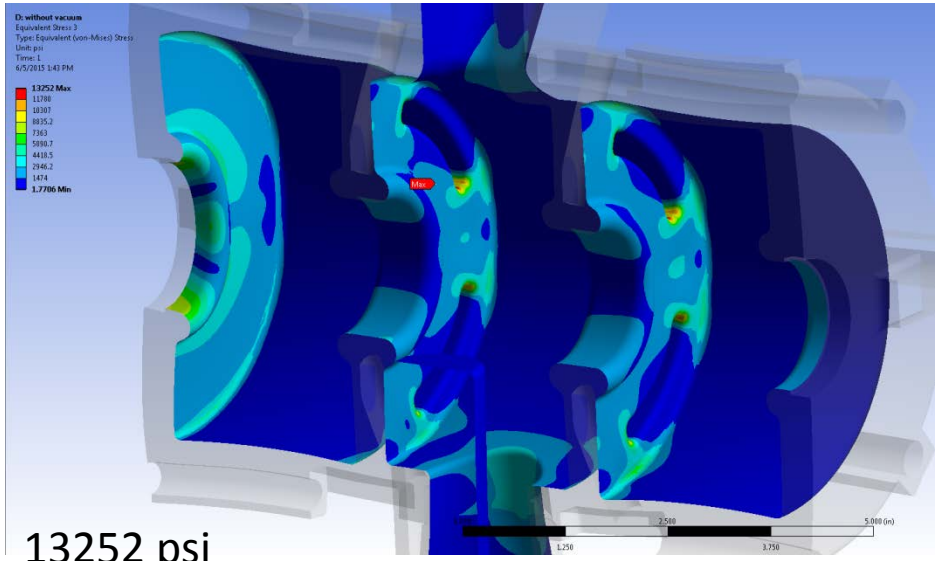

13252 psi

Coupling Slots Sizing: 0.0005m

Body sizing: 0.001m

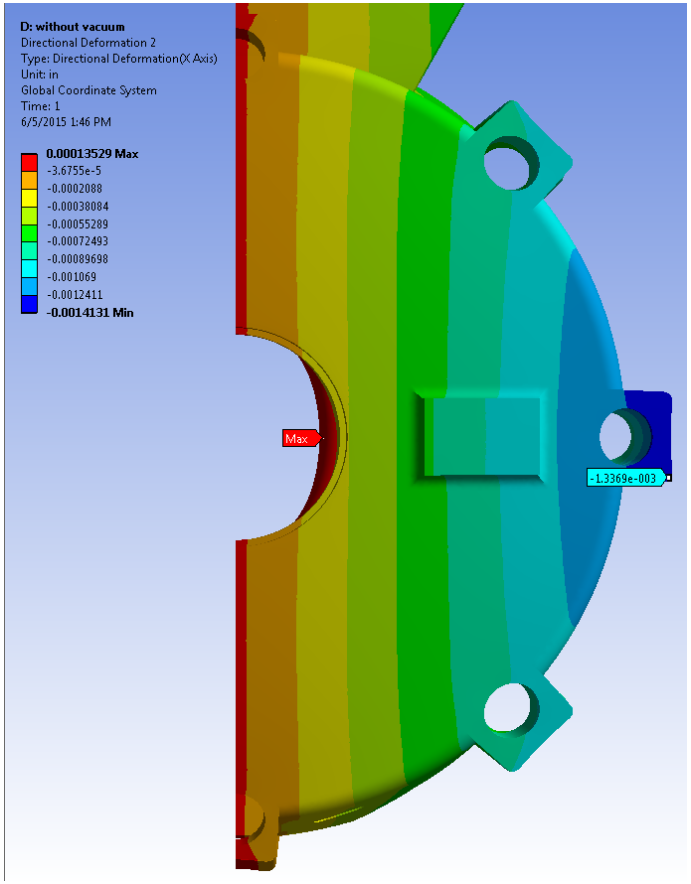

Radial thermal expansion: 0.0013”

Nose Cone and Coupling Slots Cooling

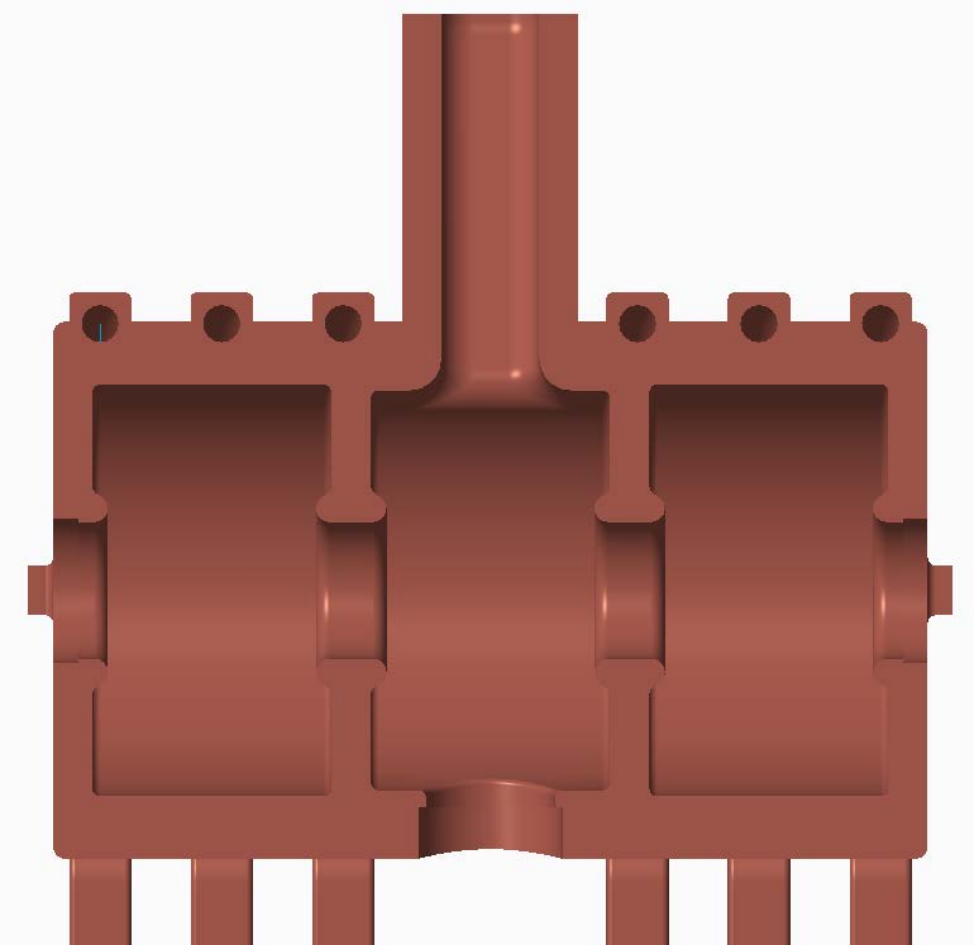

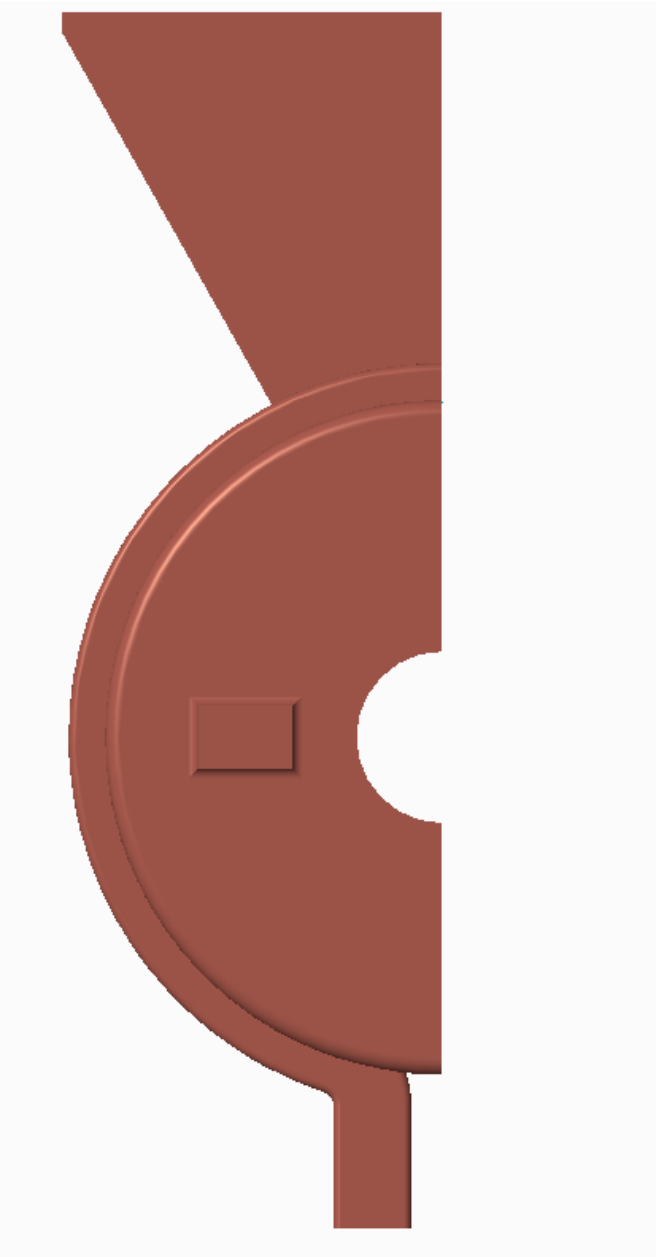

250 KV

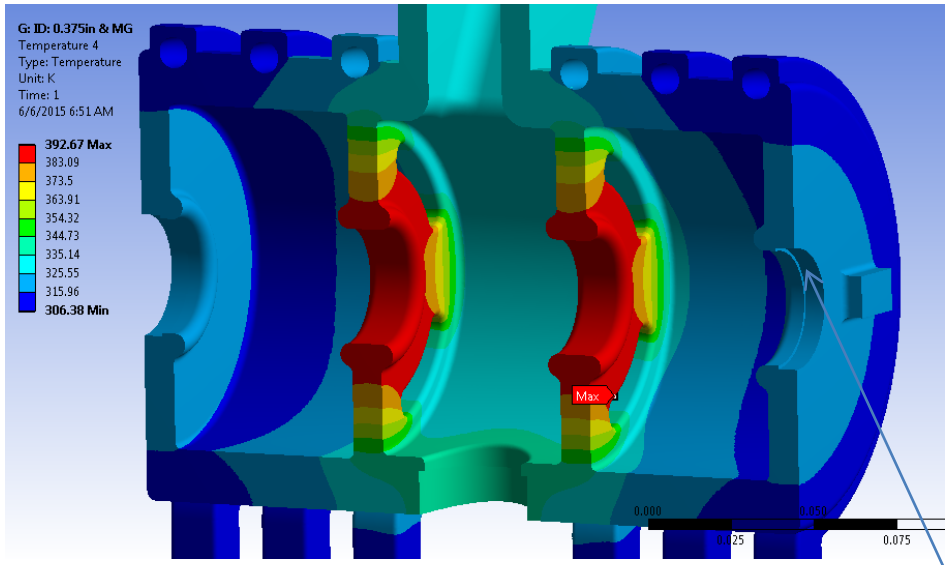

392.67 K

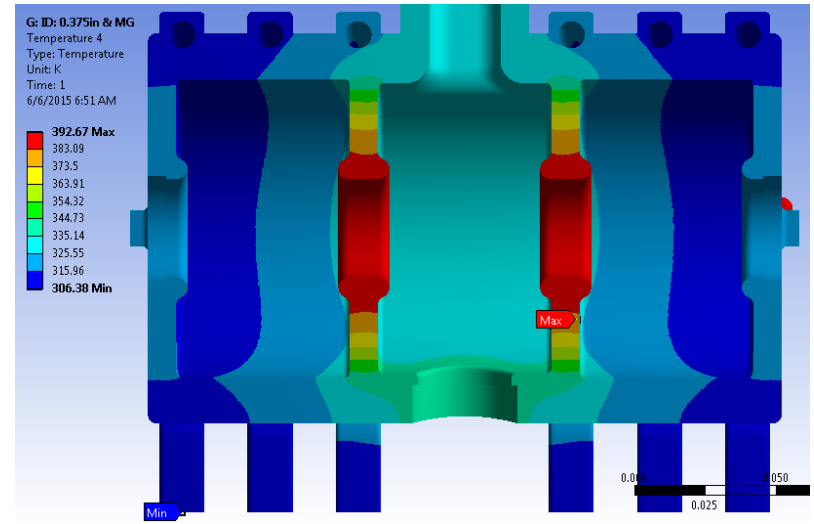

Worst Case

Water Ambient Temperature : 305.15 K

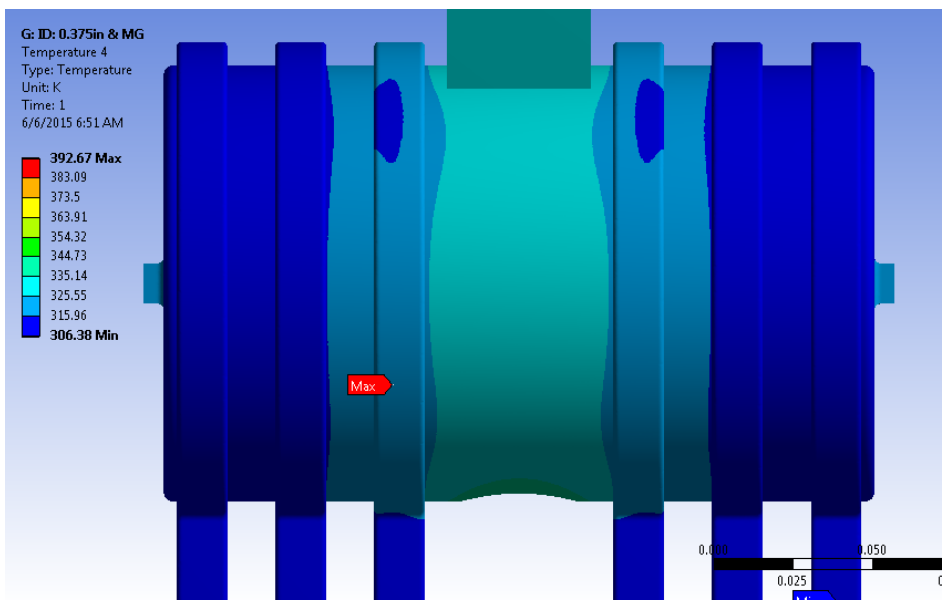

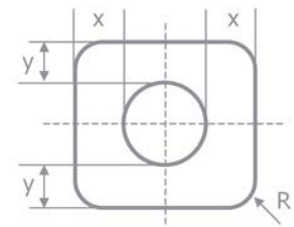

8494

OD	ID	x = y	R	
15.88	9.52	3.18	1.5	mm
0.625195	0.374802019	0.125196	0.059055	in
Flow		3		GPM
h			12131	W/m^2-K
Velocity			8.71	Ft/sec

250 KV

Without vacuum & displacement on one end

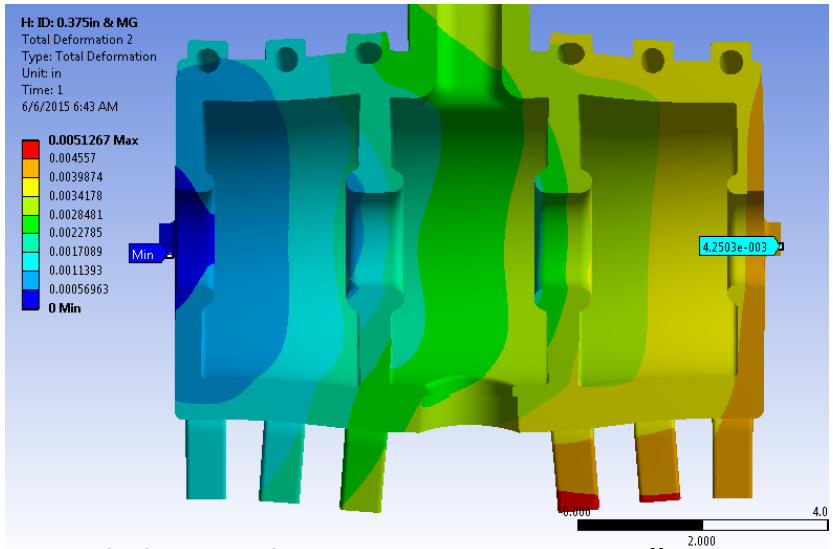

Axial thermal expansion: 0.0043”

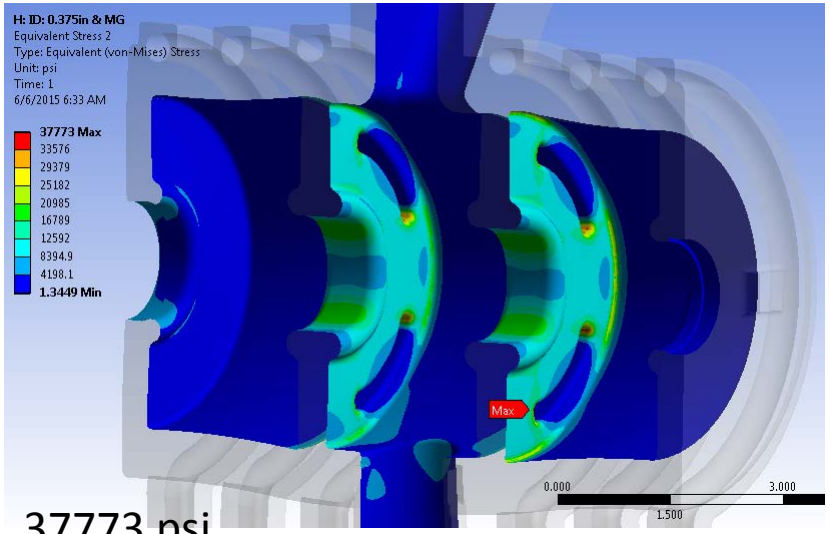

37773 psi

Coupling Slots Sizing: 0.0005m

Body sizing: 0.001m

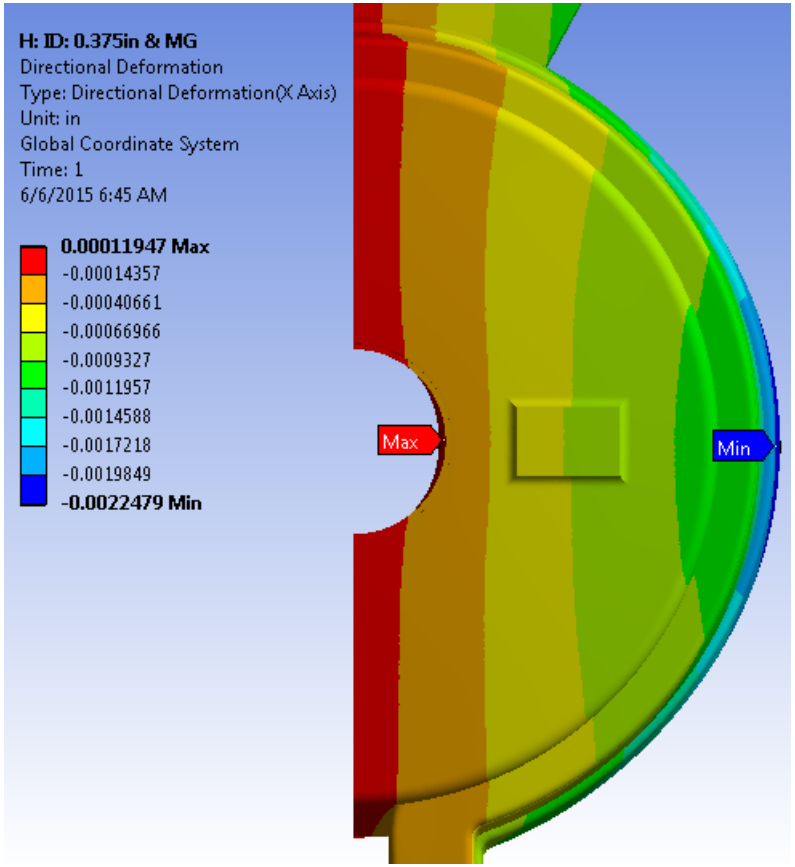

Radial thermal expansion: 0.0022”

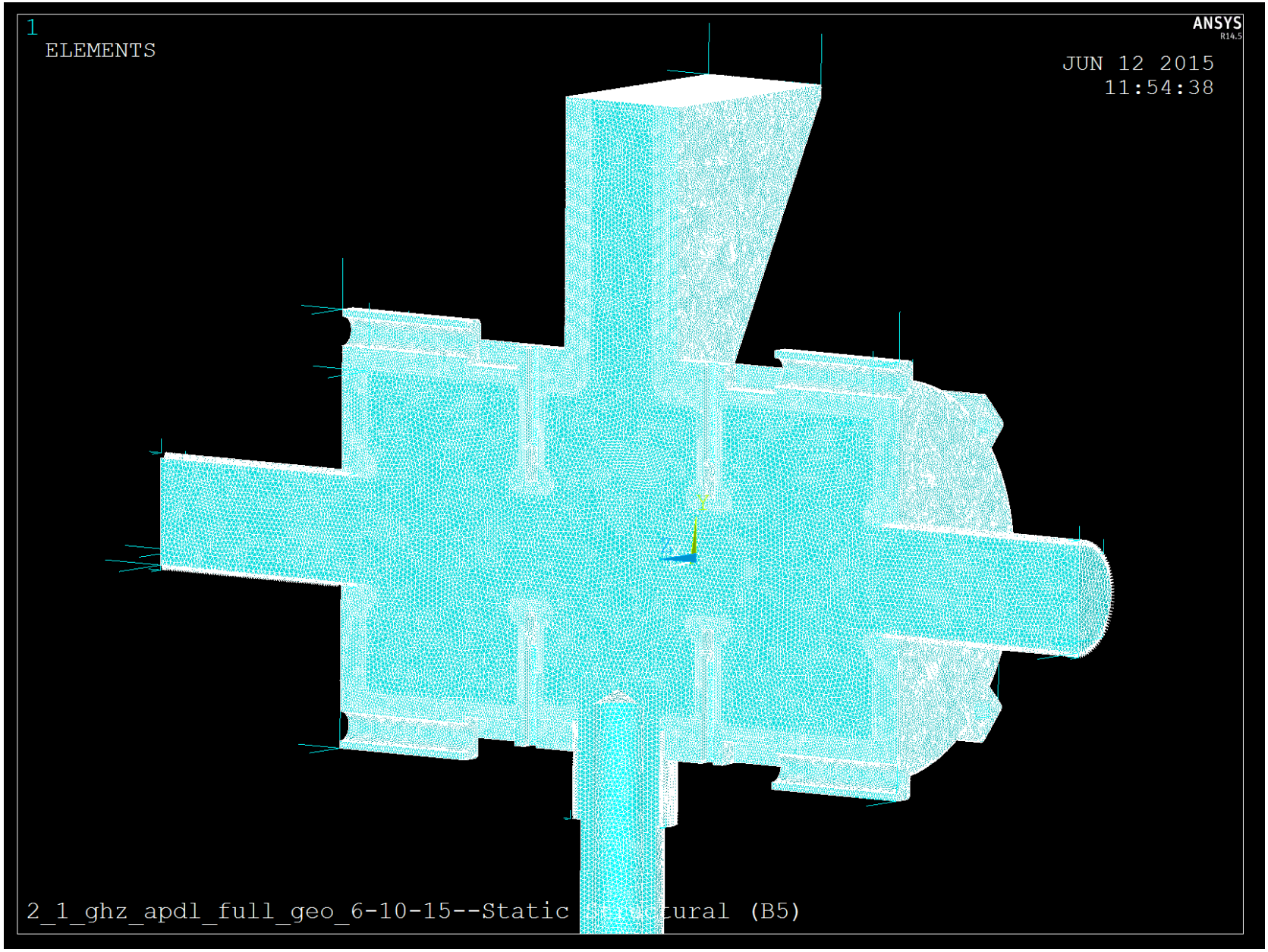
1
ELEMENTS
ANSYS
R14.5
JUN 12 2015
11:54:38
2_1_ghz_apdl_full_geo_6-10-15--Static Structural (B5)

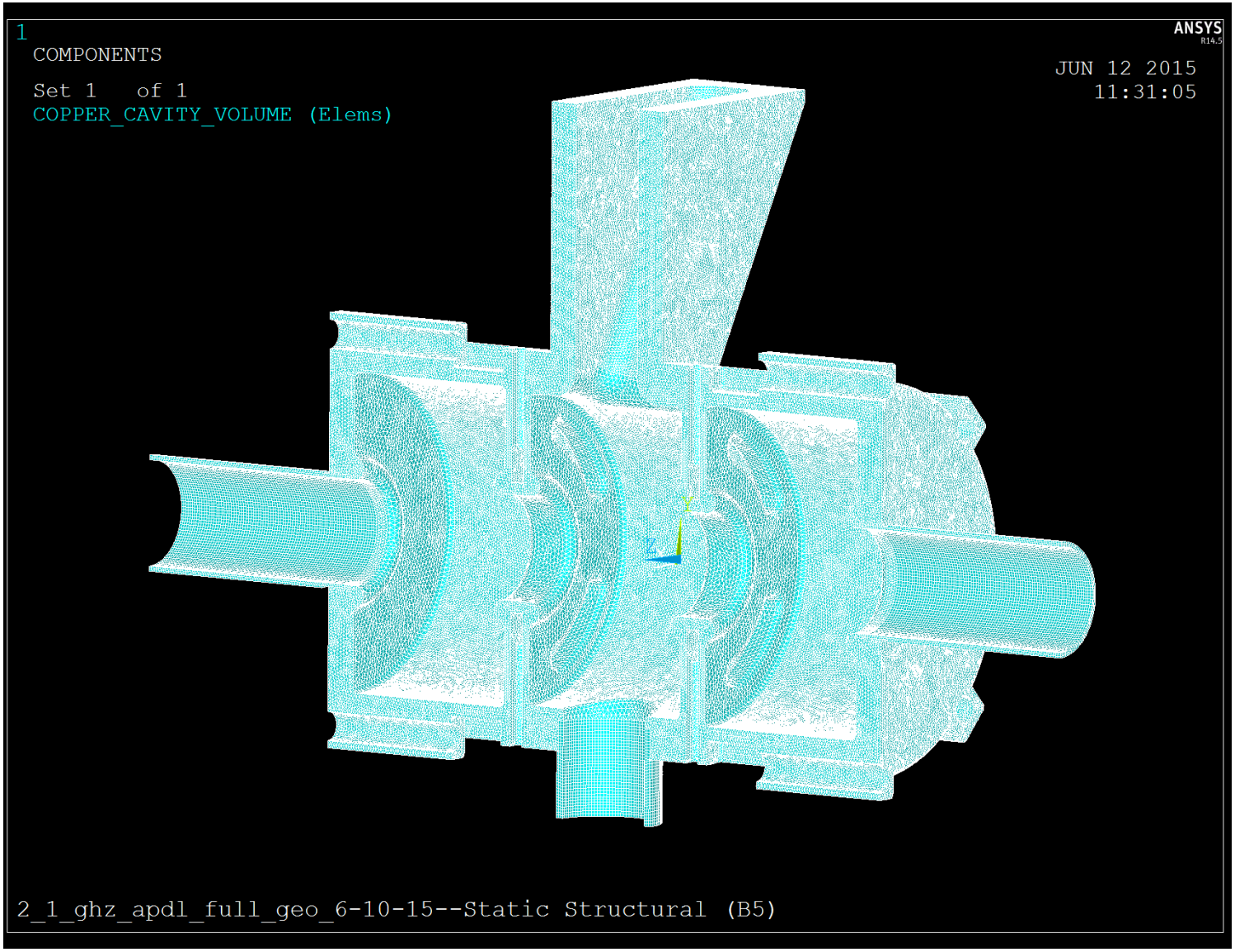
1
COMPONENTS
Set 1 of 1
COPPER_CAVITY_VOLUME (Elems)
ANSYS
R14.5
JUN 12 2015
11:31:05
2_1_ghz_apdl_full_geo_6-10-15--Static Structural (B5)

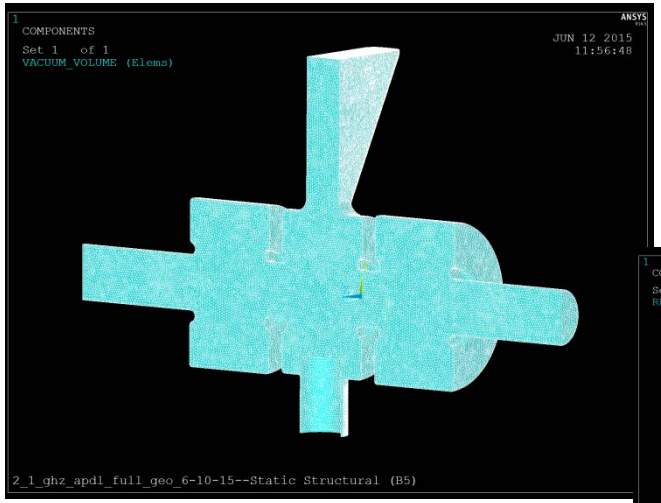
1
ANSYS
COMPONENTS
Set 1 of 1
VACUUM_VOLUME (Elems)
JUN 12 2015
11:56:48
2_1_ghz_apdl_full_geo_6-10-15--Static Structural (B5)

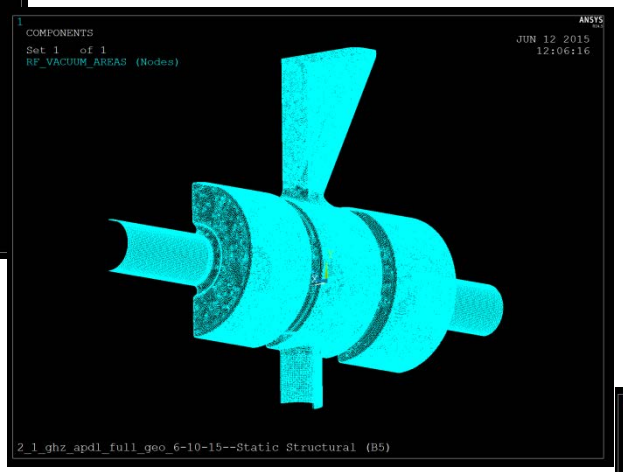
1
ANSYS
COMPONENTS
Set 1 of 1
RF_VACUUM_AREAS (Nodes)
JUN 12 2015
12:06:16
2_1_ghz_apdl_full_geo_6-10-15--Static Structural (B5)

Mechanical APDL 14.5 Output Window
ANSYS Multiphysics
***** ANSYS COMMAND LINE ARGUMENTS *****
INITIAL JOBNAME = 2_1_ghz_apdl_full_geo_6-10-15
START-UP FILE MODE = READ
STOP FILE MODE = READ
GRAPHICS DEVICE REQUESTED = win32
GRAPHICAL ENTRY = YES
LANGUAGE = en-us
INITIAL DIRECTORY = Y:\jcbrutus\"_ WORK _"\ANSYS\2_1 GHz 3-Cell\Fully Inserted Tuner 250kV 6-1-15\APDL
00331714 VERSION=WINDOWS x64 RELEASE= 14.5 UP20120918
CURRENT JOBNAME=2_1_ghz_apdl_full_geo_6-10-15 12:25:59 JUN 12, 2015 CP= 0.827
/SHOW SET WITH DRIVER NAME= WIN32 . RASTER MODE. GRAPHIC PLANES = 0
RUN SETUP PROCEDURE FROM FILE= C:\Program Files\ANSYS Inc\v145\ANSYS\apdl\start145.ans
/INPUT FILE= menust.tmp LINE= 0
/INPUT FILE= C:\Program Files\ANSYS Inc\v145\ANSYS\apdl\start145.ans LINE= 0
ACTIVATING THE GRAPHICAL USER INTERFACE (GUI). PLEASE WAIT...
CUTTING PLANE SET TO THE WORKING PLANE
PRODUCE NODAL PLOT IN DSYS= 0
TURN OFF WORKING PLANE DISPLAY
RESUME ANSYS DATA FROM FILE NAME=2_1_ghz_apdl_full_geo_6-10-15.db
*** NOTE *** CP = 2.527 TIME= 12:26:11
The initial memory allocation (-m) has been exceeded.
Supplemental memory allocations are being used.
Memory resident data base increased from 512 MB to 1024 MB.
Memory resident data base increased from 1024 MB to 2048 MB.
Memory resident data base increased from 2048 MB to 4096 MB.
Memory resident data base increased from 4096 MB to 8192 MB.
Memory resident data base increased from 8192 MB to 16384 MB.
*** ANSYS GLOBAL STATUS ***
TITLE = 2_1_ghz_apdl_full_geo_6-10-15--Static Structural (B5)
ANALYSIS TYPE = MODAL
NUMBER OF ELEMENT TYPES = 3
2611713 ELEMENTS CURRENTLY SELECTED. MAX ELEMENT NUMBER = 9860229
248600 NODES CURRENTLY SELECTED. MAX NODE NUMBER = 13575507
12 COMPONENTS CURRENTLY DEFINED
MAXIMUM LINEAR PROPERTY NUMBER = 11
MAXIMUM REAL CONSTANT SET NUMBER = 15
ACTIVE COORDINATE SYSTEM = 0 (CARTESIAN)
NUMBER OF SPECIFIED CONSTRAINTS = 248600
INITIAL JOBNAME = 2_1_ghz_apdl_full_geo_6-10-15
CURRENT JOBNAME = 2_1_ghz_apdl_full_geo_6-10-15
PRODUCE ELEMENT PLOT IN DSYS = 0

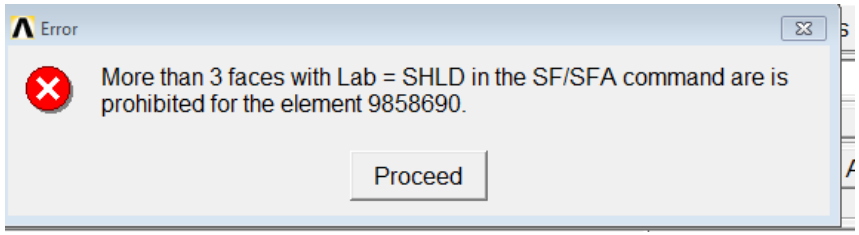
Error
More than 3 faces with Lab = SHLD in the SF/SFA command are is prohibited for the element 9858690.
Proceed

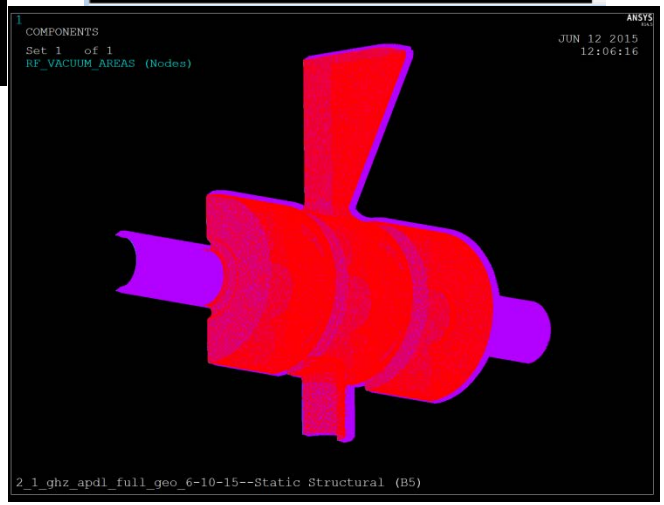
1
ANSYS
COMPONENTS
Set 1 of 1
RF_VACUUM_AREAS (Nodes)
JUN 12 2015
12:06:16
2_1_ghz_apdl_full_geo_6-10-15--Static Structural (B5)