Meeting Minutes

Minutes: October 29, 2015

LEReC Accelerator Section Integration

- DC Gun and cathode insertion mechanism
- DC Gun to Booster Transport Line
- Cathode laser transport and in tunnel optics table
- Booster cavity upstream end modification/interface
- Booster cavity cryogenic supply and return lines
- Booster cavity wave guides
- Booster cavity downstream end (HOM damper) modification/interface
- 2.1 GHz cavity installation, vacuum transitions, wave guide position

A. Arno, S. Bellavia, J.C. Brutus, M. Grau, J. Halinski, D. Kayran, G. Mahler, G. McIntyre, R. Meier, S. Nayak, A. Zaltsman, C. Pai, L. Snydstrup, V. Soria, Z. Zhao, Fedotov, W. Fischer, M. Blaskiewicz, B. Xiao, B. Sheehy, K. Smith, W. Xu

The goal of this project is to install the DC Gun during the 2016 shutdown and commission it with beam during run 17 (2017).

The DC Gun construction is on schedule and the gun should be delivered before September 2016.

In order to test the gun with beam the DC gun to booster transport line components and the laser transport system will need to be designed, fabricated, and installed by January 2017.

Meeting Minutes

Minutes: October 10, 2015

The most spirited discussion was on the location of the 2.1 GHz cavity which is downstream of the SCRF booster cavity. The beamline adapter modification for the SCRF booster cavity is under design and may include an HOM. This plus a beamline aperture transition and a bellows will move the 2.1 GHz cavity farther downstream. The sizes of these components are TBD. M. Grau will do a preliminary layout of the 2.1 GHz with these components. K. Smith is working with S. Seberg on the SCRF booster cavity adapter. At the same time D. Kayran and J. Kewisch should look at the acceptable distance and consider adding a solenoid magnet over the bellows and transition between the SCRF booster cavity and the 2.1 GHz cavity.

It was noted that the space for the laser optics table is constrained by the SCRF booster cavity cryostat. Also the laser transport line from the laser building to the laser optics table will have to be in vacuum not fiber optic cable.

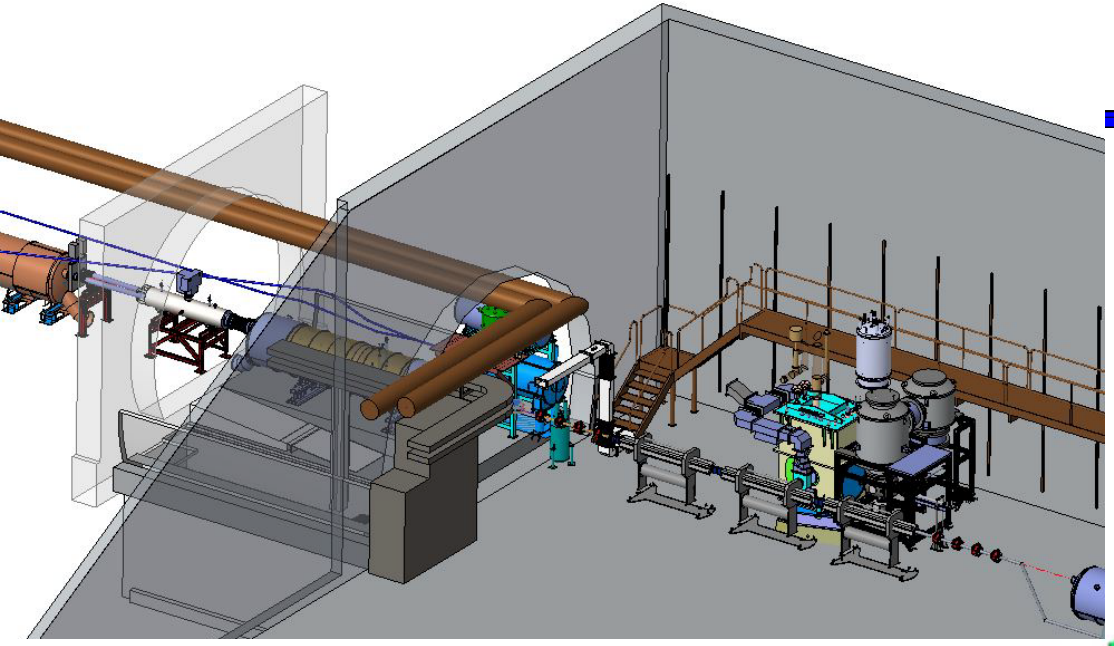

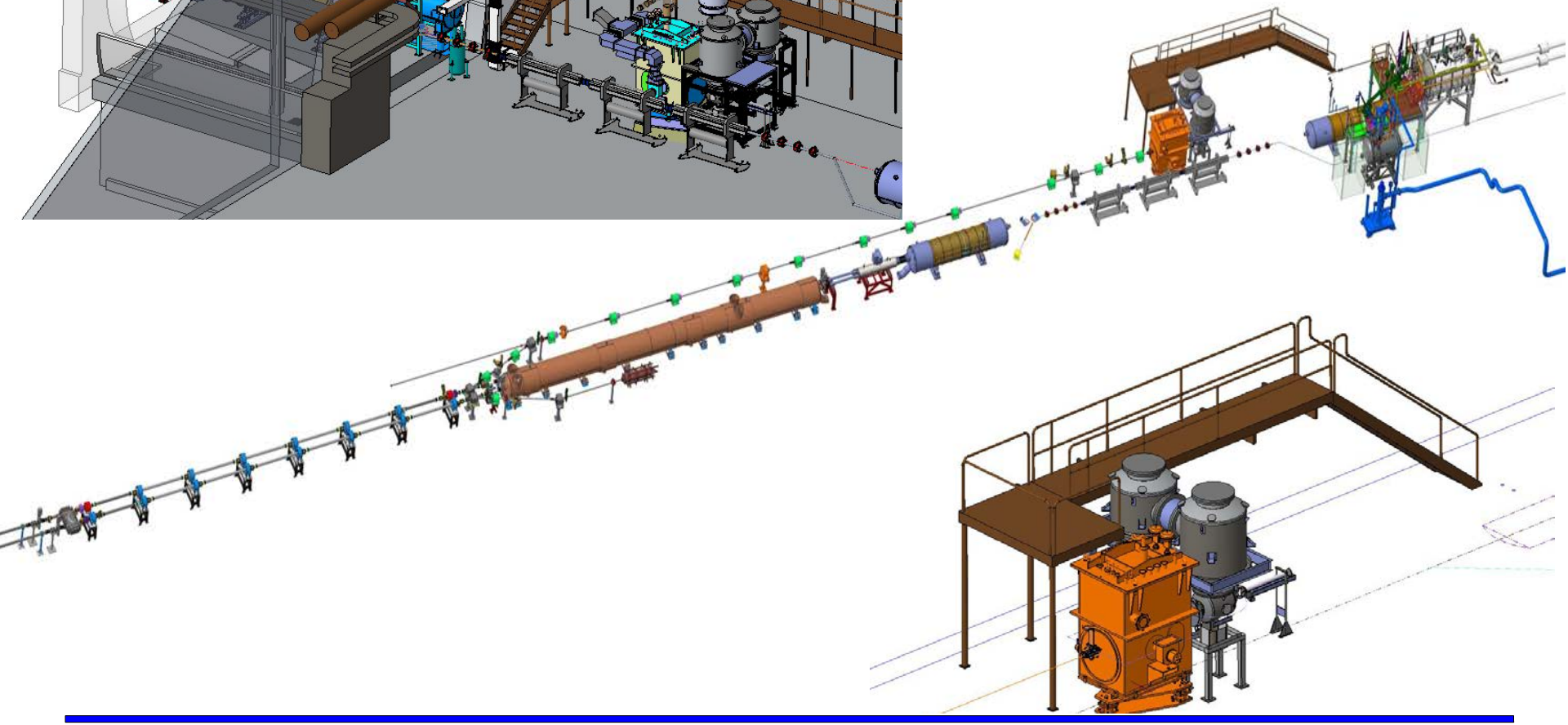

Commission in during 2017 run

- DC Gun and cathode insertion mechanism. Liaw, Halinski
- (Cathode production system) Rao, Liaw, Brutus, Hamdi
- DC Gun to Booster Transport Line. Nayak, Halinski
- Cathode laser transport and in tunnel optics table. Zhao, Bellavia,
- Booster cavity upstream end modification/interface. McIntyre, Seberg
- Booster cavity cryogenic supply and return lines. Orfin, Soria, Meier
- Booster cavity wave guides. Brutus,
- Booster cavity downstream end (HOM damper) modification/interface. McIntyre, Seberg
- 2.1 GHz cavity installation, vacuum transitions, wave guide position Brutus, Grau
- Cable tray, power (DC Gun, cryogenic heaters), water. Phillips

LEReC (1.6-2MeV): Gun to Dump

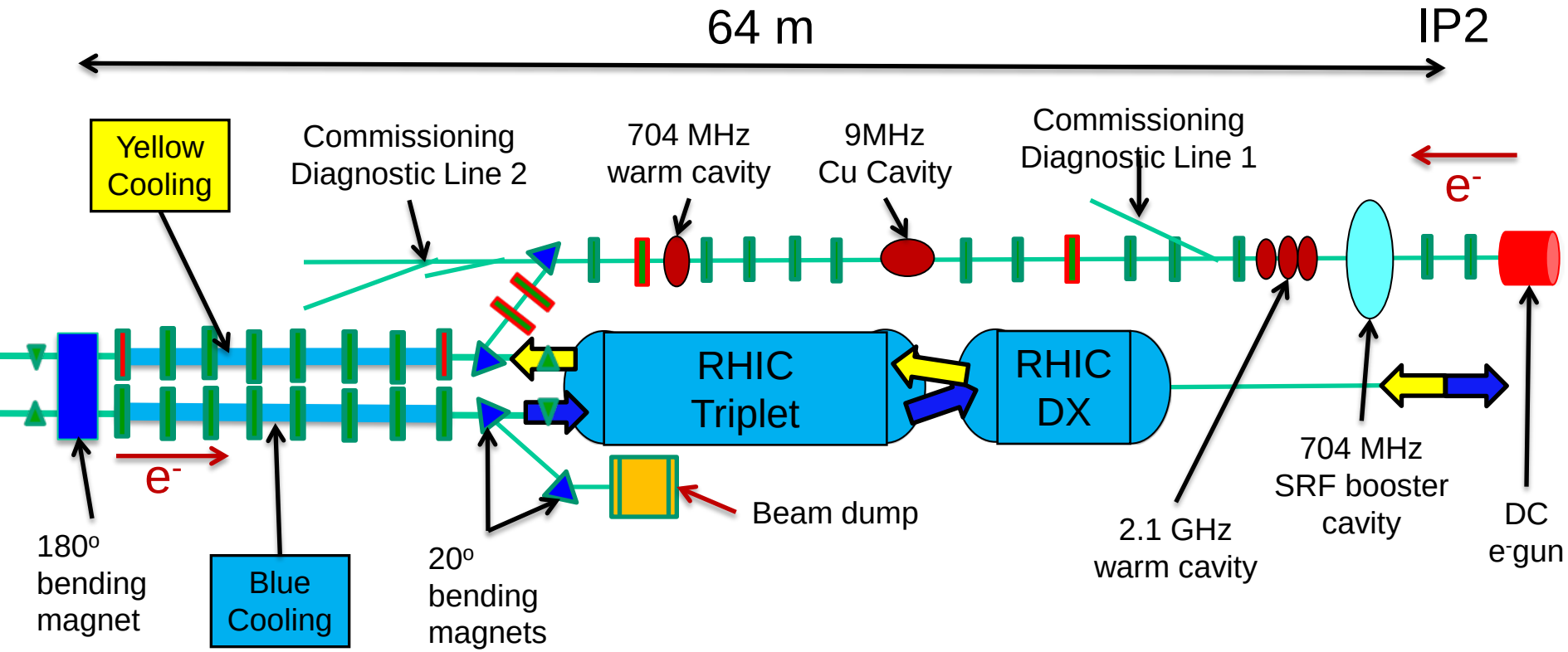

LEReC layout

64 m to IP2

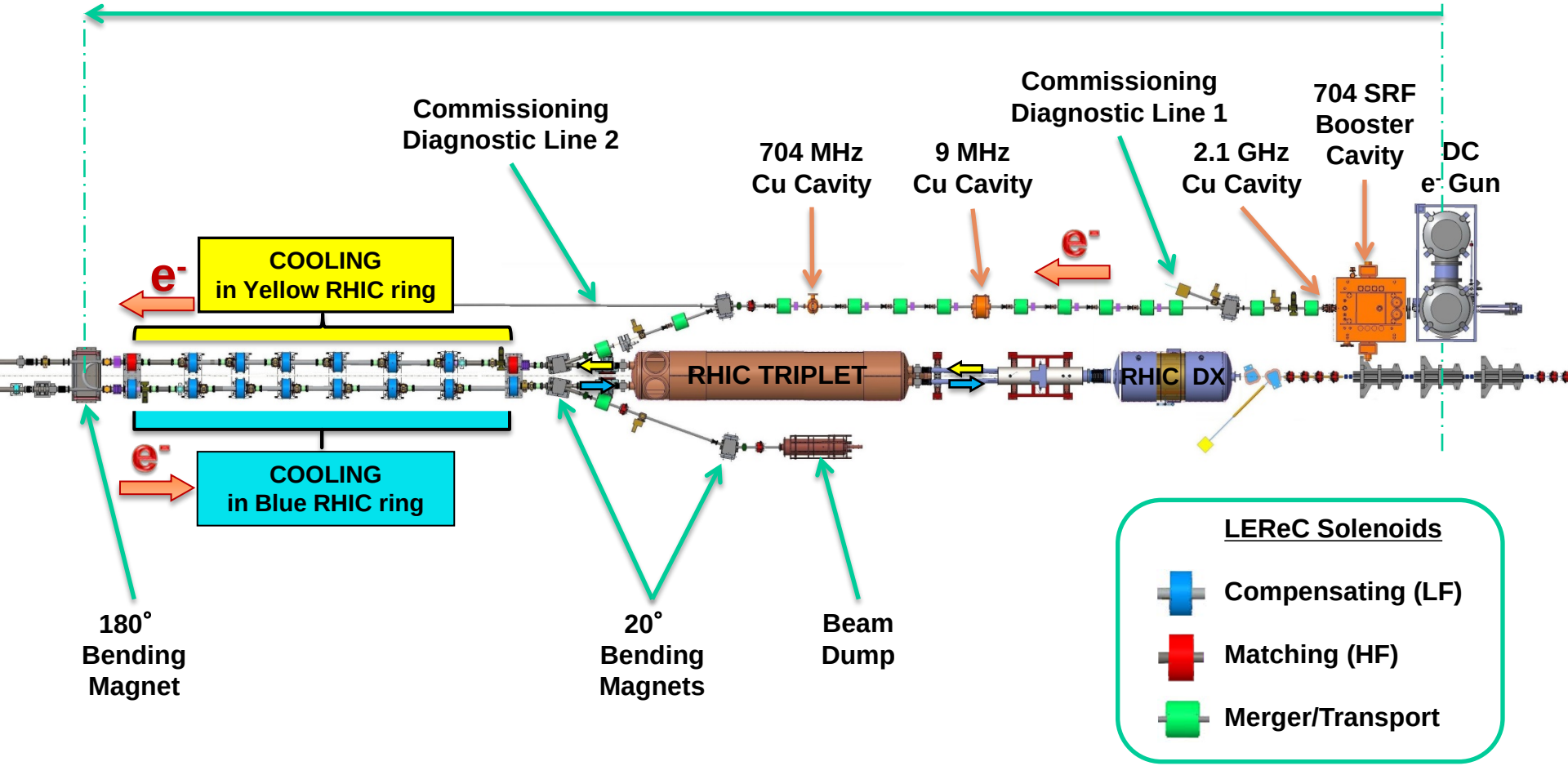

electron Gun to RHIC transport line system

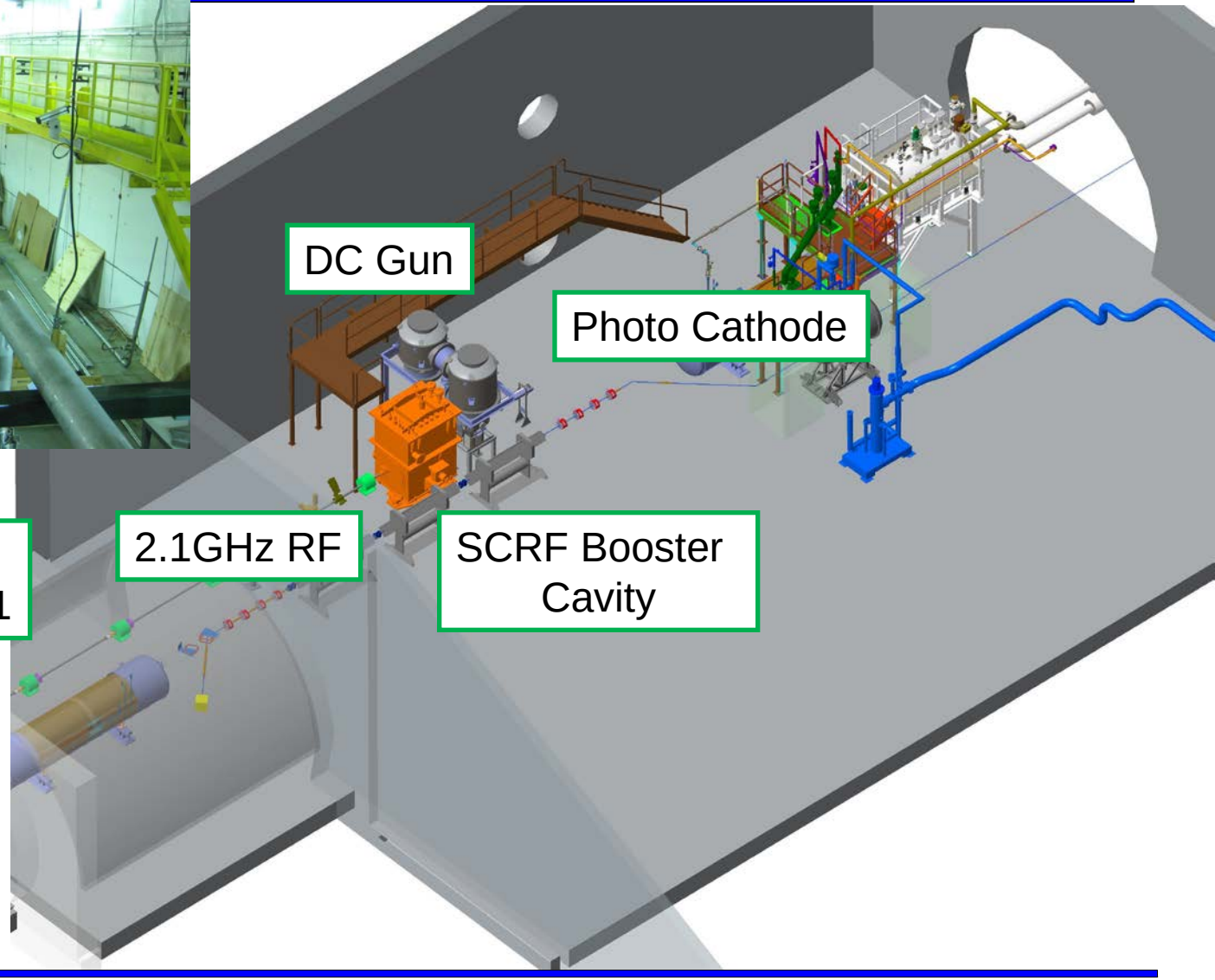

Cryogenic Component and Transfer Line Layout

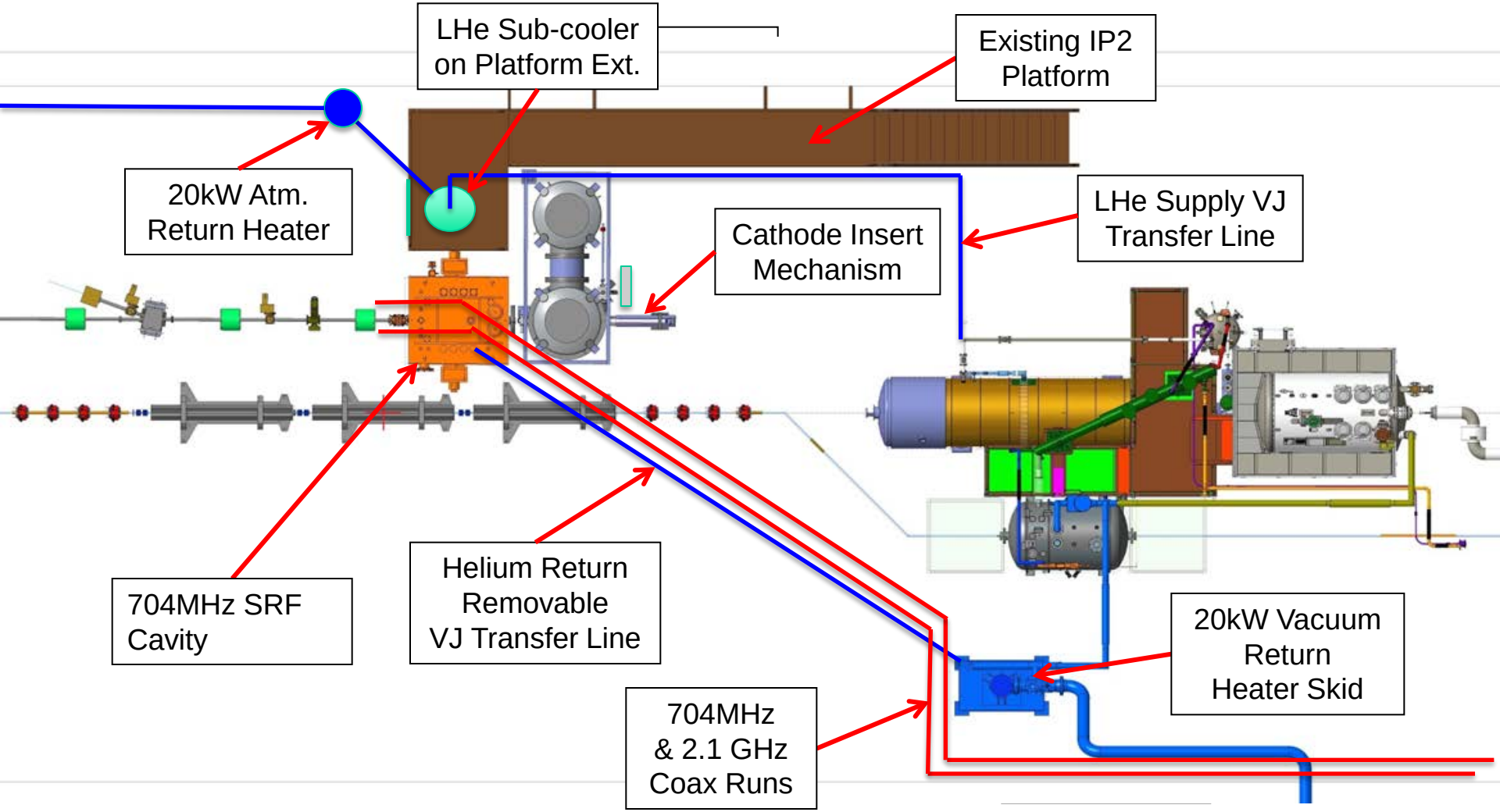

BROOKHAVEN NATIONAL LABORATORY

Updated: October 19,2015

DC Gun

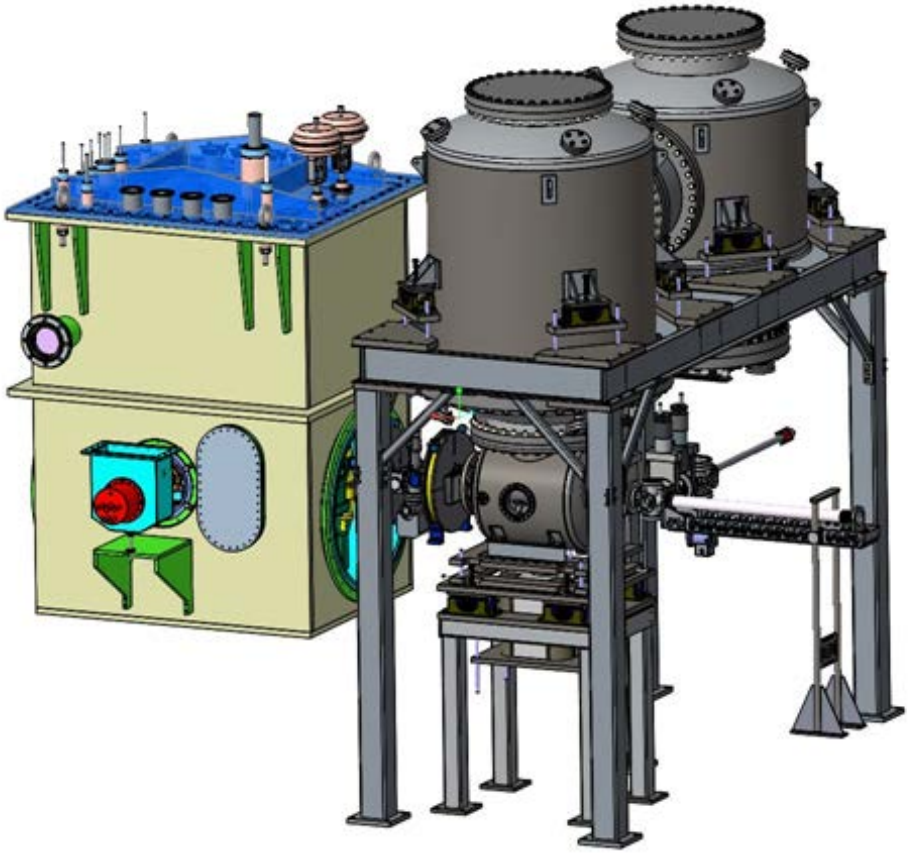

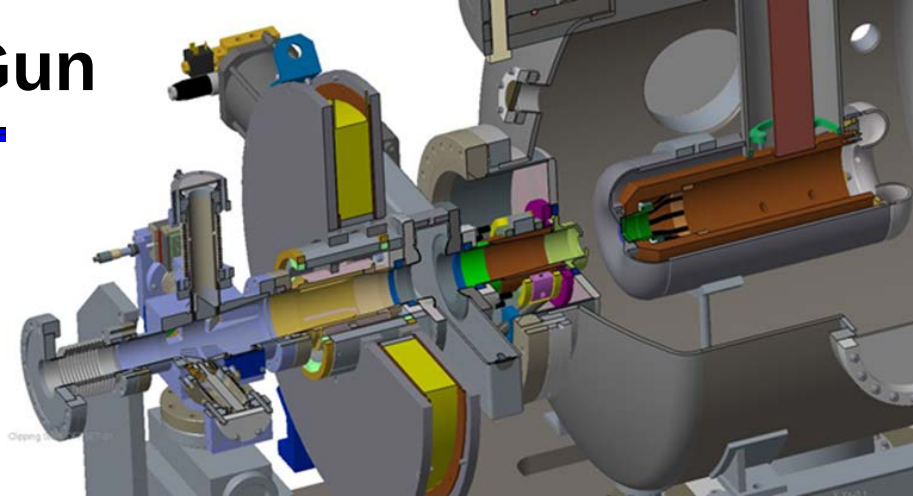

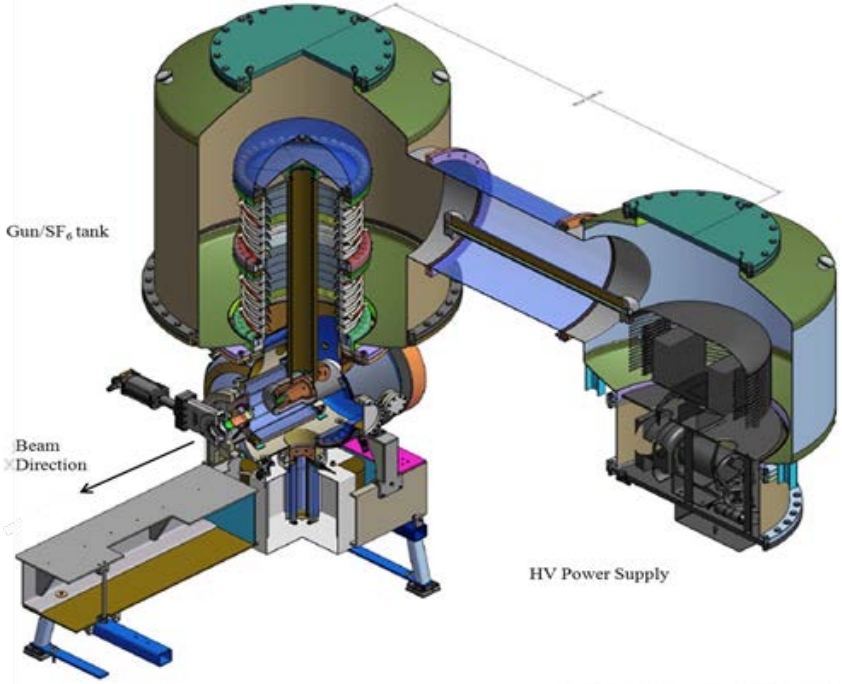

Booster Cavity and Transport Line (operations)

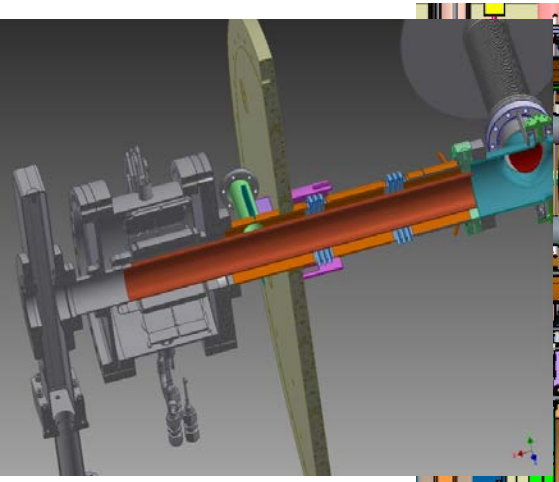

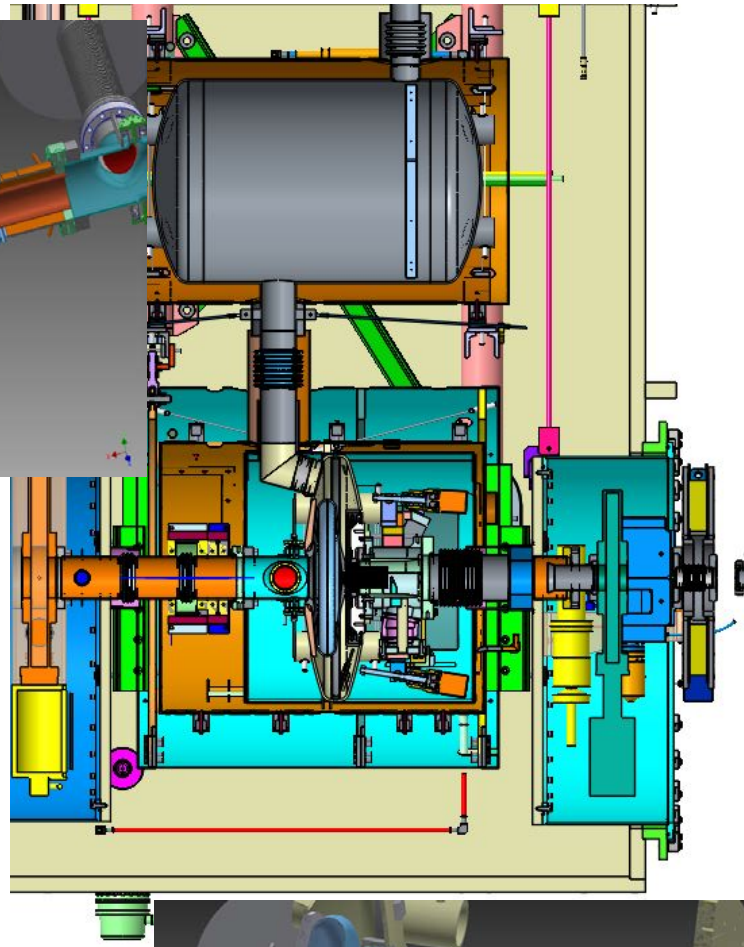

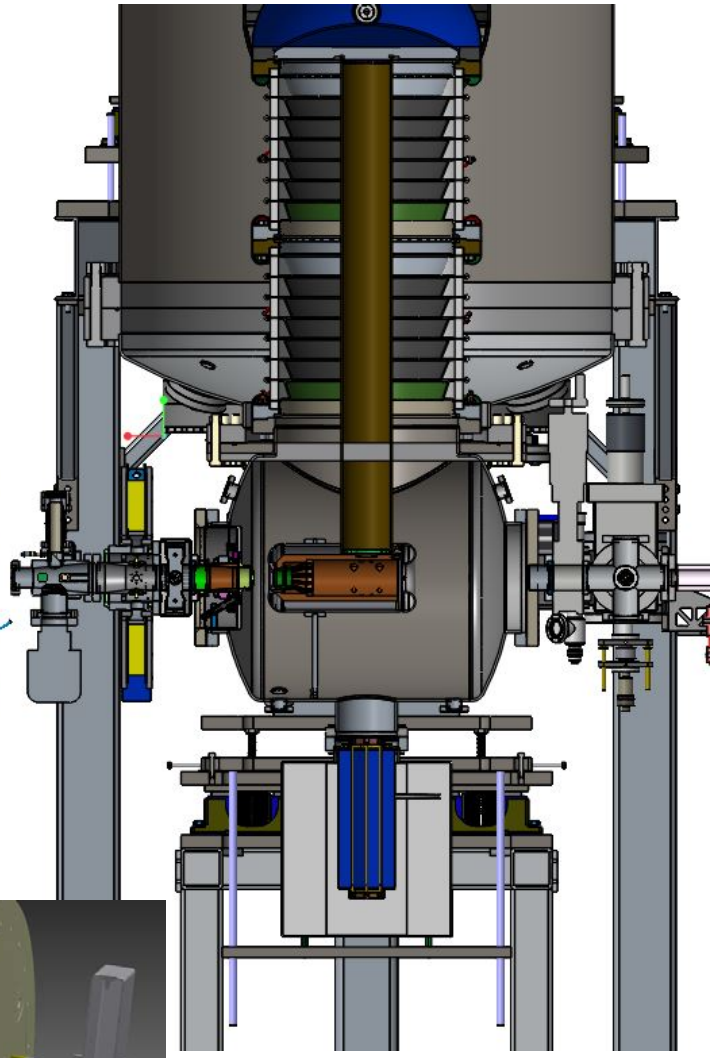

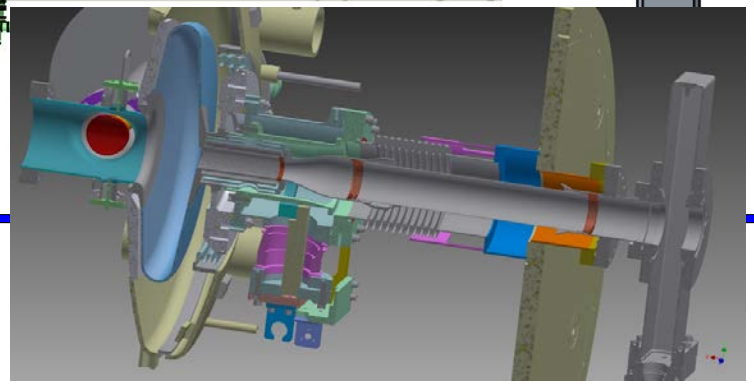

2.1 MHz Copper RF Cavity

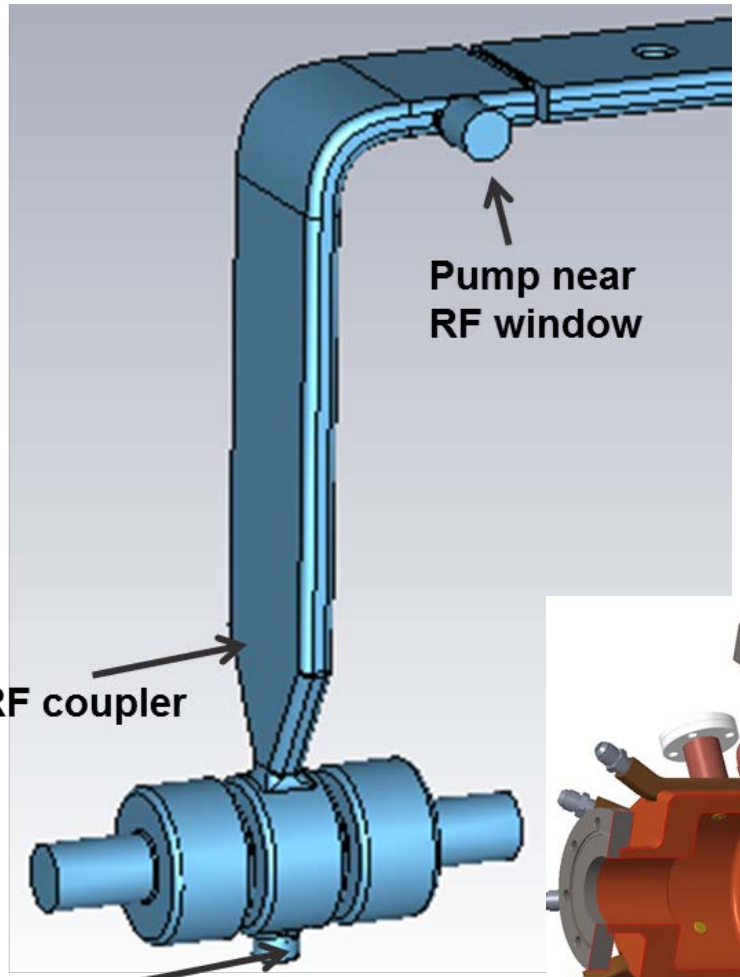

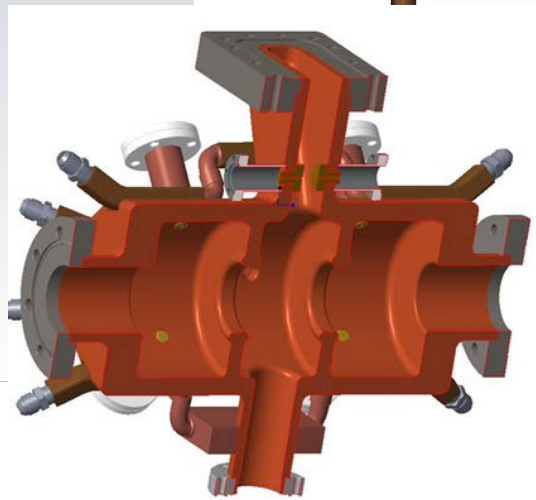

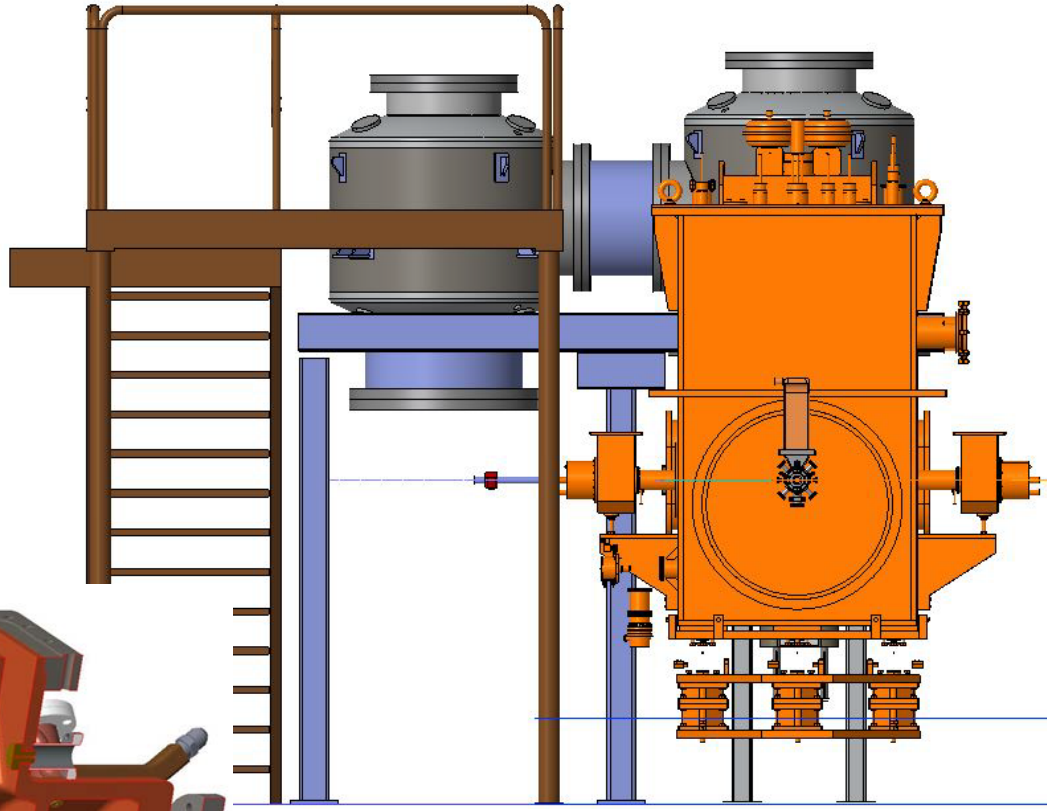

LEReC Design Room Source Design Work

- ✓ ***DC Gun Vacuum Chamber Fabrication Drawings (JH)***
- ✓ ***DC Gun SF6 Pressure chamber specification control drawings (JH)***
- ✓ ***DC Gun cathode cooling design for Karl S. Cornell (JH)***
- ✓ ***DC Gun stands (JH)***

DC Gun to SRF booster cavity beam line (JH)

DC Gun to SRF booster cavity laser port, view port, profile monitor (JH)

DC Gun to SRF booster cavity solenoid/H,V,Q,SK corrector magnets

DC Gun to SRF booster cavity BPM's

DC Gun cathode insertion drive assembly (VDM)

ERL Gun to Booster Cavity Modifications: U/S cathode to beam tube, FPC, D/S beamline & HOM (SS, JH)

Booster cavity cryogenic installation (RM)

Laser transport line
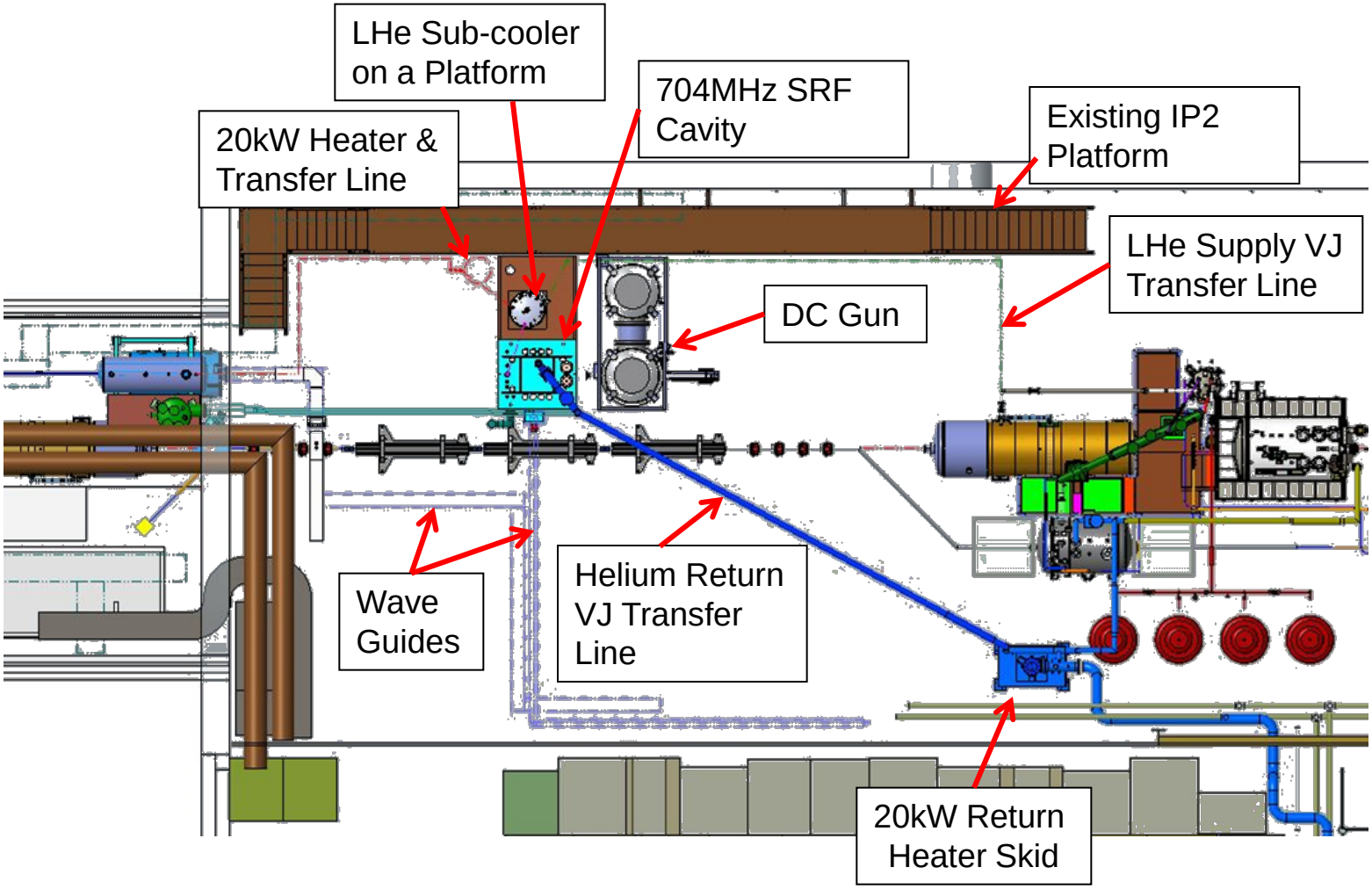
Cryogenic Component and Transfer Line Layout